CIP PROJECT NO. 7265.004
IFB NO. TBD
WILD HORSE RANCH WWTP EXPANSION

VOLUME 1 OF 2

CONFORMED DOCUMENTS

NOVEMBER 2022

THIS CONFORMED DOCUMENT IS RELEASED FOR THE CONVENIENCE OF THE CONTRACTOR UNDER THE AUTHORITY OF:

11-01-22

DANNY M HURTADO, P.E. — DATE
TX LIC NO. 104266

SEE DISCLAIMER FOR LIMITATIONS OF USE.

CONTRACT DOCUMENTS DATED JUNE 10, 2022, AS PART OF THE BIDDING DOCUMENTS (DRAWINGS AND SPECIFICATIONS) AND SUBSEQUENTLY ISSUED ADDENDA HAVE BEEN MERGED INTO ONE CONFORMING SET OF DOCUMENTS FOR THE CONVENIENCE OF THE CONTRACTOR. IF INCONSISTENCIES OR AMBIGUITIES BETWEEN "CONFORMED" DOCUMENTS AND CONTRACT DOCUMENTS ARE FOUND, THE CONTRACT DOCUMENTS SHALL GOVERN.

MAYOR

STEVE ADLER

COUNCIL MEMBERS

MAYOR PRO TEM - DELIA GARZA

DISTRICT 1 - NATASHA HARPER-MADISON
DISTRICT 2 - VANESSA FUENTES
DISTRICT 3 - SABINO RENTERIA
DISTRICT 4 - JOSE VELA
DISTRICT 5 - ANN KITCHEN
DISTRICT 6 - MACKENZIE KELLY
DISTRICT 7 - LESLIE POOL
DISTRICT 8 - PAIGE ELLIS
DISTRICT 9 - KATHIE TOVO
DISTRICT 10 - ALISON ALTER

CITY MANAGER

SPENCER CRONK

AUSTIN WATER DIRECTOR

GREG MESZAROS

CONTACTS:

JOHN WEPRYK, P.E.
PUBLIC WORKS DEPARTMENT
PROJECT MANAGEMENT DIVISION
505 BARTON SPRINGS RD. SUITE: 900
AUSTIN, TEXAS 78704

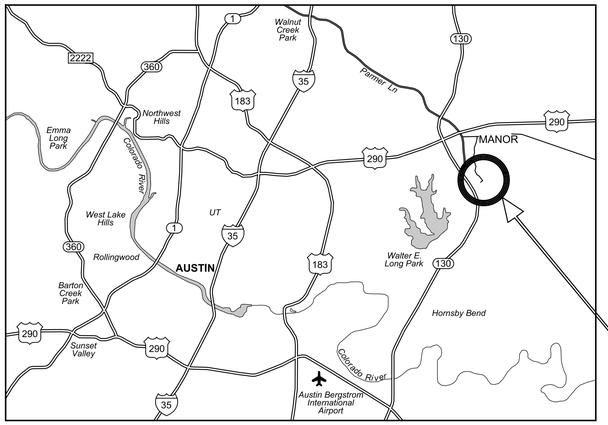

PROJECT LOCATION:
10621 BLUE BLUFF RD.
MANOR, TEXAS 78653

VICINITY MAP
NO SCALE

NOTES:

1. CONTRACTOR SHALL NOTIFY THE PUBLIC WORKS DEPARTMENT 24 HOURS PRIOR TO STARTING CONSTRUCTION OR CLEARING OPERATIONS.
2. THIS PROJECT IS LOCATED WITHIN THE GILLELAND WATERSHED, WHICH IS CLASSIFIED AS A SUBURBAN WATER SUPPLY WATERSHED, AND SHALL BE DEVELOPED, CONSTRUCTED AND MAINTAINED IN ACCORDANCE WITH CHAPTER 25 OF THE CODE OF THE CITY OF AUSTIN.
3. NO PORTION OF THIS PROJECT IS LOCATED WITHIN PARKLAND OR LAND USED FOR PARK PURPOSES.
4. THE SITE IS LOCATED WITHIN THE 100 YEAR FLOOD PLAIN AND THE PROPOSED FACILITIES ARE NOT LOCATED WITHIN THE 100 YEAR FLOOD PLAIN AS SHOWN ON FEMA MAP NO. 48453C0480J, DATED AUGUST 18, 2014.
5. THERE ARE NO CRITICAL ENVIRONMENTAL FEATURES WITHIN 150-FEET OF ANY PORTION OF THE PROJECT. A FIELD INVESTIGATION HAS NOT BEEN PERFORMED AS PART OF THIS PROJECT AND IS NOT REQUIRED. THIS SITE IS NOT LOCATED IN THE EDWARDS AQUIFIER ZONE, AS DEFINED BY THE CITY OF AUSTIN AND THE TEXAS COMMISION ON ENVIRONMENTAL QUALITY.
6. LEGAL DESCRIPTION: 20.00 AC WASTEWATER TREATMENT PLANT EASEMENT RECORDED IN DOCUMENT 200324928 O.P.R.T.C.Tx
7. THIS PROJECT IS IN THE FULL PURPOSE JURISDICTION OF THE CITY OF AUSTIN.

NOTES CONT:

8. INSTALLATION AND REMOVAL OF TEMPORARY AND PERMANENT EROSION/SEDIMENTATION CONTROLS MUST BE REFLECTED IN THE SCHEDULE BY STATION NUMBER.
9. APPROPRIATE EASEMENTS/APPROVALS MUST BE SECURED AND DOCUMENTED FOR PROJECT AREAS LOCATED OUTSIDE OF RIGHT OF WAYS. NO WORK SHALL BE PERFORMED WITHIN THESE AREAS UNTIL ASSOCIATED RIGHT OF ENTRY HAS BEEN SECURED.
10. CONTRACTOR SHALL STAKE ALL PROPOSED SERVICE CONNECTIONS LOCATED WITHIN THE CRITICAL ROOT ZONE OF TREES 8' IN CALIPER AND LARGER AT LEAST 21 CALENDAR DAYS PRIOR TO CONSTRUCTION OF SUCH SERVICES. STAKING SHALL CONSIST OF A LATH WITH NAIL AND PAINT MARKINGS. IN CASES WHERE A STAKE CANNOT BE PLACED WITHOUT DAMAGING PROPERTY, CONTRACTOR MAY USE PAINT ONLY. ONCE STAKING IS COMPLETED, IT IS THE CONTRACTOR'S RESPONSIBILITY TO INFORM THE CITY OF AUSTIN'S CONSTRUCTION INSPECTOR WITHIN TWENTY-FOUR HOURS. THE CITY OF AUSTIN'S CONSTRUCTION INSPECTOR WILL THEN COORDINATE A FIELD REVIEW OF THE SERVICE LOCATIONS WITH THE PROPERTY OWNERS. SERVICE LINE LOCATIONS MAY BE ADJUSTED BASED ON THE REVIEW AND WILL BE RESTAKED BY THE CONTRACTOR AT NO ADDITIONAL COST TO THE CONTRACT. ALL SERVICE LINE STAKING SHALL BE MAINTAINED UNTIL THE SERVICE IS INSTALLED.
11. THIS PROJECT IS IN COMPLIANCE WITH THE AMERICANS WITH DISABILITIES ACT (ADA).

SUBMITTED FOR APPROVAL BY:

**
ORIGINAL
SEALED BY
HANI EMIL MICHEL
06-10-22
TX PE 60763
**

HANI EMIL MICHEL, P.E. — DATE
VICE PRESIDENT
CAROLLO ENGINEERS, INC.

**
ORIGINAL
SEALED BY
DANNY M HURTADO
06-10-22
TX PE 104266
**

DANNY M. HURTADO, P.E. — DATE
PROJECT MANAGER
CAROLLO ENGINEERS, INC.

REVIEWED BY:

JOANETTE AIRD — DATE
PROJECT SPONSOR
AUSTIN WATER,
FACILITY ENGINEERING DIVISION

JOHN WEPRYK, P.E. — DATE
PUBLIC WORKS DEPARTMENT,
PROJECT MANAGEMENT DIVISION

APPROVAL FOR SITE DEVELOPMENT PERMIT:

PLANNING AND DEVELOPMENT REVIEW DEPARTMENT — DATE

DEVELOPMENT PERMIT NUMBER — ANNUAL SITE DEVELOPMENT PERMIT NO.

SUBMITTAL DATE

TEXAS DEPARTMENT OF TRANSPORTATION (TXDOT) — DATE

REV	DATE	BY	DESCRIPTION
			CONFORMED DOCUMENTS

DESIGNED DMH
DRAWN LGD
CHECKED JEA
DATE NOVEMBER 2022

carollo®
TBPELS No. F-882

CITY OF AUSTIN
FOUNDED 1839

CITY OF AUSTIN

CITY OF AUSTIN
WILD HORSE RANCH WWTP EXPANSION
GENERAL
COVER SHEET

VERIFY SCALES
BAR IS ONE INCH ON ORIGINAL DRAWING
0 — 1"
IF NOT ONE INCH ON THIS SHEET, ADJUST SCALES ACCORDINGLY

JOB NO. 10976A.00
DRAWING NO. 00G00
SHEET NO. 1 OF 464

PROJECT NO. 10976A10 FILE NAME: 10976A1000G001.dgn

Plot Date: 10-OCT-2022 7:40:10 AM
User: LDietzel
PlotScale: 1:1
DesignScript: Carollo_Std_Pen_v0905.pen
ColorTable: gshade.ctb
Model: Layout1
LAST SAVED BY: ldietzel

AREA NUMBERS

00	GENERAL
01	SITE PAVING AND GRADING
02	SITE YARD PIPING
04	POTABLE WATER LINE
10	INFLUENT LIFT STATION
15	INFLUENT LIFT STATION ODOR CONTROL
20	HEADWORKS
25	HEADWORKS ODOR CONTROL
30	AERATION BASINS
31	MIXED LIQUOR SPLITTER BOX
40	SECONDARY CLARIFIERS
45	RAS PUMP STATION
46	RAS SPLITTER BOX
47	WAS PUMP STATION
50	FILTERS AND UV FACILITY
55	EXISTING FILTER STRUCTURE
65	PLANT WATER PUMP STATION
70	SLUDGE HOLDING TANK NO. 1
71	SLUDGE HOLDING TANK NO. 2
72	PLANT DRAIN PUMP STATION
75	THICKENING BUILDING
80	OPERATIONS BUILDING
85	SUBSTATION NO. 1
90	ADMINISTRATION BUILDING

DISCIPLINE

G	GENERAL
D	DEMOLITION
C	CIVIL
A	ARCHITECTURAL
S	STRUCTURAL
M	MECHANICAL
H	HVAC
P	PLUMBING
E	ELECTRICAL
N	INSTRUMENTATION
GC	GENERAL CIVIL
GM	GENERAL MECHANICAL
TC	TYPICAL DETAIL - CIVIL
TA	TYPICAL DETAIL - ARCHITECTURAL
TS	TYPICAL DETAIL - STRUCTURAL
TM	TYPICAL DETAIL - MECHANICAL
TP	TYPICAL DETAIL - PIPING
TH	TYPICAL DETAIL - HVAC
TE	TYPICAL DETAIL - ELECTRICAL
TN	TYPICAL DETAIL - INSTRUMENTATION

SHEET NUMBER

XX X XX

VOLUME 1 OF 2

SHEET NO.	DRAWING NO.	SHEET TITLE
		GENERAL
1	00G00	COVER SHEET
2	00G01	DRAWING INDEX - 1
3	00G02	DRAWING INDEX - 2
4	00G03	DRAWING INDEX - 3
5	00G03A	DRAWING INDEX - 4
6	00G04	ABBREVIATIONS
7	00G05	GENERAL NOTES, LEGEND AND SYMBOLS
8	00G06	OVERALL WWTP SITE PLAN
9	00G07	DESIGN CRITERIA
10	00G08	INFLUENT LS AND HEADWORKS PFD
11	00G09	AERATION BASIN PROCESS FLOW DIAGRAM
12	00G10	SECONDARY CLARIFIERS AND RAS PS PFD
13	00G11	FILTER-UV-EFFLUENT PROCESS FLOW DIAGRAM
14	00G12	SLUDGE THICKENING AND STORAGE PROCESS FLOW DIAGRAM
15	00G13	HYDRAULIC PROFILE (2.25 MGD)
16	00G14	OVERALL SITE SURVEY MAP
17	00G15	DIMENSIONAL CONTROL PLAN SHEET 1 OF 4
18	00G16	DIMENSIONAL CONTROL PLAN SHEET 2 OF 4
19	00G17	DIMENSIONAL CONTROL PLAN SHEET 3 OF 4
20	00G18	DIMENSIONAL CONTROL PLAN SHEET 4 OF 4
21	00G19	EQUIPMENT AND VALVE SCHEDULE - 1
22	00G20	EQUIPMENT AND VALVE SCHEDULE - 2
23	00G21	PIPING SCHEDULE
24	00G22	RIGHT OF WAY MANAGEMENT STANDARD NOTES
25	00G23	TRAFFIC CONTROL PLAN CONSTRUCTION ENTRANCE
26	00G24	COA STANDARD DETAILS
		TYPICAL DETAILS
27	00TC01	CIVIL TYPICAL DETAILS SHEET 1
28	00TC02	CIVIL TYPICAL DETAILS SHEET 2
29	00TC03	CIVIL TYPICAL DETAILS SHEET 3
30	00TC04	CIVIL TYPICAL DETAILS SHEET 4
31	00TC05	CIVIL TYPICAL DETAILS SHEET 5
32	00TC06	CIVIL TYPICAL DETAILS SHEET 6
33	00TC07	CIVIL TYPICAL DETAILS SHEET 7
34	00TC08	CIVIL TYPICAL DETAILS SHEET 8
35	00TC10	DRAINAGE TYPICAL DETAILS SHEET 1 OF 4
36	00TC11	DRAINAGE TYPICAL DETAILS SHEET 2 OF 4
37	00TC12	DRAINAGE TYPICAL DETAILS SHEET 3 OF 4
38	00TC13	DRAINAGE TYPICAL DETAILS SHEET 4 OF 4
39	00TA01	ARCHITECTURAL TYPICAL DETAILS 1
40	00TA02	ARCHITECTURAL TYPICAL DETAILS 2
41	00TA03	ARCHITECTURAL TYPICAL DETAILS 3
42	00TA04	ARCHITECTURAL TYPICAL DETAILS 4
43	00TA05	ARCHITECTURAL TYPICAL DETAILS 5
44	00TA06	ARCHITECTURAL TYPICAL DETAILS 6
45	00TA07	ARCHITECTURAL TYPICAL DETAILS 7
46	00TA08	ARCHITECTURAL TYPICAL DETAILS 8
47	00TS01	STRUCTURAL TYPICAL DETAILS 1
48	00TS02	STRUCTURAL TYPICAL DETAILS 2
49	00TS03	STRUCTURAL TYPICAL DETAILS 3
50	00TS04	STRUCTURAL TYPICAL DETAILS 4
51	00TS05	STRUCTURAL TYPICAL DETAILS 5
52	00TS06	STRUCTURAL TYPICAL DETAILS 6
53	00TS07	STRUCTURAL TYPICAL DETAILS 7
54	00TS08	STRUCTURAL TYPICAL DETAILS 8
55	00TS09	STRUCTURAL TYPICAL DETAILS 9
56	00TM01	MECHANICAL TYPICAL DETAILS 1
57	00TM02	MECHANICAL TYPICAL DETAILS 2
58	00TM03	MECHANICAL TYPICAL DETAILS 3
59	00TM04	MECHANICAL TYPICAL DETAILS 4
60	00TP01	PIPING TYPICAL DETAILS 1
61	00TP02	PIPING TYPICAL DETAILS 2
62	00TP03	PIPING TYPICAL DETAILS 3
63	00TP04	PIPING TYPICAL DETAILS 4
64	00TP05	PIPING TYPICAL DETAILS 5
65	00TP06	PIPING TYPICAL DETAILS 6
66	00TP07	PIPING TYPICAL DETAILS 7
67	00TH01	HVAC TYPICAL DETAILS 1
68	00TH02	HVAC TYPICAL DETAILS 2
69	00TH03	HVAC TYPICAL DETAILS 3
70	00TH04	HVAC TYPICAL DETAILS 4
71	00TH05	HVAC TYPICAL DETAILS 5
72	00TH06	HVAC TYPICAL DETAILS 6
73	00TH07	HVAC TYPICAL DETAILS 7
74	00TH08	HVAC TYPICAL DETAILS 8
75	00TE01	ELECTRICAL TYPICAL DETAILS - 1
76	00TE02	ELECTRICAL TYPICAL DETAILS - 2
77	00TE03	ELECTRICAL TYPICAL DETAILS - 3
78	00TE04	ELECTRICAL TYPICAL DETAILS - 4
79	00TE05	ELECTRICAL TYPICAL DETAILS - 5
80	00TE06	ELECTRICAL TYPICAL DETAILS - 6
81	00TE07	ELECTRICAL TYPICAL DETAILS - 7
82	00TE08	ELECTRICAL TYPICAL DETAILS - 8
83	00TE09	ELECTRICAL TYPICAL DETAILS - 9
84	00TE10	ELECTRICAL TYPICAL DETAILS - 10
85	00TE11	ELECTRICAL TYPICAL DETAILS - 11
86	00TE12	ELECTRICAL TYPICAL DETAILS - 12
87	00TE13	ELECTRICAL TYPICAL DETAILS - 13
88	00TE14	ELECTRICAL TYPICAL DETAILS - 14
89	00TE15	ELECTRICAL TYPICAL DETAILS - 15
90	00TN01	INSTRUMENTATION TYPICAL DETAILS - 1
91	00TN02	INSTRUMENTATION TYPICAL DETAILS - 2
92	00TN03	INSTRUMENTATION TYPICAL DETAILS - 3
93	00TN04	INSTRUMENTATION TYPICAL DETAILS - 4
94	00TN05	INSTRUMENTATION TYPICAL DETAILS - 5
95	00TN06	INSTRUMENTATION TYPICAL DETAILS - 6
96	00TN07	INSTRUMENTATION TYPICAL DETAILS - 7
		DEMOLITION
97	00DE01	CONDUIT/WIRE SCHEDULES DEMOLITION - 1
98	00DE02	CONDUIT/WIRE SCHEDULES DEMOLITION - 2
99	01D01	SITE DEMOLITION PLAN (SHEET 1 OF 4)
100	01D02	SITE DEMOLITION PLAN (SHEET 2 OF 4)
101	01D03	SITE DEMOLITION PLAN (SHEET 3 OF 4)
102	01D04	SITE DEMOLITION PLAN (SHEET 4 OF 4)
103	01D05	ALKALINITY SYSTEM RELOCATION
104	02D01	YARD PIPING DEMOLITION PLAN (SHEET 1 OF 5)
105	02D02	YARD PIPING DEMOLITION PLAN (SHEET 2 OF 5)
106	02D03	YARD PIPING DEMOLITION PLAN (SHEET 3 OF 5)
107	02D04	YARD PIPING DEMOLITION PLAN (SHEET 4 OF 5)
108	02D05	YARD PIPING DEMOLITION PLAN (SHEET 5 OF 5)
109	05DE01	SITE DUCT BANK PLAN - DEMOLITION - 1
110	05DE02	SITE DUCT BANK PLAN - DEMOLITION - 2
111	05DE03	SITE DUCT BANK PLAN - DEMOLITION - 3
112	05DE04	SITE DUCT BANK PLAN - DEMOLITION - 4
113	05DE05	SITE DUCT BANK SECTIONS - DEMOLITION - 1
114	05DE06	SITE DUCT BANK SECTIONS - DEMOLITION - 2
115	05DE07	SITE DUCT BANK SECTIONS - DEMOLITION - 3
116	05DE08	SITE DUCT BANK SECTIONS - DEMOLITION - 4
117	10D01	INFLUENT LIFT STATION PLANS AND SECTION (SHEET 1 OF 2)
118	10D02	INFLUENT LIFT STATION PLANS AND SECTION (SHEET 2 OF 2)
119	10DE01	LIFT STATION POWER PLAN - DEMOLITION
120	10DE02	LIFT STATION I&C PLAN - DEMOLITION
121	10DE03	LIFT STATION AUXILIARY AND LIGHTING PLAN - DEMOLITION
122	10DN01	LIFT PUMP NO. 1 CONTROL WIRING SCHEMATICS - DEMOLITION - 1
123	10DN02	LIFT PUMP NO. 1 CONTROL WIRING SCHEMATICS - DEMOLITION - 2
124	10DN03	LIFT PUMP NO. 2 CONTROL WIRING SCHEMATICS - DEMOLITION - 1
125	10DN04	LIFT PUMP NO. 2 CONTROL WIRING SCHEMATICS - DEMOLITION - 2
126	10DN05	LIFT PUMP NO. 3 CONTROL WIRING SCHEMATICS - DEMOLITION - 1
127	10DN06	LIFT PUMP NO. 3 CONTROL WIRING SCHEMATICS - DEMOLITION - 2
128	10DN07	LIFT STATION MISCELLANEOUS CONTROL WIRING SCHEMATICS - DEMOLITION
129	10DN08	LIFT STATION INSTRUMENT WIRING SCHEMATICS - DEMOLITION
130	30D01	EXISTING AERATION BASINS 1 & 2
131	30D02	EXISTING AERATION BASINS 1 & 2 DETAILS 1
132	30D03	EXISTING AERATION BASINS 1 & 2 DETAILS 2
133	30DE01	AERATION BASIN AUXILIARY PLAN - DEMOLITION
134	30DE02	AERATION BASIN ENLARGED PLAN - DEMOLITION
135	30DE03	AERATION BASIN PANEL SCHEDULES - DEMOLITION
136	30DN01	BAR SCREEN CONTROL PANEL FIELD INTERFACE WIRING SCHEMATIC - DEMOLITION
137	30DN02	AERATION BASIN INSTRUMENT WIRING SCHEMATICS - DEMOLITION
138	40D01	EXISTING SECONDARY CLARIFIER DEMOLITION PLAN
139	40D02	EXISTING SECONDARY CLARIFIER DEMOLITION DETAILS
140	40DE01	FINAL CLARIFIER NO. 1 POWER, AUXILIARY, AND I&C PLAN - DEMOLITION
141	40DN01	FINAL CLARIFIER NO. 1 FIELD INTERFACE WIRING SCHEMATIC - DEMOLITION
142	45D01	EXISTING RAS PUMP STATION No. 1 DEMOLITION PLAN
143	45D02	EXISTING RAS PUMP STATION No. 1 DEMOLITION SECTION
144	45DE01	EXISTING RAS PUMP STATION POWER AND I&C PLAN - DEMOLITION
145	45DE02	EXISTING RAS PUMP STATION AUXILIARY PLAN - DEMOLITION
146	45DE03	EXISTING RAS PUMP STATION DUCT BANK SECTIONS - DEMOLITION
147	45DN01	RAS PUMP NO. 1 CONTROL WIRING SCHEMATICS - DEMOLITION
148	45DN02	RAS PUMP NO. 2 CONTROL WIRING SCHEMATICS - DEMOLITION
149	45DN03	WAS VALVE FIELD INTERFACE WIRING SCHEMATIC - DEMOLITION
150	45DN04	EXISTING RAS PUMP STATION INSTRUMENT WIRING SCHEMATICS - DEMOLITION - 1
151	45DN05	EXISTING RAS PUMP STATION INSTRUMENT WIRING SCHEMATICS - DEMOLITION - 2
152	50D01	EXISTING DISK FILTER RELOCATION - DETAILS
153	50D02	EXISTING DISK FILTER RELOCATION - PLAN
154	50DN01	NPW PUMP NO. 1 CONTROL WIRING SCHEMATICS - DEMOLITION
155	50DN02	NPW PUMP NO. 2 CONTROL WIRING SCHEMATICS - DEMOLITION
156	50DN03	FILTER CONTROL PANEL FIELD INTERFACE WIRING SCHEMATIC - DEMOLITION
157	50DN04	UV SYSTEM CONTROL PANEL FIELD INTERFACE WIRING SCHEMATIC - DEMOLITION
158	50DN05	FILTER COMPLEX INSTRUMENT WIRING SCHEMATICS - DEMOLITION - 1
159	50DN06	FILTER COMPLEX INSTRUMENT WIRING SCHEMATICS - DEMOLITION - 2
160	55D01	EXISTING FILTER STRUCTURE DEMOLITION PLAN
161	55D02	EXISTING FILTER STRUCTURE DEMOLITION SECTIONS
162	55DE01	FILTER COMPLEX POWER AND I&C PLAN - DEMOLITION
163	55DE02	FILTER COMPLEX AUXILIARY PLAN - DEMOLITION
164	55DE03	FILTER COMPLEX ENLARGED PLAN - DEMOLITION
165	55DE04	FILTER COMPLEX DUCT BANK SECTIONS - DEMOLITION
166	71D01	SLUDGE HOLDING TANK NO. 2 SHEET 1 OF 2
167	71D02	SLUDGE HOLDING TANK NO. 2 SHEET 2 OF 2
168	71DE01	SLUDGE HOLDING TANK POWER, AUXILIARY, AND I&C PLAN - DEMOLITION
169	80D01	OPERATIONS BUILDING
170	80DE01	OPERATIONS BUILDING 480V DETAILED ONE-LINE DIAGRAM - DEMOLITION - 1
171	80DE02	OPERATIONS BUILDING 480V DETAILED ONE-LINE DIAGRAM - DEMOLITION - 2
172	80DE03	OPERATIONS BUILDING 480V DETAILED ONE-LINE DIAGRAM - DEMOLITION - 3
173	80DE04	OPERATIONS BUILDING 480V DETAILED ONE-LINE DIAGRAM - DEMOLITION - 4
174	80DE05	OPERATIONS BUILDING 480V DETAILED ONE-LINE DIAGRAM - DEMOLITION - 5
175	80DE06	OPERATIONS BUILDING 480V DETAILED ONE-LINE DIAGRAM - DEMOLITION - 6
176	80DE07	OPERATIONS BUILDING 480V DETAILED ONE-LINE DIAGRAM - DEMOLITION - 7
177	80DE08	OPERATIONS BUILDING EQUIPMENT LOCATION PLAN DEMOLITION - 1
178	80DE09	OPERATIONS BUILDING EQUIPMENT LOCATION PLAN DEMOLITION - 2
179	80DE10	OPERATIONS BUILDING PANEL SCHEDULES - DEMOLITION - 1
180	80DE11	OPERATIONS BUILDING PANEL SCHEDULES - DEMOLITION - 2
181	80DE12	OPERATIONS BUILDING PANEL SCHEDULES - DEMOLITION - 3
182	80DE13	OPERATIONS BUILDING PANEL SCHEDULES - REFERENCE - 1
183	80DE14	OPERATIONS BUILDING PANEL SCHEDULES - REFERENCE - 2
184	80DE15	OPERATIONS BUILDING PANEL SCHEDULES - REFERENCE - 3
185	80DE16	RAIN WATER COLLECTION SYSTEM BLOCK DIAGRAM - DEMOLITION
186	80DE17	OPERATIONS BUILDING DUCT BANK PLAN - DEMOLITION
187	80DE18	OPERATIONS BUILDING ELECTRICAL ROOM DUCT BANK PLAN - DEMOLITION
188	80DE19	OPERATIONS BUILDING LIGHTING PLAN - DEMOLITION
189	80DE20	OPERATIONS BUILDING AUXILIARY SYSTEMS PLAN - REFERENCE
190	80DE21	OPERATIONS BUILDING GROUNDING PLAN - REFERENCE
191	80DE22	OPERATIONS BUILDING ENLARGED AREA PLANS - DEMOLITION - 1
192	80DE23	BLOWER ROOM PLAN - DEMOLITION
193	80DE24	OPERATIONS BUILDING ENLARGED AREA PLANS - DEMOLITION - 2
194	80DE25	RAIN WATER COLLECTION SYSTEM PLAN - DEMOLITION
195	80DE26	OPERATIONS BUILDING DUCT BANK SECTIONS - DEMOLITION - 1
196	80DE27	OPERATIONS BUILDING DUCT BANK SECTIONS - DEMOLITION - 2
197	80DE28	OPERATIONS BUILDING DUCT BANK SECTIONS - DEMOLITION - 3
198	80DE29	OPERATIONS BUILDING DUCT BANK SECTIONS - DEMOLITION - 4
199	80DN01	NETWORK ARCHITECTURE DEMOLITION
200	80DN02	OPERATIONS BUILDING POWER WIRING SCHEMATICS - DEMOLITION - 1
201	80DN03	OPERATIONS BUILDING POWER WIRING SCHEMATICS - DEMOLITION - 2
202	80DN04	OPERATIONS BUILDING POWER WIRING SCHEMATICS - DEMOLITION - 3
203	80DN05	OPERATIONS BUILDING POWER WIRING SCHEMATICS - DEMOLITION - 4
204	80DN06	AERATION BLOWER "OP-PAB-001" CONTROL WIRING SCHEMATICS - DEMOLITION - 1
205	80DN07	AERATION BLOWER "OP-PAB-001" CONTROL WIRING SCHEMATICS - DEMOLITION - 2
206	80DN08	AERATION BLOWER "OP-PAB-001" CONTROL WIRING SCHEMATICS - DEMOLITION - 3
207	80DN09	AERATION BLOWER "OP-PAB-002" CONTROL WIRING SCHEMATICS - DEMOLITION - 1

THIS CONFORMED DOCUMENT IS RELEASED FOR THE CONVENIENCE OF THE CONTRACTOR UNDER THE AUTHORITY OF:

DANNY M HURTADO, P.E. — 11-01-22
TX LIC NO. 104266 — DATE

SEE DISCLAIMER FOR LIMITATIONS OF USE.

CONTRACT DOCUMENTS DATED JUNE 10, 2022, AS PART OF THE BIDDING DOCUMENTS (DRAWINGS AND SPECIFICATIONS) AND SUBSEQUENTLY ISSUED ADDENDA HAVE BEEN MERGED INTO ONE CONFORMING SET OF DOCUMENTS FOR THE CONVENIENCE OF THE CONTRACTOR. IF INCONSISTENCIES OR AMBIGUITIES BETWEEN "CONFORMED" DOCUMENTS AND CONTRACT DOCUMENTS ARE FOUND, THE CONTRACT DOCUMENTS SHALL GOVERN.

REV	DATE	BY	DESCRIPTION
			CONFORMED DOCUMENTS

DESIGNED DMH
DRAWN LGD
CHECKED JEA
DATE NOVEMBER 2022

** ORIGINAL SEALED BY DANNY M. HURTADO 06-10-22 TX PE 104266 **

carollo®
TBPELS No. F-882

CITY OF AUSTIN
FOUNDED 1839

CITY OF AUSTIN

CITY OF AUSTIN
WILD HORSE RANCH WWTP EXPANSION
GENERAL
DRAWING INDEX - 1

VERIFY SCALES
BAR IS ONE INCH ON ORIGINAL DRAWING
0 1"
IF NOT ONE INCH ON THIS SHEET, ADJUST SCALES ACCORDINGLY

JOB NO. 10976A.00
DRAWING NO. 00G01
SHEET NO. 2 OF 464

PROJECT NO. 10976A10 FILE NAME: 10976A1000G001.dgn

Plot Date: 10-OCT-2022 7:31:23 AM
User: LDietzel
PlotScale: 1:1
DesignScript: Carollo_Std_Pen_v0905.pen
ColorTable: gshade.ctb
Model: Layout1
LAST SAVED BY: ldietzel

SHEET NO.	DRAWING NO.	SHEET TITLE
		DEMOLITION (CONT)
208	80DN10	AERATION BLOWER "OP-PAB-002" CONTROL WIRING SCHEMATICS - DEMOLITION - 2
209	80DN11	AERATION BLOWER "OP-PAB-002" CONTROL WIRING SCHEMATICS - DEMOLITION - 3
210	80DN12	AERATION BLOWER "OP-PAB-003" CONTROL WIRING SCHEMATICS - DEMOLITION - 1
211	80DN13	AERATION BLOWER "OP-PAB-003" CONTROL WIRING SCHEMATICS - DEMOLITION - 2
212	80DN14	AERATION BLOWER "OP-PAB-003" CONTROL WIRING SCHEMATICS - DEMOLITION - 3
213	80DN15	EXHAUST FAN "OP-EF-002" CONTROL WIRING SCHEMATICS - DEMOLITION
214	80DN16	EXHAUST FAN "OP-EF-003" CONTROL WIRING SCHEMATICS - DEMOLITION
215	80DN17	EXHAUST FAN "OP-EF-004" CONTROL WIRING SCHEMATICS - DEMOLITION
216	80DN18	RAIN WATER SYSTEM CONTROL WIRING SCHEMATICS - DEMOLITION
217	80DN19	RAIN WATER COLLECTION SYSTEM CONTROL PANEL FIELD INTERFACE WIRING SCHEMATIC - DEMOLITION
218	80DN20	DRY CHEMICAL FEEDER FIELD INTERFACE WIRING SCHEMATIC - DEMOLITION
219	80DN21	EYE WASH STATION FIELD INTERFACE WIRING SCHEMATIC - DEMOLITION
220	80DN22	CHEMICAL FEED PUMP INSTRUMENT WIRING SCHEMATICS - DEMOLITION
		CIVIL
221	00GC01	CIVIL LEGEND AND SYMBOLS
222	00GC02	GENERAL CIVIL CONSTRUCTION NOTES (SHEET 1 OF 2)
223	00GC03	GENERAL CIVIL CONSTRUCTION NOTES (SHEET 2 OF 2)
224	00GC04	EROSION SEDIMENTATION CONTROL DETAILS AND NOTES (SHEET 1 OF 2)
225	00GC05	EROSION SEDIMENTATION CONTROL DETAILS AND NOTES (SHEET 2 OF 2)
226	00GC06	TREE PROTECTION ENVIRONMENTAL DETAILS AND NOTES
227	00GC07	EX. TOPO E/S CONTROL & TREE PROTECTION PLANT SITE PLAN - (SHEET 1 OF 2)
228	00GC08	EX. TOPO E/S CONTROL & TREE PROTECTION PLANT SITE PLAN - (SHEET 2 OF 2)
229	00GC09	EX. TOPO, E/S CONTROL & TREE PROTECTION WATERLINE PLAN - (SHEET 1 OF 2)
230	00GC10	EX. TOPO, E/S CONTROL & TREE PROTECTION WATERLINE PLAN - (SHEET 2 OF 2)
231	00GC11	TREE INVENTORY
232	00C01	EXISTING DRAINAGE MAP
233	00C02	EXISTING DRAINAGE CALCULATIONS
234	00C03	PROPOSED DRAINAGE MAP
235	00C04	PROPOSED DRAINAGE CALCULATIONS
236	00C05	WATER QUALITY POND PLAN
237	00C06	WATER QUALITY POND SECTIONS
238	00C07	WATER QUALITY DETENTION POND NOTES AND CALCULATIONS
239	00C08	STORM DRAIN PLAN AND PROFILE
240	01C01	PAVING AND GRADING SITE PLAN SHEET 1 OF 2
241	01C02	PAVING AND GRADING SITE PLAN SHEET 2 OF 2
242	01C10	FLOOD PROTECTION LAYOUT SHEET 1 OF 2
243	01C11	FLOOD PROTECTION LAYOUT SHEET 2 OF 2
244	01C13	FLOOD PROTECTION SECTIONS
245	02C01	YARD PIPING SITE PLAN SHEET 1 OF 3
246	02C02	YARD PIPING SITE PLAN SHEET 2 OF 3
247	02C04	YARD PIPING SITE PLAN SHEET 3 OF 3
248	02C10	YARD PIPING DETAIL (SHEET 1 OF 6)
249	02C11	YARD PIPING DETAIL (SHEET 2 OF 6)
250	02C12	YARD PIPING DETAIL (SHEET 3 OF 6)
251	02C13	YARD PIPING DETAIL (SHEET 4 OF 6)
252	02C14	YARD PIPING DETAIL (SHEET 5 OF 6)
253	02C15	YARD PIPING DETAIL (SHEET 6 OF 6)
254	02C20	YARD PIPING PROFILES SHEET 1 OF 19
255	02C21	YARD PIPING PROFILES SHEET 2 OF 19
256	02C22	YARD PIPING PROFILES SHEET 3 OF 19
257	02C23	YARD PIPING PROFILES SHEET 4 OF 19
258	02C24	YARD PIPING PROFILES SHEET 5 OF 19
259	02C25	YARD PIPING PROFILES SHEET 6 OF 19
260	02C26	YARD PIPING PROFILES SHEET 7 OF 19
261	02C27	YARD PIPING PROFILES SHEET 8 OF 19
262	02C28	YARD PIPING PROFILES SHEET 9 OF 19
263	02C29	YARD PIPING PROFILES SHEET 10 OF 19
264	02C30	YARD PIPING PROFILES SHEET 11 OF 19
265	02C31	YARD PIPING PROFILES SHEET 12 OF 19
266	02C32	YARD PIPING PROFILES SHEET 13 OF 19
267	02C33	YARD PIPING PROFILES SHEET 14 OF 19
268	02C34	YARD PIPING PROFILES SHEET 15 OF 19
269	02C35	YARD PIPING PROFILES SHEET 16 OF 19
270	02C36	YARD PIPING PROFILES SHEET 17 OF 19
271	02C37	YARD PIPING PROFILES SHEET 18 OF 19
272	02C38	YARD PIPING PROFILES SHEET 19 OF 19
273	02C51	ELECTRICAL SITE PLAN SHEET 1 OF 2
274	02C52	ELECTRICAL SITE PLAN SHEET 2 OF 2
275	02C53	ELECTRICAL DUCTBANK CURVE TABLE
276	02C60	ELECTRICAL DUCTBANKS PROFILES SHEET 1 OF 8
277	02C61	ELECTRICAL DUCTBANKS PROFILES SHEET 2 OF 8
278	02C62	ELECTRICAL DUCTBANKS PROFILES SHEET 3 OF 8
279	02C63	ELECTRICAL DUCTBANKS PROFILES SHEET 4 OF 8
280	02C64	ELECTRICAL DUCTBANKS PROFILES SHEET 5 OF 8
281	02C65	ELECTRICAL DUCTBANKS PROFILES SHEET 6 OF 8
282	02C66	ELECTRICAL DUCTBANKS PROFILES SHEET 7 OF 8
283	02C67	ELECTRICAL DUCTBANKS PROFILES SHEET 8 OF 8
284	04C01	OVERALL POTABLE WATER PIPELINE LAYOUT
285	04C02	POTABLE WATER LINE PLAN AND PROFILE STA 0+00 TO STA 6+50
286	04C03	POTABLE WATER LINE PLAN AND PROFILE STA 6+50 TO STA 13+24
287	04C10	EXISTING WATERLINE RECORD DRAWING (SHEET 1 OF 3)
288	04C11	EXISTING WATERLINE RECORD DRAWING (SHEET 2 OF 3)
289	04C12	EXISTING WATERLINE RECORD DRAWING (SHEET 3 OF 3)
		ARCHITECTURAL
290	85A01	SUBSTATION NO. 1 CODE REVIEW DATA

SHEET NO.	DRAWING NO.	SHEET TITLE
		ARCHITECTURAL (CONT)
291	85A02	SUBSTATION NO. 1 LEVEL ONE FLOOR PLAN
292	85A03	SUBSTATION NO. 1 ROOF PLAN
293	85A04	SUBSTATION NO. 1 EXTERIOR ELEVATIONS - NORTH & SOUTH
294	85A05	SUBSTATION NO. 1 EXTERIOR ELEVATIONS - EAST & WEST
295	85A06	SUBSTATION NO. 1 SECTIONS A & B
296	85A07	SUBSTATION NO. 1 WALL SECTIONS
297	85A08	SUBSTATION NO. 1 REFLECTED CEILING PLAN
298	85A09	SUBSTATION NO. 1 SCHEDULES
299	85A10	SUBSTATION NO. 1 PARTITION TYPES
300	90A01	ADMINISTRATION BUILDING CODE REVIEW DATA
301	90A02	ADMINISTRATION BUILDING LEVEL ONE FLOOR PLAN
302	90A03	ADMINISTRATION BUILDING EQUIPMENT PLATFORM FLOOR PLAN
303	90A04	ADMINISTRATION BUILDING ROOF PLAN
304	90A05	ADMINISTRATION BUILDING EXTERIOR ELEVATIONS - NORTH
305	90A06	ADMINISTRATION BUILDING EXTERIOR ELEVATIONS - SOUTH
306	90A07	ADMINISTRATION BUILDING EXTERIOR ELEVATIONS - EAST
307	90A08	ADMINISTRATION BUILDING EXTERIOR ELEVATIONS - WEST
308	90A09	ADMINISTRATION BUILDING SECTIONS - A & B
309	90A10	ADMINISTRATION BUILDING WALL SECTIONS
310	90A11	ADMINISTRATION BUILDING ENLARGED FLOOR PLANS
311	90A12	ADMINISTRATION BUILDING INTERIOR ELEVATIONS
312	90A13	ADMINISTRATION BUILDING CABINET DETAILS
313	90A14	ADMINISTRATION BUILDING LEVEL ONE REFLECTED CEILING PLAN
314	90A15	ADMINISTRATION BUILDING EQUIPMENT PLATFORM REFLECTED CEILING PLAN
315	90A16	ADMINISTRATION BUILDING SCHEDULES
316	90A17	ADMINISTRATION BUILDING PARTITION TYPES & DETAILS
		STRUCTURAL
317	00GS01	GENERAL STRUCTURAL NOTES
318	00GS02	SPECIAL INSPECTION NOTES 1
319	00GS03	SPECIAL INSPECTION NOTES 2
320	00S01	SPLITTER STRUCTURE LOWER/UPPER PLANS AND SECTIONS
321	10S01	INFLUENT LIFT STATION FOUNDATION PLAN, SECTION AND DETAILS
322	20S01	HEADWORKS PIER LAYOUT PLAN
323	20S02	HEADWORKS COLUMN LAYOUT PLAN - EL. 485.00'
324	20S03	HEADWORKS INTERMEDIATE PLAN - EL. 494.00'
325	20S04	HEADWORKS INTERMEDIATE PLAN - EL. 496.50'
326	20S05	HEADWORKS UPPER PLAN - EL. 501.00'
327	20S06	HEADWORKS SECTIONS AND DETAILS 1
328	20S07	HEADWORKS SECTIONS AND DETAILS 2
329	20S08	HEADWORKS SECTIONS AND DETAILS 3
330	20S09	HEADWORKS SECTIONS AND DETAILS 4
331	20S10	HEADWORKS SECTIONS AND DETAILS 5
332	20S11	HEADWORKS SECTIONS AND DETAILS 6
333	20S12	HEADWORKS SECTIONS AND DETAILS 7
334	20S13	HEADWORKS SECTIONS AND DETAILS 8
335	20S14	HEADWORKS SECTIONS AND DETAILS 9
336	25S01	HEADWORKS ODOR CONTROL FOUNDATION PLAN
337	25S02	HEADWORKS ODOR CONTROL SECTIONS AND DETAILS 1
338	30S01	AERATION BASIN 1 & 2 FOUNDATION PLAN
339	30S02	AERATION BASIN 1 & 2 TOP PLAN
340	30S03	AERATION BASIN 1 & 2 SECTIONS AND DETAILS 1
341	30S04	AERATION BASIN 1 & 2 SECTIONS AND DETAILS 2
342	30S05	AERATION BASIN 1 & 2 SECTIONS AND DETAILS 3
343	30S06	AERATION BASIN 3 & 4 FOUNDATION PLAN
344	30S07	AERATION BASIN 3 & 4 UPPER PLAN
345	30S08	AERATION BASIN 3 & 4 SECTIONS AND DETAILS 1
346	30S09	AERATION BASIN 3 & 4 SECTIONS AND DETAILS 2
347	30S10	AERATION BASIN 3 & 4 SECTIONS AND DETAILS 3
348	30S11	TEMPORARY ALKALINITY ADDITION PAD PLAN AND SECTION
349	31S01	MIXED LIQUOR SPLITTER BOX PLANS
350	31S02	MIXED LIQUOR SPLITTER BOX SECTIONS 1
351	31S03	MIXED LIQUOR SPLITTER BOX SECTIONS 2
352	40S01	CLARIFIER 2 AND 3 LOWER PLAN
353	40S02	CLARIFIER 2 AND 3 UPPER PLAN
354	40S03	CLARIFIER 2 AND 3 SECTIONS AND DETAILS 1
355	40S04	CLARIFIER 2 AND 3 SECTIONS AND DETAILS 2
356	40S05	CLARIFIER 2 AND 3 SECTIONS AND DETAILS 3
357	40S06	SCUM STATION 1 LOWER/UPPER PLANS AND SECTIONS
358	40S07	SCUM STATION 2 LOWER/UPPER PLANS AND SECTIONS
359	45S01	RAS PUMP STATION PLANS
360	45S02	RAS PUMP STATION SECTIONS 1
361	45S03	RAS PUMP STATION SECTIONS 2
362	46S01	RAS SPLITTER BOX PLANS
363	46S02	RAS SPLITTER BOX SECTIONS
364	47S01	WAS PUMP STATION PLANS
365	47S02	WAS PUMP STATION SECTIONS 1
366	47S03	WAS PUMP STATION SECTIONS 2
367	50S01	FILTER/UV DISINFECTION COMPLEX PLANS
368	50S02	FILTER/UV DISINFECTION COMPLEX ROOF PLAN
369	50S03	FILTER/UV DISINFECTION COMPLEX SECTIONS AND DETAILS 1
370	50S04	FILTER/UV DISINFECTION COMPLEX SECTIONS AND DETAILS 2
371	50S05	FILTER/UV DISINFECTION COMPLEX SECTIONS AND DETAILS 3
372	65S01	PLANT WATER PUMP STATION PLANS
373	65S02	PLANT WATER PUMP STATION SECTIONS
374	70S01	SLUDGE HOLDING TANK 1 PLANS
375	70S02	SLUDGE HOLDING TANK 1 SECTIONS AND DETAILS 1
376	70S03	SLUDGE HOLDING TANK 1 SECTIONS AND DETAILS 2

SHEET NO.	DRAWING NO.	SHEET TITLE
		STRUCTURAL (CONT)
377	71S01	EXISTING SLUDGE HOLDING TANK 2 PLANS
378	72S01	PLANT DRAIN PUMP STATION PLANS
379	72S02	PLANT DRAIN PUMP STATION SECTIONS AND DETAILS
380	75S01	THICKENING BUILDING FOUNDATION PLAN
381	75S02	THICKENING BUILDING CANOPY FRAMING PLAN
382	75S03	THICKENING BUILDING SECTIONS AND DETAILS 1
383	75S04	THICKENING BUILDING SECTIONS AND DETAILS 2
384	80S01	EXISTING OPERATIONS BUILDING FOUNDATION PLAN
385	80S02	EXISTING OPERATIONS BUILDING SECTIONS AND DETAILS 1
386	80S03	EXISTING OPERATIONS BUILDING SECTIONS AND DETAILS 2
387	80S04	EXISTING OPERATIONS BUILDING SECTIONS AND DETAILS 3
388	85S01	SUBSTATION NO. 1 LOWER PLAN
389	85S02	SUBSTATION NO. 1 ROOF PLAN
390	85S03	SUBSTATION NO. 1 SECTIONS AND DETAILS 1
391	85S04	SUBSTATION NO. 1 SECTIONS AND DETAILS 2
392	85S05	SUBSTATION NO. 1 SECTIONS AND DETAILS 3
393	90S01	ADMINISTRATION BUILDING PLANS 1
394	90S02	ADMINISTRATION BUILDING PLANS 2
395	90S03	ADMINISTRATION BUILDING SECTIONS AND DETAILS 1
396	90S04	ADMINISTRATION BUILDING SECTIONS AND DETAILS 2
397	90S05	ADMINISTRATION BUILDING SECTIONS AND DETAILS 3
		MECHANICAL
398	00GM01	MECHANICAL LEGEND AND SYMBOLS
399	10M01	INFLUENT LIFT STATION PLANS AND SECTION
400	15M01	INFLUENT LIFT STATION ODOR CONTROL PLAN
401	15M02	INFLUENT LIFT STATION ODOR CONTROL SECTIONS
402	20M01	HEADWORKS UPPER PLAN
403	20M02	HEADWORKS LOWER PLAN
404	20M03	HEADWORKS SECTION (SHEET 1 OF 4)
405	20M04	HEADWORKS SECTION (SHEET 2 OF 4)
406	20M05	HEADWORKS SECTION (SHEET 3 OF 4)
407	20M06	HEADWORKS SECTION (SHEET 4 OF 4)
408	25M01	HEADWORKS ODOR CONTROL PLAN AND SECTIONS
409	30M01	AERATION BASIN 1 & 2 MODIFICATIONS LOWER PLAN
410	30M02	AERATION BASIN 1 & 2 MODIFICATIONS UPPER PLAN
411	30M03	AERATION BASIN 1 & 2 MODIFICATIONS SECTIONS 1
412	30M04	AERATION BASIN 1 & 2 MODIFICATIONS SECTIONS 2
413	30M05	AERATION BASIN 3 & 4 MODIFICATIONS LOWER PLAN
414	30M06	AERATION BASIN 3 & 4 MODIFICATIONS UPPER PLAN
415	30M07	AERATION BASIN 3 & 4 MODIFICATIONS SECTIONS 1
416	30M08	AERATION BASIN 3 & 4 MODIFICATIONS SECTIONS 2
417	31M01	MLSS SPLITTER BOX PLAN AND SECTIONS
418	40M01	SECONDARY CLARIFIERS MECHANICAL LAYOUT
419	40M02	SECONDARY CLARIFIERS MECHANICAL SECTION
420	40M03	CLARIFIER SECTIONS AND DETAILS
421	40M05	SCUM PUMP STATION MECHANICAL PLAN AND SECTION
422	45M01	EXISTING RAS PUMP STATION No. 1 MECHANICAL PLAN
423	45M02	RAS PUMP STATION No. 2 MECHANICAL PLAN
424	45M03	RAS PUMP STATION No. 2 MECHANICAL SECTION
425	46M01	RAS SPLITTER BOX PLAN AND SECTIONS
426	47M01	WAS PUMP STATION MECHANICAL PLAN
427	50M01	FILTER / UV DISINFECTION COMPLEX UPPER PLAN
428	50M02	FILTER / UV DISINFECTION COMPLEX LOWER PLAN
429	50M03	FILTER / UV DISINFECTION COMPLEX SECTIONS - 1
430	50M04	FILTER / UV DISINFECTION COMPLEX SECTIONS - 2
431	65M01	PLANT WATER PUMP STATION PLAN AND SECTIONS
432	70M01	SLUDGE HOLDING TANK NO. 1 PLAN
433	70M02	SLUDGE HOLDING TANK NO. 1 SECTIONS - 1
434	71M01	SLUDGE HOLDING TANK NO. 2 PLAN
435	71M02	SLUDGE HOLDING TANK NO. 2 SECTIONS - 1
436	72M01	PLANT DRAIN PUMP STATION PLAN AND SECTIONS
437	75M01	THICKENING BUILDING PLAN
438	75M02	THICKENING BUILDING SECTIONS - 1
439	75M03	THICKENING SYSTEM PIPING PLAN AND SECTION
440	80M01	OPERATIONS BUILDING PLANS
441	80M02	OPERATIONS BUILDING SECTIONS
442	80M03	OPERATIONS BUILDING ELEVATIONS
		HVAC
443	00H01	GENERAL NOTES, ABBREVIATIONS AND SYMBOLS
444	00H02	EQUIPMENT SCHEDULES 1
445	00H03	EQUIPMENT SCHEDULES 2
446	10H01	INFLUENT LIFT STATION PLAN
447	10H02	INFLUENT LIFT STATION AIRFLOW SCHEMATIC
448	20H01	HEADWORKS BUILDING LOWER PLAN
449	20H02	HEADWORKS BUILDING UPPER PLAN
450	20H03	HEADWORKS BUILDING SECTIONS
451	20H04	HEADWORKS BUILDING AIRFLOW SCHEMATIC
452	85H01	SUBSTATION NO. 1 PLAN
453	85H02	SUBSTATION NO. 1 SECTIONS
454	85H03	SUBSTATION NO. 1 AIRFLOW SCHEMATIC
455	90H01	ADMINISTRATION BUILDING LOWER PLAN
456	90H02	ADMINISTRATION BUILDING UPPER PLAN
457	90H03	ADMINISTRATION BUILDING SECTIONS 1
458	90H04	ADMINISTRATION BUILDING SECTIONS 2
459	90H05	ADMINISTRATION BUILDING AIRFLOW SCHEMATIC 1

THIS CONFORMED DOCUMENT IS RELEASED FOR THE CONVENIENCE OF THE CONTRACTOR UNDER THE AUTHORITY OF:

11-01-22
DANNY M HURTADO, P.E. DATE
TX LIC NO. 104266

SEE DISCLAIMER FOR LIMITATIONS OF USE.

CONTRACT DOCUMENTS DATED JUNE 10, 2022, AS PART OF THE BIDDING DOCUMENTS (DRAWINGS AND SPECIFICATIONS) AND SUBSEQUENTLY ISSUED ADDENDA HAVE BEEN MERGED INTO ONE CONFORMING SET OF DOCUMENTS FOR THE CONVENIENCE OF THE CONTRACTOR. IF INCONSISTENCIES OR AMBIGUITIES BETWEEN "CONFORMED" DOCUMENTS AND CONTRACT DOCUMENTS ARE FOUND, THE CONTRACT DOCUMENTS SHALL GOVERN.

REV	DATE	BY	DESCRIPTION
			CONFORMED DOCUMENTS

DESIGNED DMH
DRAWN LGD
CHECKED JEA
DATE NOVEMBER 2022

** ORIGINAL SEALED BY DANNY M. HURTADO 06-10-22 TX PE 104266 **

carollo®
TBPELS No. F-882

CITY OF AUSTIN
FOUNDED 1839

CITY OF AUSTIN

CITY OF AUSTIN
WILD HORSE RANCH WWTP EXPANSION
GENERAL
DRAWING INDEX - 2

VERIFY SCALES
BAR IS ONE INCH ON ORIGINAL DRAWING
0 1"
IF NOT ONE INCH ON THIS SHEET, ADJUST SCALES ACCORDINGLY

JOB NO. 10976A.00
DRAWING NO. 00G02
SHEET NO. 3 OF 464

PROJECT NO. 10976A10 FILE NAME: 10976A1000G002.dgn

Plot Date: 10-OCT-2022 7:41:53 AM
User: LDietzel
PlotScale: 1:1
DesignScript: Carollo_Std_Pen_v0905.pen
ColorTable: gshade.ctb
Model: Layout1
LAST SAVED BY: ldietzel

	HVAC (CONT)	
460	90H06	ADMINISTRATION BUILDING AIRFLOW SCHEMATIC 2
	PLUMBING	
461	00P01	GENERAL NOTES, ABBREVIATIONS AND SYMBOLS
462	90P01	ADMINISTRATION BUILDING DRAINAGE PLAN
463	90P02	ADMINISTRATION BUILDING DOMESTIC WATER PLAN
464	90P03	ADMINISTRATION BUILDING ISOMETRICS

VOLUME 2 OF 2

	GENERAL	
1	00G00	COVER SHEET
2	00G01	DRAWING INDEX - 1
3	00G02	DRAWING INDEX - 2
4	00G03	DRAWING INDEX - 3
5	00G03A	DRAWING INDEX - 4
	ELECTRICAL	
6	00E01	SYMBOLS LEGEND - 1
7	00E02	SYMBOLS LEGEND - 2
8	00E03	SYMBOLS LEGEND - 3
9	00E04	GENERAL NOTES
10	00E05	CONDUIT/WIRE SCHEDULES PROPOSED - 1
11	00E06	CONDUIT/WIRE SCHEDULES PROPOSED - 2
12	00E07	CONDUIT/WIRE SCHEDULES PROPOSED - 3
13	00E08	CONDUIT/WIRE SCHEDULES PROPOSED - 4
14	00E09	CONDUIT/WIRE SCHEDULES PROPOSED - 5
15	00E10	CONDUIT/WIRE SCHEDULES PROPOSED - 6
16	00E11	CONDUIT/WIRE SCHEDULES PROPOSED - 7
17	00E12	EQUIPMENT TAG REPLACEMENT SCHEDULE
18	05E01	OVERALL SITE PLAN RENOVATION - 1
19	05E02	OVERALL SITE PLAN RENOVATION - 2
20	05E03	OVERALL DUCT BANK PLAN RENOVATION - 1
21	05E04	OVERALL DUCT BANK PLAN RENOVATION - 2
22	05E05	OVERALL DUCT BANK PLAN RENOVATION - 3
23	05E06	OVERALL DUCT BANK PLAN RENOVATION - 4
24	05E07	OVERALL DUCT BANK PLAN RENOVATION - 5
25	05E08	OVERALL DUCT BANK PLAN RENOVATION - 6
26	05E09	SITE DUCT BANK SECTIONS RENOVATION - 1
27	05E10	SITE DUCT BANK SECTIONS RENOVATION - 2
28	05E11	SITE DUCT BANK SECTIONS PROPOSED - 1
29	05E12	SITE DUCT BANK SECTIONS PROPOSED - 2
30	05E13	SITE DUCT BANK SECTIONS PROPOSED - 3
31	05E14	SITE DUCT BANK SECTIONS PROPOSED - 4
32	05E15	SITE DUCT BANK SECTIONS PROPOSED - 5
33	05E16	SITE DUCT BANK SECTIONS PROPOSED - 6
34	05E17	SITE DUCT BANK SECTIONS PROPOSED - 7
35	05E18	OVERALL SITE GROUNDING PLAN PROPOSED - 1
36	05E19	OVERALL SITE GROUNDING PLAN PROPOSED - 2
37	05E20	OVERALL SITE GROUNDING PLAN PROPOSED - 3
38	05E21	OVERALL SITE GROUNDING PLAN PROPOSED - 4
39	05E22	FILTER POWER AND I&C PLAN - TEMPORARY
40	05E23	MAGNESIUM HYDROXIDE SYSTEM POWER AND I&C PLAN - TEMPORARY
41	10E01	LIFT STATION POWER, I&C, AND LIGHTING PLAN - RENOVATION
42	15E01	LIFT STATION ODOR CONTROL POWER, I&C, AND LIGHTING PLAN - PROPOSED
43	20E01	HEADWORKS LOWER FLOOR EQUIPMENT LOCATION PLAN - PROPOSED
44	20E02	HEADWORKS UPPER LEVEL EQUIPMENT LOCATION PLAN - PROPOSED
45	20E03	HEADWORKS LOWER FLOOR POWER AND I&C PLAN - PROPOSED
46	20E04	HEADWORKS UPPER LEVEL POWER AND I&C PLAN - PROPOSED
47	20E05	HEADWORKS LOWER FLOOR LIGHTING AND AUXILIARY PLAN - PROPOSED
48	20E06	HEADWORKS UPPER LEVEL LIGHTING AND AUXILIARY PLAN - PROPOSED
49	25E01	HEADWORKS ODOR CONTROL POWER, I&C, AND LIGHTING PLAN - PROPOSED
50	25E02	HEADWORKS ODOR CONTROL PANEL SCHEDULES - PROPOSED
51	30E01	AERATION BASIN NO. 1 AND 2 EQUIPMENT LOCATION PLAN - RENOVATION
52	30E02	AERATION BASIN NO. 1 POWER AND I&C PLAN - RENOVATION
53	30E03	AERATION BASIN NO. 2 POWER AND I&C PLAN - RENOVATION
54	30E04	AERATION BASIN NO. 1 AND 2 LIGHTING AND AUXILIARY PLAN - RENOVATION
55	30E05	AERATION BASIN NO. 3 AND 4 EQUIPMENT LOCATION PLAN - PROPOSED
56	30E06	AERATION BASIN NO. 3 POWER AND I&C PLAN - PROPOSED
57	30E07	AERATION BASIN NO. 3 POWER AND I&C PLAN - PROPOSED
58	30E08	AERATION BASIN NO. 3 AND 4 LIGHTING AND AUXILIARY PLAN - PROPOSED
59	40E01	SECONDARY CLARIFIER NO. 1 POWER, I&C, AND LIGHTING PLAN - RENOVATION
60	40E02	SECONDARY CLARIFIER NO. 2 POWER AND I&C - PROPOSED
61	40E03	SECONDARY CLARIFIER NO. 3 POWER AND I&C - PROPOSED
62	40E04	SECONDARY CLARIFIER NO. 2 AND 3 AUXILIARY AND LIGHTING PLAN - PROPOSED
63	45E01	RAS PUMP STATION NO. 1 POWER, I&C, AND LIGHTING PLAN - RENOVATION
64	45E02	RAS PUMP STATION NO. 2 POWER AND I&C PLAN - PROPOSED
65	45E03	RAS PUMP STATION NO. 2 LIGHTING AND AUXILIARY PLAN - PROPOSED
66	45E04	RAS PUMP STATION NO. 1 PANEL SCHEDULES - PROPOSED
67	47E01	WAS PUMP STATION POWER AND I&C PLAN - PROPOSED
68	47E02	WAS PUMP STATION LIGHTING AND AUXILIARY PLAN - PROPOSED
69	47E03	WAS PUMP STATION PANEL SCHEDULES - PROPOSED
70	50E01	FILTER / UV DISINFECTION COMPLEX EQUIPMENT LOCATION PLAN - PROPOSED
71	50E02	FILTER / UV DISINFECTION COMPLEX POWER AND I&C PLAN - PROPOSED
72	50E03	FILTER / UV DISINFECTION COMPLEX LOWER LEVEL LIGHTING AND AUXILIARY PLAN - PROPOSED
73	50E04	FILTER / UV DISINFECTION COMPLEX UPPER LEVEL LIGHTING AND AUXILIARY PLAN - PROPOSED
74	50E05	FILTER / UV DISINFECTION COMPLEX GROUNDING PLAN - PROPOSED
75	55E01	FILTER COMPLEX POWER AND I&C PLAN - RENOVATION
76	55E02	FILTER COMPLEX AUXILIARY AND LIGHTING PLAN - RENOVATION
77	55E03	FILTER COMPLEX POWER AND I&C PLAN - TEMPORARY
78	65E01	PLANT WATER PUMP STATION POWER, I&C, AND LIGHTING PLAN - PROPOSED

THIS CONFORMED DOCUMENT IS RELEASED FOR THE CONVENIENCE OF THE CONTRACTOR UNDER THE AUTHORITY OF:

DANNY M HURTADO, P.E. — 11-01-22 DATE
TX LIC NO. 104266

SEE DISCLAIMER FOR LIMITATIONS OF USE.

CONTRACT DOCUMENTS DATED JUNE 10, 2022, AS PART OF THE BIDDING DOCUMENTS (DRAWINGS AND SPECIFICATIONS) AND SUBSEQUENTLY ISSUED ADDENDA HAVE BEEN MERGED INTO ONE CONFORMING SET OF DOCUMENTS FOR THE CONVENIENCE OF THE CONTRACTOR. IF INCONSISTENCIES OR AMBIGUITIES BETWEEN "CONFORMED" DOCUMENTS AND CONTRACT DOCUMENTS ARE FOUND, THE CONTRACT DOCUMENTS SHALL GOVERN.

SHEET NO.	DRAWING NO.	SHEET TITLE
	ELECTRICAL (CONT)	
79	70E01	SLUDGE HOLDING TANK NO. 1 POWER, I&C, AND LIGHTING PLAN - PROPOSED
80	71E01	SLUDGE HOLDING TANK NO. 2 POWER, I&C, AND LIGHTING PLAN - PROPOSED
81	72E01	PLANT DRAIN PUMP STATION POWER, I&C, AND LIGHTING PLAN - PROPOSED
82	75E01	THICKENING BUILDING EQUIPMENT LOCATION PLAN - PROPOSED
83	75E02	THICKENING BUILDING POWER AND I&C PLAN - PROPOSED
84	75E03	THICKENING BUILDING LIGHTING AND AUXILIARY PLAN - PROPOSED
85	75E04	THICKENING BUILDING PANEL SCHEDULES - PROPOSED
86	80E01	OPERATIONS BUILDING OVERALL ONE-LINE DIAGRAM RENOVATION
87	80E02	OPERATIONS BUILDING DETAILED ONE-LINE DIAGRAM RENOVATION - 1
88	80E03	OPERATIONS BUILDING DETAILED ONE-LINE DIAGRAM RENOVATION - 2
89	80E04	OPERATIONS BUILDING DETAILED ONE-LINE DIAGRAM RENOVATION - 3
90	80E05	OPERATIONS BUILDING DETAILED ONE-LINE DIAGRAM RENOVATION - 4
91	80E06	OPERATIONS BUILDING DETAILED ONE-LINE DIAGRAM RENOVATION - 5
92	80E07	OPERATIONS BUILDING DETAILED ONE-LINE DIAGRAM RENOVATION - 6
93	80E08	OPERATIONS BUILDING DETAILED ONE-LINE DIAGRAM RENOVATION - 7
94	80E09	OPERATIONS BUILDING MCC FRONT ELEVATIONS RENOVATION - 1
95	80E10	OPERATIONS BUILDING MCC FRONT ELEVATIONS RENOVATION - 2
96	80E11	OPERATIONS BUILDING PANEL "OP-LP-1" PANEL SCHEDULES - RENOVATION
97	80E12	OPERATIONS BUILDING PANEL "OP-LP-2" PANEL SCHEDULES - RENOVATION
98	80E13	OPERATIONS BUILDING PANEL "OP-CPP-001" PANEL SCHEDULE S- RENOVATION
99	80E14	OPERATIONS BUILDING POWER AND I&C EQUIPMENT LOCATION PLAN - RENOVATION
100	80E15	OPERATIONS BUILDING BLOWER ROOM ENLARGED EQUIPMENT LOCATION PLAN - RENOVATION
101	80E16	OPERATIONS BUILDING POWER AND I&C UNDERGROUND DUCT BANK SYSTEM - RENOVATION
102	80E17	OPERATIONS BUILDING POWER AND I&C OVERHEAD CONDUIT CORRIDOR SYSTEM - RENOVATION
103	80E18	OPERATIONS BUILDING ELECTRICAL ROOM CONDUIT CORRIDOR SYSTEM - RENOVATION
104	80E19	OPERATIONS BUILDING POWER AND I&C EXISTING UNDERGROUND DUCT BANK SYSTEM - RENOVATION
105	80E20	OPERATIONS BUILDING ELECTRICAL ROOM EXISTING UNDERGROUND DUCT BANK SYSTEM - RENOVATION
106	80E21	OPERATIONS BUILDING POWER AND I&C PLAN - RENOVATION
107	80E22	OPERATIONS BUILDING BLOWER ROOM POWER AND I&C PLAN - RENOVATION
108	80E23	OPERATIONS BUILDING TYPICAL BLOWER ENLARGED AREAS POWER AND I&C PLAN - RENOVATION
109	80E24	OPERATIONS BUILDING ELECTRICAL ROOM POWER AND I&C PLAN - RENOVATION
110	80E25	OPERATIONS BUILDING LIGHTING PLAN - RENOVATION
111	80E26	OPERATIONS BUILDING DUCT BANK SECTIONS - RENOVATION - 1
112	80E27	OPERATIONS BUILDING DUCT BANK SECTIONS - RENOVATION - 2
113	80E28	OPERATIONS BUILDING DUCT BANK SECTIONS - RENOVATION - 3
114	80E29	OPERATIONS BUILDING DUCT BANK SECTIONS - RENOVATION - 4
115	85E01	SUBSTATION NO. 1 OVERALL ONE-LINE DIAGRAM - PROPOSED
116	85E02	480V SWITCHBOARD "SUB1-SWBD-01" DETAILED ONE-LINE DIAGRAM - PROPOSED - 1
117	85E03	480V SWITCHBOARD "SUB1-SWBD-01" DETAILED ONE-LINE DIAGRAM - PROPOSED - 2
118	85E04	480V SWITCHBOARD "SUB1-SWBD-02" DETAILED ONE-LINE DIAGRAM - PROPOSED - 1
119	85E05	480V SWITCHBOARD "SUB1-SWBD-02" DETAILED ONE-LINE DIAGRAM - PROPOSED - 2
120	85E06	ELECTRICAL BUILDING MCC "SUB1-MCC-01" ONE-LINE DIAGRAM - PROPOSED - 1
121	85E07	ELECTRICAL BUILDING MCC "SUB1-MCC-01" ONE-LINE DIAGRAM - PROPOSED - 2
122	85E08	ELECTRICAL BUILDING MCC "SUB1-MCC-01" ONE-LINE DIAGRAM - PROPOSED - 3
123	85E09	ELECTRICAL BUILDING MCC "SUB1-MCC-02" ONE-LINE DIAGRAM - PROPOSED - 1
124	85E10	ELECTRICAL BUILDING MCC "SUB1-MCC-02" ONE-LINE DIAGRAM - PROPOSED - 2
125	85E11	ELECTRICAL BUILDING MCC "SUB1-MCC-02" ONE-LINE DIAGRAM - PROPOSED - 3
126	85E12	VARIABLE FREQUENCY DRIVE ONE-LINE DIAGRAM PROPOSED - 1
127	85E13	VARIABLE FREQUENCY DRIVE ONE-LINE DIAGRAM PROPOSED - 2
128	85E14	SUBSTATION NO. 1 AUXILIARY ONE-LINE DIAGRAM - PROPOSED
129	85E15	SUBSTATION NO. 1 PANEL SCHEDULES - PROPOSED
130	85E16	SUBSTATION NO. 1 SWITCHBOARD FRONT ELEVATION - PROPOSED - 1
131	85E17	SUBSTATION NO. 1 SWITCHBOARD FRONT ELEVATION - PROPOSED - 2
132	85E18	SUBSTATION NO. 1 MCC "SUB1-MCC-01" FRONT ELEVATION - PROPOSED - 1
133	85E19	SUBSTATION NO. 1 MCC "SUB1-MCC-02" FRONT ELEVATION - PROPOSED - 2
134	85E20	SUBSTATION NO. 1 EQUIPMENT LOCATION PLAN - PROPOSED
135	85E21	SUBSTATION NO. 1 UNDERGROUND RACEWAY PLAN - PROPOSED
136	85E22	SUBSTATION NO. 1 POWER PLAN - PROPOSED
137	85E23	SUBSTATION NO. 1 I&C PLAN - PROPOSED
138	85E24	SUBSTATION NO. 1 LIGHTING PLAN - PROPOSED
139	85E25	SUBSTATION NO. 1 AUXILIARY PLAN - PROPOSED
140	85E26	SUBSTATION NO. 1 GROUNDING PLAN - PROPOSED
141	90E01	ADMINISTRATION BUILDING DETAILED ONE-LINE PROPOSED - 1
142	90E02	ADMINISTRATION BUILDING DETAILED ONE-LINE PROPOSED - 2
143	90E03	ADMINISTRATION BUILDING FRONT ELEVATION PROPOSED
144	90E04	ADMINISTRATION BUILDING PANEL SCHEDULES - PROPOSED - 1
145	90E05	ADMINISTRATION BUILDING PANEL SCHEDULES - PROPOSED - 2
146	90E06	ADMINISTRATION BUILDING LOWER FLOOR EQUIPMENT LOCATION PLAN - PROPOSED
147	90E07	ADMINISTRATION BUILDING UPPER FLOOR EQUIPMENT LOCATION PLAN - PROPOSED
148	90E08	ADMINISTRATION BUILDING LOWER FLOOR POWER AND I&C PLAN - PROPOSED
149	90E09	ADMINISTRATION BUILDING UPPER FLOOR POWER AND I&C PLAN - PROPOSED
150	90E10	ADMINISTRATION BUILDING LOWER FLOOR LIGHTING PLAN - PROPOSED
151	90E11	ADMINISTRATION BUILDING UPPER FLOOR LIGHTING PLAN - PROPOSED
152	90E12	ADMINISTRATION BUILDING LOWER FLOOR AUXILIARY PLAN - PROPOSED
153	90E13	ADMINISTRATION BUILDING UPPER FLOOR AUXILIARY PLAN - PROPOSED
154	90E14	ADMINISTRATION BUILDING LOWER FLOOR GROUNDING PLAN - PROPOSED
155	90E15	ADMINISTRATION BUILDING UPPER FLOOR GROUNDING PLAN - PROPOSED
	INSTRUMENTATION	
156	00N01	MECHANICAL SYMBOLS
157	00N02	SYMBOLS LEGEND - 1
158	00N03	SYMBOLS LEGEND - 2
159	00N04	SYMBOLS LEGEND - 3
160	00N05	INSTRUMENT LIST - 1
161	00N06	INSTRUMENT LIST - 2
162	00N07	INSTRUMENT LIST - 3
163	00N08	OVERALL NETWORK ARCHITECTURE PROPOSED - 1
164	00N09	OVERALL NETWORK ARCHITECTURE PROPOSED - 2
165	00N10	TYPICAL PLC I/O WIRING SCHEMATIC
166	00N11	PLC I/O LIST - 1
167	00N12	PLC I/O LIST - 2

SHEET NO.	DRAWING NO.	SHEET TITLE
	INSTRUMENTATION (CONT)	
168	00N13	PLC I/O LIST - 3
169	00N14	PLC I/O LIST - 4
170	00N15	PLC I/O LIST - 5
171	00N16	PLC I/O LIST - 6
172	00N17	PLC I/O LIST - 7
173	00N18	PLC I/O LIST - 8
174	00N19	PLC I/O LIST - 9
175	00N20	PLC I/O LIST - 10
176	00N21	PLC I/O LIST - 11
177	00N22	PLC I/O LIST - 12
178	00N23	PLC I/O LIST - 13
179	00N24	PLC I/O LIST - 14
180	00N25	PLC I/O LIST - 15
181	00N26	PLC I/O LIST - 16
182	00N27	PLC I/O LIST - 17
183	10N01	INFLUENT LIFT STATION PROCESS & INSTRUMENTATION DIAGRAM - 1
184	10N02	INFLUENT LIFT STATION PROCESS & INSTRUMENTATION DIAGRAM - 2
185	10N03	TYPICAL LIFT PUMP CONTROL WIRING SCHEMATICS - PROPOSED - 1
186	10N04	TYPICAL LIFT PUMP CONTROL WIRING SCHEMATICS - PROPOSED - 2
187	10N05	TYPICAL LIFT PUMP CONTROL WIRING SCHEMATICS - PROPOSED - 3
188	10N06	INFLUENT LIFT STATION MISCELLANEOUS CONTROL WIRING SCHEMATICS - PROPOSED
189	10N07	INFLUENT LIFT STATION SUPPLY FAN CONTROL WIRING SCHEMATICS - PROPOSED
190	10N08	INFLUENT LIFT STATION INSTRUMENT LOOP WIRING SCHEMATICS - PROPOSED
191	10N09	INFLUENT LIFT STATION LOCAL CONTROL PANEL FRONT ELEVATION - PROPOSED
192	15N01	LIFT STATION ODOR CONTROL PROCESS & INSTRUMENTATION DIAGRAM
193	15N02	LIFT STATION ODOR CONTROL CONTROL PANEL FIELD INTERFACE WIRING SCHEMATIC - PROPOSED
194	15N03	LIFT STATION NETWORK ARCHITECTURE - PROPOSED
195	20N01	BAR SCREENS PROCESS & INSTRUMENTATION DIAGRAM - 1
196	20N02	BAR SCREENS PROCESS & INSTRUMENTATION DIAGRAM - 2
197	20N03	BAR SCREENS PROCESS & INSTRUMENTATION DIAGRAM - 3
198	20N04	HEADWORKS NETWORK ARCHITECTURE - PROPOSED
199	20N05	GRIT PUMP CONTROL WIRING SCHEMATICS - PROPOSED
200	20N06	HEADWORKS SUPPLY FAN CONTROL WIRING SCHEMATICS - PROPOSED
201	20N07	TYPICAL BAR SCREEN CONTROL PANEL FIELD INTERFACE WIRING SCHEMATIC - PROPOSED
202	20N08	WASHER/COMPACTOR CONTROL PANEL FIELD INTERFACE WIRING SCHEMATIC - PROPOSED
203	20N09	SCREEN CONVEYOR CONTROL PANEL FIELD INTERFACE WIRING SCHEMATIC - PROPOSED
204	20N10	VORTEX GRIT UNIT DRIVE CONTROL PANEL FIELD INTERFACE WIRING SCHEMATIC - PROPOSED
205	20N11	GRIT WASHER CONTROL PANEL FIELD INTERFACE WIRING SCHEMATIC - PROPOSED
206	20N12	TYPICAL BAR SCREEN GATE ACTUATORS FIELD INTERFACE WIRING SCHEMATIC - PROPOSED
207	20N13	HEADWORKS INSTRUMENT LOOP WIRING SCHEMATICS - PROPOSED
208	20N14	GRIT PUMP FIELD CONTROL STATION ELEVATION - PROPOSED
209	25N01	HEADWORKS ODOR CONTROL PROCESS & INSTRUMENTATION DIAGRAM
210	25N02	HEADWORKS ODOR CONTROL NETWORK ARCHITECTURE - PROPOSED
211	25N03	HEADWORKS AREA LIGHTING CONTROL PANEL WIRING SCHEMATICS - PROPOSED
212	25N04	ODOR CONTROL CONTROL PANEL FIELD INTERFACE WIRING SCHEMATIC - PROPOSED
213	30N01	TYPICAL AERATION BASIN PROCESS & INSTRUMENTATION DIAGRAM - 1
214	30N02	TYPICAL AERATION BASIN PROCESS & INSTRUMENTATION DIAGRAM - 2
215	30N03	TYPICAL AERATION BASIN MIXER CONTROL WIRING SCHEMATICS - PROPOSED - 1
216	30N04	TYPICAL AERATION BASIN MIXER CONTROL WIRING SCHEMATICS - PROPOSED - 2
217	30N05	TYPICAL AERATION BASIN MIXED LIQUOR RECYCLE PUMP CONTROL WIRING SCHEMATICS - PROPOSED - 1
218	30N06	TYPICAL AERATION BASIN MIXED LIQUOR RECYCLE PUMP CONTROL WIRING SCHEMATICS - PROPOSED - 2
219	30N07	TYPICAL AERATION BASIN PROCESS AIR VALVE FIELD INTERFACE WIRING SCHEMATIC - PROPOSED
220	30N08	AERATION BASIN INSTRUMENT LOOP WIRING SCHEMATICS - PROPOSED - 1
221	30N09	AERATION BASIN INSTRUMENT LOOP WIRING SCHEMATICS - PROPOSED - 2
222	30N10	AERATION BASIN INSTRUMENT LOOP WIRING SCHEMATICS - PROPOSED - 3
223	30N11	AERATION BASIN MIXER AND MIXED LIQUOR LOCAL CONTROL PANEL FRONT ELEVATION - PROPOSED
224	31N01	MIXED LIQUOR SPLITTER BOX PROCESS FLOW DIAGRAM
225	40N01	EXISTING FINAL CLARIFIER NO. 1 PROCESS & INSTRUMENTATION DIAGRAM
226	40N02	FINAL CLARIFIER NO. 2 PROCESS & INSTRUMENTATION DIAGRAM
227	40N03	FINAL CLARIFIER NO. 3 PROCESS & INSTRUMENTATION DIAGRAM
228	40N04	SCUM PUMPING STATION PROCESS & INSTRUMENTATION DIAGRAM - 1
229	40N05	SCUM PUMPING STATION PROCESS & INSTRUMENTATION DIAGRAM - 2
230	40N06	TYPICAL SCUM PUMP CONTROL WIRING SCHEMATICS - PROPOSED - 1
231	40N07	TYPICAL SCUM PUMP CONTROL WIRING SCHEMATICS - PROPOSED - 2
232	40N08	EXISTING FINAL CLARIFIER CONTROL PANEL FIELD INTERFACE WIRING SCHEMATIC - RENOVATION
233	40N09	TYPICAL FINAL CLARIFIER CONTROL PANEL FIELD INTERFACE WIRING SCHEMATIC - PROPOSED
234	40N10	SECONDARY CLARIFIER INSTRUMENT LOOP WIRING SCHEMATICS - PROPOSED - 1
235	40N11	SCUM WELL INSTRUMENT LOOP WIRING SCHEMATICS - PROPOSED - 2
236	40N12	SECONDARY CLARIFIER SCUM PUMP LOCAL CONTROL PANEL FRONT ELEVATION - PROPOSED
237	45N01	RAS PUMPS PROCESS & INSTRUMENTATION DIAGRAM - 1
238	45N02	RAS PUMPS PROCESS & INSTRUMENTATION DIAGRAM - 2
239	45N03	TYPICAL RAS PUMP CONTROL WIRING SCHEMATICS - RENOVATION
240	45N04	TYPICAL RAS PUMP CONTROL WIRING SCHEMATICS - PROPOSED
241	45N05	SECONDARY CLARIFIER AREA LIGHTING CONTROL PANEL WIRING SCHEMATICS - PROPOSED
242	45N06	TYPICAL RAS PUMP FIELD CONTROL STATION ELEVATION - PROPOSED
243	45N07	RAS PUMPS INSTRUMENT LOOP WIRING SCHEMATICS - PROPOSED - 1
244	45N08	RAS PUMPS INSTRUMENT LOOP WIRING SCHEMATICS - PROPOSED - 2
245	45N09	RAS PUMPS INSTRUMENT LOOP WIRING SCHEMATICS - PROPOSED - 3
246	46N01	RAS SPLITTER BOX PROCESS FLOW DIAGRAM
247	47N01	WAS PUMPS PROCESS & INSTRUMENTATION DIAGRAM
248	47N02	TYPICAL WAS PUMP CONTROL WIRING SCHEMATICS - PROPOSED
249	47N03	AERATION BASIN AREA LIGHTING CONTROL PANEL WIRING SCHEMATICS - PROPOSED
250	47N04	MACERATOR CONTROL PANEL FIELD INTERFACE WIRING SCHEMATIC - PROPOSED
251	47N05	WAS PUMPS INSTRUMENT LOOP WIRING SCHEMATICS - PROPOSED - 1
252	47N06	WAS PUMPS INSTRUMENT LOOP WIRING SCHEMATICS - PROPOSED - 2
253	47N07	TYPICAL WAS PUMP FIELD CONTROL STATION ELEVATION - PROPOSED
254	50N01	TYPICAL FILTER PROCESS & INSTRUMENTATION DIAGRAM - 1
255	50N02	TYPICAL FILTER PROCESS & INSTRUMENTATION DIAGRAM - 2
256	50N03	UV DISINFECTION PROCESS & INSTRUMENTATION DIAGRAM
257	50N04	FILTER / UV DISINFECTION COMPLEX NETWORK ARCHITECTURE - PROPOSED
258	50N05	TYPICAL FILTER CONTROL PANEL FIELD INTERFACE WIRING SCHEMATIC - PROPOSED - 1
259	50N06	TYPICAL FILTER CONTROL PANEL FIELD INTERFACE WIRING SCHEMATIC - PROPOSED - 2

REV	DATE	BY	DESCRIPTION
			CONFORMED DOCUMENTS

DESIGNED DMH
DRAWN SDW
CHECKED JEA
DATE NOVEMBER 2022

** ORIGINAL SEALED BY DANNY M. HURTADO 06-10-22 TX PE 104266 **

carollo® TBPELS No. F-882

CITY OF AUSTIN — FOUNDED 1839

CITY OF AUSTIN

CITY OF AUSTIN
WILD HORSE RANCH WWTP EXPANSION
GENERAL
DRAWING INDEX - 3

VERIFY SCALES
BAR IS ONE INCH ON ORIGINAL DRAWING
0 — 1"
IF NOT ONE INCH ON THIS SHEET, ADJUST SCALES ACCORDINGLY

JOB NO. 10976A.00
DRAWING NO. 00G03
SHEET NO. 4 OF 464

Plot Date: 10-OCT-2022 7:47:42 AM
User: LDietzel
PlotScale: 1:1
DesignScript: Carollo_Std_Pen_v0905.pen
ColorTable: gshade.ctb
Model: Layout1
LAST SAVED BY: ldietzel

PROJECT NO. 10976A10 FILE NAME: 10976A1000G003.dgn

SHEET NO.	DRAWING NO.	SHEET TITLE
		INSTRUMENTATION (CONT)
260	50N07	SUMP PUMPS CONTROL PANEL FIELD INTERFACE WIRING SCHEMATIC - PROPOSED
261	50N08	UV DISINFECTION CONTROL PANEL FIELD INTERFACE WIRING SCHEMATIC - PROPOSED - 1
262	50N09	UV DISINFECTION CONTROL PANEL FIELD INTERFACE WIRING SCHEMATIC - PROPOSED - 2
263	50N10	UV DISINFECTION CONTROL PANEL FIELD INTERFACE WIRING SCHEMATIC - PROPOSED - 3
264	50N11	UV DISINFECTION CONTROL PANEL FIELD INTERFACE WIRING SCHEMATIC - PROPOSED - 4
265	50N12	UV DISINFECTION CONTROL PANEL FIELD INTERFACE WIRING SCHEMATIC - PROPOSED - 5
266	55N01	PARSHALL FLUME AND CASCADE AERATION PROCESS & INSTRUMENTATION DIAGRAM
267	55N02	PARSHALL FLUME AND CASCADE AERATION INSTRUMENT LOOP WIRING SCHEMATICS - PROPOSED
268	65N01	PLANT WATER PUMP STATION PROCESS & INSTRUMENTATION DIAGRAM
269	65N02	TYPICAL NPW PUMP CONTROL WIRING SCHEMATICS - PROPOSED - 1
270	65N03	TYPICAL NPW PUMP CONTROL WIRING SCHEMATICS - PROPOSED - 2
271	65N04	NPW INSTRUMENT LOOP WIRING SCHEMATICS - PROPOSED - 1
272	65N05	NPW INSTRUMENT LOOP WIRING SCHEMATICS - PROPOSED - 2
273	65N06	NPW PUMP STATION FIELD CONTROL STATION ELEVATION - PROPOSED
274	70N01	SLUDGE HOLDING TANK NO. 1 PROCESS & INSTRUMENTATION DIAGRAM
275	70N02	TYPICAL THICKENING FEED PUMP VFD CONTROL WIRING SCHEMATICS - PROPOSED - 1
276	70N03	TYPICAL THICKENING FEED PUMP VFD CONTROL WIRING SCHEMATICS - PROPOSED - 2
277	70N04	TYPICAL THICKENING FEED PUMP VFD CONTROL WIRING SCHEMATICS - PROPOSED - 3
278	70N05	TYPICAL THICKENING FEED PUMP VFD CONTROL WIRING SCHEMATICS - PROPOSED - 4
279	70N06	SLUDGE HOLDING TANK NO. 1 INSTRUMENT LOOP WIRING SCHEMATICS - PROPOSED - 1
280	70N07	SLUDGE HOLDING TANK NO. 1 INSTRUMENT LOOP WIRING SCHEMATICS - PROPOSED - 2
281	70N08	THICKENING FEED PUMP FIELD CONTROL STATION ELEVATION - PROPOSED
282	71N01	SLUDGE HOLDING TANK NO. 2 PROCESS & INSTRUMENTATION DIAGRAM
283	71N02	SLUDGE HOLDING TANK NO. 2 INSTRUMENT LOOP WIRING SCHEMATICS - PROPOSED - 1
284	71N03	SLUDGE HOLDING TANK NO. 2 INSTRUMENT LOOP WIRING SCHEMATICS - PROPOSED - 2
285	71N04	SLUDGE HOLDING TANK NO. 2 INSTRUMENT LOOP WIRING SCHEMATICS - PROPOSED - 3
286	71N05	SLUDGE HOLDING TANK NO. 2 INSTRUMENT LOOP WIRING SCHEMATICS - PROPOSED - 4
287	72N01	PLANT DRAIN PUMP STATION PROCESS & INSTRUMENTATION DIAGRAM
288	72N02	TYPICAL PLANT DRAIN PUMP CONTROL WIRING SCHEMATICS - PROPOSED - 1
289	72N03	TYPICAL PLANT DRAIN PUMP CONTROL WIRING SCHEMATICS - PROPOSED - 2
290	72N04	TYPICAL PLANT DRAIN PUMP CONTROL WIRING SCHEMATICS - PROPOSED - 3
291	72N05	PLANT DRAIN PUMP STATION CONTROL WIRING SCHEMATICS - PROPOSED
292	72N06	PLANT DRAIN PUMP STATION INSTRUMENT LOOP WIRING SCHEMATICS - PROPOSED
293	72N07	PLANT DRAIN PUMP STATION LOCAL CONTROL PANEL FRONT ELEVATION - PROPOSED
294	75N01	THICKENER PROCESS & INSTRUMENTATION DIAGRAM - 1
295	75N02	THICKENER PROCESS & INSTRUMENTATION DIAGRAM - 2
296	75N03	SLUDGE HOLDING TANK BLOWER NO. 1 PROCESS & INSTRUMENTATION DIAGRAM
297	75N04	SLUDGE HOLDING TANK BLOWER NO. 2 PROCESS & INSTRUMENTATION DIAGRAM
298	75N05	SLUDGE HOLDING TANK BLOWER NO. 3 PROCESS & INSTRUMENTATION DIAGRAM
299	75N06	THICKENER BUILDING NETWORK ARCHITECTURE - PROPOSED
300	75N07	TYPICAL BLOWER CONTROL WIRING SCHEMATICS - PROPOSED - 1
301	75N08	TYPICAL BLOWER CONTROL WIRING SCHEMATICS - PROPOSED - 2
302	75N09	TYPICAL BLOWER CONTROL WIRING SCHEMATICS - PROPOSED - 3
303	75N10	TYPICAL BLOWER CONTROL WIRING SCHEMATICS - PROPOSED - 4
304	75N11	THICKENER BUIDLING LIGHTING CONTROL PANEL WIRING SCHEMATICS - PROPOSED
305	75N12	THICKENER CONTROL PANEL FIELD INTERFACE WIRING SCHEMATIC - PROPOSED
306	75N13	THICKENING BUILDING INSTRUMENT LOOP WIRING SCHEMATICS - PROPOSED - 1
307	75N14	THICKENING BUILDING INSTRUMENT LOOP WIRING SCHEMATICS - PROPOSED - 2
308	75N15	THICKENING BUILDING INSTRUMENT LOOP WIRING SCHEMATICS - PROPOSED - 3
309	75N16	THICKENING BUILDING BLOWER FIELD CONTROL STATION ELEVATION - PROPOSED
310	80N01	PROCESS AIR BLOWER PROCESS & INSTRUMENTATION DIAGRAM - 1
311	80N02	PROCESS AIR BLOWER PROCESS & INSTRUMENTATION DIAGRAM - 2
312	80N03	PROCESS AIR BLOWER PROCESS & INSTRUMENTATION DIAGRAM - 3
313	80N04	PROCESS AIR BLOWER PROCESS & INSTRUMENTATION DIAGRAM - 4
314	80N05	PROCESS AIR BLOWER PROCESS & INSTRUMENTATION DIAGRAM - 5
315	80N06	OPERATIONS BUILDING POWER P&ID
316	80N07	OPERATIONS BUILDING NETWORK ARCHITECTURE - RENOVATION - 1
317	80N08	OPERATIONS BUILDING NETWORK ARCHITECTURE - RENOVATION - 2
318	80N09	AERATION BLOWER "OP-PAB-001" CONTROL WIRING SCHEMATICS - RENOVATION - 1
319	80N10	AERATION BLOWER "OP-PAB-001" CONTROL WIRING SCHEMATICS - RENOVATION - 2
320	80N11	AERATION BLOWER "OP-PAB-001" CONTROL WIRING SCHEMATICS - RENOVATION - 3
321	80N12	AERATION BLOWER "OP-PAB-002" CONTROL WIRING SCHEMATICS - RENOVATION - 1
322	80N13	AERATION BLOWER "OP-PAB-002" CONTROL WIRING SCHEMATICS - RENOVATION - 2
323	80N14	AERATION BLOWER "OP-PAB-002" CONTROL WIRING SCHEMATICS - RENOVATION - 3
324	80N15	AERATION BLOWER "OP-PAB-003" CONTROL WIRING SCHEMATICS - RENOVATION - 1
325	80N16	AERATION BLOWER "OP-PAB-003" CONTROL WIRING SCHEMATICS - RENOVATION - 2
326	80N17	AERATION BLOWER "OP-PAB-003" CONTROL WIRING SCHEMATICS - RENOVATION - 3
327	80N18	BLOWER MASTER CONTROL PANEL FIELD INTERFACE WIRING SCHEMATIC - PROPOSED
328	80N19	TYPICAL BLOWER CONTROL PANEL FIELD INTERFACE WIRING SCHEMATIC - PROPOSED - 1
329	80N20	TYPICAL BLOWER CONTROL PANEL FIELD INTERFACE WIRING SCHEMATIC - PROPOSED - 2
330	80N21	TYPICAL BLOWER CONTROL PANEL FIELD INTERFACE WIRING SCHEMATIC - PROPOSED - 3
331	80N22	TYPICAL BLOWER CONTROL PANEL FIELD INTERFACE WIRING SCHEMATIC - PROPOSED - 4
332	80N23	TYPICAL CHEMICAL FEED PUMP INSTRUMENT WIRING SCHEMATICS - RENOVATION
333	80N24	TEMPERATURE INDICATING TRANSMITTER INSTRUMENT WIRING SCHEMATICS - RENOVATION
334	80N25	OP-MCP-001 120VAC POWER WIRING SCHEMATICS - RENOVATION
335	80N26	OP-MCP-001 24VDC POWER WIRING SCHEMATICS - RENOVATION
336	80N27	OP-MCP-001 AUXILIARY POWER WIRING SCHEMATICS - RENOVATION
337	80N28	OPERATIONS BUILDING MAIN CONTROL PANEL OP-MCP-001 FRONT ELEVATION - PROPOSED - 1
338	80N29	OPERATIONS BUILDING MAIN CONTROL PANEL OP-MCP-001 FRONT ELEVATION - PROPOSED - 2
339	80N30	DRY CHEMICAL FEEDER FIELD AND FLOW SWITCH FIELD INTERFACE WIRING SCHEMATIC - RENOVATION
340	80N31	OPERATIONS BUILDING EXHAUST FAN - RENOVATION
341	80N32	OPERATIONS BUILDING EXHAUST FAN - RENOVATION
342	80N33	OPERATIONS BUILDING EXHAUST FAN - RENOVATION
343	80N34	GENERATOR "OP-GEN-01" FIELD INTERFACE WIRING SCHEMATIC - RENOVATION
344	80N35	OPERATIONS BUILDING TELEPHONE SYSTEM - PROPOSED (SHEET 1 OF 2)
345	80N36	OPERATIONS BUILDING TELEPHONE SYSTEM - PROPOSED (SHEET 2 OF 2)
346	85N01	SUBSTATION NO. 1 POWER P&ID - 1
347	85N02	SUBSTATION NO. 1 POWER P&ID - 2
348	85N03	SUBSTATION NO. 1 POWER P&ID - 3
349	85N04	SUBSTATION NO. 1 HVAC P&ID
350	85N05	SUBSTATION NO. 1 NETWORK ARCHITECTURE - PROPOSED

SHEET NO.	DRAWING NO.	SHEET TITLE
		INSTRUMENTATION (CONT)
351	85N06	SWITCHBOARD "SUB1-SWBD-01" MAIN BREAKER CONTROL WIRING SCHEMATICS - PROPOSED
352	85N07	SWITCHBOARD "SUB1-SWBD-01" TIE BREAKER CONTROL WIRING SCHEMATICS - PROPOSED
353	85N08	SWITCHBOARD "SUB1-SWBD-01" FEEDER BREAKER CONTROL WIRING SCHEMATICS - PROPOSED
354	85N09	SWITCHBOARD "SUB1-SWBD-02" MAIN BREAKER CONTROL WIRING SCHEMATICS - PROPOSED
355	85N10	SWITCHBOARD "SUB1-SWBD-02" TIE BREAKER CONTROL WIRING SCHEMATICS - PROPOSED
356	85N11	SWITCHBOARD "SUB1-SWBD-02" FEEDER BREAKER CONTROL WIRING SCHEMATICS - PROPOSED
357	85N12	MOTOR CONTROL CENTER "SUB1-MCC-01" MAIN BREAKER CONTROL WIRING SCHEMATICS - PROPOSED
358	85N13	MOTOR CONTROL CENTER "SUB1-MCC-01" TIE BREAKER CONTROL WIRING SCHEMATICS - PROPOSED
359	85N14	MOTOR CONTROL CENTER "SUB1-MCC-02" MAIN BREAKER CONTROL WIRING SCHEMATICS - PROPOSED
360	85N15	MOTOR CONTROL CENTER "SUB1-MCC-02" TIE BREAKER CONTROL WIRING SCHEMATICS - PROPOSED
361	85N16	CONTROL PANEL "SUB1-CONTROLPANEL-01" POWER WIRING SCHEMATICS - PROPOSED - 1
362	85N17	CONTROL PANEL "SUB1-CONTROLPANEL-01" POWER WIRING SCHEMATICS - PROPOSED - 2
363	85N18	CONTROL PANEL "SUB1-CONTROLPANEL-01" POWER WIRING SCHEMATICS - PROPOSED - 3
364	85N19	CONTROL PANEL "SUB1-CONTROLPANEL-01" POWER WIRING SCHEMATICS - PROPOSED - 4
365	85N20	CONTROL PANEL "SUB1-CONTROLPANEL-02" POWER WIRING SCHEMATICS - PROPOSED - 1
366	85N21	CONTROL PANEL "SUB1-CONTROLPANEL-02" POWER WIRING SCHEMATICS - PROPOSED - 2
367	85N22	CONTROL PANEL "SUB1-CONTROLPANEL-02" POWER WIRING SCHEMATICS - PROPOSED - 3
368	85N23	CONTROL PANEL "SUB1-CONTROLPANEL-03" POWER WIRING SCHEMATICS - PROPOSED - 1
369	85N24	CONTROL PANEL "SUB1-CONTROLPANEL-03" POWER WIRING SCHEMATICS - PROPOSED - 2
370	85N25	MISCELLANEOUS WIRING SCHEMATICS - PROPOSED - 1
371	85N26	MISCELLANEOUS WIRING SCHEMATICS - PROPOSED - 2
372	85N27	MISCELLANEOUS WIRING SCHEMATICS - PROPOSED - 3
373	85N28	HVAC WIRING SCHEMATICS - PROPOSED
374	85N29	SUBSTATION NO. 1 INSTRUMENT LOOP WIRING SCHEMATICS - PROPOSED - 1
375	85N30	SUBSTATION NO. 1 INSTRUMENT LOOP WIRING SCHEMATICS - PROPOSED - 2
376	85N31	SUBSTATION NO. 1 MAIN CONTROL PANEL SUB1-CONTROLPANEL-01 FRONT ELEVATION - PROPOSED - 1
377	85N32	SUBSTATION NO. 1 MAIN CONTROL PANEL SUB1-CONTROLPANEL-01 FRONT ELEVATION - PROPOSED - 2
378	85N33	SUBSTATION NO. 1 MAIN CONTROL PANEL SUB1-CONTROLPANEL-02 FRONT ELEVATION - PROPOSED - 1
379	85N34	SUBSTATION NO. 1 MAIN CONTROL PANEL SUB1-CONTROLPANEL-02 FRONT ELEVATION - PROPOSED - 2
380	85N35	SUBSTATION NO. 1 MAIN CONTROL PANEL SUB1-CONTROLPANEL-03 FRONT ELEVATION - PROPOSED
381	85N36	SUBSTATION NO. 1 TELEPHONE SYSTEM - PROPOSED (SHEET 1 OF 2)
382	85N37	SUBSTATION NO. 1 TELEPHONE SYSTEM - PROPOSED (SHEET 2 OF 2)
383	90N01	ADMINISTRATION BUILDING POWER P&ID
384	90N02	ADMINISTRATION BUILDING HVAC P&ID - 1
385	90N03	ADMINISTRATION BUILDING HVAC P&ID - 2
386	90N04	ADMINISTRATION BUILDING NETWORK ARCHITECTURE - PROPOSED
387	90N05	ADMINISTRATION BUILDING EXHAUST FAN CONTROL WIRING SCHEMATICS - PROPOSED
388	90N06	ADMINISTRATION BUILDING POWER WIRING SCHEMATICS - PROPOSED - 1
389	90N07	ADMINISTRATION BUILDING POWER WIRING SCHEMATICS - PROPOSED - 2
390	90N08	ADMINISTRATION BUILDING POWER WIRING SCHEMATICS - PROPOSED - 3
391	90N09	ADMINISTRATION BUILDING POWER WIRING SCHEMATICS - PROPOSED - 4
392	90N10	ADMINISTRATION BUILDING HVAC WIRING SCHEMATICS - PROPOSED - 1
393	90N11	ADMINISTRATION BUILDING HVAC WIRING SCHEMATICS - PROPOSED - 2
394	90N12	ADMINISTRATION BUILDING INSTRUMENT LOOP WIRING SCHEMATICS - PROPOSED
395	90N13	ADMINISTRATION BUILDING MAIN CONTROL PANEL AD-CONTROLPANEL-01/2 FRONT ELEVATION - PROPOSED
396	90N14	ADMINISTRATION BUILDING MAIN CONTROL PANEL AD-CONTROLPANEL-03 FRONT ELEVATION - PROPOSED
397	90N15	ADMINISTRATION BUILDING TELEPHONE SYSTEM - PROPOSED (SHEET 1 OF 2)
398	90N16	ADMINISTRATION BUILDING TELEPHONE SYSTEM - PROPOSED (SHEET 2 OF 2)

THIS CONFORMED DOCUMENT IS RELEASED FOR THE CONVENIENCE OF THE CONTRACTOR UNDER THE AUTHORITY OF:

DANNY M HURTADO, P.E. — DATE 11-01-22
TX LIC NO. 104266

SEE DISCLAIMER FOR LIMITATIONS OF USE.

CONTRACT DOCUMENTS DATED JUNE 10, 2022, AS PART OF THE BIDDING DOCUMENTS (DRAWINGS AND SPECIFICATIONS) AND SUBSEQUENTLY ISSUED ADDENDA HAVE BEEN MERGED INTO ONE CONFORMING SET OF DOCUMENTS FOR THE CONVENIENCE OF THE CONTRACTOR. IF INCONSISTENCIES OR AMBIGUITIES BETWEEN "CONFORMED" DOCUMENTS AND CONTRACT DOCUMENTS ARE FOUND, THE CONTRACT DOCUMENTS SHALL GOVERN.

REV	DATE	BY	DESCRIPTION
			CONFORMED DOCUMENTS

DESIGNED DMH
DRAWN SDW
CHECKED JEA
DATE NOVEMBER 2022

** ORIGINAL SEALED BY DANNY M. HURTADO 06-10-22 TX PE 104266 **

carollo®
TBPELS No. F-882

CITY OF AUSTIN
WILD HORSE RANCH WWTP EXPANSION
GENERAL
DRAWING INDEX - 4

VERIFY SCALES
BAR IS ONE INCH ON ORIGINAL DRAWING
0 1"
IF NOT ONE INCH ON THIS SHEET, ADJUST SCALES ACCORDINGLY

JOB NO. 10976A.00
DRAWING NO. 00G03A
SHEET NO. 5 OF 464

PROJECT NO. 10976A10 FILE NAME: 10976A1000G003A.dgn

Plot Date: 10-OCT-2022 7:50:58 AM
User: LDietzel
PlotScale: 1:1
DesignScript: Carollo_Std_Pen_v0905.pen
ColorTable: gshade.ctb
Model: Layout1
LAST SAVED BY: ldietzel

@	AT (MEASUREMENT)	
△	DEFLECTION ANGLE, CENTRAL ANGLE	
#	NUMBER (REBAR Ø)	
A		
AB	ANCHOR BOLT	
ABC	AGGREGATE BASE COURSE	
ABS	ACRYLONITRILE BUTADIENE STYRENE	
AC	ASPHALTIC CONCRETE	
ACB	AIR CIRCUIT BREAKER	
ACI	AMERICAN CONCRETE INSTITUTE	
ACP	ASBESTOS CEMENT PIPE	
ACU	AIR CONDITIONING UNIT	
AD	AREA DRAIN	
ADDL	ADDITIONAL	
ADJ	ADJACENT, ADJUST, ADJUSTABLE	
ADMIN	ADMINISTRATION	
ADR	ACCESS DOOR	
AED	AREA EQUIPMENT DRAIN	
AER	AERAT(ION)(OR)	
AFC	AFTERCOOLER	
AFF	ABOVE FINISHED FLOOR	
AFM	AIR FLOW MONITOR	
AHU	AIR HANDLING UNIT	
AIC	AIR COMPRESSOR	
AIL	AIR INTAKE LOUVER	
ALT	ALTERNATE	
AL	ALUMINUM	
ANCH	ANCHOR	
ANV	ANGLE VALVE	
APPROX	APPROXIMATE, APPROXIMATELY	
ARCH	ARCHITECTURAL	
ARV	AIR RELEASE VALVE	
ASSY	ASSEMBLY	
ASTM	AMERICAN SOCIETY FOR TESTING AND MATERIALS	
AV	ACID VENT	
AVG	AVERAGE	
AVV	AIR AND VACUUM VALVE	
AW	ACID WASTE	
B		
BC	BEGIN CURVE, BRASS CAP, BACK OF CURB, BOLT CIRCLE	
BCKR	BACKER BOARD	
BCM	BATCHMETER	
BD	BOARD	
BDD	BACKDRAFT DAMPER	
BDR	BASIN DRAIN LINE	
BF	BLIND FLANGE	
BFG	BELOW FINISHED GRADE	
BFP	BELT FILTER PRESS	
BFV	BUTTERFLY VALVE	
BG	BREAK GLASS HAND SWITCH	
BKW	BACKWASH	
BLDG	BUILDING	
BLK	BLOCK	
BLKHD	BULKHEAD	
BLR	PROCESS BLOWER	
BM	BEAM, BENCH MARK	
BOTT	BOTTOM	
BOTTS	BOTTOM SLUDGE	
BPV	BACK PRESSURE VALVE	
BRG	BEARING	
BSP	BLACK STEEL PIPE	
BTU	BRITISH THERMAL UNITS	
BTWN	BETWEEN	
BV	BALL VALVE	
BWCCP	BAR-WRAPPED CONCRETE CYLINDER PIPE	
C		
C	CLOSE, CONDUIT CHANNEL (STRUCTURAL)	
CA	CONCRETE ANCHOR	
CAUSTIC	CAUSTIC SOLUTION (CONCENTRATED OR DILUTE)	
CB	CATCH BASIN	
CBN	EXTERNAL CARBON SOURCE	
CC	CENTER OF CURVATURE, CENTER TO CENTER	
CCB	CHLORINE CONTACT BASIN	
CD	CEILING DIFFUSER, CONDENSATE DRAIN	
CDL	CHEMICAL DRAIN LINE	
CDT	CONDUIT	
CEF	CEILING EXHAUST FAN	
CF	CUBIC FEET	
CFM	CUBIC FEET PER MINUTE	
CFS	CUBIC FEET PER SECOND	
CHEMD	CHEMICAL DRAIN	
CHF	CHEMICAL FEEDER	
CHKD PL	CHECKERED PLATE	
CI	CAST IRON	
CIP	CAST IRON PIPE	
CIRC	CIRCUMFERENTIAL/CIRCUMFERENCE	
CJ	CONSTRUCTION JOINT	
CKA	CHECK VALVE, ANGLE	
CKB	CHECK VALVE, BALL	
CKF	CHECK VALVE, FLAP	
CKS	CHECK VALVE, SWING	
CL	CENTER LINE	
CLK	CHAIN LINK	
CLD	CHLORINE LEAK DETECTOR	
CLL	CHLORINE LIQUID	
CLP	CHLORINE GAS (PRESSURE)	
CLR	CLEAR	
CLS	CHLORINE SOLUTION	
CLSM	CONTROLLED LOW STRENGTH MATERIAL	
CLV	CHLORINE GAS (VACUUM)	
CML	CEMENT MORTAR LINED	
CMLC	CEMENT MORTAR LINED AND COATED	
CMP	CORRUGATED METAL PIPE	
CMU	CONCRETE MASONRY UNIT	
CNV	CONVEYOR	
CO	CLEANOUT	
COL(S)	COLUMN(S)	
CONC	CONCRETE	
CONN	CONNECT, CONNECTION	
CONST	CONSTRUCTION	
CONT	CONTINUOUS OR CONTINUATION OR (D) (OUS)	
CORR	CORRUGATE(D), CORROSION	
CP	CONTROL POINT	
CPLG	COUPLING	
CPT	CARPET	
CPVC	CHLORINATED POLYVINYL CHLORIDE	
CS	CARBON STEEL, CIRCULATING SLUDGE	
CSP	CHEMICAL SUMP PUMP, CORRUGATED STEEL PIPE	
CT	CURRENT TRANSFORMER, CERAMIC TILE	
CTJ	CONTROL JOINT	
CTL	CONTROL	
CTR	CENTER, CENTERED	
CTSK	COUNTERSUNK	
CU	CUBIC	
CUP	COPPER PIPE	
CV	CHECK VALVE	
CW	COLD WATER	
CWV	COMBINATION WASTE AND VENT	
CY	CUBIC YARD	
D		
D	DEPTH, DIGITAL OR DISCRETE, DRAIN	
D/W	DRIVEWAY	
DBL	DOUBLE	
DDR	DESICCANT DRYER	
DEG or °	DEGREE	
DEMO	DEMOLISH, DEMOLITION	
DET	DETAIL	
DFL	DECANT/FILTRATE	
DG	DOOR GRILLE	
DIA or Ø	DIAMETER	
DIAG	DIAGONAL	
DIF	DIFFUSER	
DIG	DIGESTER	
DIM	DIMENSION	
DIP	DUCTILE IRON PIPE	
DISCH	DISCHARGE	
DIW	DEIONIZED WATER	
DL	DEAD LOAD, DRAIN LINE	
DLV	DOOR LOUVER	
DMP	DAMPER	
DMS	DIAPHRAGM SEAL	
DN	DOWN	
do	DITTO	
DO	DOOR OPENING	
DP	DEEP (OR DEPTH)	
DPV	DIAPHRAGM VALVE	
DR	DOOR, DRAIN	
DRT	DRIP TRAP	
DRV	DRAIN VALVE	
DS	DIGESTED SLUDGE, DOWN SPOUT	
DSW	DISTILLED WATER, DOOR SWITCH	
DUC	DUST COLLECTOR	
DUH	DUCT HEATER UNIT	
DW	DISTILLED WATER	
DWD	DEWATERING DRAIN	
DWG(S)	DRAWING(S)	
DWL(S)	DOWEL(S)	
E		
E	EAST	
EA	EACH	
EC	END OF CURVE	
ECC RED	ECCENTRIC REDUCER	
ECU	EVAPORATOR COOLING UNIT	
ED	EQUIPMENT DRAIN	
EF	EXHAUST FAN, EACH FACE	
EFF	EFFLUENT	
EG	EXHAUST GRILLE	
EIFS	EXTERIOR INSULATION AND FINISH SYSTEM	
EJ	EXPANSION JOINT	
EJR	INJECTOR/EDUCTOR	
EL	ELEVATION	
ELEC	ELECTRICAL	
ELL	ELBOW	
EMBED	EMBEDMENT	
EMH	ELECTRICAL MANHOLE	
EP	EDGE OF PAVEMENT	
EPS	EXPANDED POLYSTYRENE	
EPV	ECCENTRIC PLUG VALVE	
EQ	EQUAL	
EQUIP	EQUIPMENT	
ER	EXHAUST REGISTER	
ES	EACH SIDE	
ESEW	EMERGENCY SHOWER AND EYE WASH	
ESS	EMERGENCY HAND SWITCH	
ET	ELECTRICALLY HEAT TRACED	
EUH	ELECTRIC UNIT HEATER	
EVR	EVAPORATOR	
EW	EACH WAY	
EWC	ELECTRIC WATER COOLER	
EWEF	EACH WAY EACH FACE	
EWH	ELECTRIC WATER HEATER, EXHAUST	
EX	EXISTING	
EXIST	EXISTING	
EXP	EXPANSION, EXPANSION TANK	
EXPO	EXPOSED	
EXT	EXTERIOR	
F		
FACT	FACTORY	
FAD	FOUL AIR DUCT	
FB	FLAT BAR	
FBW	FILTER BACKWASH	
FC	FACE OF CURB, FLEXIBLE COUPLING	
FCA	FLANGE COUPLING ADAPTER	
FCO	FLOOR CLEANOUT	
FCU	FAN COIL UNIT	
FD	FIRE DAMPER, FLOOR DRAIN, FOUND	
FDC	FIRE DEPARTMENT CONNECTION	
FDL	FLOOR DRAIN LINE	
FDR	FEEDER	
FEFF	FINAL EFFLUENT	
FG	FLAP GATE, FINAL GRADE	
FH	FIRE HYDRANT	
FILT	FILTRATE	
FIN	FINISH	
FIN FL	FINISHED FLOOR	
FIN GR	FINISHED GRADE	
FL	FLOOR, FLOW LINE	
FLA	FOUL AIR	
FLD	FILTER DRAIN	
FLE	FILTER EFFLUENT	
FLEX	FLEXIBLE	
FLG	FLANGE, OR FLANGED	
FLR	FILTER	
FM	FORCE MAIN	
FND	FOUNDATION	
FO	FUEL OIL	
FOB	FLAT ON BOTTOM	
FOT	FLAT ON TOP	
FPM	FEET PER MINUTE	
FPP	FLEXIBLE PLASTIC PIPE	
FRP	FIBERGLASS REINFORCED PLASTIC	
FRPP	FIBERGLASS REINFORCED PLASTIC PIPE	
FRS	FROTH SPRAY	
FS	FAR SIDE	
FSTN	FASTEN(ED)	
FT or '	FOOT, FEET	
FTG	FOOTING	
FUP	FUEL DISPENSER	
FV	FLAP VALVE	
FW	FLUSHING WATER	
FX	FIRE EXTINGUISHER	
FXC	FIRE EXTINGUISHER CABINET	
FXE	FIRE EXTINGUISHER - ELECTRICAL	
G		
G	GAS, GROUND, GUTTER	
GA	GAUGE or GAGE	
GAL	GALLONS	
GALV	GALVANIZE(D)	
GAV	GRAVITY VENTILATOR	
GB	GRADE BREAK	
GBT	GRAVITY BELT THICKENER	
GC	GROOVED COUPLING	
GEL	GRAVITY EXHAUST LOUVER	
GEN	GENERAL, GENERATOR	
GL	GLASS	
GLV	GLOBE VALVE	
GM	GAS METER	
GND	GROUND	
GPD	GALLONS PER DAY	
GPM	GALLONS PER MINUTE	
GR	GRADE	
GRTG	GRATING	
GRV	GRAVITY VENTILATOR	
GSP	GALVANIZED STEEL PIPE	
GV	GATE VALVE	
GYP	GYPSUM	
H		
H	EXPLOSION-PROOF, HIGH, HORIZONTAL	
H1E	HOOK ONE END	
H2E	HOOK TWO ENDS	
HAS	HEADED ANCHOR STUD	
HB	HOSE BIBB	
HDPE	HIGH DENSITY POLYEHTYLENE	
HDW	HARDWARE	
HDWL	HEADWALL	
HEF	HOOD EXHAUST FAN	
HGT	HEIGHT	
HORIZ	HORIZONTAL	
HP	HEAT PUMP, HORSEPOWER, HIGH PRESSURE	
HPA	HIGH PRESSURE AIR	
HPT	HIGH POINT	
HPU	HEAT PUMP UNIT AIR	
HR	HANDRAIL, HOSE REEL, HOUR	
HSF	HOOD SUPPLY FAN	
HSS	HOLLOW STRUCTURAL SECTION (STEEL)	
HTX	HEAT EXCHANGER	
HV	HOSE VALVE	
HW	HOT WATER	
HWL	HIGH WATER LEVEL	
HWR	HOT WATER RETURN	
HWS	HOT WATER SUPPLY	
HxW	HEIGHT BY WIDTH	
HYD	HYDRANT	
I		
IA	INSTRUMENT AIR	
ID	INSIDE DIAMETER, INSIDE DIMENSION, IDENTIFICATION	
I.F.	INSIDE FACE	
IN or "	INCHES	
INCL	INCLUDE, INCLUDING	
INF	INFLUENT	
INJ	INJECTOR	
INSTR	INSTRUMENTATION	
INSUL	INSULAT(E)(ED)(ING)(ION)	
INT	INTERIOR	
INV	INVERT	
IP	IRON PIPE	
ISR	INTRINSICALLY SAFE RELAY	
J		
JST	JOIST	
JT	JOINT	
K		
KGV	KNIFE GATE VALVE	
L		
L	ANGLE (STRUCTURAL), LENGTH, LOUVER	
LAB	LABORATORY	
LAV	LAVATORY	
LB(S)	POUND(S)	
LDF	LIQUID DIESEL FUEL	
LDFR	LIQUID DIESEL FUEL RETURN	
LF	LINEAL FEET	
LG	LONG	
LH	LEFT HAND	
LHR	LEFT HAND REVERSE	
LHRA	LEFT HAND REVERSE ACTIVE	
LHRB	LEFT HAND REVERSE BEVEL	
LL	LIVE LOAD	
LLH	LONG LEG HORIZONTAL	
LLV	LONG LEG VERTICAL	
LP	LOW PRESSURE	
LPA	LOW PRESSURE AIR	
LPG	LIQUIFIED PROPANE GAS	
LPT	LOW POINT	
LR	LONG RADIUS	
LS	LAB SINK	
LT	LEFT	
LWL	LOW WATER LEVEL	
M		
M	MOTOR	
MAINT	MAINTENANCE	
MAN	MANUAL	
MASY	MASONRY	
MATL	MATERIAL	
MAU	MAKE-UP AIR UNIT	
MAX	MAXIMUM	
MB	MACHINE BOLT	
MC	MECHANICAL COUPLING	
MCJ	MASONRY CONTROL JOINT	
MD	MOTORIZED DAMPER	
MECH	MECHANICAL	
MET	METAL	
MFR	MANUFACTURER	
MG/L	MILLIGRAMS PER LITER	
MGD	MILLION GALLONS PER DAY	
MH	MANHOLE	
MIN	MINIMUM	
MISC	MISCELLANEOUS	
MIX	MIXER	
MJ	MECHANICAL JOINT	
MK	MARK	
ML	MIXED LIQUOR	
MO	MASONRY OPENING	
MOD	MODIFIED	
MOIST	MOISTURE	
MON	MONUMENT	
MOS	MOISTURE SEPARATOR	
MPM	METERING PUMP	
MS	MOP SINK	
MTD	MOUNTED	
N		
N	NORTH, NEUTRAL	
NA	NOT APPLICABLE	
NC	NORMALLY CLOSED	
NEV	VALVE, NEEDLE	
NG	NATURAL GRADE, NATURAL OR LP GAS	
NIC	NOT IN CONTRACT	
NO., #	NUMBER	
NOM	NOMINAL	
NPT	NATIONAL PIPE THREAD	
NPW	NON-POTABLE WATER	
NS	NEAR SIDE	
NTS	NOT TO SCALE	
O		
O	OPEN	
OBD	OPPOSED BLADE DAMPER	
OC	ON CENTER	
OD	OUTSIDE DIAMETER, OUTSIDE DIMENSION	
OED	OPEN EQUIPMENT DRAIN	
O.F.	OUTSIDE FACE	
OFL	OVERFLOW	
OPNG	OPENING	
OPP	OPPOSITE	
OPP HND	OPPOSITE HAND	
OZ	OUNCE	
P		
P	POLE	
PBL	POLYMER BLENDER	
PC	POINT OF CURVATURE	
PCC	PLANT CONTROL CENTER	
PCCP	PRESTRESSED CONCRETE CYLINDER PIPE	
PCP	PROGRESSIVE CAVITY PUMP	
PD	POSITIVE DISPLACEMENT, PLANT DRAIN	
PD, PLD	PULSATION DAMPENER	
PDP	POSITIVE DISPLACEMENT PUMP	
PE	PLAIN END	
PERP	PERPENDICULAR	
PG	PRESSURE GAUGE	
PH	PHASE, PHYSICALLY HANDICAPPED	
PI	POINT OF INTERSECTION	
PIV	POST INDICATOR VALVE	
PL	PLATE, PROPERTY LINE	
PLAS	PLASTIC	
PLCS	PLACES	
PLS	POLYMER SOLUTION	
PLWD	PLYWOOD	
PMP	PUMP	
PNL(S)	PANEL(S)	
POL	POLYMER	
POLY	POLYETHYLENE	
POS	POSITION	
POW	POTABLE WATER	
PP	POWER POLE	
PPMV	PARTS PER MILLION (VOLUME)	
PRC	POINT OF REVERSE CURVATURE	
PREFAB	PREFABRICATED	
PRG	PRESSURE REGULATOR	
PRI	PRIMARY	
PROJ	PROJECTION	
PRR	PRESSURE OR VACUUM RELIEF VALVE	
PRV	PRESSURE REDUCING VALVE, PRESSURE REGULATION VALVE, PRESSURE RELIEF VALVE	
PS	PUMP STATION, PIPE SUPPORT	
PSF	POUNDS PER SQUARE FOOT	
PSG	PRESSURE GAUGE	
PSI	POUNDS PER SQUARE INCH	
PSIG	POUNDS PER SQUARE INCH GAUGE	
PT	POINT, POINT OF TANGENCY	
PV	PLUG VALVE	
PVC	POINT OF VERTICAL CURVATURE, POLYVINYL CHLORIDE	
PVDF	POLYVINYLIDENEFLUORIDE	
PVI	POINT OF VERTICAL INTERSECTION	
PVMT	PAVEMENT	
PVT	POINT OF VERTICAL TANGENCY	
PLW	PLANT WATER	
Q		
QTY	QUANTITY	
R		
R/W	RIGHT OF WAY	
RAD	RADIUS, RADIAL	
RAS	RETURN ACTIVATED SLUDGE	
RCP	REINFORCED CONCRETE PIPE	
RCCP	REINFORCED CONCRETE CYLINDER PIPE	
RD	ROOF DRAIN, RECORD DRAWINGS	
RDL	ROOF DRAIN LINE	
RDOF	ROOF DRAIN OVERFLOW	
RECIRC	RECIRCULATING	
RED	REDUCER, ROOF EQUIPMENT DRAIN	
REF	REFERENCE	
REG	REGULATOR, REGULATING	
REINF	REINFORCE(D)(ING)(MENT)	
REJ	RUBBER EXPANSION JOINT	
REQD	REQUIRED	
RER	REACTOR	
RES	RESERVOIR	
REV	REVISION, REVERSE	
RF	RETURN FAN	
RG	RETURN GRILLE RUBBER GASKET	
RH	RIGHT HAND	
RHR	RIGHT HAND REVERSE	
RHRA	RIGHT HAND REVERSE ACTIVE	
RHRB	RIGHT HAND REVERSE BEVEL	
RLS	REGISTERED LAND SURVEYOR	
RM	ROOM	
RO	ROUGH OPENING	
ROT	ROTAMETER	
RP	RADIUS POINT	
RPM	REVOLUTIONS PER MINUTE	
RPMP	REINFORCED PLASTIC MORTAR PIPE	
RR	RETURN REGISTER	
RSR	RISER	
RT	RIGHT	
RTF	ROTARY FEEDER	
RTU	ROOF TOP UNIT	
RUD	RUPTURE DISK	
RW	RECLAIMED WATER, REUSE WATER	
RWR	RECLAIMED WATER RETURN	
RWW	RAW WASTEWATER	
S		
S/W	SIDEWALK	
S	SOUTH, SWITCH, SLOPE	
SA	SAMPLE	
SC	SECONDARY CLARIFIER	
SCB	SCRUBBER	
SCD	SMOKE CONTROL DAMPER	
SCFM	STANDARD CUBIC FEET PER MINUTE	
SCH	SCHEDULE	
SCO	SURFACE CLEANOUT	
SCR	BAR SCREEN	
SCR	SILICON CONTROL RECTIFIER	
SD	SMOKE DETECTOR, SPLITTER DAMPER, STORM DRAIN	
SDL	SUMP DISCHARGE DRAIN LINE	
SDO	SLUDGE DRAWOFF	
SE	SECONDARY EFFLUENT	
SEC	SECONDARY, SECOND	
SECT	SECTION	
SED	SEDIMENTATION	
SEP	SEPTAGE	
SES	SURVEYED ELEVATION OF EXISTING STRUCTURE	
SF	SUPPLY FAN	
SFW	SOFTENED WATER	
SG	SUPPLY GRILLE	
SGS	STORE FRONT GLAZING SYSTEM	
SHD	SHOWER DRAIN	
SHDR	SOLIDS HANDLING-RECYCLE	
SHR	SHOWER	
SHT	SHEET	
SIM	SIMILAR	
SK	SKIMMINGS	
SL	SLOPE, SLUDGE	
SLC	SLUDGE COLLECTOR DRIVE	
SLG	SLIDE GATE	
SLV	SLEEVE VALVE	
SMP	SAMPLER, SUMP PUMP	
SN	SUPERNATANT OR SUBNATANT	
SOL	SOLUTION	
SP	STATIC PRESSURE, SET POINT	
SPD	SUMP PUMP DRAIN	
SPDT	SINGLE POLE DOUBLE THROW	
SPEC(S)	SPECIFICATION(S)	
SPL	SPLITTER BOX	
SPR	SPARE	
SPS	SAMPLE SINK	
SPW	SAMPLE WATER	
SQ	SQUARE	
SQ FT	SQUARE FEET	
SQ IN(S)	SQUARE INCH(ES)	
SR	SHORT RADIUS, SUPPLY REGISTER	
SRL	SCRUBBER RECIRCULATION LIQUID (CAUSTIC)	
SS	SANITARY SEWER, SELECTOR SWITCH	
SSK	SERVICE SINK	
SSL	SECONDARY SLUDGE	
SST	STAINLESS STEEL	
ST	SLUDGE TRANSFER	
STA	STATION	
STB	STABILIZER	
STD(S)	STANDARDS(S)	
STIFF	STIFFENER	
STIR	STIRRUPS	
STL	STEEL	
STM	STEAM	
STP	STEEL PIPE	
STR	STRAINER	
STRUCT	STRUCTURAL	
SUG	SLUICE GATE	
SUPT	PIPE SUPPORT, SUPPORT	
SV	SERVICE VALVE, SHUTOFF VALVE, SOLENOID VALVE	
SW	SANITARY WASTE	
SWR	SEAL WATER	
SYM	SYMMETRICAL	
SYN	SYNTHETIC	
T		
T	TANGENT LENGTH, THERMOSTAT, TIMER	
T&B	TOP AND BOTTOM	
TAS	THREADED ANCHOR STUD	
TBM	TEMPORARY BENCHMARK	
TC	TOP OF CURB	
TCV	TEMPERATURE CONTROL VALVE	
TDH	TOTAL DYNAMIC HEAD	
TDR	TIME DELAY RELAY, TOWEL DISPENSER/RECEPTACLE	
TEL	TELEPHONE	
TH	TEST HOLE	
THK	THICKENER, THICKNESS, THICK	
TKS	THICKENED SLUDGE	
TLV	TELESCOPING VALVE	
TMH	TELEPHONE MANHOLE	
TMP	TEMPERATURE	
TNK	TANK	
T.O.	TOP OF	
TOC	TOP OF CONCRETE	
TOG	TOP OF GRATING	
TOM	TOP OF MASONRY	
TOS	TOP OF STEEL	
T.O.W.	TOP OF WALL	
TR	TRIAD (THREE CONDUCTOR SHIELDED CABLE), TIMING RELAY	
TRD	TREAD	
TS	THICKENER SUPERNATANT OR SUBNATANT	
TSD	THICKENED SLUDGE DECANT	
TSPL	TURBIDIMETER SAMPLE	
TSTAT	THERMOSTAT	
TTB	TELEPHONE TERMINAL BOARD	
TUR	TURBINE	
TV	TURNING VANES	
TWV	THREE-WAY VALVE	
TYP	TYPICAL	
U		
UC	UNDERCUT	
UG	UNDERGROUND	
UHMWPE	ULTRA HIGH MOLECULAR WEIGHT POLYETHYLENE	
UHMW	ULTRA HIGH MOLECULAR WEIGHT	
UNO	UNLESS NOTED OTHERWISE	
US	UTILITY SINK	
UV	ULTRAVIOLET	
V		
V	VALVE	
VAR	VARIES	
VB	VALVE BOX	
VCP	VITRIFIED CLAY PIPE	
VEC	VINYL ESTER COATING	
VERT	VERTICAL	
VFR	VOLUMETRIC FEEDER	
VG	VACUUM GAUGE, VALLEY GUTTER	
VOL	VOLUME	
VRV	VACUUM REGULATING VALVE	
VTR	VENT THROUGH ROOF	
W		
W	WEST, WIDTH	
W/	WITH	
W/O	WITHOUT	
WAS	WASTE ACTIVATED SLUDGE	
WCO	WALL CLEANOUT	
WEF	WALL EXHAUST FAN	
WF	WALL FITTING, WASH FOUNTAIN	
WH	WATER HEATER	
WI	WEIGHT INDICATOR	
WL	WALL LOUVER, WATER LEVEL	
WM	WATER METER	
WOD	WASTE OIL DRAIN	
WP	WEATHERPROOF, WATERPROOF	
WPT	WORKING POINT	
WRG	WEIR GATE	
WRS	WATER SOFTENER	
WS	WATER SURFACE	
WSTP	WATERSTOP	
WT	WALK THROUGH, WEIGHT	
WTF	WATER TREATMENT FACILITY	
WTP	WATER TREATMENT PLANT	
WTR	WATER	
WV	WATER CONTROL VALVE	
WW	WASTEWATER	
WWF	WELDED WIRE FABRIC	
WWTF	WASTEWATER TREATMENT FACILITY	
WWTP	WASTEWATER TREATMENT PLANT	
Y		
Y	WYE	
YCO	YARD CLEANOUT	
YH	YARD HYDRANT	

THIS CONFORMED DOCUMENT IS RELEASED FOR THE CONVENIENCE OF THE CONTRACTOR UNDER THE AUTHORITY OF:

DANNY M HURTADO, P.E. — 11-01-22 DATE
TX LIC NO. 104266

SEE DISCLAIMER FOR LIMITATIONS OF USE.

CONTRACT DOCUMENTS DATED JUNE 10, 2022, AS PART OF THE BIDDING DOCUMENTS (DRAWINGS AND SPECIFICATIONS) AND SUBSEQUENTLY ISSUED ADDENDA HAVE BEEN MERGED INTO ONE CONFORMING SET OF DOCUMENTS FOR THE CONVENIENCE OF THE CONTRACTOR. IF INCONSISTENCIES OR AMBIGUITIES BETWEEN "CONFORMED" DOCUMENTS AND CONTRACT DOCUMENTS ARE FOUND, THE CONTRACT DOCUMENTS SHALL GOVERN.

REV	DATE	BY	DESCRIPTION
			CONFORMED DOCUMENTS

DESIGNED DMH
DRAWN LGD
CHECKED JEA
DATE NOVEMBER 2022

** ORIGINAL SEALED BY DANNY M. HURTADO 06-10-22 TX PE 104266 **

carollo®
TBPELS No. F-882

CITY OF AUSTIN — FOUNDED 1839

CITY OF AUSTIN

CITY OF AUSTIN
WILD HORSE RANCH WWTP EXPANSION
GENERAL
ABBREVIATIONS

VERIFY SCALES
BAR IS ONE INCH ON ORIGINAL DRAWING
0 1"
IF NOT ONE INCH ON THIS SHEET, ADJUST SCALES ACCORDINGLY

JOB NO. 10976A.00
DRAWING NO. 00G04
SHEET NO. 6 OF 464

PROJECT NO. 10976A10 FILE NAME: 10976A1000G004.dgn

Plot Date: 10-OCT-2022 7:56:07 AM
User: LDietzel
PlotScale: 1:1
DesignScript: Carollo_Std_Pen_v0905.pen
ColorTable: gshade.ctb
Model: Layout1
LAST SAVED BY: ldietzel

GENERAL NOTES

1. CONTRACTOR SHALL PROTECT THE EXISTING SURVEY MONUMENTS AND SHALL REPLACE ANY MONUMENTS AT CONTRACTORS EXPENSE THAT THE CONTRACTOR DAMAGES.
2. ALL UTILITIES SHALL BE PROTECTED UNLESS SHOWN TO BE REMOVED. CONTRACTOR SHALL REPAIR ANY UTILITIES AT CONTRACTORS EXPENSE THAT THE CONTRACTOR DAMAGES.
3. ALL KNOWN EXISTING BURIED PIPING, ELECTRICAL DUCT BANKS AND OTHER UTILITIES ARE SHOWN IN THE APPROXIMATE LOCATION AND ARE FOR INFORMATIONAL PURPOSES TO INDICATE THE EXISTENCE OF SUCH UTILITIES. CONTRACTOR SHALL BE RESPONSIBLE FOR LOCATING AND EXPOSING BURIED PIPE, ELECTRICAL DUCT BANK AND OTHER ON SITE UTILITIES PRIOR TO COMMENCING WORK.
4. THE CONTRACTOR SHALL VERIFY ALL DIMENSIONS BEFORE STARTING WORK AND SHALL IMMEDIATELY NOTIFY THE ENGINEER OF ANY DISCREPANCIES.
5. WHERE CONSTRUCTION DETAILS ARE SHOWN OR NOTED FOR ANY PART OF THE WORK, DETAILS SHALL BE THE SAME FOR OTHER SIMILAR WORK.
6. UNLESS DETAILED, SPECIFIED OR INDICATED OTHERWISE, CONSTRUCTION SHALL BE AS INDICATED IN THE APPLICABLE TYPICAL DETAILS AND GENERAL NOTES. TYPICAL DETAILS ARE MEANT TO APPLY EVEN THOUGH NOT REFERENCED AT SPECIFIC LOCATIONS OR IN SPECIFIC DRAWINGS.
7. MINIMUM COVER OVER ALL BURIED PIPING SHALL BE 3'-0" UNLESS OTHERWISE SHOWN OR APPROVED BY ENGINEER. OR UNLESS OTHERWISE SPECIFIED BY THE CITY OF AUSTIN UTILITY CRITERIA MANUALS.
8. CONTRACTOR SHALL ONLY USE THE DESIGNATED GATE FOR ENTRANCE INTO THE PLANT SITE.
9. CONSTRUCT A SILT FENCE AS SHOWN IN COMPLIANCE WITH BEST PRACTICES AND AUSTIN ENVIRONMENTAL CRITERIA MANUAL SECTION 1.4.5.G. CONTRACTOR SHALL MAINTAIN THE SILT FENCE IN GOOD AND PROPER ORDER THROUGHOUT THE CONSTRUCTION PERIOD.
10. REPAIR OR REPLACE ALL LANDSCAPING AND IRRIGATION FACILITIES THAT ARE DISTURBED DURING CONSTRUCTION. SEE SPEC SECTIONS 02810 AND 02900 FOR REQUIREMENTS.
11. CONTRACTOR SHALL PROVIDE TEMPORARY SURFACING OF ALL EXCAVATED AREAS WITHIN ROADWAY IMMEDIATELY AFTER COMPLETING THE BACKFILLING.
12. EXCAVATIONS IN ROADWAY SHALL BE COVERED WITH STEEL PLATES (NON-SKID SURFACE TYPE) AT THE CLOSE OF EACH WORKING DAY.
13. VEGETATION CLEARING OR TRAMPLING SHOULD BE PERFORMED OUTSIDE OF THE MIGRATORY BIRD NESTING SEASON (MARCH 15 1 - SEPTEMBER15). IF CONSTRUCTION ACTIVITIES MUST BE SCHEDULED DURING THE NESTING SEASON, NESTING SURVEYS SHOULD BE CONDUCTED BY A QUALIFIED BIOLOGIST PRIOR TO VEGETATION CLEARING DURING THE BREEDING SEASON. IF ACTIVE NESTS ARE OBSERVED, A 150-FT BUFFER OF VEGETATION WILL REMAIN UNDISTURBED AROUND THE NESTS UNTIL THE YOUNG HAVE FLEDGED OR THE NEST IS ABANDONED.
14. TRENCHES SHOULD NOT BE LEFT OPEN OVERNIGHT IN THE PROJECT AREA IN ORDER TO PREVENT WILDLIFE FROM POTENTIALLY BEING TRAPPED. IF TRENCHES MUST BE LEFT UNFILLED AT THE END OF THE WORK DAY, THEY SHOULD EITHER BE COVERED OR HAVE ESCAPE RAMPS PLACED IN THEM (FASHIONED FROM BOARDS OR SOIL). ALSO, ANY TRENCHES LEFT OPEN OVERNIGHT SHOULD BE INSPECTED THE FOLLOWING MORNING FOR WILDLIFE THAT MAY HAVE BEEN TRAPPED. IF ANY STATE-LISTED SPECIES ARE TRAPPED IN TRENCHES, THEY SHOULD BE REMOVED BY PERSONNEL PERMITTED BY TEXAS PARKS AND WILDLIFE DEPARTMENT TO HANDLE STATE-LISTED SPECIES.
15. IF ARCHEOLOGICAL SITES OR HISTORIC STRUCTURES ARE DISCOVERED AFTER CONSTRUCTION OPERATIONS ARE BEGUN, THE CONTRACTOR SHALL IMMEDIATELY CEASE OPERATIONS IN THAT PARTICULAR AREA AND NOTIFY THE OWNER, THE TWDB, AND THE TEXAS HISTORICAL COMMISSION, 1511 N. COLORADO ST., P.O. BOX 12276, CAPITOL STATION, AUSTIN, TEXAS 78711-2276. THE CONTRACTOR SHALL TAKE STEPS TO PROTECT AND PRESERVE THE DISCOVERIES UNTIL THEY HAVE BEEN INSPECTED BY THE OWNER'S REPRESENTATIVE AND THE TWDB.
16. IF A THREATENED OR ENDANGERED SPECIES IS ENCOUNTERED DURING CONSTRUCTION, THE CONTRACTOR SHALL IMMEDIATELY CEASE WORK IN THE AREA OF THE ENCOUNTER AND NOTIFY THE OWNER, WHO WILL IMMEDIATELY IMPLEMENT ACTIONS IN ACCORDANCE WITH THE ESA AND APPLICABLE STATE STATUTES. THE CONTRACTOR SHALL NOT RESUME CONSTRUCTION IN THE AREA OF THE ENCOUNTER UNTIL AUTHORIZED TO DO SO BY THE OWNER.
17. ENVIRONMENTAL CATEGORICAL EXCLUSION MITIGATIVE MEASURES -
PER THE DETERMINATION OF NO EFFECT ISSUED ON MARCH 6, 2013, THE PROJECT ACTIVITIES MUST COMPLY WITH THE FOLLOWING CONDITIONS:
- STANDARD EMERGENCY CONDITIONS FOR THE DISCOVERY OF THREATENED OR ENDANGERED SPECIES; AND - STANDARD EMERGENCY CONDITIONS FOR THE DISCOVERY OF CULTURAL RESOURCES
18. PROVIDE SAFETY SIGNS AS SPECIFIED IN ARCHITECTURAL DESIGN.

DRAWING SYMBOLOGY

PLAN TITLE

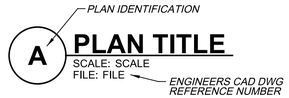

SECTION CUT OR DETAIL

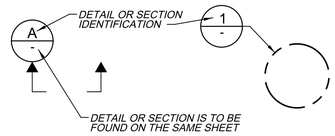

SECTION CUT OR DETAIL

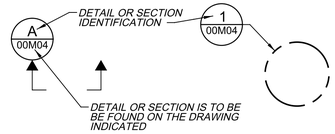

SECTION or DETAIL TITLE w/ REFERENCE

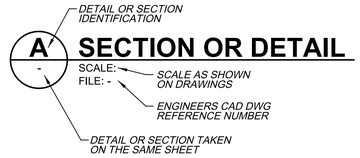

TYPICAL DETAIL REFERENCE

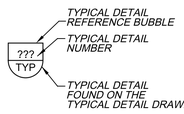

EQUIPMENT TAGGING NOTE — (#)

ROOM or AREA DESIGNATION — (#)

DOOR OPENING DESIGNATION — (#) *DOOR #, SEE SCHEDULE FOR SIZE, ETC*

ELEVATION VIEW OR PHOTO LOCATION — A / 00M04

KEY NOTE — 34

FLOW STREAM IDENTIFIER

WTP FLUID CODES

CODE		DESCRIPTION
AIR	=	AERATION AIR
ALM	=	ALUM
BSB	=	BAR SCREEN BYPASS
CBN	=	EXTERNAL CARBON SOURCE
CO	=	CLASSIFIER OVERFLOW
DR	=	DRAIN
DSL	=	DIGESTED SLUDGE
DWSL	=	DEWATERED SOLIDS
FA	=	FOUL AIR
FE	=	FILTER EFFLUENT
FIL	=	THICKENER FILTRATE
FM	=	FORCE MAIN
FW	=	FIRE WATER
GBB	=	GRIT BASIN BYPASS
GR	=	GRIT SLURRY
ML	=	MIXED LIQUOR
NPW	=	NON-POTABLE WATER
OF	=	OVERFLOW
PLY	=	POLYMER
PD	=	PUMPED DRAINAGE
PE	=	PLANT EFFLUENT
PW	=	POTABLE WATER
PS	=	PUMP STATION
RAS	=	RETURN ACTIVATED SLUDGE
REC	=	RECYCLE FLOW
RI	=	RAW INFLUENT
RS	=	RAW SEWAGE
S	=	SCREENINGS
SB	=	SCREENINGS WASHER/COMPACTOR BYPASS
SC	=	SCUM
SSC	=	SECONDARY SCUM
SE	=	SECONDARY EFFLUENT
SI	=	SCREENED INFLUENT
TWAS	=	THICKENED WASTE ACTIVATED SLUDGE
WAS	=	WASTE ACTIVATED SLUDGE
WCO	=	WASHER COMPACTOR OVERFLOW

THIS CONFORMED DOCUMENT IS RELEASED FOR THE CONVENIENCE OF THE CONTRACTOR UNDER THE AUTHORITY OF:

11-01-22

DANNY M HURTADO, P.E. DATE
TX LIC NO. 104266

SEE DISCLAIMER FOR LIMITATIONS OF USE.

CONTRACT DOCUMENTS DATED JUNE 10, 2022, AS PART OF THE BIDDING DOCUMENTS (DRAWINGS AND SPECIFICATIONS) AND SUBSEQUENTLY ISSUED ADDENDA HAVE BEEN MERGED INTO ONE CONFORMING SET OF DOCUMENTS FOR THE CONVENIENCE OF THE CONTRACTOR. IF INCONSISTENCIES OR AMBIGUITIES BETWEEN "CONFORMED" DOCUMENTS AND CONTRACT DOCUMENTS ARE FOUND, THE CONTRACT DOCUMENTS SHALL GOVERN.

IDENTIFICATION SYMBOLS

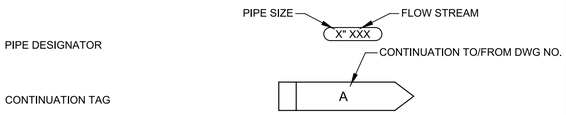

EQUIPMENT / VALVE TAG

POSITION CODE
MAIN PIECE OF EQUIPMENT PER INFOR TAGGING CODE

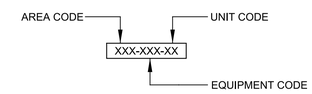

SUBCOMPONENT CODE
SUBCOMPONENT OF A POSITION PER INFOR TAGGING CODE

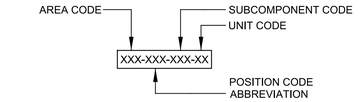

LINE SYMBOLS

PIPE ABOVE OR BELOW GROUND

PIPE UNDERNEATH SLAB OR STRUCTURE

FUTURE

EXISTING

DEMO

PROCESS LINE SYMBOLS

PRIMARY PROCESS FLOW IN PIPE

SECONDARY PROCESS FLOW IN PIPE

PRIMARY PROCESS FLOW IN CHANNEL

SECONDARY PROCESS FLOW IN CHANNEL

REV	DATE	BY	DESCRIPTION
			CONFORMED DOCUMENTS

DESIGNED DMH
DRAWN LGD
CHECKED JEA
DATE NOVEMBER 2022

** ORIGINAL SEALED BY DANNY M. HURTADO 06-10-22 TX PE 104266 **

carollo® TBPELS No. F-882

CITY OF AUSTIN — FOUNDED 1839

CITY OF AUSTIN

CITY OF AUSTIN
WILD HORSE RANCH WWTP EXPANSION
GENERAL
GENERAL NOTES, LEGEND AND SYMBOLS

VERIFY SCALES
BAR IS ONE INCH ON ORIGINAL DRAWING
0 1"
IF NOT ONE INCH ON THIS SHEET, ADJUST SCALES ACCORDINGLY

JOB NO. 10976A.00
DRAWING NO. 00G05
SHEET NO. 7 OF 464

PROJECT NO. 10976A10 FILE NAME: 10976A1000G005.dgn

Plot Date: 10-OCT-2022 7:57:55 AM
User: LDietzel
PlotScale: 1:1
DesignScript: Carollo_Std_Pen_v0905.pen
ColorTable: gshade.ctb
Model: Layout1
LAST SAVED BY: ldietzel

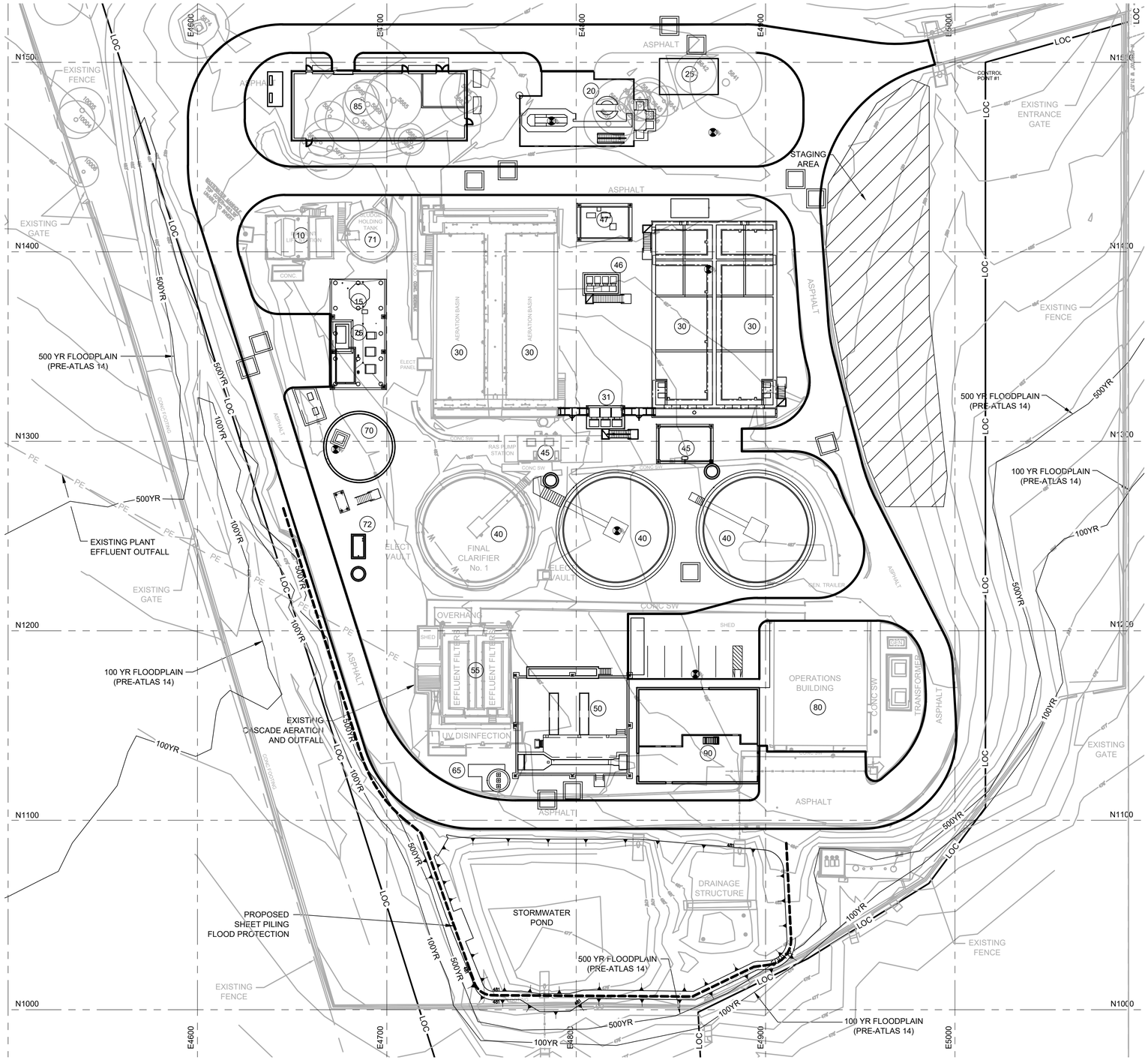

LEGEND

- EXISTING
- PROPOSED
- 100YR — 100 YEAR FLOODPLAIN
- 500YR — 500 YEAR FLOODPLAIN
- LOC — LOC — LIMITS OF CONSTRUCTION
- PROPOSED FLOOD PROTECTION

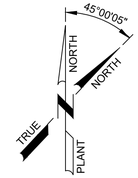

SCALE: 1" = 30'

NOTES:

1. AREA DESIGNATIONS INCLUDE FACILITIES WITHIN A 5 FOOT PERIMETER AROUND DESIGNATED AREA. REFERENCE SITE DRAWINGS FOR FACILITIES OUTSIDE THIS PERIMETER.

AREA NUMBERS:

10	INFLUENT LIFT STATION
15	INFLUENT LIFT STATION ODOR CONTROL
20	HEADWORKS
25	HEADWORKS ODOR CONTROL
30	AERATION BASINS
31	MIXED LIQUOR SPLITTER BOX
40	SECONDARY CLARIFIERS
45	RAS PUMP STATION
46	RAS SPLITTER BOX
47	WAS PUMP STATION
50	FILTERS AND UV FACILITY
55	EXISTING FILTER STRUCTURE
65	PLANT WATER PUMP STATION
70	SLUDGE HOLDING TANK NO. 1
71	SLUDGE HOLDING TANK NO. 2
72	PLANT DRAIN PUMP STATION
75	THICKENING BUILDING
80	OPERATIONS BUILDING
85	SUBSTATION No. 1
90	ADMINISTRATION BUILDING

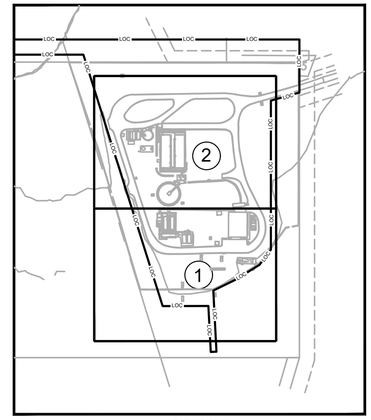

KEYMAP
NTS

Structure	Area Number	Square Footage	Floor Elevation [ft]	Foundation Type
Influent Lift Station	10	831	N/A	Existing Structure
Headworks	20	2,387	485	Ground floor slab on piers
Headworks Odor Control	25	589	486	Ground floor slab on piers
Aeration Basin No. 1 & 2	30	7,003	N/A	Existing Structure
Aeration Basin No. 3 & 4	30	6,532	N/A	Mat foundation atop select fill
ML Splitter Box	31	240	N/A	Mat foundation atop select fill
Clarifier No. 1	40	3,146	N/A	Existing Structure
Clarifier No. 2	40	3,146	N/A	Mat foundation atop select fill
Clarifier No. 3	40	3,146	N/A	Mat foundation atop select fill
RAS Pump Station No. 1	45	621	482.3	Existing Structure
RAS Pump Station No. 2	45	623	486.25	Slab on grade atop select fill
RAS Splitter Box	46	177	486	Slab on grade atop select fill
WAS Pump Station	47	580	485	Slab on grade atop select fill
Filters & UV Facility	50	3,371	N/A	Mat foundation atop select fill
Plant Water Pump Station	65	116	482.75	Mat foundation atop select fill
Sludge Holding Tank No. 1	70	1,114	N/A	Mat foundation atop select fill
Sludge Holding Tank No. 2	71	601	N/A	Existing Structure
Plant Drain Pump Station	72	140	483.33	Mat foundation atop select fill
Lift Station Odor Control/Thickening	75	1,730	484	Ground floor slab on piers
Operations Building	80	3,284	485	Existing Structure
Substation No. 1	85	3,397	485	Ground floor slab on piers
Administration Building	90	3,276	485.5	Ground floor slab on piers

N/A - Floor elevations are not provided for these structures that are below ground tanks with walls above the ground surface.

THIS CONFORMED DOCUMENT IS RELEASED FOR THE CONVENIENCE OF THE CONTRACTOR UNDER THE AUTHORITY OF:

CASEY G. WAUTERS, P.E. — 11-01-22
TX LIC NO. 93889 — DATE

SEE DISCLAIMER FOR LIMITATIONS OF USE.

CONTRACT DOCUMENTS DATED JUNE 10, 2022, AS PART OF THE BIDDING DOCUMENTS (DRAWINGS AND SPECIFICATIONS) AND SUBSEQUENTLY ISSUED ADDENDA HAVE BEEN MERGED INTO ONE CONFORMING SET OF DOCUMENTS FOR THE CONVENIENCE OF THE CONTRACTOR. IF INCONSISTENCIES OR AMBIGUITIES BETWEEN "CONFORMED" DOCUMENTS AND CONTRACT DOCUMENTS ARE FOUND, THE CONTRACT DOCUMENTS SHALL GOVERN.

REV	DATE	BY	DESCRIPTION
			CONFORMED DOCUMENTS

DESIGNED CW
DRAWN AW
CHECKED SGE
DATE FEBRUARY 2022

** ORIGINAL SEALED BY CASEY G. WAUTERS, P.E. 2/28/2022 TX PE 93889 **

AECOM TECHNICAL SERVICES INC.
13640 BRIARWICK DRIVE, SUITE 200
AUSTIN, TEXAS 78729
WWW.AECOM.COM
TBPE REG. NO. F-3580

TBPE No. F-882

CITY OF AUSTIN

CITY OF AUSTIN
WILD HORSE RANCH WWTP EXPANSION
GENERAL
OVERALL WWTP SITE PLAN

VERIFY SCALES
BAR IS ONE INCH ON ORIGINAL DRAWING
0 1"
IF NOT ONE INCH ON THIS SHEET, ADJUST SCALES ACCORDINGLY

JOB NO. 10976A.10
DRAWING NO. 00G06
SHEET NO. 8 OF 464

LAST SAVED BY:

PROJECT NO. 9585A10 FILE NAME: 00G06

Plot Date: 10-OCT-2022 7:59:56 AM
User: LDietzel
PlotScale: 1:1
DesignScript: Carollo_Std_Pen_v0905.pen
ColorTable: gshade.ctb
Model: Layout1
LAST SAVED BY: BSchroeder

DESIGN PARAMETER	CRITERIA	UNIT
DESIGN CRITERIA KEY		
BLACK FONT = PROPOSED		
GRAY FONT = EXISTING		
WASTEWATER CHARACTERISTICS		
INFLUENT FLOW		
AVERAGE ANNUAL	2.25	MGD
MAXIMUM MONTH	2.93	MGD
PEAK 2-HOUR FLOW	9.00	MGD
BIOCHEMICAL OXYGEN DEMAND (BOD)		
AVERAGE ANNUAL		
LOADING	3570	PPD
CONCENTRATION	190	MG/L
MAXIMUM MONTH		
LOADING	5335	PPD
CONCENTRATION	220	MG/L
TOTAL SUSPENDED SOLIDS		
AVERAGE ANNUAL		
LOADING	3570	PPD
CONCENTRATION	190	MG/L
MAXIMUM MONTH		
LOADING	5355	PPD
CONCENTRATION	220	MG/L
TOTAL KJELDAHL NITROGEN (TKN)		
AVERAGE ANNUAL		
LOADING	1030	PPD
CONCENTRATION	55	MG/L
MAXIMUM MONTH		
LOADING	1339	PPD
CONCENTRATION	55.0	MG/L
AMMONIA AS NITROGEN (NH3-N)		
AVERAGE ANNUAL		
LOADING	840	PPD
CONCENTRATION	45	MG/L
MAXIMUM MONTH		
LOADING	1092	PPD
CONCENTRATION	45	MG/L
TOTAL PHOSPHORUS (TP)		
AVERAGE ANNUAL		
LOADING	110	PPD
CONCENTRATION	6	MG/L
MAXIMUM MONTH		
LOADING	143	PPD
CONCENTRATION	6	MG/L
AERATION BASIN INFLUENT TEMPERATURE, 7-DAY AVERAGE		
SUMMER	28	DEG C
WINTER	17	DEG C
INFLUENT LIFT STATION		
PUMPS		
TYPE	SUBMERSIBLE, NON-CLOG	---
DRIVE TYPE	CONSTANT SPEED	---
CAPACITY - PHASE 1 (1.5 MGD ADF)		
NUMBER OF JOCKEY PUMPS	2	---
DESIGN CAPACITY EACH	500	GPM
MOTOR SIZE (EACH)	10	HP
NUMBER OF LARGE PUMPS	3	---
DESIGN CAPACITY EACH	1,800	GPM
MOTOR SIZE (EACH)*	45	HP
CAPACITY - PHASE 2 (2.25 MGD ADF)	CONSTANT SPEED	---
NUMBER OF JOCKEY PUMPS	2	---
DESIGN CAPACITY EACH	1,000	GPM
MOTOR SIZE (EACH)	20	HP
NUMBER OF LARGE PUMPS	3	---
DESIGN CAPACITY EACH	2,400	GPM
MOTOR SIZE (EACH)	45	HP
INFLUENT FLOW METERING		
TYPE	MAGNETIC	
DIAMETER		
CALIBRATED RANGE	0 - 8000	GPM
ODOR CONTROL SYSTEM		
BIOTRICKLING FILTERS		
NUMBER	1	
CONFIGURATION	CYLINDRICAL	
BED HEIGHT	6	FT
AIR EXCHANGE RATIO	6	AC/H
IRRIGATION MODE	ONCE-THROUGH	
FANS		
TYPE	CENTRIFUGAL	
NUMBER	1	
MATERIAL	FRP	
CAPACITY	1,500	CFM
STATIC PRESSURE	8	INCHES OF W.C.
MOTOR SIZE (EACH)	5	HP
HEADWORKS		
INFLUENT SCREENS		
TYPE	MULTI-RAKE	-
NUMBER	2	-
PEAK CAPACITY (EACH)	4.5	MGD
CLEAR SPACING	0.25	INCHES
MOTOR SIZE (EACH)	2	HP
SCREENINGS CONVEYOR		
NUMBER	1	
CAPACITY	155	CF/HR
MOTOR SIZE	5	HP
WASHER/COMPACTOR		
NUMBER	1	-
CAPACITY	100	CF/HR
MOTOR SIZE	5	HP
GRIT REMOVAL UNIT		-
TYPE	MECHANICAL FORCED VORTEX	-
NUMBER	1	
CAPACITY	9.0	MGD
MOTOR SIZE (EACH)	1	HP
GRIT PUMPS		
TYPE	RECESSED IMPELLER	-
NUMBER	1 DUTY, 1 SHELF SPARE	-
CAPACITY (EACH)	250	GPM
MOTOR SIZE (EACH)	5	HP
GRIT WASHER/CLASSIFIER		
TYPE	COANDA-TYPE	-
NUMBER	1	-
LIQUID CAPACITY (EACH)	250	GPM
MOTOR SIZE (EACH)	2.0	HP
ODOR CONTROL SYSTEM		
BIOTRICKLING FILTERS		
NUMBER	1	-
CONFIGURATION	RECTANGULAR	-
BED HEIGHT	7	FT
AIR EXCHANGE RATIO (HW CHANNEL)	6	AC/H
AIR EXCHANGE RATIO (GRIT AREA)	12	AC/H
IRRIGATION MODE	ONCE-THROUGH	-
FANS		
TYPE	CENTRIFUGAL	-
NUMBER	1	-
MATERIAL	FRP	-
CAPACITY	3,000	CFM
STATIC PRESSURE	8	INCHES WC
MOTOR SIZE (EACH)	7.5	HP
AERATION BASINS		
NUMBER	4	-
DIMENSIONS (EACH BASIN)	95 x 30	FT
SIDE WATER DEPTH	16.6	FT
VOLUME (EACH BASIN)	0.338	MG
UNAERATED VOLUME (EACH BASIN)	0.130	MG
AERATED VOLUME (EACH BASIN)	0.209	MG
TOTAL VOLUME	1.364	MG
HYDRAULIC RETENTION TIME (HRT)		
AVERAGE ANNUAL	14.5	HRS
MAXIMUM MONTH	11.1	HRS
MINIMUM AEROBIC SOLIDS RETENTION TIME		
WINTER	5.25	DAYS
MAXIMUM ORGANIC LOADING @ MAXIMUM MONTH	48	LB BOD/ 1000 CF/DAY
DESIGN MLSS	1500 to 3000	MG/L
AERATION BASIN MIXERS		
TYPE	SUBMERSIBLE PROPELLER	-
NUMBER (EACH BASIN)	4	-
MOTOR SIZE (EACH)	5	HP
MIXED LIQUOR RECIRC PUMPS		
TYPE	SUBMERSIBLE, PROPELLER	-
NUMBER (EACH BASIN)	2	-
CAPACITY (EACH)	586	GPM
MOTOR SIZE (EACH)	5	HP
DRIVE	CONSTANT SPEED	-
AERATION BLOWERS		
TYPE	SINGLE-STAGE CENTRIFUGAL	-
NUMBER	3	-
CAPACITY (EACH)	2,050	SCFM
MOTOR SIZE (EACH)	150	HP
FIRM CAPACITY	4,100	SCFM
DIFFUSER TYPE	FINE BUBBLE MEMBRANE DISK	
SECONDARY CLARIFIERS		
CLARIFIER NO. 1		
TYPE	PLOW-TYPE	-
NUMBER	1	-
DIAMETER	60	FT
SURFACE AREA (EACH)	2,827	SF
SIDE WATER DEPTH	15.67	FT
SURFACE OVERFLOW RATE @ PEAK 2-HOUR FLOW	1,114	GPD/SF
MOTOR SIZE	0.75	HP
WEIR LENGTH (EACH)	173	FT
WEIR LOADING @ PEAK 2-HOUR FLOW	18,230	GPD/FT
CLARIFIERS NO. 2 AND 3		
TYPE	SPIRIAL SCRAPER	-
NUMBER	2	-
DIAMETER	60	FT
SURFACE AREA (EACH)	2,827	SF
SIDE WATER DEPTH	15.67	FT
SURFACE OVERFLOW RATE @ PEAK 2-HOUR FLOW	1,114	GPD/SF
MOTOR SIZE	0.75	HP
WEIR LENGTH (EACH)	173	FT
WEIR LOADING @ PEAK 2-HOUR FLOW	18,230	GPD/FT
SECONDARY CLARIFIER SCUM PUMPS		
TYPE	SCREW CENTRIFUGAL	-
NUMBER	4	-
CAPACITY (EACH)	235	GPM
MOTOR SIZE (EACH)	5	HP
DRIVE	CONSTANT SPEED	-
RAS PUMPS		
TYPE	SELF PRIMING CENTRIFUGAL	
NUMBER	5	
CAPACITY	625	GPM
MOTOR SIZE (EACH)	15	HP
DRIVE	MAGNETIC VARIABLE SPEED	
FIRM RAS PUMPING CAPACITY	120% OF ADF	
WAS PUMPS		
TYPE	ROTARY LOBE	
NUMBER	2	
CAPACITY (EACH)	100	GPM
MOTOR SIZE (EACH)	5	HP
DRIVE	CONSTANT SPEED	
FILTERS		
TYPE	CLOTH DISK	-
NUMBER	2 (PHASE 1), 3 (PHASE 2)	-
CAPACITY (EACH)	6	MGD
FIRM CAPACITY	6 (PHASE 1), 12 (PHASE 2)	MGD
MOTOR SIZE (EACH)	2	HP
PORE SIZE	10	MICRON
ULTRAVIOLET DISINFECTION		
CONFIGURATION	INCLINED	-
NUMBER OF CHANNELS	1	-
BANKS (PER CHANNEL)	4 (3 DUTY, 1 STANDBY)	-
NUMBER OF LAMPS (PER BANK)	12	-
DESIGN TRANSMITTANCE	65	%
DESIGN UV DOSE (T1)	17	MJ/CM^2
FIRM CAPACITY	9.0	MGD
DEPTH CONTROL	FIXED WEIRS	-
EFFLUENT FLOW METER		
ELEMENT TYPE	PARSHALL FLUME	-
THROAT WIDTH	12	INCHES
CAPACITY RANGE	0.08 - 10.4	MGD
POST-AERATON		
TYPE	CASCADE	
NUMBER OF STEPS	6	
PLANT WATER SYSTEM		
PLANT WATER PUMPS		
TYPE	VERTICAL TURBINE	-
NUMBER	2 DUTY, 1 STANDBY	-
DRIVE	CONSTANT SPEED	-
CAPACITY (EACH)	150	GPM
MOTOR SIZE (EACH)	15	HP
DISCHARGE PRESSURE	85	PSI
OPERATIONAL STRATEGY	RECIRCULATION SYSTEM	-
WET WELL		
VOLUME	3000	GAL
OPERATING DEPTH	5	FT
OVERALL DEPTH	10	FT
PLANT DRAIN PUMP SYSTEM		
PLANT DRAIN PUMPS		
TYPE	SUBMERSIBLE, NON-CLOG	-
NUMBER	2	-
DRIVE	CONSTANT SPEED	-
CAPACITY (EACH)	500	GPM
MOTOR SIZE (EACH)	15	HP
DISCHARGE PRESSURE	21	PSI
WET WELL		
DIAMETER	6	FT
VOLUME	2100	GAL
OPERATING DEPTH	10	FT
OVERALL DEPTH	20	FT
SLUDGE THICKENING		
THICKENER		
TYPE	VOLUTE PRESS	-
NUMBER	1	-
NUMBER OF DRUMS	3	-
HYDRAULIC CAPACITY (EACH DRUM)	133	GPM
SOLIDS FEED RATE @ MAX. HYDRAULIC FEED RATE @ 1.5% TSS	3,000	LB/HR
SOLIDS FEED RATE @ MAX. HYDRAULIC FEED RATE @ 0.5% TSS	1,000	LB/HR
TARGET THICKENED SOLIDS	3.0 - 6.0	%
MOTOR SIZE (EACH)	7.5	HP
POLYMER BLENDING & FEED EQUIPMENT		
TYPE	PROGRESSING CAVITY	-
NUMBER	1	-
CAPACITY	5	GAL/HR
MOTOR SIZE	0.5	HP
POLYMER		
POLYMER STORAGE	TOTES	
POLYMER TYPE	EMULSION	
ACTIVE POLYMER CONCENTRATION	42	%
DILUTE POLYMER SOLUTION CONCENTRATION	0.25	%
THICKENED SLUDGE PUMPS		
TYPE	PROGRESSING CAVITY	
NUMBER	1	
CAPACITY (EACH)	60	GPM
HOSREPOWER (EACH)	5	HP
DRIVE	VARIABLE	-
SLUDGE HOLDING		
TANK NO. 1 (WAS)		
NUMBER	1	-
DIAMETER	35	FT
SIDE WATER DEPTH (MAXIMUM)	15.35	FT
VOLUME	110,400	GAL
TOTAL SOLDIS CONCENTRATION	0.5 TO 1.0	%
DIFFUSER TYPE	FINE BUBBLE MEMBRANE DISK	-
TANK NO. 2 (THICKENED WAS)		
NUMBER	1	-
DIAMETER	25	FT
SIDE WATER DEPTH (MAXIMUM)	14	FT
VOLUME	55,200	GAL
TARGET SOLIDS CONCENTRATION	3.0	%
DIFFUSER TYPE	FINE BUBBLE MEMBRANE DISK	-
THICKENING SLUDGE FEED PUMPS		
TYPE	ROTARY LOBE	-
NUMBER	2	-
CAPACITY (EACH)	400	GPM
MOTOR SIZE (EACH)	7.5	HP
DRIVE	VARIABLE	-
BLOWERS		
TYPE	POSITIVE DISPLACEMENT	
NUMBER	3 (2 DUTY, 1 STANDBY)	
CAPACITY (EACH)		
LARGE BLOWER	443	SCFM
SMALL BLOWER	206	SCFM
MOTOR SIZE (EACH)		
LARGE BLOWER	30	HP
SMALL BLOWER	15	HP
DRIVE TYPE (ALL BLOWERS)	VARIABLE	-
ALUM FEED SYSTEM		
ALUM STORAGE TANK		
NUMBER	1	-
DIAMETER	10	FT
CAPACITY	6,600	GAL
TYPE	FIBERGLASS	-
ALUM FEED PUMPS		
NUMBER	3	-
TYPE	DIAPHRAGM	-
CAPACITY	25	GPH
TPDES EFFLUENT PERMIT LIMITS		
MONTHLY AVERAGE		
MAX. $CBOD_5$	5.0	MG/L
MAX. TSS	5.0	MG/L
MAX. NH3-N	2.0	MG/L
MAX. TP	0.5	MG/L
GRAB SAMPLE		
MIN. DO	5.0	MG/L

THIS CONFORMED DOCUMENT IS RELEASED FOR THE CONVENIENCE OF THE CONTRACTOR UNDER THE AUTHORITY OF:

DANNY M HURTADO, P.E. 11-01-22
TX LIC NO. 104266 DATE

SEE DISCLAIMER FOR LIMITATIONS OF USE.

CONTRACT DOCUMENTS DATED JUNE 10, 2022, AS PART OF THE BIDDING DOCUMENTS (DRAWINGS AND SPECIFICATIONS) AND SUBSEQUENTLY ISSUED ADDENDA HAVE BEEN MERGED INTO ONE CONFORMING SET OF DOCUMENTS FOR THE CONVENIENCE OF THE CONTRACTOR. IF INCONSISTENCIES OR AMBIGUITIES BETWEEN "CONFORMED" DOCUMENTS AND CONTRACT DOCUMENTS ARE FOUND, THE CONTRACT DOCUMENTS SHALL GOVERN.

REV	DATE	BY	DESCRIPTION
			CONFORMED DOCUMENTS

DESIGNED DMH
DRAWN LGD
CHECKED JEA
DATE NOVEMBER 2022

** ORIGINAL SEALED BY DANNY M. HURTADO 06-10-22 TX PE 104266 **

carollo®
TBPELS No. F-882

CITY OF AUSTIN
FOUNDED 1839
CITY OF AUSTIN

CITY OF AUSTIN
WILD HORSE RANCH WWTP EXPANSION
GENERAL
DESIGN CRITERIA

VERIFY SCALES
BAR IS ONE INCH ON ORIGINAL DRAWING
0 1"
IF NOT ONE INCH ON THIS SHEET, ADJUST SCALES ACCORDINGLY

JOB NO. 10976A.00
DRAWING NO. 00G07
SHEET NO. 9 OF 464

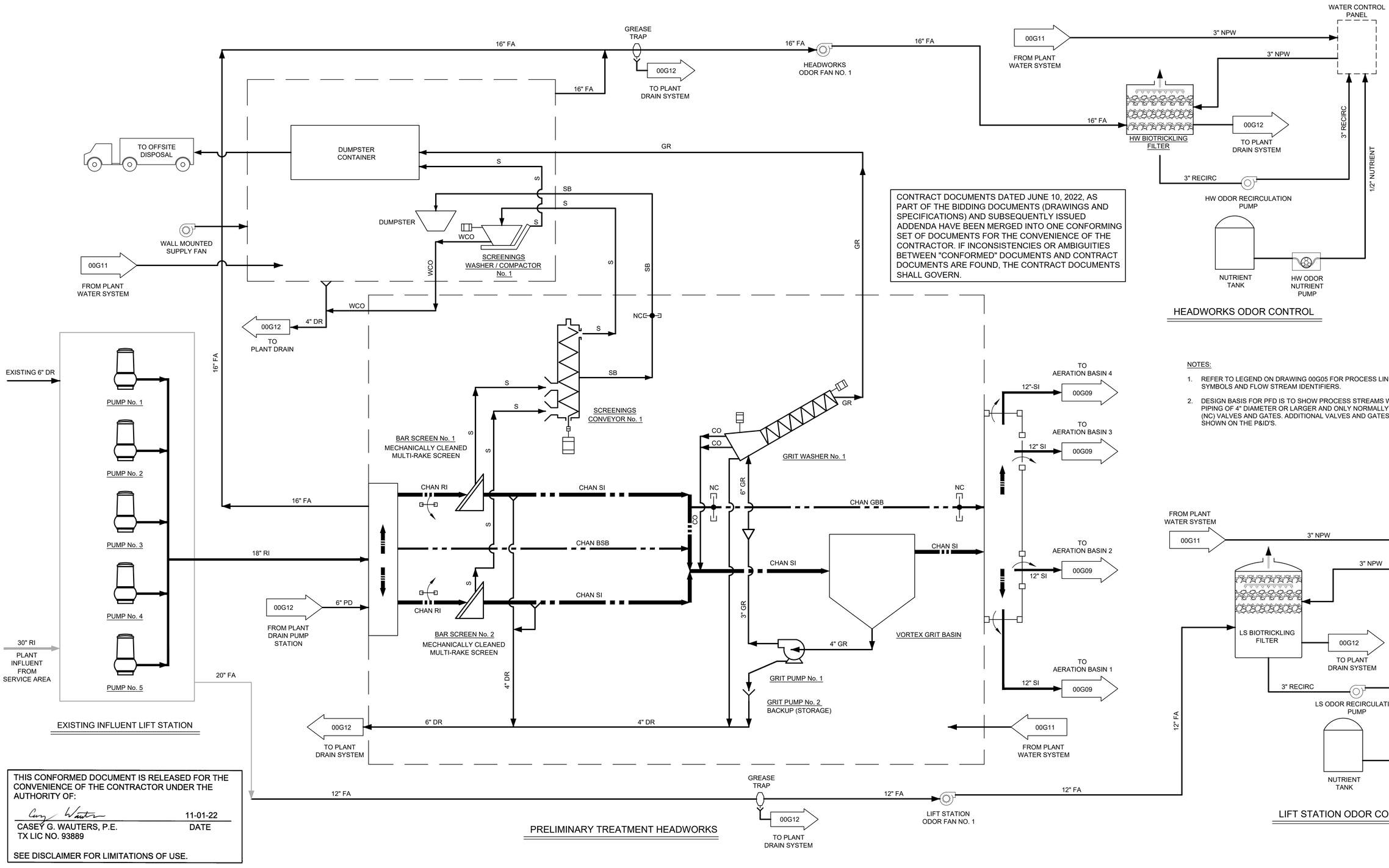

THIS CONFORMED DOCUMENT IS RELEASED FOR THE CONVENIENCE OF THE CONTRACTOR UNDER THE AUTHORITY OF:

CASEY G. WAUTERS, P.E.
TX LIC NO. 93889

11-01-22
DATE

SEE DISCLAIMER FOR LIMITATIONS OF USE.

REV	DATE	BY	DESCRIPTION
			CONFORMED DOCUMENTS

DESIGNED CW
DRAWN AW
CHECKED SGE
DATE FEBRUARY 2022

** ORIGINAL SEALED BY CASEY G. WAUTERS, P.E. 2/28/2022 TX PE 93889 **

AECOM TECHNICAL SERVICES INC.
13640 BRIARWICK DRIVE, SUITE 200
AUSTIN, TEXAS 78729
WWW.AECOM.COM
TBPE REG. NO. F-3580

TBPE No. F-882

CITY OF AUSTIN

CITY OF AUSTIN
WILD HORSE RANCH WWTP EXPANSION
GENERAL
INFLUENT LS AND HEADWORKS PFD

VERIFY SCALES
BAR IS ONE INCH ON ORIGINAL DRAWING
0 1"
IF NOT ONE INCH ON THIS SHEET, ADJUST SCALES ACCORDINGLY

JOB NO. 10976A.10
DRAWING NO. 00G08
SHEET NO. 10 OF 464

LAST SAVED BY: dseivert

THIS CONFORMED DOCUMENT IS RELEASED FOR THE CONVENIENCE OF THE CONTRACTOR UNDER THE AUTHORITY OF:

11-01-22
DANNY M HURTADO, P.E. DATE
TX LIC NO. 104266

SEE DISCLAIMER FOR LIMITATIONS OF USE.

CONTRACT DOCUMENTS DATED JUNE 10, 2022, AS PART OF THE BIDDING DOCUMENTS (DRAWINGS AND SPECIFICATIONS) AND SUBSEQUENTLY ISSUED ADDENDA HAVE BEEN MERGED INTO ONE CONFORMING SET OF DOCUMENTS FOR THE CONVENIENCE OF THE CONTRACTOR. IF INCONSISTENCIES OR AMBIGUITIES BETWEEN "CONFORMED" DOCUMENTS AND CONTRACT DOCUMENTS ARE FOUND, THE CONTRACT DOCUMENTS SHALL GOVERN.

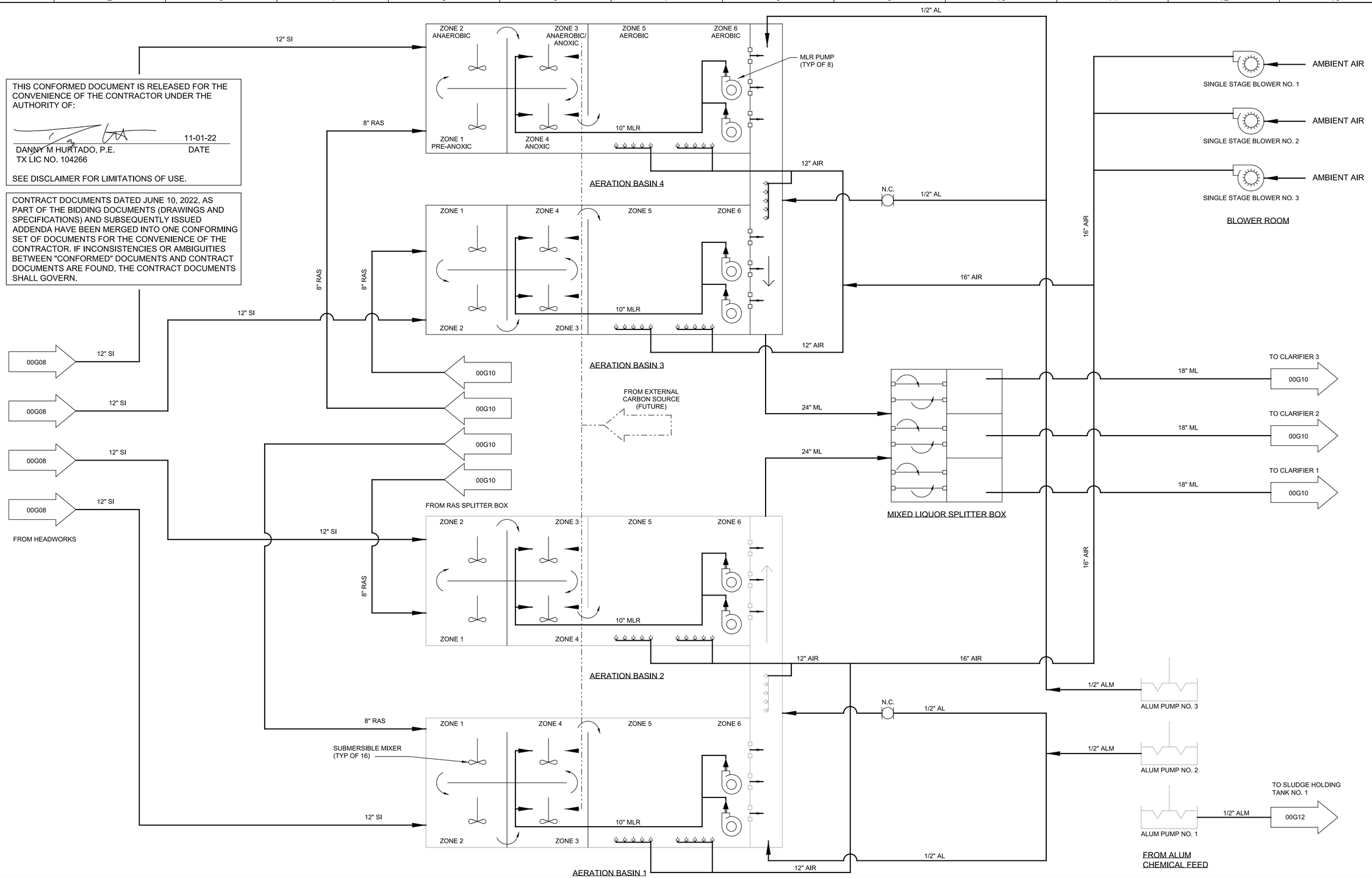

REV	DATE	BY	DESCRIPTION
			CONFORMED DOCUMENTS

DESIGNED DMH
DRAWN LGD
CHECKED JEA
DATE NOVEMBER 2022

** ORIGINAL SEALED BY DANNY M. HURTADO 06-10-22 TX PE 104266 **

carollo® TBPELS No. F-882

CITY OF AUSTIN FOUNDED 1839 **CITY OF AUSTIN**

CITY OF AUSTIN
WILD HORSE RANCH WWTP EXPANSION
GENERAL
AERATION BASIN PROCESS FLOW DIAGRAM

VERIFY SCALES
BAR IS ONE INCH ON ORIGINAL DRAWING
0 1"
IF NOT ONE INCH ON THIS SHEET, ADJUST SCALES ACCORDINGLY

JOB NO. 10976A.00
DRAWING NO. 00G09
SHEET NO. 11 OF 464

PROJECT NO. 10976A10 FILE NAME: 10976A1000G009.dgn

Plot Date: 10-OCT-2022 8:02:18 AM
User: LDietzel
PlotScale: 1:1
DesignScript: Carollo_Std_Pen_v0905.pen
ColorTable: gshade.ctb
Model: Layout1
LAST SAVED BY: BSchroeder

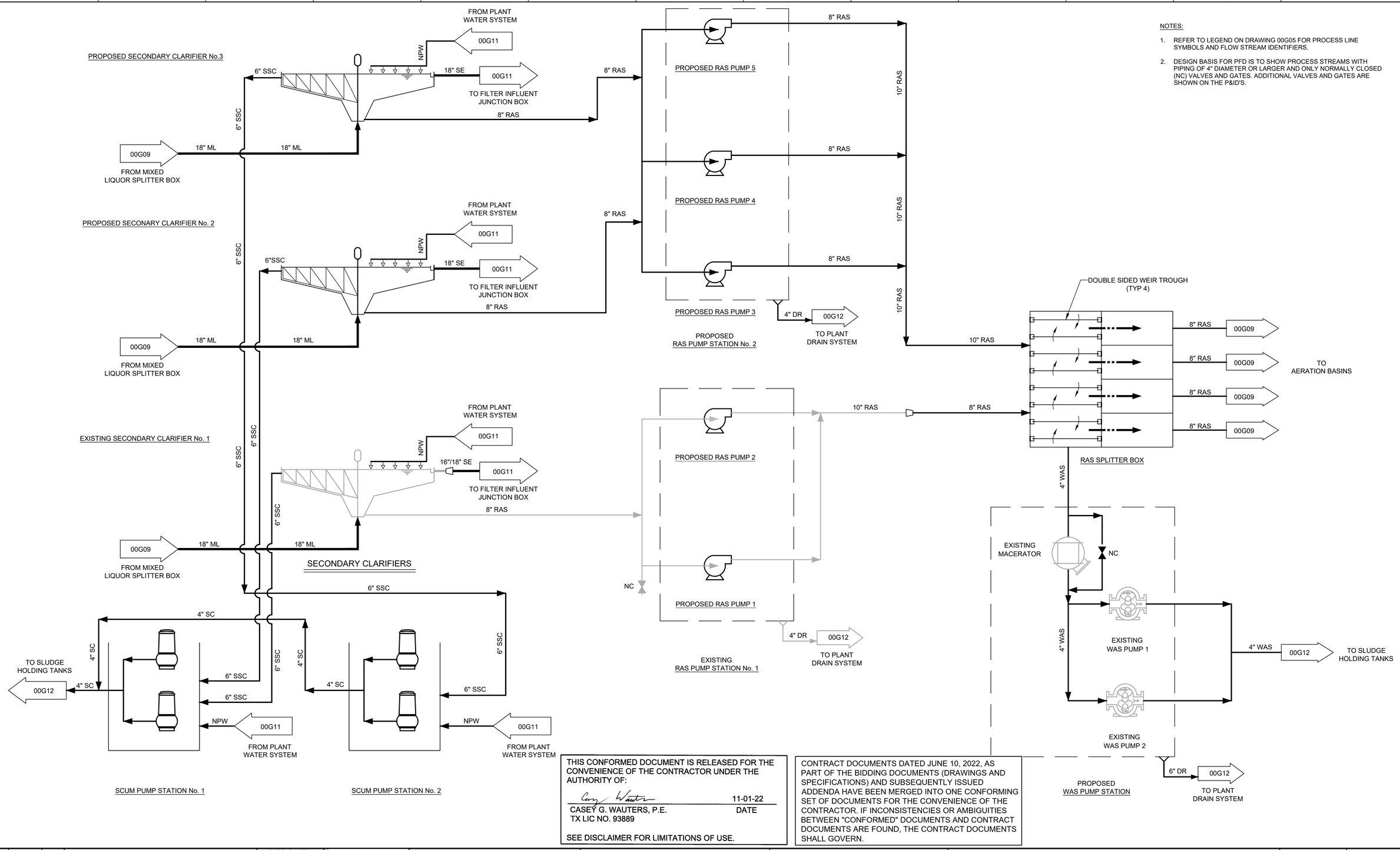

NOTES:

1. REFER TO LEGEND ON DRAWING 00G05 FOR PROCESS LINE SYMBOLS AND FLOW STREAM IDENTIFIERS.
2. DESIGN BASIS FOR PFD IS TO SHOW PROCESS STREAMS WITH PIPING OF 4" DIAMETER OR LARGER AND ONLY NORMALLY CLOSED (NC) VALVES AND GATES. ADDITIONAL VALVES AND GATES ARE SHOWN ON THE P&ID'S.

THIS CONFORMED DOCUMENT IS RELEASED FOR THE CONVENIENCE OF THE CONTRACTOR UNDER THE AUTHORITY OF:

CASEY G. WAUTERS, P.E. 11-01-22
TX LIC NO. 93889 DATE

SEE DISCLAIMER FOR LIMITATIONS OF USE.

CONTRACT DOCUMENTS DATED JUNE 10, 2022, AS PART OF THE BIDDING DOCUMENTS (DRAWINGS AND SPECIFICATIONS) AND SUBSEQUENTLY ISSUED ADDENDA HAVE BEEN MERGED INTO ONE CONFORMING SET OF DOCUMENTS FOR THE CONVENIENCE OF THE CONTRACTOR. IF INCONSISTENCIES OR AMBIGUITIES BETWEEN "CONFORMED" DOCUMENTS AND CONTRACT DOCUMENTS ARE FOUND, THE CONTRACT DOCUMENTS SHALL GOVERN.

REV	DATE	BY	DESCRIPTION
			CONFORMED DOCUMENTS

DESIGNED CW
DRAWN AW
CHECKED SGE
DATE FEBRUARY 2022

**
ORIGINAL
SEALED BY
CASEY G. WAUTERS, P.E.
2/28/2022
TX PE 93889
**

AECOM TECHNICAL SERVICES INC.
13640 BRIARWICK DRIVE, SUITE 200
AUSTIN, TEXAS 78729
WWW.AECOM.COM
TBPE REG. NO. F-3580

TBPE No. F-882

CITY OF AUSTIN

CITY OF AUSTIN
WILD HORSE RANCH WWTP EXPANSION
GENERAL
SECONDARY CLARIFIERS AND RAS PS PFD

VERIFY SCALES
BAR IS ONE INCH ON ORIGINAL DRAWING
0 1"
IF NOT ONE INCH ON THIS SHEET, ADJUST SCALES ACCORDINGLY

JOB NO. 10976A.10
DRAWING NO. 00G10
SHEET NO. 12 OF 464

LAST SAVED BY:

THIS CONFORMED DOCUMENT IS RELEASED FOR THE CONVENIENCE OF THE CONTRACTOR UNDER THE AUTHORITY OF:

DANNY M HURTADO, P.E.
TX LIC NO. 104266

11-01-22
DATE

SEE DISCLAIMER FOR LIMITATIONS OF USE.

CONTRACT DOCUMENTS DATED JUNE 10, 2022, AS PART OF THE BIDDING DOCUMENTS (DRAWINGS AND SPECIFICATIONS) AND SUBSEQUENTLY ISSUED ADDENDA HAVE BEEN MERGED INTO ONE CONFORMING SET OF DOCUMENTS FOR THE CONVENIENCE OF THE CONTRACTOR. IF INCONSISTENCIES OR AMBIGUITIES BETWEEN "CONFORMED" DOCUMENTS AND CONTRACT DOCUMENTS ARE FOUND, THE CONTRACT DOCUMENTS SHALL GOVERN.

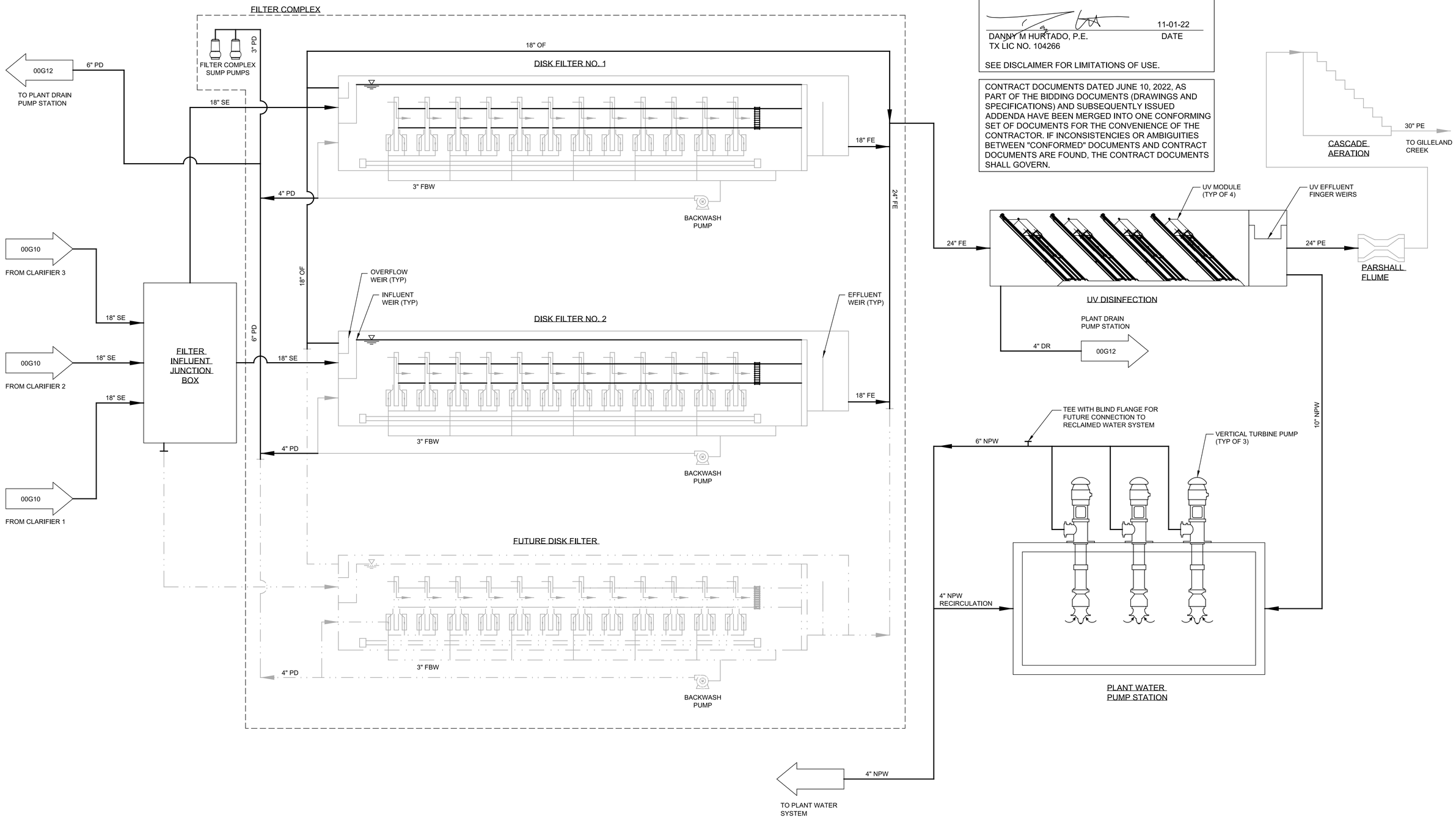

REV	DATE	BY	DESCRIPTION
			CONFORMED DOCUMENTS

DESIGNED DMH
DRAWN LGD
CHECKED JEA
DATE NOVEMBER 2022

** ORIGINAL SEALED BY DANNY M. HURTADO 06-10-22 TX PE 104266 **

carollo
TBPELS No. F-882

CITY OF AUSTIN

CITY OF AUSTIN
WILD HORSE RANCH WWTP EXPANSION
GENERAL
FILTER-UV-EFFLUENT PROCESS FLOW DIAGRAM

VERIFY SCALES
BAR IS ONE INCH ON ORIGINAL DRAWING
0 1"
IF NOT ONE INCH ON THIS SHEET, ADJUST SCALES ACCORDINGLY

JOB NO. 10976A.00
DRAWING NO. 00G11
SHEET NO. 13 OF 464

PROJECT NO. 10976A10 FILE NAME: 10976A1000G011.dgn

Plot Date: 10-OCT-2022 8:03:40 AM
User: LDietzel
PlotScale: 1:1
DesignScript: Carollo_Std_Pen_v0905.pen
ColorTable: gshade.ctb
Model: Layout1
LAST SAVED BY: BSchroeder

Plot Date: 10-OCT-2022 8:06:14 AM
User: LDietzel
PlotScale: 1:1
DesignScript: Carollo_Std_Pen_v0905.pen
ColorTable: gshade.ctb
Model: Layout1
LAST SAVED BY: ldietzel

THICKENING BUILDING

FROM ATMOSPHERE

ROTARY LOBE BLOWERS

3" AIR

4" AIR

4" AIR

4" AIR

4" AIR

6" AIR

4" AIR

6" AIR

THIS CONFORMED DOCUMENT IS RELEASED FOR THE CONVENIENCE OF THE CONTRACTOR UNDER THE AUTHORITY OF:

11-01-22

DANNY M HURTADO, P.E. DATE
TX LIC NO. 104266

SEE DISCLAIMER FOR LIMITATIONS OF USE.

CONTRACT DOCUMENTS DATED JUNE 10, 2022, AS PART OF THE BIDDING DOCUMENTS (DRAWINGS AND SPECIFICATIONS) AND SUBSEQUENTLY ISSUED ADDENDA HAVE BEEN MERGED INTO ONE CONFORMING SET OF DOCUMENTS FOR THE CONVENIENCE OF THE CONTRACTOR. IF INCONSISTENCIES OR AMBIGUITIES BETWEEN "CONFORMED" DOCUMENTS AND CONTRACT DOCUMENTS ARE FOUND, THE CONTRACT DOCUMENTS SHALL GOVERN.

FROM SCUM PUMP STATIONS 00G10 6" SC

N.C.

FROM WAS PUMP STATION 00G10 4" WAS

4" WAS (BYPASS)

N.C.

FROM PLANT WATER SYSTEM 00G11 2" NPW

1" NPW

ALUM 00G09 1" ALM

4" WAS

6" SC (BYPASS)

POLYMER TOTE

1/2" PLY

POLYMER BLENDING UNIT

1" PLY

FLASH MIXING TANK

FLOC TANK

SLUDGE THICKENER

TWAS PUMP

4" TWAS

SAMPLE POINT

6" WAS

8" OF

3" DR

12" FIL

12" DR

SLUDGE HOLDING TANK NO. 1 (WAS)

8" OF

8" DR

8" DR

8" WAS

N.C.

EXISTING DECANT LINE CONVERTED TO OVERFLOW TO INFLUENT LS

6" OF

00G08

THICKENING FEED PUMP NO. 1

THICKENING FEED PUMP NO. 2

6" WAS

N.C.

6" WAS

N.C.

6" WAS

6" WAS

6" WAS

6" WAS

4" WAS

TRUCK LOADING

SAMPLE POINT

THICKENER FEED PUMP AREA

6" DR

6" DR

6" DR

6" DR

12" DR

12" DR

12" DR

FROM LS ODOR CONTROL DRAIN 00G09

12" DR

EX 8" TWAS

4" TWAS

TRUCK LOADING

SLUDGE HOLDING TANK NO. 2 (TWAS)

SAMPLE POINT

6" PD

6" PD

6" PD

00G08

TO HEADWORKS

6" OF

00G08

FROM FILTER BACKWASH SYSTEM AND SUMP PUMPS 00G11

12" DR

8" DR

6" PD

UV CHANNEL DRAIN 00G11

4" DR

6" DR

00G08 00G09

FROM PLANT DRAIN

PLANT DRAIN PUMP STATION

THIS CONFORMED DOCUMENT IS RELEASED FOR THE CONVENIENCE OF THE CONTRACTOR UNDER THE AUTHORITY OF:

11-01-22

DANNY M HURTADO, P.E. DATE
TX LIC NO. 104266

SEE DISCLAIMER FOR LIMITATIONS OF USE.

CONTRACT DOCUMENTS DATED JUNE 10, 2022, AS PART OF THE BIDDING DOCUMENTS (DRAWINGS AND SPECIFICATIONS) AND SUBSEQUENTLY ISSUED ADDENDA HAVE BEEN MERGED INTO ONE CONFORMING SET OF DOCUMENTS FOR THE CONVENIENCE OF THE CONTRACTOR. IF INCONSISTENCIES OR AMBIGUITIES BETWEEN "CONFORMED" DOCUMENTS AND CONTRACT DOCUMENTS ARE FOUND, THE CONTRACT DOCUMENTS SHALL GOVERN.

REV	DATE	BY	DESCRIPTION
			CONFORMED DOCUMENTS

DESIGNED DMH
DRAWN LGD
CHECKED JEA
DATE NOVEMBER 2022

** ORIGINAL SEALED BY DANNY M. HURTADO 06-10-22 TX PE 104266 **

carollo®
TBPELS No. F-882

CITY OF AUSTIN FOUNDED 1839

CITY OF AUSTIN

CITY OF AUSTIN

WILD HORSE RANCH WWTP EXPANSION

GENERAL

SLUDGE THICKENING AND STORAGE PROCESS FLOW DIAGRAM

VERIFY SCALES
BAR IS ONE INCH ON ORIGINAL DRAWING
0 1"
IF NOT ONE INCH ON THIS SHEET, ADJUST SCALES ACCORDINGLY

JOB NO. 10976A.00
DRAWING NO. 00G12
SHEET NO. 14 OF 464

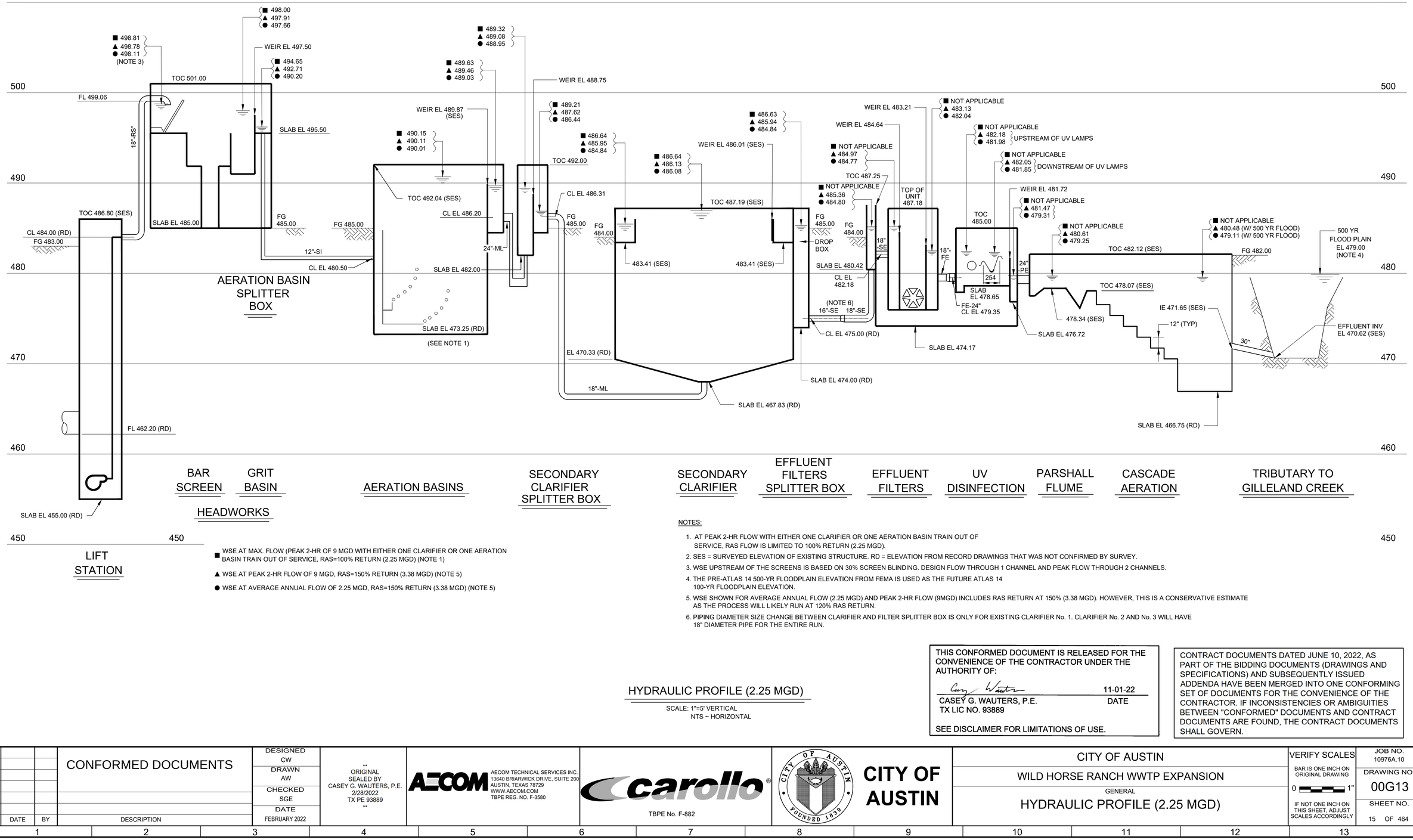

■ WSE AT MAX. FLOW (PEAK 2-HR OF 9 MGD WITH EITHER ONE CLARIFIER OR ONE AERATION BASIN TRAIN OUT OF SERVICE, RAS=100% RETURN (2.25 MGD) (NOTE 1)

▲ WSE AT PEAK 2-HR FLOW OF 9 MGD, RAS=150% RETURN (3.38 MGD) (NOTE 5)

● WSE AT AVERAGE ANNUAL FLOW OF 2.25 MGD, RAS=150% RETURN (3.38 MGD) (NOTE 5)

NOTES:

1. AT PEAK 2-HR FLOW WITH EITHER ONE CLARIFIER OR ONE AERATION BASIN TRAIN OUT OF SERVICE, RAS FLOW IS LIMITED TO 100% RETURN (2.25 MGD).
2. SES = SURVEYED ELEVATION OF EXISTING STRUCTURE. RD = ELEVATION FROM RECORD DRAWINGS THAT WAS NOT CONFIRMED BY SURVEY.
3. WSE UPSTREAM OF THE SCREENS IS BASED ON 30% SCREEN BLINDING. DESIGN FLOW THROUGH 1 CHANNEL AND PEAK FLOW THROUGH 2 CHANNELS.
4. THE PRE-ATLAS 14 500-YR FLOODPLAIN ELEVATION FROM FEMA IS USED AS THE FUTURE ATLAS 14 100-YR FLOODPLAIN ELEVATION.
5. WSE SHOWN FOR AVERAGE ANNUAL FLOW (2.25 MGD) AND PEAK 2-HR FLOW (9MGD) INCLUDES RAS RETURN AT 150% (3.38 MGD). HOWEVER, THIS IS A CONSERVATIVE ESTIMATE AS THE PROCESS WILL LIKELY RUN AT 120% RAS RETURN.
6. PIPING DIAMETER SIZE CHANGE BETWEEN CLARIFIER AND FILTER SPLITTER BOX IS ONLY FOR EXISTING CLARIFIER No. 1. CLARIFIER No. 2 AND No. 3 WILL HAVE 18" DIAMETER PIPE FOR THE ENTIRE RUN.

HYDRAULIC PROFILE (2.25 MGD)

SCALE: 1"=5' VERTICAL
NTS ~ HORIZONTAL

THIS CONFORMED DOCUMENT IS RELEASED FOR THE CONVENIENCE OF THE CONTRACTOR UNDER THE AUTHORITY OF:

CASEY G. WAUTERS, P.E. — 11-01-22
TX LIC NO. 93889 — DATE

SEE DISCLAIMER FOR LIMITATIONS OF USE.

CONTRACT DOCUMENTS DATED JUNE 10, 2022, AS PART OF THE BIDDING DOCUMENTS (DRAWINGS AND SPECIFICATIONS) AND SUBSEQUENTLY ISSUED ADDENDA HAVE BEEN MERGED INTO ONE CONFORMING SET OF DOCUMENTS FOR THE CONVENIENCE OF THE CONTRACTOR. IF INCONSISTENCIES OR AMBIGUITIES BETWEEN "CONFORMED" DOCUMENTS AND CONTRACT DOCUMENTS ARE FOUND, THE CONTRACT DOCUMENTS SHALL GOVERN.

REV	DATE	BY	DESCRIPTION
			CONFORMED DOCUMENTS

DESIGNED CW
DRAWN AW
CHECKED SGE
DATE FEBRUARY 2022

**
ORIGINAL SEALED BY CASEY G. WAUTERS, P.E.
2/28/2022
TX PE 93889
**

AECOM TECHNICAL SERVICES INC.
13640 BRIARWICK DRIVE, SUITE 200
AUSTIN, TEXAS 78729
WWW.AECOM.COM
TBPE REG. NO. F-3580

TBPE No. F-882

CITY OF AUSTIN

CITY OF AUSTIN
WILD HORSE RANCH WWTP EXPANSION
GENERAL
HYDRAULIC PROFILE (2.25 MGD)

VERIFY SCALES
BAR IS ONE INCH ON ORIGINAL DRAWING
0 — 1"
IF NOT ONE INCH ON THIS SHEET, ADJUST SCALES ACCORDINGLY

JOB NO. 10976A.10
DRAWING NO. 00G13
SHEET NO. 15 OF 464

LAST SAVED BY:

PROJECT NO. 9585A10 FILE NAME:

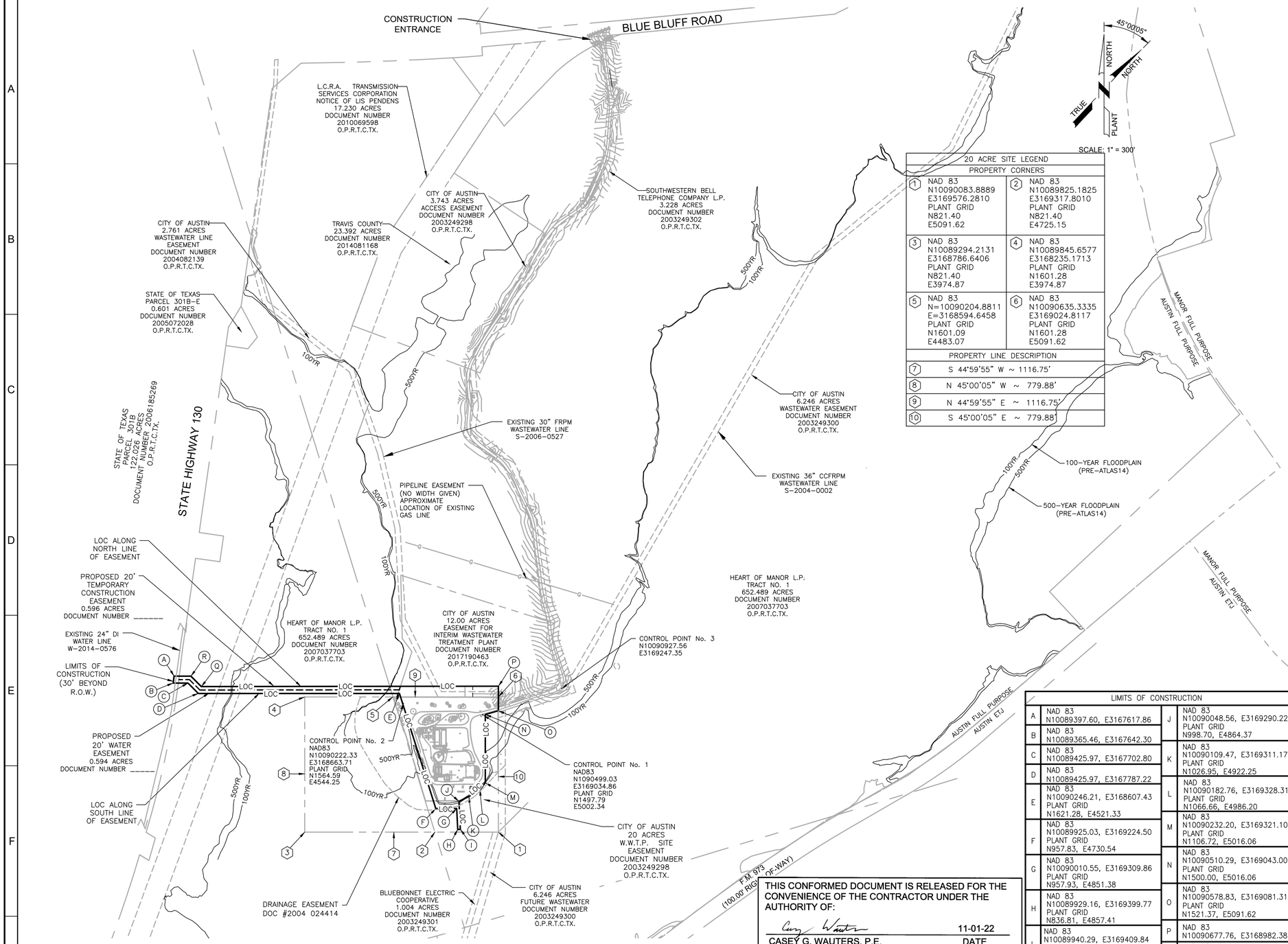

20 ACRE SITE LEGEND	
PROPERTY CORNERS	
1 NAD 83 N10090083.8889 E3169576.2810 PLANT GRID N821.40 E5091.62	2 NAD 83 N10089825.1825 E3169317.8010 PLANT GRID N821.40 E4725.15
3 NAD 83 N10089294.2131 E3168786.6406 PLANT GRID N821.40 E3974.87	4 NAD 83 N10089845.6577 E3168235.1713 PLANT GRID N1601.28 E3974.87
5 NAD 83 N=10090204.8811 E=3168594.6458 PLANT GRID N1601.09 E4483.07	6 NAD 83 N10090635.3335 E3169024.8117 PLANT GRID N1601.28 E5091.62
PROPERTY LINE DESCRIPTION	
7	S 44°59'55" W ~ 1116.75'
8	N 45°00'05" W ~ 779.88'
9	N 44°59'55" E ~ 1116.75'
10	S 45°00'05" E ~ 779.88

LIMITS OF CONSTRUCTION			
A	NAD 83 N10089397.60, E3167617.86	J	NAD 83 N10090048.56, E3169290.22 PLANT GRID N998.70, E4864.37
B	NAD 83 N10089365.46, E3167642.30	K	NAD 83 N10090109.47, E3169311.17 PLANT GRID N1026.95, E4922.25
C	NAD 83 N10089425.97, E3167702.80	L	NAD 83 N10090182.76, E3169328.31 PLANT GRID N1066.66, E4986.20
D	NAD 83 N10089425.97, E3167787.22	M	NAD 83 N10090232.20, E3169321.10 PLANT GRID N1106.72, E5016.06
E	NAD 83 N10090246.21, E3168607.43 PLANT GRID N1621.28, E4521.33	N	NAD 83 N10090510.29, E3169043.00 PLANT GRID N1500.00, E5016.06
F	NAD 83 N10089925.03, E3169224.50 PLANT GRID N957.83, E4730.54	O	NAD 83 N10090578.83, E3169081.31 PLANT GRID N1521.37, E5091.62
G	NAD 83 N10090010.55, E3169309.86 PLANT GRID N957.93, E4851.38	P	NAD 83 N10090677.76, E3168982.38
H	NAD 83 N10089929.16, E3169399.77 PLANT GRID N836.81, E4857.41	Q	NAD 83 N10089465.97, E3167771.13
I	NAD 83 N10089940.29, E3169409.84 PLANT GRID N837.55, E4872.39	R	NAD 83 N10089465.97, E3167686.23

LEGEND

- PROPERTY BOUNDARY
- EASEMENTS
- 100YR — 100YR — 100 YEAR FLOODPLAIN
- 500YR — 500YR — 500 YEAR FLOODPLAIN
- LOC — LOC — LIMITS OF CONSTRUCTION

SURVEY CONTROL POINTS (GRID-FEET) (TEXAS CENTRAL ZONE – NAD83)

PNT NO.	NORTHING	EASTING	ELEV.	DESCRIPTION
1	10090499.0300'	3169034.8600'	488.06'	⅝" IRON ROD SET WITH CAP
2	10090222.3330'	3168663.7140'	486.26'	⅝" IRON ROD SET WITH CAP
3	10090927.5590'	3169247.3500'	490.64'	⅝" IRON ROD SET WITH CAP
25	10089379.1732'	3167643.4383'	524.08'	1/2" IRON ROD SET WITH CAP
50	10098045.7249'	3181993.8323'	509.95'	NGS Q240

NOTES:

1. A PORTION OF THIS PROJECT IS LOCATED WITHIN THE 100-YEAR FLOODPLAIN AS SHOWN ON THE FEDERAL EMERGENCY MANAGEMENT AGENCY FIRM PANEL 48453C0480J DATED AUGUST 18, 2014 FOR TRAVIS COUNTY, TEXAS.
2. THIS SITE IS LOCATED IN THE GILLELAND WATERSHED, CLASSIFIED AS A SUBURBAN WATERSHED.
3. THIS SITE IS NOT LOCATED IN THE EDWARDS AQUIFER ZONE, AS DEFINED BY THE CITY OF AUSTIN AND THE TEXAS COMMISSION ON ENVIRONMENTAL QUALITY.
4. THIS PROJECT IS IN GENERAL COMPLIANCE WITH THE WATERSHED PROTECTION REGULATIONS (CHAPTER 25-2 AND 25-8 OF LDC).
5. THIS PROJECT IS IN THE LIMITED PURPOSE JURISDICTION OF THE CITY OF AUSTIN AND ZONED P.U.D.
6. ALL COORDINATES, BEARINGS AND DISTANCES REFER TO THE TEXAS STATE PLANE COORDINATE SYSTEM (GRID), CENTRAL ZONE, NORTH AMERICAN DATUM OF 1983 (NAD 83, US SURVEY FEET).
7. ELEVATIONS AND CONTOURS ARE BASED ON U.S.G.S. BENCHMARK STAMPED (Q 240), NAVD 1988 ELEVATION=509.84.

   STATION LOCATION:
   10.3 MI W FROM ELGIN, 10.3 MILES WEST ALONG THE TEXAS AND NEW ORLEANS RAILROAD FROM THE STATION AT ELGIN, 9.5 FEET WEST OF THE 2ND POLE EAST OF MILEPOST 98, 73 FEET SOUTHWEST OF THE CENTER OF A PRIVATE ROAD CROSSING, 41.7 FEET SOUTH OF THE SOUTH RAIL, 56 FEET NORTH OF A FENCE, 3 FEET EAST OF A WITNESS POST, SET IN THE TOP OF A CONCRETE POST WHICH PROJECTS 0.7 FOOT ABOVE THE GROUND.
8. BOUNDARY AND RIGHT-OF-WAY LINES ARE FOR REPRESENTATIONAL PURPOSES ONLY. ZAMORA LLC DID NOT PERFORM A BOUNDARY SURVEY.
9. THIS SURVEY WAS PERFORMED WITHOUT THE BENEFIT OF A TITLE COMMITMENT.
10. FLOOD HAZARD INFORMATION WAS OBTAINED FROM THE FEMA FLOOD MAP SERVICE CENTER WEB SITE.
11. SURVEY WAS PERFORMED BY ZAMORA LLC FROM JANUARY TO OCTOBER 2020.
12. PLANT GRID BEARING BASIS WAS DETERMINED BY HOLDING A LINE, BEGINNING AT AN IRON ROD FOUND AT THE SOUTHEAST CORNER OF THE CITY OF AUSTIN 20 ACRE WWTP PROPERTY, TEXAS STATE PLANE COORDINATE SYSTEM (GRID), CENTRAL ZONE, NORTH AMERICAN DATUM OF 1983 (NAD 83, US SURVEY FEET) N10090083.89, E3169576.28, PLANT GRID, N821.40,E5091.62 AND A IRON ROD FOUND AT THE INTERSECTION OF EASTERLY PROPERTY LINE OF THE CITY OF AUSTIN 20 ACRE WWTP SITE AND THE INTERSECTION WITH THE NORTH EASEMENT LINE OF A SOUTHWESTERN BELL TELEPHONE COMPANY L.P. 3.228 ACRES DOCUMENT NUMBER 2003249302 O.P.R.T.C.TX., TEXAS STATE PLANE COORDINATE SYSTEM (GRID), CENTRAL ZONE, NORTH AMERICAN DATUM OF 1983 (NAD 83, US SURVEY FEET) N10090572.79, E3169087.35, PLANT GRID, N5691.43, E5091.62.

   NAD 83 GRID BEARING = N45°00'05"W 691.47 FEET.

   PLANT GRID BEARING = N45°00'05"W 691.47 FEET.
13. WATER EASEMENT BEARING BASIS WAS DETERMINED BY HOLDING A 1/2-INCH ROD, FOUND AT THE NORTHWEST CORNER OF 20.00 ACRE TRACT (TEXAS STATE PLANE NAD 83(93), CENTRAL ZONE, SURFACE COORDINATES, COMBINED SCALE FACTOR – 1.00007, A 1/2-INCH IRON ROD FOUND AT THE NORTHEAST CORNER OF 20.00 ACRE TRACT (TEXAS STATE PLANE NAD 83(93), CENTRAL ZONE, SURFACE COORDINATES, COMBINED SCALE FACTOR –1.00007.

    NAD 83(93) GRID BEARING = S 45°00'33" E, 780.08 FEET.
    PLANT GRID BEARING = S 00°00'00" E, 780.08 FEET.

THIS CONFORMED DOCUMENT IS RELEASED FOR THE CONVENIENCE OF THE CONTRACTOR UNDER THE AUTHORITY OF:

CASEY G. WAUTERS, P.E. 11-01-22
TX LIC NO. 93889 DATE

SEE DISCLAIMER FOR LIMITATIONS OF USE.

CONTRACT DOCUMENTS DATED JUNE 10, 2022, AS PART OF THE BIDDING DOCUMENTS (DRAWINGS AND SPECIFICATIONS) AND SUBSEQUENTLY ISSUED ADDENDA HAVE BEEN MERGED INTO ONE CONFORMING SET OF DOCUMENTS FOR THE CONVENIENCE OF THE CONTRACTOR. IF INCONSISTENCIES OR AMBIGUITIES BETWEEN "CONFORMED" DOCUMENTS AND CONTRACT DOCUMENTS ARE FOUND, THE CONTRACT DOCUMENTS SHALL GOVERN.

REV	DATE	BY	DESCRIPTION
			CONFORMED DOCUMENTS

DESIGNED CW
DRAWN AW
CHECKED SGE
DATE FEBRUARY 2022

** ORIGINAL SEALED BY CASEY G. WAUTERS, P.E. 2/28/2022 TX PE 93889 **

AECOM TECHNICAL SERVICES INC. 13640 BRIARWICK DRIVE, SUITE 200 AUSTIN, TEXAS 78729 WWW.AECOM.COM TBPE REG. NO. F-3580

carollo TBPE No. F-882

CITY OF AUSTIN FOUNDED 1839

CITY OF AUSTIN

CITY OF AUSTIN
WILD HORSE RANCH WWTP EXPANSION
GENERAL
OVERALL SITE SURVEY MAP

VERIFY SCALES
BAR IS ONE INCH ON ORIGINAL DRAWING
0 — 1"
IF NOT ONE INCH ON THIS SHEET, ADJUST SCALES ACCORDINGLY

JOB NO. 10976A.10
DRAWING NO. 00G14
SHEET NO. 16 OF 464

LAST SAVED BY:

PROJECT NO. 9585A10 FILE NAME: 9585A10_SheetSeed.dgn

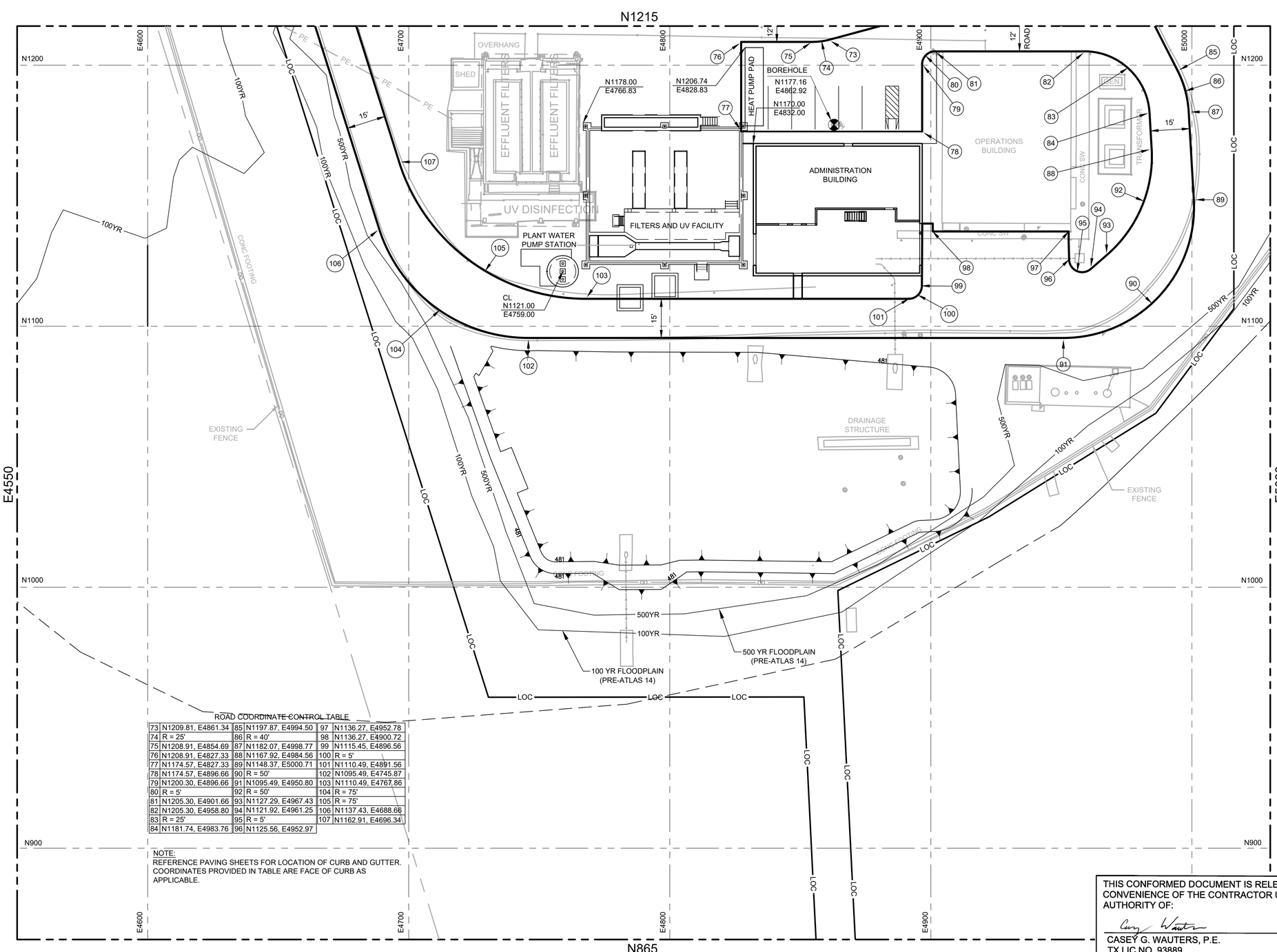

ROAD COORDINATE CONTROL TABLE

73	N1209.81, E4861.34	85	N1197.87, E4994.50	97	N1136.27, E4952.78
74	R = 25'	86	R = 40'	98	N1136.27, E4900.72
75	N1208.91, E4854.69	87	N1182.07, E4998.77	99	N1115.45, E4896.56
76	N1208.91, E4827.33	88	N1167.92, E4984.56	100	R = 5'
77	N1174.57, E4827.33	89	N1148.37, E5000.71	101	N1110.49, E4891.56
78	N1174.57, E4896.66	90	R = 50'	102	N1095.49, E4745.87
79	N1200.30, E4896.66	91	N1095.49, E4950.80	103	N1110.49, E4767.86
80	R = 5'	92	R = 50'	104	R = 75'
81	N1205.30, E4901.66	93	N1127.29, E4967.43	105	R = 75'
82	N1205.30, E4958.80	94	N1121.92, E4961.25	106	N1137.43, E4688.66
83	R = 25'	95	R = 5'	107	N1162.91, E4696.34
84	N1181.74, E4983.76	96	N1125.56, E4952.97		

NOTE:
REFERENCE PAVING SHEETS FOR LOCATION OF CURB AND GUTTER. COORDINATES PROVIDED IN TABLE ARE FACE OF CURB AS APPLICABLE.

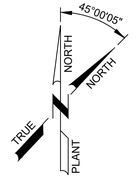

SCALE: 1" = 20'

LEGEND

- EXISTING
- PROPOSED
- 100YR — 100 YEAR FLOODPLAIN
- 500YR — 500 YEAR FLOODPLAIN
- LOC — LOC — LIMITS OF CONSTRUCTION

NOTES:

1. REFERENCE DRAWING 00G06 FOR OVERALL WWTP SITE PLAN.
2. REFERENCE DRAWING 00G14 FOR ALL SURVEY CONTROL POINTS AND COORDINATES.
3. PLANT COORDINATES SHOWN FOR STRUCTURE LOCATIONS ARE REFERENCED TO THE OUTSIDE FACE OF CONCRETE FOUNDATION AT FINISHED GRADE OR TO CENTER LINE OF STRUCTURE. UNLESS NOTED OTHERWISE ON PLANS. STRUCTURES WITH ONE COORDINATE SHOWN HAVE WALLS PARALLEL WITH PLANT GRID, UNLESS NOTED OTHERWISE.
4. ACTUAL FIELD CONDITIONS MAY BE DIFFERENT FROM THOSE SHOWN IN THIS DRAWING. CONTRACTOR TO FIELD VERIFY INSTALLED CONDITIONS IMPACTING OR IMPACTED BY THIS WORK PRIOR TO INITIATING WORK.
5. CONTRACTOR TO COORDINATE ALL STORAGE AREAS WITH THE OWNER TO ENSURE NO ACCESS WAYS, MANHOLES OR VALVES ARE BLOCKED OR COVERED.
6. ALL ACCESS WAYS AND DRIVEWAYS TO BE KEPT CLEAR TO ALLOW OPERATORS ACCESS TO ALL AREAS FOR MAINTENANCE AND EMERGENCIES. CONTRACTOR TO COORDINATE THE DELIVERY AND LOADING / UNLOADING OF EQUIPMENT WITH OWNER AT A MINIMUM OF 48 HOURS PRIOR TO DELIVERY.
7. CONTRACTOR TO NOT OBSTRUCT DELIVERIES ON THE PLANT ACCESS ROAD. WORK WITHIN THE ACCESS ROAD MUST BE DONE IN A WAY THAT CAN BE COVERED TO PROVIDE DELIVERY ACCESS. ACCESS ROAD CLOSURES MUST BE AGREED UPON WITH THE CITY OF AUSTIN IN ADVANCE.
8. CONTRACTOR SHALL NOT BLOCK DRAINAGE SWALES, DITCHES, CULVERTS, OR ANY OTHER STORM WATER DRAINAGE WAY AT ANY TIME DURING EXECUTION OF THE PROJECT. DAMAGE RESULTING FROM FLOODING DUE TO BLOCKED DRAINAGE WAYS WILL BE THE RESPONSIBILTY OF THE CONTRACTOR AT NO ADDITIONAL PAY.

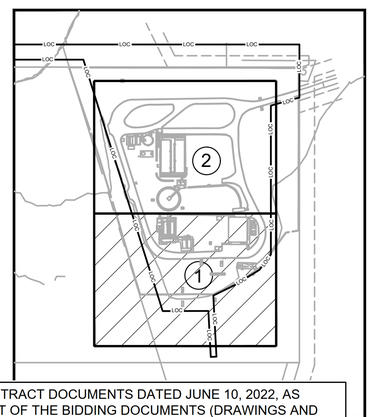

THIS CONFORMED DOCUMENT IS RELEASED FOR THE CONVENIENCE OF THE CONTRACTOR UNDER THE AUTHORITY OF:

CASEY G. WAUTERS, P.E.
TX LIC NO. 93889

11-01-22
DATE

SEE DISCLAIMER FOR LIMITATIONS OF USE.

CONTRACT DOCUMENTS DATED JUNE 10, 2022, AS PART OF THE BIDDING DOCUMENTS (DRAWINGS AND SPECIFICATIONS) AND SUBSEQUENTLY ISSUED ADDENDA HAVE BEEN MERGED INTO ONE CONFORMING SET OF DOCUMENTS FOR THE CONVENIENCE OF THE CONTRACTOR. IF INCONSISTENCIES OR AMBIGUITIES BETWEEN "CONFORMED" DOCUMENTS AND CONTRACT DOCUMENTS ARE FOUND, THE CONTRACT DOCUMENTS SHALL GOVERN.

REV	DATE	BY	DESCRIPTION
			CONFORMED DOCUMENTS

DESIGNED CW
DRAWN AW
CHECKED SGE
DATE FEBRUARY 2022

** ORIGINAL SEALED BY CASEY G. WAUTERS, P.E. 2/28/2022 TX PE 93889 **

AECOM TECHNICAL SERVICES INC.
13640 BRIARWICK DRIVE, SUITE 200
AUSTIN, TEXAS 78729
WWW.AECOM.COM
TBPE REG. NO. F-3580

TBPE No. F-882

CITY OF AUSTIN
FOUNDED 1839

CITY OF AUSTIN

CITY OF AUSTIN
WILD HORSE RANCH WWTP EXPANSION
GENERAL
DIMENSIONAL CONTROL PLAN
SHEET 1 OF 4

VERIFY SCALES
BAR IS ONE INCH ON ORIGINAL DRAWING
0 — 1"
IF NOT ONE INCH ON THIS SHEET, ADJUST SCALES ACCORDINGLY

JOB NO. 10976A.10
DRAWING NO. 00G15
SHEET NO. 17 OF 464

LAST SAVED BY:

PROJECT NO. 9585A10 FILE NAME: 9585A10_SheetSeed.dgn

N1565

N1215

E4550

E5030

E4600 E4700 E4800 E4900 E5000

N1600 N1500 N1400 N1300

ROAD COORDINATE CONTROL TABLE																			
1	N1423.12, E4598.48	7	N1520.00, E4889.47	18	R = 25'	29	N1505.00, E4666.13	49	N1363.61, E4933.01	60	R = 25'								
2	R = 75'	8	R = 75'	19	N1430.00, E4889.97	30	R = 5'	50	N1362.55, E4918.05	61	N1288.79, E4950.87								
3	N1445.70, E4595.00	9	N1519.15, E4900.76	20	N1430.00, E4646.14	31	N1500.00, E4671.00	40	N1495.33, E4809.67	51	R = 100'	62	N1277.65, E4938.55	71	R = 50'	115	N1377.65, E4628.56		
4	N1470.00, E4595.00	10	N1510.56, E4957.14	21	R = 25'	32	N1495.67, E4671.00	41	R = 10'	52	R = 115'	63	R = 100'	72	N1215.56, E4882.61				
5	R = 50'	11	R = 75'	22	N1397.47, E4622.30	33	N1495.67, E4683.00	42	N1505.00, E4819.67	53	N1345.31, E4936.03	64	R = 115'	108	N1321.78, E4646.20				
6	N1520.00, E4645.00	12	N1511.76, E4985.85	23	N1445.00, E4650.00	34	N1500.00, E4683.00	43	N1505.00, E4895.00	54	N1341.50, E4921.53	65	N1268.91, E4958.43	109	R = 5'				
		13	N1498.87, E4989.44	24	R = 25'	35	R = 5'	44	R = 25'	55	R = 25'	66	N1262.11, E4945.06	110	N1328.28, E4650.82				
		14	N1496.58, E4981.94	25	N1470.00, E4625.00	36	N1505.00, E4687.87	45	N1480.00, E4920.00	56	N1306.71, E4898.25	67	N1253.65, E4949.37	111	N1328.84, E4670.00				
		15	R = 75'	26	N1480.00, E4625.00	37	N1505.00, E4771.50	46	N1470.00, E4920.00	57	N1306.71, E4887.46	68	R = 25'	112	N1367.17, E4670.00				
		16	N1419.54, E4929.04	27	R = 25'	38	R = 10'	47	R = 25'	58	N1294.71, E4887.46	69	N1217.30, E4927.10	113	N1367.17, E4642.86				
		17	N1406.77, E4914.91	28	N1505.00, E4650.00	39	N1495.33, E4781.50	48	N1445.00, E4895.00	59	N1294.71, E4914.85	70	N1217.30, E4895.66	114	R = 15'				

NOTE:
REFERENCE PAVING SHEETS FOR LOCATION OF CURB AND GUTTER. COORDINATES PROVIDED IN TABLE ARE FACE OF CURB AS APPLICABLE.

REFERENCE ACCESS ROAD DRAWINGS FOR CONTINUATION

N1495.00 E4637.00

N1495.00 E4650.00

N1502.00 E4844.00

N1482.50 E4770.00

HEADWORKS ODOR CONTROL

HEADWORKS

SUBSTATION No. 1

BOREHOLE N1469.06 E4786.94

BOREHOLE N1462.99 E4872.17

CONTROL POINT #1 PLANT GRID N1497.79 E5002.34

15'

N1425.50 E4800.50

N1416.18 E4839.92

N1428.00 E4850.00

WAS PUMP STATION

INFLUENT LIFT STATION

SLUDGE HOLDING TANK No. 2

N1385.58 E4670.00

CONC.

LIFT STATION ODOR CONTROL

500 YR FLOODPLAIN (PRE-ATLAS 14)

THICKENING BUILDING

N1388.00 E4804.50

RAS SPLITTER BOX

BOREHOLE N1390.77 E4869.83

AERATION BASIN No. 3

AERATION BASIN No. 4

AERATION BASIN No. 1

AERATION BASIN No. 2

CONC SIDEWALK

ELECT PANEL

N1309.00 E4842.35

N1318.67 E4805.50

ML SPLITTER BOX

RAS PUMP STATION No. 2

RAS PUMP STATION No. 1

CONC SW

SLUDGE HOLDING TANK No. 1

CL TANK N1297.00 E4685.50

BOREHOLE N1295.76 E4673.01

N1250.92 E4681.33

PLANT DRAIN PUMP STATION

N1230.00 E4685.00

SECONDARY CLARIFIER No. 1

SECONDARY CLARIFIER No. 2

SECONDARY CLARIFIER No. 3

N1253.35 E4820.85

N1253.35 E4894.85

BOREHOLE N1252.80 E4821.54

ELEC VAULT

500 YR FLOODPLAIN (PRE-ATLAS 14)

EXISTING FENCE

CONC FOOTING

EXISTING GATE

100 YR FLOODPLAIN (PRE-ATLAS 14)

WASTEWATER MANHOLE TOP ELEV=435.36 UNABLE TO INVERT

LOC

500YR

100YR

PE

12' ROAD

45°00'05"
NORTH
NORTH
TRUE
PLANT

SCALE: 1" = 20'

LEGEND

- EXISTING
- PROPOSED
- 100YR — 100 YEAR FLOODPLAIN
- 500YR — 500 YEAR FLOODPLAIN
- LOC — LOC — LIMITS OF CONSTRUCTION

NOTES:

1. REFERENCE DRAWING 00G06 FOR OVERALL WWTP SITE PLAN.
2. REFERENCE DRAWING 00G14 FOR ALL SURVEY CONTROL POINTS AND COORDINATES.
3. PLANT COORDINATES SHOWN FOR STRUCTURE LOCATIONS ARE REFERENCED TO THE OUTSIDE FACE OF CONCRETE FOUNDATION AT FINISHED GRADE OR TO CENTER LINE OF STRUCTURE. UNLESS NOTED OTHERWISE ON PLANS. STRUCTURES WITH ONE COORDINATE SHOWN HAVE WALLS PARALLEL WITH PLANT GRID, UNLESS NOTED OTHERWISE.
4. ACTUAL FIELD CONDITIONS MAY BE DIFFERENT FROM THOSE SHOWN IN THIS DRAWING. CONTRACTOR TO FIELD VERIFY INSTALLED CONDITIONS IMPACTING OR IMPACTED BY THIS WORK PRIOR TO INITIATING WORK.
5. CONTRACTOR TO COORDINATE ALL STORAGE AREAS WITH THE OWNER TO ENSURE NO ACCESS WAYS, MANHOLES OR VALVES ARE BLOCKED OR COVERED.
6. ALL ACCESS WAYS AND DRIVEWAYS TO BE KEPT CLEAR TO ALLOW OPERATORS ACCESS TO ALL AREAS FOR MAINTENANCE AND EMERGENCIES. CONTRACTOR TO COORDINATE THE DELIVERY AND LOADING / UNLOADING OF EQUIPMENT WITH OWNER AT A MINIMUM OF 48 HOURS PRIOR TO DELIVERY.
7. CONTRACTOR TO NOT OBSTRUCT DELIVERIES ON THE PLANT ACCESS ROAD. WORK WITHIN THE ACCESS ROAD MUST BE DONE IN A WAY THAT CAN BE COVERED TO PROVIDE DELIVERY ACCESS. ACCESS ROAD CLOSURES MUST BE AGREED UPON WITH THE CITY OF AUSTIN IN ADVANCE.
8. CONTRACTOR SHALL NOT BLOCK DRAINAGE SWALES, DITCHES, CULVERTS, OR ANY OTHER STORM WATER DRAINAGE WAY AT ANY TIME DURING EXECUTION OF THE PROJECT. DAMAGE RESULTING FROM FLOODING DUE TO BLOCKED DRAINAGE WAYS WILL BE THE RESPONSIBILTY OF THE CONTRACTOR AT NO ADDITIONAL PAY.

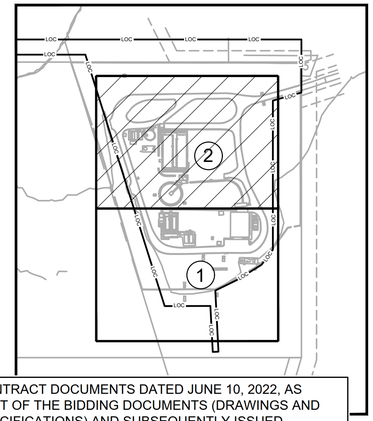

THIS CONFORMED DOCUMENT IS RELEASED FOR THE CONVENIENCE OF THE CONTRACTOR UNDER THE AUTHORITY OF:

CASEY G. WAUTERS, P.E.
TX LIC NO. 93889

11-01-22
DATE

SEE DISCLAIMER FOR LIMITATIONS OF USE.

CONTRACT DOCUMENTS DATED JUNE 10, 2022, AS PART OF THE BIDDING DOCUMENTS (DRAWINGS AND SPECIFICATIONS) AND SUBSEQUENTLY ISSUED ADDENDA HAVE BEEN MERGED INTO ONE CONFORMING SET OF DOCUMENTS FOR THE CONVENIENCE OF THE CONTRACTOR. IF INCONSISTENCIES OR AMBIGUITIES BETWEEN "CONFORMED" DOCUMENTS AND CONTRACT DOCUMENTS ARE FOUND, THE CONTRACT DOCUMENTS SHALL GOVERN.

REV	DATE	BY	DESCRIPTION
			CONFORMED DOCUMENTS

DESIGNED CW
DRAWN AW
CHECKED SGE
DATE FEBRUARY 2022

**
ORIGINAL
SEALED BY
CASEY G. WAUTERS, P.E.
2/28/2022
TX PE 93889
**

AECOM TECHNICAL SERVICES INC.
13640 BRIARWICK DRIVE, SUITE 200
AUSTIN, TEXAS 78729
WWW.AECOM.COM
TBPE REG. NO. F-3580

TBPE No. F-882

CITY OF AUSTIN

CITY OF AUSTIN
WILD HORSE RANCH WWTP EXPANSION
GENERAL
DIMENSIONAL CONTROL PLAN
SHEET 2 OF 4

VERIFY SCALES
BAR IS ONE INCH ON ORIGINAL DRAWING
0 1"
IF NOT ONE INCH ON THIS SHEET, ADJUST SCALES ACCORDINGLY

JOB NO. 10976A.10
DRAWING NO. 00G16
SHEET NO. 18 OF 464

LAST SAVED BY:

PROJECT NO. 9585A10 FILE NAME: 9585A10_SheetSeed.dgn

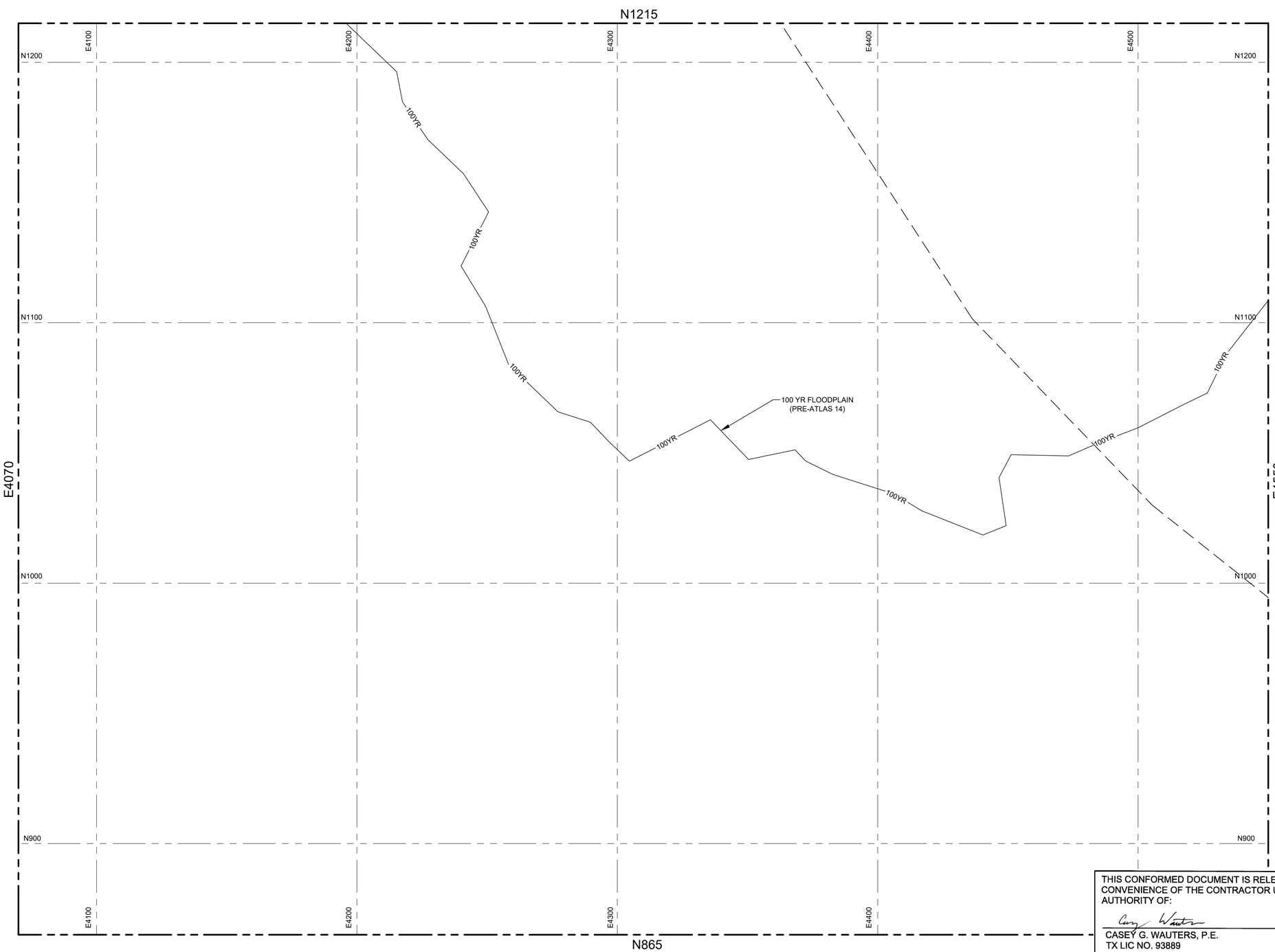

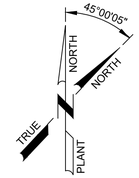

SCALE: 1" = 20'

LEGEND

- EXISTING
- PROPOSED
- 100YR — 100 YEAR FLOODPLAIN
- 500YR — 500 YEAR FLOODPLAIN
- LOC — LOC — LIMITS OF CONSTRUCTION

NOTES:

1. REFERENCE DRAWING 00G06 FOR OVERALL WWTP SITE PLAN.
2. REFERENCE DRAWING 00G14 FOR ALL SURVEY CONTROL POINTS AND COORDINATES.
3. PLANT COORDINATES SHOWN FOR STRUCTURE LOCATIONS ARE REFERENCED TO THE OUTSIDE FACE OF CONCRETE FOUNDATION AT FINISHED GRADE OR TO CENTER LINE OF STRUCTURE, UNLESS NOTED OTHERWISE ON PLANS. STRUCTURES WITH ONE COORDINATE SHOWN HAVE WALLS PARALLEL WITH PLANT GRID, UNLESS NOTED OTHERWISE.
4. ACTUAL FIELD CONDITIONS MAY BE DIFFERENT FROM THOSE SHOWN IN THIS DRAWING. CONTRACTOR TO FIELD VERIFY INSTALLED CONDITIONS IMPACTING OR IMPACTED BY THIS WORK PRIOR TO INITIATING WORK.
5. CONTRACTOR TO COORDINATE ALL STORAGE AREAS WITH THE OWNER TO ENSURE NO ACCESS WAYS, MANHOLES OR VALVES ARE BLOCKED OR COVERED.
6. ALL ACCESS WAYS AND DRIVEWAYS TO BE KEPT CLEAR TO ALLOW OPERATORS ACCESS TO ALL AREAS FOR MAINTENANCE AND EMERGENCIES. CONTRACTOR TO COORDINATE THE DELIVERY AND LOADING / UNLOADING OF EQUIPMENT WITH OWNER AT A MINIMUM OF 48 HOURS PRIOR TO DELIVERY.
7. CONTRACTOR TO NOT OBSTRUCT DELIVERIES ON THE PLANT ACCESS ROAD. WORK WITHIN THE ACCESS ROAD MUST BE DONE IN A WAY THAT CAN BE COVERED TO PROVIDE DELIVERY ACCESS. ACCESS ROAD CLOSURES MUST BE AGREED UPON WITH THE CITY OF AUSTIN IN ADVANCE.
8. CONTRACTOR SHALL NOT BLOCK DRAINAGE SWALES, DITCHES, CULVERTS, OR ANY OTHER STORM WATER DRAINAGE WAY AT ANY TIME DURING EXECUTION OF THE PROJECT. DAMAGE RESULTING FROM FLOODING DUE TO BLOCKED DRAINAGE WAYS WILL BE THE RESPONSIBILTY OF THE CONTRACTOR AT NO ADDITIONAL PAY.

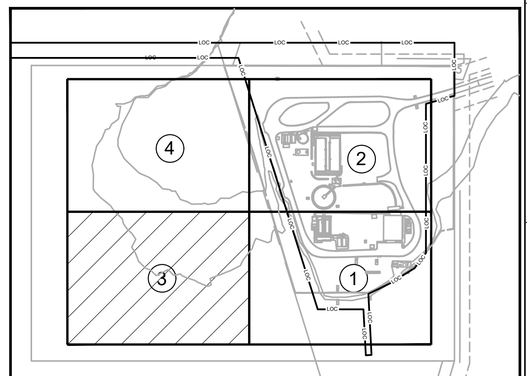

THIS CONFORMED DOCUMENT IS RELEASED FOR THE CONVENIENCE OF THE CONTRACTOR UNDER THE AUTHORITY OF:

CASEY G. WAUTERS, P.E.
TX LIC NO. 93889

11-01-22
DATE

SEE DISCLAIMER FOR LIMITATIONS OF USE.

CONTRACT DOCUMENTS DATED JUNE 10, 2022, AS PART OF THE BIDDING DOCUMENTS (DRAWINGS AND SPECIFICATIONS) AND SUBSEQUENTLY ISSUED ADDENDA HAVE BEEN MERGED INTO ONE CONFORMING SET OF DOCUMENTS FOR THE CONVENIENCE OF THE CONTRACTOR. IF INCONSISTENCIES OR AMBIGUITIES BETWEEN "CONFORMED" DOCUMENTS AND CONTRACT DOCUMENTS ARE FOUND, THE CONTRACT DOCUMENTS SHALL GOVERN.

REV	DATE	BY	DESCRIPTION
			CONFORMED DOCUMENTS

DESIGNED CW
DRAWN AW
CHECKED SGE
DATE FEBRUARY 2022

** ORIGINAL SEALED BY CASEY G. WAUTERS, P.E. 2/28/2022 TX PE 93889 **

AECOM TECHNICAL SERVICES INC.
13640 BRIARWICK DRIVE, SUITE 200
AUSTIN, TEXAS 78729
WWW.AECOM.COM
TBPE REG. NO. F-3580

TBPE No. F-882

CITY OF AUSTIN

CITY OF AUSTIN
WILD HORSE RANCH WWTP EXPANSION
GENERAL
DIMENSIONAL CONTROL PLAN
SHEET 3 OF 4

VERIFY SCALES
BAR IS ONE INCH ON ORIGINAL DRAWING
0 1"
IF NOT ONE INCH ON THIS SHEET, ADJUST SCALES ACCORDINGLY

JOB NO. 10976A.10
DRAWING NO. 00G17
SHEET NO. 19 OF 464

LAST SAVED BY:

PROJECT NO. 9585A10 FILE NAME: 9585A10_SheetSeed.dgn

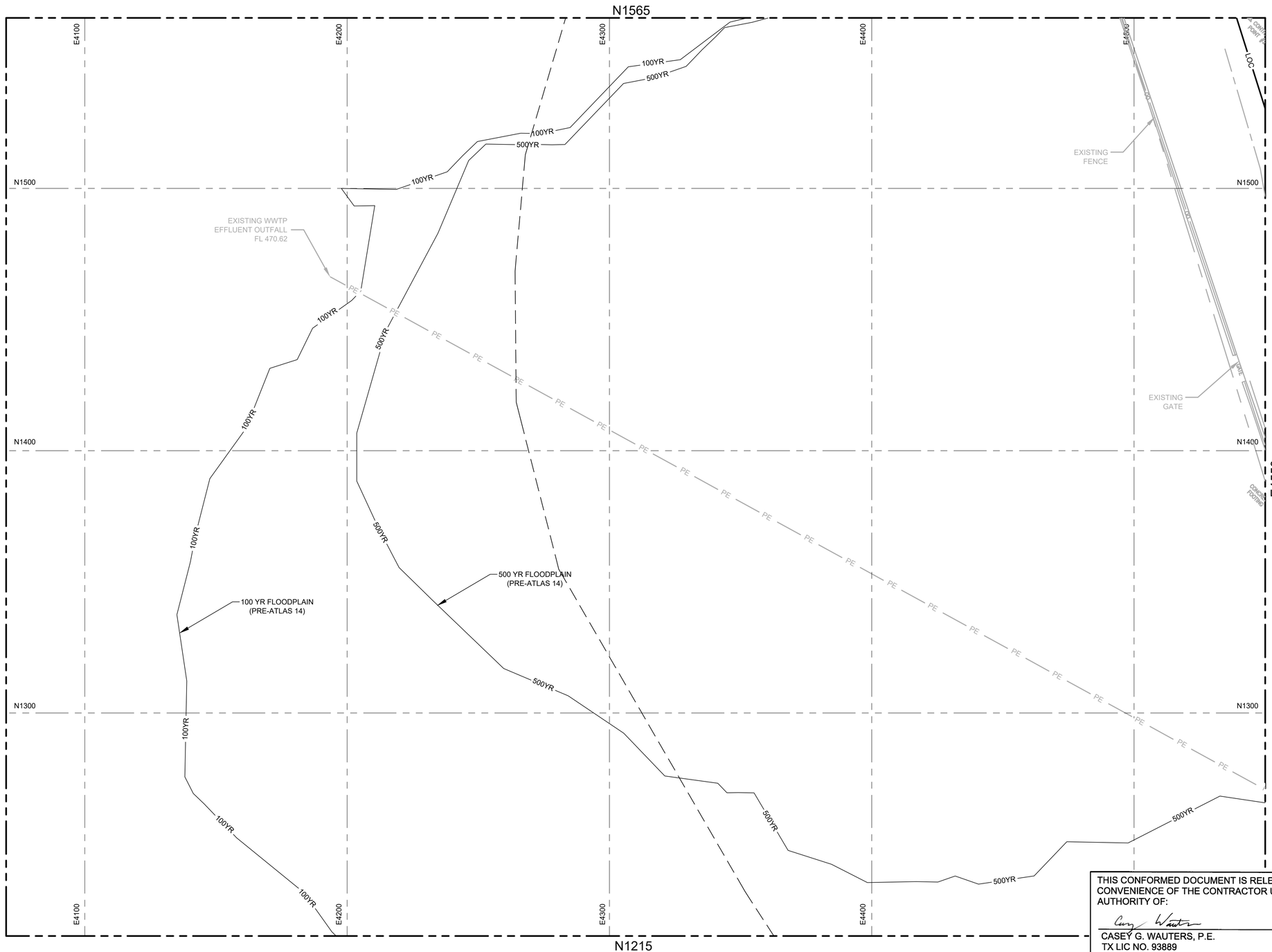

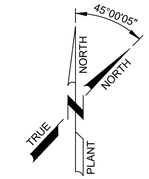

SCALE: 1" = 20'

LEGEND

- EXISTING
- PROPOSED
- 100YR — 100 YEAR FLOODPLAIN
- 500YR — 500 YEAR FLOODPLAIN
- LOC — LOC — LIMITS OF CONSTRUCTION

NOTES:

1. REFERENCE DRAWING 00G06 FOR OVERALL WWTP SITE PLAN.
2. REFERENCE DRAWING 00G14 FOR ALL SURVEY CONTROL POINTS AND COORDINATES.
3. PLANT COORDINATES SHOWN FOR STRUCTURE LOCATIONS ARE REFERENCED TO THE OUTSIDE FACE OF CONCRETE FOUNDATION AT FINISHED GRADE OR TO CENTER LINE OF STRUCTURE. UNLESS NOTED OTHERWISE ON PLANS. STRUCTURES WITH ONE COORDINATE SHOWN HAVE WALLS PARALLEL WITH PLANT GRID, UNLESS NOTED OTHERWISE.
4. ACTUAL FIELD CONDITIONS MAY BE DIFFERENT FROM THOSE SHOWN IN THIS DRAWING. CONTRACTOR TO FIELD VERIFY INSTALLED CONDITIONS IMPACTING OR IMPACTED BY THIS WORK PRIOR TO INITIATING WORK.
5. CONTRACTOR TO COORDINATE ALL STORAGE AREAS WITH THE OWNER TO ENSURE NO ACCESS WAYS, MANHOLES OR VALVES ARE BLOCKED OR COVERED.
6. ALL ACCESS WAYS AND DRIVEWAYS TO BE KEPT CLEAR TO ALLOW OPERATORS ACCESS TO ALL AREAS FOR MAINTENANCE AND EMERGENCIES. CONTRACTOR TO COORDINATE THE DELIVERY AND LOADING / UNLOADING OF EQUIPMENT WITH OWNER AT A MINIMUM OF 48 HOURS PRIOR TO DELIVERY.
7. CONTRACTOR TO NOT OBSTRUCT DELIVERIES ON THE PLANT ACCESS ROAD. WORK WITHIN THE ACCESS ROAD MUST BE DONE IN A WAY THAT CAN BE COVERED TO PROVIDE DELIVERY ACCESS. ACCESS ROAD CLOSURES MUST BE AGREED UPON WITH THE CITY OF AUSTIN IN ADVANCE.
8. CONTRACTOR SHALL NOT BLOCK DRAINAGE SWALES, DITCHES, CULVERTS, OR ANY OTHER STORM WATER DRAINAGE WAY AT ANY TIME DURING EXECUTION OF THE PROJECT. DAMAGE RESULTING FROM FLOODING DUE TO BLOCKED DRAINAGE WAYS WILL BE THE RESPONSIBILTY OF THE CONTRACTOR AT NO ADDITIONAL PAY.

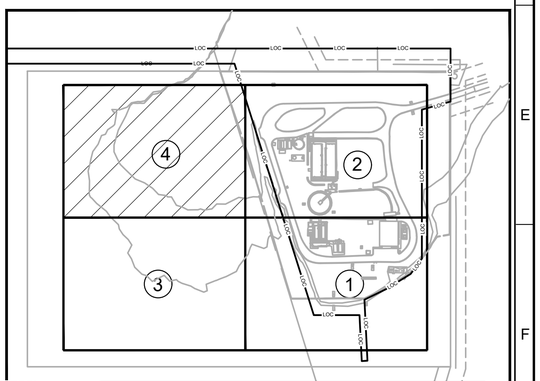

THIS CONFORMED DOCUMENT IS RELEASED FOR THE CONVENIENCE OF THE CONTRACTOR UNDER THE AUTHORITY OF:

CASEY G. WAUTERS, P.E. — 11-01-22
TX LIC NO. 93889 — DATE

SEE DISCLAIMER FOR LIMITATIONS OF USE.

CONTRACT DOCUMENTS DATED JUNE 10, 2022, AS PART OF THE BIDDING DOCUMENTS (DRAWINGS AND SPECIFICATIONS) AND SUBSEQUENTLY ISSUED ADDENDA HAVE BEEN MERGED INTO ONE CONFORMING SET OF DOCUMENTS FOR THE CONVENIENCE OF THE CONTRACTOR. IF INCONSISTENCIES OR AMBIGUITIES BETWEEN "CONFORMED" DOCUMENTS AND CONTRACT DOCUMENTS ARE FOUND, THE CONTRACT DOCUMENTS SHALL GOVERN.

REV	DATE	BY	DESCRIPTION
			CONFORMED DOCUMENTS

DESIGNED CW
DRAWN AW
CHECKED SGE
DATE FEBRUARY 2022

**
ORIGINAL
SEALED BY
CASEY G. WAUTERS, P.E.
2/28/2022
TX PE 93889
**

AECOM TECHNICAL SERVICES INC.
13640 BRIARWICK DRIVE, SUITE 200
AUSTIN, TEXAS 78729
WWW.AECOM.COM
TBPE REG. NO. F-3580

TBPE No. F-882

CITY OF AUSTIN

CITY OF AUSTIN
WILD HORSE RANCH WWTP EXPANSION
GENERAL
DIMENSIONAL CONTROL PLAN
SHEET 4 OF 4

VERIFY SCALES
BAR IS ONE INCH ON ORIGINAL DRAWING
0 — 1"
IF NOT ONE INCH ON THIS SHEET, ADJUST SCALES ACCORDINGLY

JOB NO. 10976A.10
DRAWING NO. 00G18
SHEET NO. 20 OF 464

LAST SAVED BY:

Plot Date: 10-OCT-2022 8:07:48 AM
User: LDietzel
PlotScale: 1:1
DesignScript: Carollo_Std_Pen_v0905.pen
ColorTable: gshade.ctb
Model: Layout1
LAST SAVED BY: ldietzel

EQUIPMENT SCHEDULE

TAG ID	EQUIPMENT AREA	SPEC. NO.	REMARKS
LS-PUMP-01	INFLUENT LIFT STATION	11305	
LS-PUMP-02	INFLUENT LIFT STATION	11305	
LS-PUMP-03	INFLUENT LIFT STATION	11305	
LS-PUMP-04	INFLUENT LIFT STATION	11305	
LS-PUMP-05	INFLUENT LIFT STATION	11305	
LS-ODORCONTROL-01	INFLUENT LIFT STATION	11395A	
LS-BLOWER-01	INFLUENT LIFT STATION	11395A	
LS-RECYCLEPUMP-01	INFLUENT LIFT STATION	11395A	
HW-SCREEN-01	HEADWORKS	11327	
HW-SCREEN-02	HEADWORKS	11327	
HW-COMPACTOR-01	HEADWORKS	11333	
HW-GRITMECH-01	HEADWORKS	11323	
HW-GRITWASHER-01	HEADWORKS	11324	
HW-CONVEYOR-01	HEADWORKS	14555	
HW-GRITPUMP-01	HEADWORKS	11312C	
HW-ODORCONTROL-01	HEADWORKS	11395A	
HW-BLOWER-01	HEADWORKS	11395A	
HW-RECYCLEPUMP-01	HEADWORKS	11395A	
AB-AXB1-MIX-01	AERATION BASIN	11317B	
AB-AXB1-MIX-02	AERATION BASIN	11317B	
AB-AXB1-MIX-03	AERATION BASIN	11317B	
AB-AXB1-MIX-04	AERATION BASIN	11317B	
AB-AXB2-MIX-01	AERATION BASIN	11317B	
AB-AXB2-MIX-02	AERATION BASIN	11317B	
AB-AXB2-MIX-03	AERATION BASIN	11317B	
AB-AXB2-MIX-04	AERATION BASIN	11317B	
AB-AXB3-MIX-01	AERATION BASIN	11317B	
AB-AXB3-MIX-02	AERATION BASIN	11317B	
AB-AXB3-MIX-03	AERATION BASIN	11317B	
AB-AXB3-MIX-04	AERATION BASIN	11317B	
AB-AXB4-MIX-01	AERATION BASIN	11317B	
AB-AXB4-MIX-02	AERATION BASIN	11317B	
AB-AXB4-MIX-03	AERATION BASIN	11317B	
AB-AXB4-MIX-04	AERATION BASIN	11317B	
AB-RECYCLEPUMP-01	AERATION BASIN	11312P	
AB-RECYCLEPUMP-02	AERATION BASIN	11312P	
AB-RECYCLEPUMP-03	AERATION BASIN	11312P	
AB-RECYCLEPUMP-04	AERATION BASIN	11312P	
AB-RECYCLEPUMP-05	AERATION BASIN	11312P	
AB-RECYCLEPUMP-06	AERATION BASIN	11312P	
AB-RECYCLEPUMP-07	AERATION BASIN	11312P	
AB-RECYCLEPUMP-08	AERATION BASIN	11312P	
AB-WASPUMP-01	AERATION BASIN	NONE	EXISTING
AB-WASPUMP-02	AERATION BASIN	NONE	EXISTING
AB-GRINDER-01	AERATION BASIN	NONE	EXISTING
SC-CLARIFIERMECH-01	SECONDARY CLARIFIER	11353	EXISTING
SC-CLARIFIERMECH-02	SECONDARY CLARIFIER	11353	
SC-CLARIFIERMECH-03	SECONDARY CLARIFIER	11353	
SC-SCUMPUMP-01	SECONDARY CLARIFIER	11312C	
SC-SCUMPUMP-02	SECONDARY CLARIFIER	11312C	
SC-SCUMPUMP-03	SECONDARY CLARIFIER	11312C	
SC-SCUMPUMP-04	SECONDARY CLARIFIER	11312C	
SC-RASPUMP-01	SECONDARY CLARIFIER	11312F	REPLACE EXISTING RAS PUMP
SC-RASPUMP-02	SECONDARY CLARIFIER	11312F	REPLACE EXISTING RAS PUMP
SC-RASPUMP-03	SECONDARY CLARIFIER	11312F	
SC-RASPUMP-04	SECONDARY CLARIFIER	11312F	
SC-RASPUMP-05	SECONDARY CLARIFIER	11312F	
FLTR-FILTER-01	FILTERS AND UV FACILITY	11366B	EXISTING
FLTR-FILTER-02	FILTERS AND UV FACILITY	11366B	EXISTING
FLTR-BACKWASHPUMP-01	FILTERS AND UV FACILITY	11366B	EXISTING
FLTR-BACKWASHPUMP-02	FILTERS AND UV FACILITY	11366B	EXISTING
FLTR-UVBANK-01	FILTERS AND UV FACILITY	11289	
FLTR-UVBANK-02	FILTERS AND UV FACILITY	11289	
FLTR-UVBANK-03	FILTERS AND UV FACILITY	11289	
FLTR-UVBANK-04	FILTERS AND UV FACILITY	11289	
FLTR-SUMPUMP-01	FILTERS AND UV FACILITY	11312J	
FLTR-SUMPUMP-02	FILTERS AND UV FACILITY	11312J	
FLTR-NPWPUMP-01	FILTERS AND UV FACILITY	11312D	
FLTR-NPWPUMP-02	FILTERS AND UV FACILITY	11312D	
FLTR-NPWPUMP-03	FILTERS AND UV FACILITY	11312D	
SHF-SLUDGEPUMP-01	SOLIDS HANDLING FACILITY	11312R	
SHF-SLUDGEPUMP-02	SOLIDS HANDLING FACILITY	11312R	
SHF-LSPUMP-01	SOLIDS HANDLING FACILITY	11312K	
SHF-LSPUMP-02	SOLIDS HANDLING FACILITY	11312K	
SHF-BLOWER-01	SOLIDS HANDLING FACILITY	11376A	
SHF-BLOWER-02	SOLIDS HANDLING FACILITY	11376A	
SHF-BLOWER-03	SOLIDS HANDLING FACILITY	11376A	
SHF-THICKENER-01	SOLIDS HANDLING FACILITY	11355A	EXISTING - RELOCATED FROM WALNUT CREEK WWTP TO WILD HORSE WWTP
SHF-POLYMERTANK-01	SOLIDS HANDLING FACILITY	11355A	
SHF-POLYMERTANK-02	SOLIDS HANDLING FACILITY	11355A	
OPS-BLOWER-01	OPERATIONS BUILDING	11375	
OPS-BLOWER-02	OPERATIONS BUILDING	11375	
OPS-BLOWER-03	OPERATIONS BUILDING	11375	

VALVE SCHEDULE

TAG ID	AREA DESIGNATION	SERVICE	TYPE	SIZE (IN.)	REMARKS
LS-PU1-CV-01	LIFT STATION	WW	CHECK	10	LIFT STATION PUMP NO. 1 CHECK VALVE
LS-PU2-CV-01	LIFT STATION	WW	CHECK	12	LIFT STATION PUMP NO. 2 CHECK VALVE
LS-PU3-CV-01	LIFT STATION	WW	CHECK	12	LIFT STATION PUMP NO. 3 CHECK VALVE
LS-PU4-CV-01	LIFT STATION	WW	CHECK	12	LIFT STATION PUMP NO. 4 CHECK VALVE
LS-PU5-CV-01	LIFT STATION	WW	CHECK	10	LIFT STATION PUMP NO. 5 CHECK VALVE
LS-PU1-PV-01	LIFT STATION	WW	PLUG	10	LIFT STATION PUMP NO. 1 PLUG VALVE
LS-PU2-PV-01	LIFT STATION	WW	PLUG	12	LIFT STATION PUMP NO. 2 PLUG VALVE
LS-PU3-PV-01	LIFT STATION	WW	PLUG	12	LIFT STATION PUMP NO. 3 PLUG VALVE
LS-PU4-PV-01	LIFT STATION	WW	PLUG	12	LIFT STATION PUMP NO. 4 PLUG VALVE
LS-PU5-PV-01	LIFT STATION	WW	PLUG	10	LIFT STATION PUMP NO. 5 PLUG VALVE
LS-BLWR1-BFV-01	LIFT STATION	AIR	BUTTERFLY	12	LIFT STATION ODOR CONTROL BUTTERFLY VALVE DAMPER VALVE
HW-GPU1-PV-01	HEADWORKS	WW	PLUG	4	HEADWORKS GRIT PUMP SUCTION PLUG VALVE
HW-GPU1-CV-01	HEADWORKS	WW	CHECK	4	HEADWORKS GRIT PUMP DISCHARGE CHECK VALVE
HW-GPU1-PV-01	HEADWORKS	WW	PLUG	4	HEADWORKS GRIT PUMP DISCHARGE PLUG VALVE
HW-FLB1-PV-01	HEADWORKS	WW	PLUG	12	HEADWORKS SPLITTER BOX DRAIN VALVE - DRAINS FLOWBOX THAT FEEDS AB NO. 1
HW-FLB1-PV-02	HEADWORKS	WW	PLUG	12	HEADWORKS SPLITTER BOX DRAIN VALVE - DRAINS FLOWBOX THAT FEEDS AB NO. 2
HW-FLB1-PV-03	HEADWORKS	WW	PLUG	12	HEADWORKS SPLITTER BOX DRAIN VALVE - DRAINS FLOWBOX THAT FEEDS AB NO. 3
HW-FLB1-PV-04	HEADWORKS	WW	PLUG	12	HEADWORKS SPLITTER BOX DRAIN VALVE - DRAINS FLOWBOX THAT FEEDS AB NO. 4
HW-BLWR1-BFV-01	HEADWORKS	AIR	BUTTERFLY	16	HEADWORKS ODOR CONTROL BUTTERFLY VALVE DAMPER VALVE
HW-BLWR1-BFV-02	HEADWORKS	AIR	BUTTERFLY	10	HEADWORKS ODOR CONTROL AIR BUTTERFLY VALVE
HW-BLWR1-BFV-03	HEADWORKS	AIR	BUTTERFLY	10	HEADWORKS ODOR CONTROL AIR BUTTERFLY VALVE
HW-BLWR1-BFV-04	HEADWORKS	AIR	BUTTERFLY	10	HEADWORKS ODOR CONTROL AIR BUTTERFLY VALVE
HW-BLWR1-BFV-05	HEADWORKS	AIR	BUTTERFLY	10	HEADWORKS ODOR CONTROL AIR BUTTERFLY VALVE
HW-BLWR1-BFV-06	HEADWORKS	AIR	BUTTERFLY	10	HEADWORKS ODOR CONTROL AIR BUTTERFLY VALVE
AB-RCPI1-PV-01	AERATION BASIN	WW	PLUG	10	AERATION BASIN NO. 1 MIXED LIQUOR RECYCLE TO ZONE 3 PLUG VALVE
AB-RCPI1-PV-02	AERATION BASIN	WW	PLUG	10	AERATION BASIN NO. 1 MIXED LIQUOR RECYCLE TO ZONE 4 PLUG VALVE
AB-RCPI2-PV-01	AERATION BASIN	WW	PLUG	10	AERATION BASIN NO. 2 MIXED LIQUOR RECYCLE TO ZONE 3 PLUG VALVE
AB-RCPI2-PV-02	AERATION BASIN	WW	PLUG	10	AERATION BASIN NO. 2 MIXED LIQUOR RECYCLE TO ZONE 4 PLUG VALVE
AB-RCPI3-PV-01	AERATION BASIN	WW	PLUG	10	AERATION BASIN NO. 3 MIXED LIQUOR RECYCLE TO ZONE 3 PLUG VALVE
AB-RCPI3-PV-02	AERATION BASIN	WW	PLUG	10	AERATION BASIN NO. 3 MIXED LIQUOR RECYCLE TO ZONE 4 PLUG VALVE
AB-RCPI4-PV-01	AERATION BASIN	WW	PLUG	10	AERATION BASIN NO. 4 MIXED LIQUOR RECYCLE TO ZONE 3 PLUG VALVE
AB-RCPI4-PV-02	AERATION BASIN	WW	PLUG	10	AERATION BASIN NO. 4 MIXED LIQUOR RECYCLE TO ZONE 4 PLUG VALVE
AB-RCPU1-CV-01	AERATION BASIN	WW	CHECK	10	AERATION BASIN RECYCLE PUMP NO. 1 CHECK VALVE
AB-RCPU2-CV-01	AERATION BASIN	WW	CHECK	10	AERATION BASIN RECYCLE PUMP NO. 2 CHECK VALVE
AB-RCPU3-CV-01	AERATION BASIN	WW	CHECK	10	AERATION BASIN RECYCLE PUMP NO. 3 CHECK VALVE
AB-RCPU4-CV-01	AERATION BASIN	WW	CHECK	10	AERATION BASIN RECYCLE PUMP NO. 4 CHECK VALVE
AB-RCPU5-CV-01	AERATION BASIN	WW	CHECK	10	AERATION BASIN RECYCLE PUMP NO. 5 CHECK VALVE
AB-RCPU6-CV-01	AERATION BASIN	WW	CHECK	10	AERATION BASIN RECYCLE PUMP NO. 6 CHECK VALVE
AB-RCPU7-CV-01	AERATION BASIN	WW	CHECK	10	AERATION BASIN RECYCLE PUMP NO. 7 CHECK VALVE
AB-RCPU8-CV-01	AERATION BASIN	WW	CHECK	10	AERATION BASIN RECYCLE PUMP NO. 8 CHECK VALVE
AB-AIPI1-BFV-01	AERATION BASIN	AIR	BUTTERFLY	4	AERATION BASIN COARSE BUBBLE BUTTERFLY VALVE - FEEDS AB NO. 1 & 2
AB-AIPI1-BFV-01	AERATION BASIN	AIR	BUTTERFLY	4	AERATION BASIN COARSE BUBBLE BUTTERFLY VALVE - FEEDS AB NO. 3 & 4
AB-AB1-BFV-01	AERATION BASIN	AIR	BUTTERFLY	12	AERATION BASIN FINE BUBBLE BUTTERFLY VALVE
AB-AB1-BFV-02	AERATION BASIN	AIR	BUTTERFLY	8	AERATION BASIN FINE BUBBLE BUTTERFLY VALVE
AB-AB1-BFV-03	AERATION BASIN	AIR	BUTTERFLY	6	AERATION BASIN FINE BUBBLE BUTTERFLY VALVE - ZONE 5 PIPE DROP
AB-AB1-BFV-04	AERATION BASIN	AIR	BUTTERFLY	6	AERATION BASIN FINE BUBBLE BUTTERFLY VALVE - ZONE 6 PIPE DROP
AB-AB2-BFV-01	AERATION BASIN	AIR	BUTTERFLY	12	AERATION BASIN FINE BUBBLE BUTTERFLY VALVE
AB-AB2-BFV-02	AERATION BASIN	AIR	BUTTERFLY	8	AERATION BASIN FINE BUBBLE BUTTERFLY VALVE
AB-AB2-BFV-03	AERATION BASIN	AIR	BUTTERFLY	6	AERATION BASIN FINE BUBBLE BUTTERFLY VALVE - ZONE 5 PIPE DROP
AB-AB2-BFV-04	AERATION BASIN	AIR	BUTTERFLY	6	AERATION BASIN FINE BUBBLE BUTTERFLY VALVE - ZONE 6 PIPE DROP
AB-AB3-BFV-01	AERATION BASIN	AIR	BUTTERFLY	12	AERATION BASIN FINE BUBBLE BUTTERFLY VALVE
AB-AB3-BFV-02	AERATION BASIN	AIR	BUTTERFLY	8	AERATION BASIN FINE BUBBLE BUTTERFLY VALVE
AB-AB3-BFV-03	AERATION BASIN	AIR	BUTTERFLY	6	AERATION BASIN FINE BUBBLE BUTTERFLY VALVE - ZONE 5 PIPE DROP
AB-AB3-BFV-04	AERATION BASIN	AIR	BUTTERFLY	6	AERATION BASIN FINE BUBBLE BUTTERFLY VALVE - ZONE 6 PIPE DROP
AB-AB4-BFV-01	AERATION BASIN	AIR	BUTTERFLY	12	AERATION BASIN FINE BUBBLE BUTTERFLY VALVE
AB-AB4-BFV-02	AERATION BASIN	AIR	BUTTERFLY	8	AERATION BASIN FINE BUBBLE BUTTERFLY VALVE
AB-AB4-BFV-03	AERATION BASIN	AIR	BUTTERFLY	6	AERATION BASIN FINE BUBBLE BUTTERFLY VALVE - ZONE 5 PIPE DROP
AB-AB4-BFV-04	AERATION BASIN	AIR	BUTTERFLY	6	AERATION BASIN FINE BUBBLE BUTTERFLY VALVE - ZONE 6 PIPE DROP
AB-WAPU1-PV-01	AERATION BASIN	WW	PLUG	4	WAS PUMP NO. 1 SUCTION PLUG VALVE
AB-WAPU1-PV-02	AERATION BASIN	WW	PLUG	4	WAS PUMP NO. 1 DISCHARGE PLUG VALVE
AB-WAPU1-CV-01	AERATION BASIN	WW	CHECK	4	WAS PUMP NO. 1 DISCHARGE CHECK VALVE
AB-WAPU2-PV-01	AERATION BASIN	WW	PLUG	4	WAS PUMP NO. 2 SUCTION PLUG VALVE
AB-WAPU2-PV-02	AERATION BASIN	WW	PLUG	4	WAS PUMP NO. 2 DISCHARGE PLUG VALVE
AB-WAPU2-CV-01	AERATION BASIN	WW	CHECK	4	WAS PUMP NO. 2 DISCHARGE CHECK VALVE
AB-WAPI1-PV-01	AERATION BASIN	WW	PLUG	4	WAS PIPING SUCTION PLUG VALVE
AB-WAPI1-PV-02	AERATION BASIN	WW	PLUG	4	WAS PIPING SUCTION PLUG VALVE
AB-GR1-PV-01	AERATION BASIN	WW	PLUG	4	MACERATOR UPSTREAM PIPING PLUG VALVE
AB-GR1-PV-02	AERATION BASIN	WW	PLUG	4	MACERATOR DOWNSTREAM PIPING PLUG VALVE
AB-GR1-PV-03	AERATION BASIN	WW	PLUG	4	MACERATOR DOWNSTREAM PIPING PLUG VALVE
SC-SCPU1-PV-01	SECONDARY CLARIFIER	WW	PLUG	4	SCUM PUMP NO. 1 DISCHARGE PLUG VALVE
SC-SCPU1-CV-01	SECONDARY CLARIFIER	WW	CHECK	4	SCUM PUMP NO. 1 DISCHARGE CHECK VALVE
SC-SCPU2-PV-01	SECONDARY CLARIFIER	WW	PLUG	4	SCUM PUMP NO. 2 DISCHARGE PLUG VALVE
SC-SCPU2-CV-01	SECONDARY CLARIFIER	WW	CHECK	4	SCUM PUMP NO. 2 DISCHARGE CHECK VALVE
SC-SCPU3-PV-01	SECONDARY CLARIFIER	WW	PLUG	4	SCUM PUMP NO. 3 DISCHARGE PLUG VALVE
SC-SCPU3-CV-01	SECONDARY CLARIFIER	WW	CHECK	4	SCUM PUMP NO. 3 DISCHARGE CHECK VALVE
SC-SCPU4-PV-01	SECONDARY CLARIFIER	WW	PLUG	4	SCUM PUMP NO. 4 DISCHARGE PLUG VALVE
SC-SCPU4-CV-01	SECONDARY CLARIFIER	WW	CHECK	4	SCUM PUMP NO. 4 DISCHARGE CHECK VALVE
SC-RAPU3-PV-01	SECONDARY CLARIFIER	WW	PLUG	6	RAS PUMP NO. 3 SUCTION PLUG VALVE
SC-RAPU3-PV-02	SECONDARY CLARIFIER	WW	PLUG	8	RAS PUMP NO. 3 DISCHARGE PLUG VALVE

THIS CONFORMED DOCUMENT IS RELEASED FOR THE CONVENIENCE OF THE CONTRACTOR UNDER THE AUTHORITY OF:

DANNY M HURTADO, P.E. — 11-01-22 DATE
TX LIC NO. 104266

SEE DISCLAIMER FOR LIMITATIONS OF USE.

CONTRACT DOCUMENTS DATED JUNE 10, 2022, AS PART OF THE BIDDING DOCUMENTS (DRAWINGS AND SPECIFICATIONS) AND SUBSEQUENTLY ISSUED ADDENDA HAVE BEEN MERGED INTO ONE CONFORMING SET OF DOCUMENTS FOR THE CONVENIENCE OF THE CONTRACTOR. IF INCONSISTENCIES OR AMBIGUITIES BETWEEN "CONFORMED" DOCUMENTS AND CONTRACT DOCUMENTS ARE FOUND, THE CONTRACT DOCUMENTS SHALL GOVERN.

REV	DATE	BY	DESCRIPTION
			CONFORMED DOCUMENTS

DESIGNED SM
DRAWN SDW
CHECKED JEA
DATE NOVEMBER 2022

** ORIGINAL SEALED BY DANNY M. HURTADO 06-10-22 TX PE 104266 **

carollo® TBPELS No. F-882

CITY OF AUSTIN — FOUNDED 1839

CITY OF AUSTIN

CITY OF AUSTIN
WILD HORSE RANCH WWTP EXPANSION
GENERAL
EQUIPMENT AND VALVE SCHEDULE - 1

VERIFY SCALES
BAR IS ONE INCH ON ORIGINAL DRAWING
0 1"
IF NOT ONE INCH ON THIS SHEET, ADJUST SCALES ACCORDINGLY

JOB NO. 10976A.00
DRAWING NO. 00G19
SHEET NO. 21 OF 464

PROJECT NO. 10976A10 FILE NAME: 10976A1000G19.dgn

VALVE SCHEDULE - CONT.					
SC-RAPU3-CV-01	SECONDARY CLARIFIER	WW	CHECK	8	RAS PUMP NO. 3 DISCHARGE CHECK VALVE
SC-RAPU4-PV-01	SECONDARY CLARIFIER	WW	PLUG	6	RAS PUMP NO. 4 SUCTION PLUG VALVE
SC-RAPU4-PV-02	SECONDARY CLARIFIER	WW	PLUG	8	RAS PUMP NO. 4 DISCHARGE PLUG VALVE
SC-RAPU4-CV-01	SECONDARY CLARIFIER	WW	CHECK	8	RAS PUMP NO. 4 DISCHARGE CHECK VALVE
SC-RAPU5-PV-01	SECONDARY CLARIFIER	WW	PLUG	6	RAS PUMP NO. 5 SUCTION PLUG VALVE
SC-RAPU5-PV-02	SECONDARY CLARIFIER	WW	PLUG	8	RAS PUMP NO. 5 DISCHARGE PLUG VALVE
SC-RAPU5-CV-01	SECONDARY CLARIFIER	WW	CHECK	8	RAS PUMP NO. 5 DISCHARGE CHECK VALVE
SC-RAPI3-PV-01	SECONDARY CLARIFIER	WW	PLUG	8	RAS PIPING SUCTION PLUG VALVE
SC-RAPI3-PV-02	SECONDARY CLARIFIER	WW	PLUG	8	RAS PIPING SUCTION PLUG VALVE
FLTR-F1-BFV-01	FILTER AND UV FACILITY	WW	BUTTERFLY	18	FILTER NO. 1 INFLUENT BUTTERFLY VALVE
FLTR-F1-BFV-02	FILTER AND UV FACILITY	WW	BUTTERFLY	18	FILTER NO. 1 EFFLUENT BUTTERFLY VALVE
FLTR-BWPU1-BFV-01	FILTER AND UV FACILITY	WW	BUTTERFLY	4	FILTER NO. 1 BACKWASH PUMP BUTTERFLY VALVE 1
FLTR-BWPU1-BFV-02	FILTER AND UV FACILITY	WW	BUTTERFLY	4	FILTER NO. 1 BACKWASH PUMP BUTTERFLY VALVE 2
FLTR-BWPU1-CV-01	FILTER AND UV FACILITY	WW	CHECK	4	FILTER NO. 1 BACKWASH PUMP CHECK VALVE
FLTR-F2-BFV-01	FILTER AND UV FACILITY	WW	BUTTERFLY	18	FILTER NO. 2 INFLUENT BUTTERFLY VALVE
FLTR-F2-BFV-02	FILTER AND UV FACILITY	WW	BUTTERFLY	18	FILTER NO. 2 EFFLUENT BUTTERFLY VALVE
FLTR-BWPU2-BFV-01	FILTER AND UV FACILITY	WW	BUTTERFLY	4	FILTER NO. 2 BACKWASH PUMP BUTTERFLY VALVE 1
FLTR-BWPU2-BFV-02	FILTER AND UV FACILITY	WW	BUTTERFLY	4	FILTER NO. 2 BACKWASH PUMP BUTTERFLY VALVE 2
FLTR-BWPU2-CV-01	FILTER AND UV FACILITY	WW	CHECK	4	FILTER NO. 2 BACKWASH PUMP CHECK VALVE
FLTR-UV-PV-01	FILTER AND UV FACILITY	WW	PLUG	4	UV CHANNEL DRAIN PLUG VALVE
FLTR-NWPU1-CV-01	FILTER AND UV FACILITY	WW	CHECK	6	PLANT WATER PUMP NO. 1 CHECK VALVE
FLTR-NWPU1-GV-01	FILTER AND UV FACILITY	WW	GATE	6	PLANT WATER PUMP NO. 1 ISOLATION GATE VALVE
FLTR-NWPU2-CV-01	FILTER AND UV FACILITY	WW	CHECK	6	PLANT WATER PUMP NO. 2 CHECK VALVE
FLTR-NWPU2-GV-01	FILTER AND UV FACILITY	WW	GATE	6	PLANT WATER PUMP NO. 2 ISOLATION GATE VALVE
FLTR-NWPU3-CV-01	FILTER AND UV FACILITY	WW	CHECK	6	PLANT WATER PUMP NO. 3 CHECK VALVE
FLTR-NWPU3-GV-01	FILTER AND UV FACILITY	WW	GATE	6	PLANT WATER PUMP NO. 3 ISOLATION GATE VALVE
FLTR-NPWI2-PRLV-0	FILTER AND UV FACILITY	WW	PRV	4	PLANT WATER RECIRCULATION PRESSURE SUSTAINING/RELIEF VALVE
FLTR-NPWP-PV-01	FILTER AND UV FACILITY	WW	PLUG	10	PLANT WATER PUMP STATION INFLUENT PLUG VALVE
SHF-SLPU1-PV-01	SOLIDS HANDLING FACILIT	WW	PLUG	6	THICKENER FEED PUMP NO. 1 SUCTION ISOLATION PLUG VALVE
SHF-SLPU1-PV-02	SOLIDS HANDLING FACILIT	WW	PLUG	6	THICKENER FEED PUMP NO. 1 DISCHARGE ISOLATION PLUG VALVE
SHF-SLPU1-PV-03	SOLIDS HANDLING FACILIT	WW	PLUG	6	THICKENER FEED PUMP NO. 1 BYPASS ISOLATION PLUG VALVE
SHF-SLPU1-CV-01	SOLIDS HANDLING FACILIT	WW	CHECK	6	THICKENER FEED PUMP NO. 1 CHECK VALVE
SHF-SLPI1-PV-01	SOLIDS HANDLING FACILIT	WW	PLUG	4	SLUDGE TRUCK LOADING PLUG VALVE
Y-SLPI1-PV-01	YARD	WW	PLUG	8	SLUDGE HANDLING TANK NO. 1 DRAIN VALVE
Y-WAPI1-PV-01	YARD	WW	PLUG	4	SOLIDS HANDLING TANK NO. 1 WAS ISOLATION PLUG VALVE
Y-WAPI1-PV-02	YARD	WW	PLUG	6	SOLIDS HANDLING TANK NO. 2 WAS ISOLATION PLUG VALVE
Y-SCPI1-PV-01	YARD	WW	PLUG	6	SOLIDS HANDLING TANK NO. 1 SCUM ISOLATION PLUG VALVE
Y-SCPI1-PV-02	YARD	WW	PLUG	6	SOLIDS HANDLING TANK NO. 2 SCUM ISOLATION PLUG VALVE
SHF-LSPU1-PV-01	SOLIDS HANDLING FACILIT	WW	PLUG	6	PLANT DRAIN PUMP NO. 1 ISOLATION PLUG VALVE
SHF-LSPU1-CV-01	SOLIDS HANDLING FACILIT	WW	CHECK	6	PLANT DRAIN PUMP NO. 1 CHECK VALVE
SHF-LSPU2-PV-01	SOLIDS HANDLING FACILIT	WW	PLUG	6	PLANT DRAIN PUMP NO. 2 ISOLATION PLUG VALVE
SHF-LSPU2-CV-01	SOLIDS HANDLING FACILIT	WW	CHECK	6	PLANT DRAIN PUMP NO. 2 CHECK VALVE
SHF-YAPI1-PV-01	SOLIDS HANDLING FACILIT	WW	PLUG	6	PLANT DRAIN PUMP STATION FLUSHING PLUG VALVE
SHF-YAPI1-PV-02	SOLIDS HANDLING FACILIT	WW	PLUG	6	PLANT DRAIN PUMP STATION ISOLATION PLUG VALVE
SHF-BLWR1-BFV-01	SOLIDS HANDLING FACILIT	WW	BUTTERFLY	4	SLUDGE HOLDING FACILITY BLOWER NO. 1 ISOLATION BUTTERFLY VALVE
SHF-BLWR1-CV-01	SOLIDS HANDLING FACILIT	WW	CHECK	4	SLUDGE HOLDING FACILITY BLOWER NO. 1 FLAPPER CHECK VALVE
SHF-BLWR2-BFV-01	SOLIDS HANDLING FACILIT	WW	BUTTERFLY	4	SLUDGE HOLDING FACILITY BLOWER NO. 2 ISOLATION BUTTERFLY VALVE
SHF-BLWR2-CV-01	SOLIDS HANDLING FACILIT	WW	CHECK	4	SLUDGE HOLDING FACILITY BLOWER NO. 2 FLAPPER CHECK VALVE
SHF-BLWR3-BFV-01	SOLIDS HANDLING FACILIT	WW	BUTTERFLY	4	SLUDGE HOLDING FACILITY BLOWER NO. 3 ISOLATION BUTTERFLY VALVE
SHF-BLWR3-CV-01	SOLIDS HANDLING FACILIT	WW	CHECK	4	SLUDGE HOLDING FACILITY BLOWER NO. 3 FLAPPER CHECK VALVE
Y-AIPI1-BFV-01	YARD	WW	BUTTERFLY	6	SLUDGE HOLDING TANK AIR HEADER ISOLATION BUTTERFLY VALVE NO. 1
Y-AIPI1-BFV-02	YARD	WW	BUTTERFLY	4	SLUDGE HOLDING TANK AIR HEADER ISOLATION BUTTERFLY VALVE NO. 2
Y-THPI1-PV-01	YARD	WW	PLUG	4	THICKENED WAS DISCHARGE ISOLATION PLUG VALVE
SHF-WAPI2-PV-01	SOLIDS HANDLING FACILIT	WW	PLUG	4	THICKENER FEED ISOLATION PLUG VALVE
SHF-YAPI2-PV-01	SOLIDS HANDLING FACILIT	WW	PLUG	12	THICKENER CENTRATE DISCHARGE ISOLATION PLUG VALVE
DIG-THPI1-PV-01	DIGESTER	WW	PLUG	4	SLUDGE HOLDING TANK NO. 2 TANK OFFLOADING PLUG VALVE 1
DIG-THPI1-PV-02	DIGESTER	WW	PLUG	4	SLUDGE HOLDING TANK NO. 2 TANK OFFLOADING PLUG VALVE 2
OPS-BLWR1-BFV-01	OPERATIONS BUILDING	WW	BUTTERFLY	12	BLOWER NO. 1 DISCHARGE BUTTERFLY VALVE
OPS-BLWR1-CV-01	OPERATIONS BUILDING	WW	CHECK	12	BLOWER NO. 1 DISCHARGE CHECK VALVE
OPS-BLWR2-BFV-01	OPERATIONS BUILDING	WW	BUTTERFLY	12	BLOWER NO. 2 DISCHARGE BUTTERFLY VALVE
OPS-BLWR2-CV-01	OPERATIONS BUILDING	WW	CHECK	12	BLOWER NO. 2 DISCHARGE CHECK VALVE
OPS-BLWR3-BFV-01	OPERATIONS BUILDING	WW	BUTTERFLY	12	BLOWER NO. 3 DISCHARGE BUTTERFLY VALVE
OPS-BLWR3CV-01	OPERATIONS BUILDING	WW	CHECK	12	BLOWER NO. 3 DISCHARGE CHECK VALVE

ABBREVIATIONS: N/A = NOT APPLICABLE; H = HANDWHEEL; L = LEVER; EM = ELECTRIC MOTOR; C= HANDCRANK W/ 2" SQUARE NUT;
N = 2" SQUARE NUT, BURIED; EB=MANUAL GEAR BOX WITH EXTENSION BONNET, BURIED

THIS CONFORMED DOCUMENT IS RELEASED FOR THE CONVENIENCE OF THE CONTRACTOR UNDER THE AUTHORITY OF:

DANNY M HURTADO, P.E.
TX LIC NO. 104266

11-01-22
DATE

SEE DISCLAIMER FOR LIMITATIONS OF USE.

CONTRACT DOCUMENTS DATED JUNE 10, 2022, AS PART OF THE BIDDING DOCUMENTS (DRAWINGS AND SPECIFICATIONS) AND SUBSEQUENTLY ISSUED ADDENDA HAVE BEEN MERGED INTO ONE CONFORMING SET OF DOCUMENTS FOR THE CONVENIENCE OF THE CONTRACTOR. IF INCONSISTENCIES OR AMBIGUITIES BETWEEN "CONFORMED" DOCUMENTS AND CONTRACT DOCUMENTS ARE FOUND, THE CONTRACT DOCUMENTS SHALL GOVERN.

REV	DATE	BY	DESCRIPTION
			CONFORMED DOCUMENTS

DESIGNED SM
DRAWN SDW
CHECKED JEA
DATE NOVEMBER 2022

** ORIGINAL SEALED BY DANNY M. HURTADO 06-10-22 TX PE 104266 **

carollo®
TBPELS No. F-882

CITY OF AUSTIN
FOUNDED 1839
CITY OF AUSTIN

CITY OF AUSTIN
WILD HORSE RANCH WWTP EXPANSION
GENERAL
EQUIPMENT AND VALVE SCHEDULE - 2

VERIFY SCALES
BAR IS ONE INCH ON ORIGINAL DRAWING
0 1"
IF NOT ONE INCH ON THIS SHEET, ADJUST SCALES ACCORDINGLY

JOB NO. 10976A.00
DRAWING NO. 00G20
SHEET NO. 22 OF 464

PROJECT NO. 10976A10 FILE NAME: 10976A1000G20.dgn

Plot Date: 10-OCT-2022 8:09:21 AM
User: LDietzel
PlotScale: 1:1
DesignScript: Carollo_Std_Pen_v0905.pen
ColorTable: gshade.ctb
Model: Layout1
LAST SAVED BY: ldietzel

PIPING SCHEDULE

Process Abbreviation	Service	Nominal Diameter (inches)	Material	Pressure Class Special Thickness Class Schedule Wall Thickness	Pipe Spec Section	Joints/Fittings	Test Pressure/ Method	Lining	Coating	Comments
AIR	**AERATION AIR**									
	Underground	---	DIP	150	510 - Ductile Iron Pipe: AWWA C151	GE, See Note 1	15 psig/AM	None	Bituminous	See Note 1
	Aboveground	---	Type 304L SST	SCH 10S	15286 - Stainless Steep Pipe	WLD or FL, FL where shown 1	15 psig/AM	None	EPP	
ALM	**ALUM**									
	Underground (Inner Piping)	---	PVC	SCH 80	15293 - Double Containment Piping & ASTM D 1785	SW	125 psig /HH	None	None	
	Underground (Containment Piping)	---	PVC	SCH 80	15293 - Double Containment Piping & ASTM D 1785	SW	125 psig /HH	None	None	See Note 2
	Aboveground (Containment Piping)	---	CPVC	SCH 80	15259 - CPVC Pipe: ASTM F441 & 15293 - Double Containment Piping	SW	125 psig /HH	None	EPP	See Note 2
DR	**DRAIN** 1									
	Underground	<4	PVC	SCH 80	ASTM D 1785 & ASTM D 2467	SW	50 psig /HH	None	None	See Note 3
	Underground (All Except Admin Building)	≥4	PVC	DR 25	15244 - PVC Pipe: AWWA C900	B&SP	50 psig /HH	None	None	See Note 3
	Underground (Administration Building)	---	CISP	-	15400 - Plumbing Systems & ASTM A 74	B&SP	50 psig /HH	None	None	See Note 3 & 4
	Aboveground	<4	CPVC	SCH 80	15259 - CPVC Pipe: ASTM F441	SW	50 psig /HH	None	EPP	See Note 2
	Aboveground	≥4	DIP	150	510 - Ductile Iron Pipe: AWWA C151	FL	50 psig /HH	CM	EPP	
FA	**FOUL AIR**	---	FRP	See FRP Spec	15814 - Fiberglass Reinforced Plastic Ducts	See FRP Spec	See FRP Spec	See FRP Spec	See FRP Spec	
FE	**FILTER EFFLUENT**									
	Aboveground	---	DIP	150	510 - Ductile Iron Pipe: AWWA C151	FL	20 feet/LH 1	CM	EPP	
FIL	**THICKENER FILTRATE**									
	Underground	---	DIP	150	510 - Ductile Iron Pipe: AWWA C151	Mech Rest. MJ	50 psig/HH	P401	2 layers PEE	Upstream of PVC Drain
	Aboveground	---	DIP	150	510 - Ductile Iron Pipe: AWWA C151	FL	50 psig/HH	P401	EPP	
GR	**GRIT SLURRY**									
	Underground	---	DIP	150	510 - Ductile Iron Pipe: AWWA C151	Mech Rest. MJ	50 psig/HH	GL	2 layers of PEE	
	1 Aboveground	---	DIP	150	510 - Ductile Iron Pipe: AWWA C151	FL	50 psig/HH	GL	EPP	
ML / MLR	**MIXED LIQUOR / MLR**									
	Underground	---	DIP	150	510 - Ductile Iron Pipe: AWWA C151	Mech Rest. MJ	50 psig/HH	CM	2 layers of PEE	
	Aboveground	---	DIP	150	510 - Ductile Iron Pipe: AWWA C151	FL	50 psig/HH	CM	EPP	
NPW	**NON-POTABLE WATER** 1									
	Underground	<4	PVC	SCH 80	ASTM D 1785 & ASTM D 2467	SW	125 psig /HH	None	None	
	Underground	≥4	DIP	150	510 - Ductile Iron Pipe: AWWA C151	Mech Rest. MJ	125 psig/HH	CM	2 layers PEE	
	Aboveground	<4	GSP	SCH 40	15278 - Steel Pipe: Exposed	THR	125 psig /HH	None	EPP	
	Aboveground	≥4	DIP	150	510 - Ductile Iron Pipe: AWWA C151	FL	125 psig/HH	CM	EPP	
OF	**OVERFLOW**									
	Underground	---	DIP	150	510 - Ductile Iron Pipe: AWWA C151	Mech Rest. MJ	125 psig/HH	P401	2 layers PEE	
	Aboveground	---	DIP	150	510 - Ductile Iron Pipe: AWWA C151	FL	15 feet/GR	P401	EPP	
PD	**PUMPED DRAINAGE**									
	Aboveground	<4	GSP	SCH 40	15278 - Steel Pipe: Exposed	THR	50 psig/HH	None	PTW	
	Aboveground	≥4	DIP	150	510 - Ductile Iron Pipe: AWWA C151	FL	50 psig/HH	CM	2 layers PEE	
	Underground	<4	PVC	SCH 80	ASTM D 1785 & ASTM D 2467	SW	50 psig/HH	None	None	
	Underground	≥4	DIP	150	510 - Ductile Iron Pipe: AWWA C151	Mech Rest. MJ	50 psig/HH	CM	2 layers PEE	
PE	**PLANT EFFLUENT**	---	DIP	150	510 - Ductile Iron Pipe: AWWA C151	Mech Rest. MJ	50 psig/HH	CM	2 layers of PEE	
PLY	**POLYMER**									
	Aboveground	---	CPVC	SCH 80	15259 - CPVC Pipe: ASTM F441	SW	125 psig /HH	None	EPP	
PW	**POTABLE WATER**									
	Underground	<4	PVC	SCH 80	ASTM D 1785 & ASTM D 2467	SW	125 psig/HH	None	None	See Note 2
	Underground	≥4	DIP	150	510 - Ductile Iron Pipe: AWWA C151	Mech Rest. MJ	125 psig/HH	CM	2 layers PEE	
	1 Aboveground	---	CPVC	SCH 80	15259 - CPVC Pipe: ASTM F441	SW	125 psig /HH	None	EPP	See Note 2
	Underground (Admin & Ops Bldg)	---	COPR	ASTM B88 Type K	15400 2.06 - Plumbing Systems	SOL	100psig/HH	None	None	See Note 4
	Aboveground (Admin & Ops Bldg)	---	COPR	ASTM B88 Type L	15400 2.06 - Plumbing Systems	SOL	100psig/HH	None	None	See Note 4
RAS	**RETURN ACTIVATED SLUDGE**									
	Underground	---	DIP	250	510 - Ductile Iron Pipe: AWWA C151	Mech Rest. MJ	100 psig/HH	P401	2 layers PEE	
	Aboveground	---	DIP	250	510 - Ductile Iron Pipe: AWWA C151	FL	100 psig/HH	P401	EPP	
RI	**RAW INFLUENT**	---	DIP	150	510 - Ductile Iron Pipe: AWWA C151	Mech Rest. MJ	50 psig/HH	P401	2 layers of PEE	
SE	**SECONDARY EFFLUENT**	---	DIP	150	510 - Ductile Iron Pipe: AWWA C151	Mech Rest. MJ	30 psig/HH	CM	2 layers PEE	
SI	**SCREENED INFLUENT**									
	Underground	---	DIP	150	510 - Ductile Iron Pipe: AWWA C151	Mech Rest. MJ	50 psig/HH	P401	2 layers of PEE	
	Aboveground	---	DIP	150	510 - Ductile Iron Pipe: AWWA C151	FL	100 psig/HH	P401	EPP	
2 SC / SSC	**SCUM / SECONDAY SCUM**							2		
	Underground	---	DIP	150	510 - Ductile Iron Pipe: AWWA C151	Mech Rest. MJ	100 psig/HH	P401	2 layers PEE	
	Aboveground	---	DIP	150	510 - Ductile Iron Pipe: AWWA C151	FL	100 psig/HH	P401	EPP	
TWAS	**THICKENED WASTE ACTIVATED SLUDGE**									
	Underground	---	DIP	150	510 - Ductile Iron Pipe: AWWA C151	Mech Rest. MJ	100 psig/HH	P401	2 layers PEE	
	Aboveground	---	DIP	150	510 - Ductile Iron Pipe: AWWA C151	FL	100 psig/HH	P401	EPP	
WAS	**WASTE ACTIVATED SLUDGE**									
	Underground	---	DIP	150	510 - Ductile Iron Pipe: AWWA C151	Mech Rest. MJ	100 psig/HH	P401	2 layers PEE	
	Aboveground	---	DIP	150	510 - Ductile Iron Pipe: AWWA C151	FL	100 psig/HH	P401	EPP	

1. ABBREVIATIONS USED IN THE COLUMN, "TEST METHOD", REFER TO THE RESPECTIVE METHODS AS SPECIFIED IN SECTION 15956 - PIPING SYSTEMS TESTING.

AM	AIR METHOD
GR	GRAVITY METHOD
HH	HIGH HEAD METHOD
LH	LOW HEAD METHOD

2. ABBREVIATIONS TO DESIGNATE PIPING INCLUDE THE FOLLOWING:

B&SP	BELL AND SPIGOT
CI	CAST IRON
CISP	CAST IRON SOIL PIPE
CL	CLASS, FOLLOWED BY THE DESIGNATION
CM	CEMENT MORTAR
COPR	COPPER PIPE
CPVC	CHLORINATED POLYVINYL CHLORIDE
CTP	COAL TAR PITCH
DIP	DUCTILE IRON PIPE
EPP	EPOXY POLYURETHANE COATING
FL	FLANGE
FRP	FIBERGLASS REINFORCED PLASTIC
GA	GAUGE, PRECEDED BY THE DESIGNATION
GE	GROOVED-END JOINT

2. ABBREVIATIONS TO DESIGNATE PIPING INCLUDE THE FOLLOWING (CONTINUED):

GL	GLASS LINED
GSP	GALVANIZED STEEL PIPE
HDPE	HIGH DENSITY POLY ETHYLENE
MJ	MECHANICAL JOINT
NPS	NOMINAL PIPE SIZE, FOLLOWED BY THE NUMBER OF INCHES
P401	PROTECTO 401TM CERAMIC EPOXY LINING
psi	POUNDS PER SQUARE INCH
psig	POUNDS PER SQUARE INCH GAUGE
PE	POLYETHYLENE
PEE	POLYETHYLENE ENCASEMENT
PTW	POLYETHYLENE TAPE WRAP
PVC	POLYVINYL CHLORIDE
SCH	SCHEDULE, FOLLOWED BY THE DESIGNATION
SOL	SOLDER TYPE FORGED
SST	STAINLESS STEEL
SW	SOLVENT WELDED
THR	THREADED
VCP	VITRIFIED CLAY PIPING
WLD	WELDED

GENERAL NOTES:

1. UNDERGROUND LPA SYSTEM PIPING TO BE GROOVED-JOINTED WITH PRODUCTS BY VICTAULIC (STYLE 31) OR EQUAL WITH PIPE THICKNESS AS REQUIRED. JOINTS TO BE FLEXIBLE RADIUS TYPE ALLOWING UP TO 0.47 INCHES OF EXPANSION WITH DUCTILE HOUSINGS, BITUMINOUS COATING, AND STAINLESS STEEL BOLTS. FITTINGS TO BE GROOVED-END OR FLANGED. PROVIDE HIGH-TEMPERATURE GASKETS FOR DRY-AIR SERVICE UP TOP 250 DEG-F.
2. USE FLANGED FITTING BETWEEN PVC AND CPVC CONNECTION.
3. REFER TO DRAWINGS FOR LOCATIONS WHERE CONCRETE ENCASEMENT IS REQUIRED.
4. USED IN ADMINISTRATION AND OPERATIONS BUILDING.

.

THIS CONFORMED DOCUMENT IS RELEASED FOR THE CONVENIENCE OF THE CONTRACTOR UNDER THE AUTHORITY OF:

DANNY M HURTADO, P.E. — 11-01-22 DATE
TX LIC NO. 104266

SEE DISCLAIMER FOR LIMITATIONS OF USE.

CONTRACT DOCUMENTS DATED JUNE 10, 2022, AS PART OF THE BIDDING DOCUMENTS (DRAWINGS AND SPECIFICATIONS) AND SUBSEQUENTLY ISSUED ADDENDA HAVE BEEN MERGED INTO ONE CONFORMING SET OF DOCUMENTS FOR THE CONVENIENCE OF THE CONTRACTOR. IF INCONSISTENCIES OR AMBIGUITIES BETWEEN "CONFORMED" DOCUMENTS AND CONTRACT DOCUMENTS ARE FOUND, THE CONTRACT DOCUMENTS SHALL GOVERN.

REV	DATE	BY	DESCRIPTION
2	09-06-22	DMH	ADDENDUM NO. 4
1	08-29-22	DMH	ADDENDUM NO. 3

CONFORMED DOCUMENTS

DESIGNED SM
DRAWN SDW
CHECKED JEA
DATE NOVEMBER 2022

** ORIGINAL SEALED BY DANNY M. HURTADO 06-10-22 TX PE 104266 **

carollo® TBPELS No. F-882

CITY OF AUSTIN FOUNDED 1839

CITY OF AUSTIN

CITY OF AUSTIN
WILD HORSE RANCH WWTP EXPANSION
GENERAL
PIPING SCHEDULE

VERIFY SCALES
BAR IS ONE INCH ON ORIGINAL DRAWING
0 1"
IF NOT ONE INCH ON THIS SHEET, ADJUST SCALES ACCORDINGLY

JOB NO. 10976A.00
DRAWING NO. 00G21
SHEET NO. 23 OF 464

PROJECT NO. 10976A10 FILE NAME: 10976A1000G21.dgn

Plot Date: 10-OCT-2022 7:05:27 AM
User: LDietzel
PlotScale: 1:1
DesignScript: Carollo_Std_Pen_v0905.pen
ColorTable: gshade.ctb
Model: Layout1
LAST SAVED BY: ldietzel

RIGHT OF WAY MANAGEMENT STANDARD NOTES

1. CONTRACTOR SHALL HAVE AN APPROVED RIGHT OF WAY (ROW) PERMIT AND TRAFFIC CONTROL PLAN (TCP) IN ELECTRONIC OR PAPER FORMATS ON SITE AT ALL TIMES WHEN WORKING IN THE ROW.
2. CONTRACTOR SHALL PROVIDE NOTIFICATION, AS PER THE LATEST MOBILITY GUIDELINES (MG-04).
3. UNLESS OTHERWISE APPROVED BY THE ROW DIVISION OF AUSTIN TRANSPORTATION DEPARTMENT (ATD): A.) ONLY ONE PHASE OF A TCP MAY BE SET AT ANY ONE TIME, AND B.) INITIAL SETUP AND PHASE CHANGES OF LONG-TERM WORK ZONES SHALL BE INSTALLED ON WEEKENDS.
4. ONCE TRAFFIC CONTROL HAS BEEN SET, THE AUTHORIZED AND COMPETENT REPRESENTATIVE FROM THE PROJECT TEAM/BARRICADE COMPANY WILL COMPLETE AND UPLOAD THE "CONTRACTOR'S SELF-INSPECTION CHECKLIST" FORM. SEE FORM AND DETAILED INSTRUCTIONS HERE: HTTPS://WWW.AUSTINTEXAS.GOV/PAGE/RIGHT-WAY-TRAFFIC-CONTROL
5. FOR ROW VIOLATIONS, AN INVESTIGATION FEE WILL BE ASSESSED FOR EACH OFFENSE UNTIL THE VIOLATION IS CORRECTED. SEE CURRENT FEE SCHEDULE HERE: HTTPS://WWW.AUSTINTEXAS.GOV/SITES/DEFAULT/FILES/FILES/TRANSPORTATION/RIGHT_OF_WAY/APPROVED_ROW_FEES.PDF
6. EXCAVATIONS SHALL BE BACKFILLED OR PLATED WHEN REQUIRED TO OPEN TO TRAFFIC. TEMPORARY PAVING SHALL BE DONE ACCORDING TO CITY OF AUSTIN (COA) STANDARD DETAIL 1100S-4 (FOR HMAC OR PCC PAVEMENTS). FOR EXCAVATIONS EXCEEDING A TRANSVERSE WIDTH OF 5 FEET, THE CONTRACTOR SHALL PROVIDE AN ENGINEERED PLATING PLAN FOR REVIEW BY THE CITY.
7. PEDESTRIAN ROUTES IN AND AROUND THE WORK ZONE, INCLUDING CONSTRUCTION ENTRANCES, TEMPORARY WALKING PATHS, BYPASSES, COVERED WALKWAYS, AND DETOURS THROUGHOUT THE PROJECT, MUST REMAIN ACCESSIBLE AND SHALL INCLUDE ACCESSIBILITY FEATURES CONSISTENT WITH THE FEATURES PRESENT IN THE EXISTING PEDESTRIAN FACILITY.
8. ALL APPLICABLE SAFEGUARDS SHALL BE IN PLACE PER CHAPTER 33 OF THE INTERNATIONAL BUILDING CODE, TO INCLUDE PEDESTRIAN PROTECTIONS PER SECTION 3306.
9. "CONSTRUCTION ENTRANCE AHEAD" SIGNS MUST BE PLACED AT ALL APPROACHES TO CONSTRUCTION ENTRANCES, UNLESS OTHERWISE SHOWN ON THE APPROVED TCP.
10. EXISTING DRIVEWAYS SHALL NOT BE CLOSED EXCEPT WITH ADVANCE NOTICE TO THE AFFECTED BUSINESSES/RESIDENCES AND APPROVAL FROM THE ROW DIVISION OF ATD.
11. ALL TRAFFIC CONTROL DEVICES INCLUDING PROTECTIVE BARRIERS MUST BE CRASHWORTHY AND INSTALLED ACCORDING TO THE MANUFACTURER'S GUIDELINES. CRASHWORTHINESS SHALL BE DETERMINED PER MASH TESTING REQUIREMENTS.
12. OVERNIGHT PROTECTION OF WORK ZONES AND STORAGE OF MATERIAL/EQUIPMENT SHALL BE ACCORDING TO COA STANDARD DETAIL 804S-4.
13. THE NAME OF THE BARRICADE CONTRACTOR SHALL BE SHOWN ON THE NON-REFLECTIVE SURFACE OF ALL TRAFFIC CONTROL DEVICES IN ACCORDANCE WITH COA STANDARD DETAIL 804S-5.
14. THE CITY'S TRAFFIC ENGINEER OR INSPECTOR MAY MAKE OR REQUIRE FIELD ADJUSTMENTS TO ADDRESS ISSUES OF SAFETY AND MOBILITY.
15. IF EXISTING CAPITAL METRO BUS STOPS ARE WITHIN THE TEMPORARY TRAFFIC CONTROL OR DETOUR AREA, THE CONTRACTOR SHALL CONTACT CAPITAL METRO (LAURIE MICHEL AT 512-621-5713 (MOBILE)/ 512-369-7701 (WORK), LAURIE.MICHEL@CAPMETRO.ORG), OR ~SERVICE.IMPACTS@CAPMETRO.ORG, TWO (2) WEEKS PRIOR TO SETTING UP THE TRAFFIC CONTROL DEVICES IN ORDER TO COORDINATE POTENTIAL BUS-STOP RELOCATION OR ANY OTHER RELATED ISSUES.
16. IF EXISTING SIGNALIZED INTERSECTIONS ARE WITHIN THE TEMPORARY TRAFFIC CONTROL AREA, THE CONTRACTOR SHALL CONTACT ATD – SIGNALS DIVISION AT (512) 974-4075, ONE WEEK PRIOR TO SETTING TRAFFIC CONTROL DEVICES.
17. THE RIGHT OF WAY SHALL BE RETURNED TO FULL USE AT THE END OF THE APPROVED WORK HOURS.
18. CONTRACTORS SHALL ADHERE TO ALL ROW SPECIAL EVENT ACTIVITY RESTRICTIONS, AS PER THE LATEST MOBILITY GUIDELINES (MG-08). PROJECTS THAT ARE ROUTED THROUGH THE DAPCZ PROCESS ARE REQUIRED TO COORDINATE WITH THE OFFICE OF SPECIAL EVENTS (512-974-1000 OR TRANSPORTATIONSPECIALEVENTS@AUSTINTEXAS.GOV), IN CONJUNCTION WITH THE ROW DIVISION OF ATD. VISIT CITY STAGE FOR SCHEDULED EVENTS FOR ALL OF AUSTIN.
19. PURSUANT TO CITY CODE 9-2-3, ROW WORK MUST NOT MAKE NOISE AUDIBLE TO AN ADJACENT BUSINESS OR RESIDENCE BETWEEN 10:30PM AND 7:00AM OR OPERATE A MACHINE THAT SEPARATES, GATHERS, GRADES, LOADS, OR UNLOADS SAND, ROCK, OR GRAVEL WITHIN 600 FEET OF A RESIDENCE, CHURCH, HOSPITAL, HOTEL, OR MOTEL BETWEEN 7:00PM AND 6:00AM, EXCEPT FOR INSTALLATION OF CONCRETE AUTHORIZED BY A SEPARATE NON-PEAK HOUR CONCRETE POUR PERMIT ISSUED UNDER CITY CODE SECTION 9-2-21.

THIS CONFORMED DOCUMENT IS RELEASED FOR THE CONVENIENCE OF THE CONTRACTOR UNDER THE AUTHORITY OF:

LINDA L. BARLOW, PE — 11-01-2022
TX LIC NO. 63878 — DATE

SEE DISCLAIMER FOR LIMITATIONS OF USE.

CONTRACT DOCUMENTS DATED FEBRUARY 24,2022, AS PART OF THE BIDDING DOCUMENTS (DRAWINGS AND SPECIFICATIONS) AND SUBSEQUENTLY ISSUED ADDENDA HAVE BEEN MERGED INTO ONE CONFORMING SET OF DOCUMENTS FOR THE CONVENIENCE OF THE CONTRACTOR. IF INCONSISTENCIES OR AMBIGUITIES BETWEEN "CONFORMED" DOCUMENTS AND CONTRACT DOCUMENTS ARE FOUND, TEH CONTRACT DOCUMENTS SHALL GOVERN.

STREET	CLASS	SPEED LIMIT	PROTECTION STATUS	FROM	TO	PLANNED IMPROVEMENTS	TCP SHEET	TCP TYPE	CATEGORY	ALLOWED BARRICADING HOURS	DURATION
BLUE BLUFF RD	LOCAL	25	N/A	WILD HORSE RANCH TRL	WILD HORSE RANCH WWTP ENTRANCE	CONSTRUCTION ENTRANCE	3	ADVANCE SIGNING FOR CONSTRUCTION	LONG TERM STATIONARY	24 HOURS	36 MONTHS

REV	DATE	BY	DESCRIPTION
			CONFORMED DOCUMENTS

DESIGNED LJB
DRAWN EJB
CHECKED RCJ
DATE NOVEMBER 2022

ORIGINAL SEALED BY LINDA L. BARLOW 2-24-2022 TXPE 63878

HVJ ASSOCIATES
1701 DIRECTORS BLVD
SUITE 910
AUSTIN, TX 78744
737-222-5151
TEXAS FIRM NO. F-000646

carollo® TBPE No. F-882

CITY OF AUSTIN — FOUNDED 1839

CITY OF AUSTIN
WILD HORSE RANCH WWTP EXPANSION
GENERAL
RIGHT OF WAY MANAGEMENT STANDARD NOTES

VERIFY SCALES
BAR IS ONE INCH ON ORIGINAL DRAWING
0 — 1"
IF NOT ONE INCH ON THIS SHEET, ADJUST SCALES ACCORDINGLY

JOB NO. 10976A.10
DRAWING NO. 00G22
SHEET NO. 24 OF 464

TRUE NORTH

SCALE 1" = 50'

LEGEND

- PROP. TRAFFIC FLOW
- SIGN POST
- WORK AREA
- FLAGGER
- TYPE I BARRICADE
- TYPE III BARRICADE
- CHANNELIZING DEVICES
- ARROWBOARD
- MESSAGEBOARD (MB)
- LEO VEHICLE
- TRUCK MOUNTED ATTENUATOR
- SAFETY FENCING
- BARRIER
- BUS STOP

NOTES:

1. REFERENCE COA STANDARD DETAILS (SHEET 00G24) @ 30 MPH

THIS CONFORMED DOCUMENT IS RELEASED FOR THE CONVENIENCE OF THE CONTRACTOR UNDER THE AUTHORITY OF:

LINDA L. BARLOW, PE — 11-01-2022
TX LIC NO. 63878 — DATE

SEE DISCLAIMER FOR LIMITATIONS OF USE.

CONTRACT DOCUMENTS DATED FEBRUARY 24,2022, AS PART OF THE BIDDING DOCUMENTS (DRAWINGS AND SPECIFICATIONS) AND SUBSEQUENTLY ISSUED ADDENDA HAVE BEEN MERGED INTO ONE CONFORMING SET OF DOCUMENTS FOR THE CONVENIENCE OF THE CONTRACTOR. IF INCONSISTENCIES OR AMBIGUITIES BETWEEN "CONFORMED" DOCUMENTS AND CONTRACT DOCUMENTS ARE FOUND, TEH CONTRACT DOCUMENTS SHALL GOVERN.

REV	DATE	BY	DESCRIPTION
			CONFORMED DOCUMENTS

DESIGNED LLB
DRAWN EJB
CHECKED RCJ
DATE NOVEMBER 2022

ORIGINAL SEALED BY LINDA L. BARLOW 2-24-2022 TXPE 63878

HVJ ASSOCIATES
1701 DIRECTORS BLVD
SUITE 910
AUSTIN, TX 78744
737-222-5151
TEXAS FIRM NO. F-000646

carollo®
TBPE No. F-882

CITY OF AUSTIN — FOUNDED 1839

CITY OF AUSTIN

CITY OF AUSTIN
WILD HORSE RANCH WWTP EXPANSION
GENERAL
TRAFFIC CONTROL PLAN
CONSTRUCTION ENTRANCE

VERIFY SCALES
BAR IS ONE INCH ON ORIGINAL DRAWING
0 1"
IF NOT ONE INCH ON THIS SHEET, ADJUST SCALES ACCORDINGLY

JOB NO. 10976A.10
DRAWING NO. 00G23
SHEET NO. 25 OF 464

LAST SAVED BY: ejbeeman

PROJECT NO. 10976A10 FILE NAME: 10976A100G012.dgn

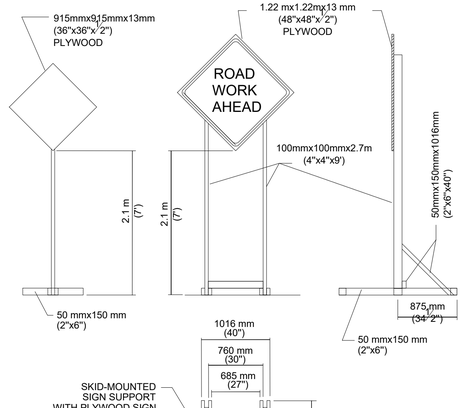

(LONG TERM AND INTERMEDIATE-TERM STATIONARY WORK)

TEMPORARY SIGN SUPPORT

SEE STANDARD 804S-5
SHEET 12 OF 13 AND SHEET 13 OF 13
FOR GENERAL NOTES AND DEVICE SPACING.

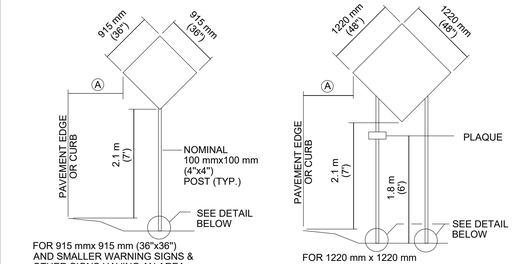

WOOD POST SIGN SUPPORT USED AS
FIXED SIGN SUPPORTS

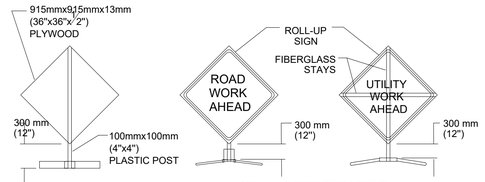

300 mm (1') MOUNTING HEIGHT
(SHORT TERM AND SHORT DURATION WORK)

PORTABLE SIGN SUPPORT

SEE STANDARD 804S-5
SHEET 12 OF 13 AND
SHEET 13 OF 13 FOR
GENERAL NOTES AND DEVICE SPACING.

1. WARNING SIGNS SHALL BE ORANGE, FLUORESCENT RED-ORANGE OR FLUORESCENT YELLOW-ORANGE IN COLOR. THE FLUORESCENT VERSIONS OF ORANGE PROVIDE HIGHER CONSPICUITY THAN STANDARD ORANGE, ESPECIALLY DURING TWILGHT. ALL SIGNS USED AT NIGHT SHALL BE EITHER RETRORE-FLECTIVE, WITH A MATERIAL THAT HAS A SMOOTH, SEALED OUTER SURFACE, OR ILLUMINATED TO SHOW SIMILAR SHAPE AND COLOR BOTH DAY AND NIGHT. SIGN ILLUMINATION MAY BE EITHER IN-TERNAL OR EXTERNAL. ROADWAY LIGHTING DOES NOT MEET THE REQUIREMENTS FOR SIGN ILLUMINATION.
2. TYPE A FLASHING WARNING LIGHTS MAY BE USED IN CONJUNCTION WITH SIGNS AT NIGHT. STANDARD ORANGE FLAGS MAY BE USED FOR DAY TIME OPERATIONS. HOWEVER, NEITHER LIGHTS NOR FLAGS MAY BLOCK THE SIGN LEGEND.
3. SIGNS SHOULD BE LOCATED ON THE RIGHT-HAND SIDE OF THE ROADWAY. WHEN SPECIAL EMPHASIS IS NEEDED, SIGNS MAY BE PLACE ON BOTH THE LEFT AND RIGHT SIDES OF ROADWAY. SIGNS SHALL BE PLACED ON BOTH THE LEFT AND RIGHT SIDES OF ONE-WAY OR DIVIDED ROADWAYS. SIGNS USED FOR LONG-TERM STATIONARY AND INTERMEDIATE-TERM STATIONARY WORK SHALL BE MOUNTED AT A HEIGHT OF AT LEAST 2.1 m (7') MEASURED FROM THE BOTTOM OF THE SIGN. THE HEIGHT TO THE BOTTOM OF A SECONDARY SIGN MOUNTED BELOW ANOTHER SIGN MAY BE O.3 m (1') LESS THAN THE APPROPRIATE HEIGHT ABOVE.
4. SIGNS MAY BE MOUNTED ON PORTABLE SUPPORTS FOR SHORT-TERM, SHORT DURATION, MOBILE CON-DITIONS AND EMERGENCIES. SIGNS MOUNTED ON PORTABLE SUPPORTS SHALL BE AT A HEIGHT OF AT LEAST 0.3 m (1'), MEASURED FROM THE BOTTOM OF THE SIGN.
5. ALL SIGN SYSTEMS SHOULD BE CRASHWORTHY. NO SIGN MOUNTS SHALL BLOCK OR IMPEDE SIDEALKS UNLESS NO OTHER OPTION IS AVAILABLE. ONLY SANDBAGS SHOULD BE USED FOR BALLASTING SIGN MOUNTS.

TABLE VI-3 TYPICAL CONSTRUCTION WARNING SIGN SIZE AND SPACING

Roadway Classi fication	Posted Speed	Sign Spacing ★	Long-term Stationary Or Intermediate-term Stationary Approaching Warning Signs CW20 Series And CW22-1 Sign		Short-term Stationary Or Short Duration Approach Warning Signs CW22 Series		Other Warning Signs
			Standard	Minimum[4]	Standard	Minimum[4]	Standard
Conven.	KPH (MPH)	meter (feet)	mm (inches)	mm (inches)	mm (inches)	mm (inches)	mm (inches)
	50 (30)	40 (120)	1220x1220 (48x48)	915x915 (36x36)			
	55 (35)	50 (160)			915x915 (36x36)		915x915 (36x36)
	65 (40)	75 (240)					
	70 (45)	100 (320)		Use Standard Size		Use Standard Size	
	80 (50)	120 (400)					
	90 (55)	150 (500) 2					
	100 (60)	180 (600) 2			1220x1220 (48x48)		1220x1220 (48x48)
	105 (65)	210 (700) 2					
	115 (70)	240 (800) 2					
Exp. or Fwy	★★	★★ 3			★★★	★★★	★★★

★ MINIMUM DISTANCE FROM WORK TO 1st ADVANCE WARNING SIGN AND/OR DISTANCE BETWEEN EACH ADDITIONAL SIGN.
★★ FOR TYPICAL SIGN SPACINGS ON EXPRESSWAYS AND FREEWAYS, REFER TO THE CURRENT ADDITION OF TMUTCD.
★★★ SMALLER SIGN SIZES MAY BE USED WHERE SIGN DESIGNS HAVE NOT BEEN INCLUDED IN THE "STANDARD HIGHWAY SIGNS DESIGN MANUAL".

1. SPECIAL OR LARGER SIZE SIGNS MAY BE USED AS NECESSARY.
2. DISTANCE BETWEEN SIGNS SHOULD BE INCREASED AS REQUIRED TO HAVE 450 m (1500') OR MORE ADVANCE WARNING.
3. DISTANCE BETWEEN SIGNS SHOULD BE INCREASED AS REQUIRED TO HAVE A 0.8 km (½ MILE) OR MORE ADVANCE WARNING.
4. FOR USE ONLY ON SECONDARY ROADS OR CITY STREETS WHERE SPEEDS ARE LOW.

1. ALL TRAFFIC CONTROL DEVICES, SIGNS, BARRICADES AND WARNING SIGNS SHALL BE FURNISHED, PLACED, CONSTRUCTED AND MAINTAINED IN THE APPROPRIATE TYPES AND SIZES AND FLAGGER OPERATIONS EXECUTED IN ACCORDANCE WITH THE CURRENT EDITION OF THE TEXAS MANUAL ON UNIFORM CONTROL DEVICES (TMUTCD), THE CITY OF AUSTIN STANDARD SPECIFICATIONS SERIES 800 AND THE CITY OF AUSTIN TRANS-PORTATION CRITERIA MANUAL, OR AS DIRECTED BY THE ENGINEER OR DESIGNATED RE-PRESENTATIVE. IF A CONFLICT ARISES THEN THE CITY OF AUSTIN TRANSPORTATION CRITERIA MANUAL SHALL CONTROL UNLESS OTHERWISE INSTRUCTED BY THE ENGINEER OR DESIGNATED REPRESENTATIVE.
2. THE CONTRACTOR SHALL NOTIFY THE TRANSPORTATION DIVISION OF THE DEPARTMENT OF PUBLIC WORKS AT 974-7024 NO LATER THAN THE MONDAY OF THE WEEK DURING WHICH THE CONTRACTOR INTENDS TO SET UP BARRICADES TO START CONSTRUCTION.
3. PROPOSED CONSTRUCTION TRAFFIC MOVEMENTS MAY REQUIRE EXISTING SIGNAL HEADS TO BE RELOCATED. THE CITY OF AUSTIN WILL REVIEW SIGNAL HEAD LOCATIONS DURING CONSTRUCTION AND PERFORM THE REQUIRED ADJUSTMENTS. THE CONTRACTOR SHALL CONTACT THE TRANSPORTATION DIVISION OF THE DEPARTMENT OF PUBLIC WORKS AT 974-7024, THREE (3) DAYS PRIOR TO PLACMENT ANY TRAFFIC CONTROLS WHICH MAY REQUIRE SIGNAL HEAD ADJUSTMENTS/RELOCATION.
4. THE CONTRACTOR SHALL PROVIDE ONE (1) FULL-TIME OFF-DUTY, UNIFORMED AUSTIN POLICE DEPARTMENT CERTIFIED PEACE OFFICER AND ONE (1) VEHICLE OF THE TYPE APPROVED BY THE ENGINEER OR DESIGNATED REPRESENTATIVE FOR TEMPORARY LANE CLOSURES WHEN UNDERSEALING, MILLING, PAVING AND WHEN WORKING IN INTERSECTIONS AS PART OF THE TRAFFIC CONTROL OPERATIONS. THE PEACE OFFICER SHALL BE ABLE TO SHOW PROOF OF CERTIFICATION BY THE TEXAS COMMISSION ON LAW ENFORCEMENT OFFICER STANDARDS.
5. THE CONTRACTOR SHALL NOTIFY ALL OTHER GOVERNMENTAL AGENCIES WHOSE RIGHTS-OF-WAY ARE AFFECTED BY HIS WORK ACTIVITIES. THE CONTRACTOR SHALL PROVIDE ANY ADDITIONAL TRAFFIC CONTROL DEVICES THAT THEY MAY NEED.
6. THE CONTRACTOR SHALL MAINTAIN ONE (1) DUST-FREE LANE OF TRAFFIC IN EACH DIRECTION AT ALL TIMES, UNLESS OTHERWISE NOTED IN THE DRAWINGS OR APPROVED THE ENGINEER OR DESIGNATED REPRESENTATIVE.
7. THERE SHALL BE A MINIMUM OF THREE (3) METERS (10 FEET) CLEAR WIDTH FOR EACH LANE OF TRAFFIC IN CHANNELIZED AREAS, UNLESS OTHERWISE NOTED ON THE DRAWINGS OR APPROVED BY THE ENGINEER OR DESIGNATED REPRESENTATIVE.
8. THE CONTRACTOR SHALL MAINTAIN DRIVEWAY ACCESS AT ALL TIMES. IF ACCESS CANNOT BE MAINTAINED, THE CONTRACTOR WITH THE APPROVAL OF THE ENGINEER OR DESIGNATED REPRESENTATIVE SHALL PROVIDE AT LEAST 24 HOUR WRITTEN NOTICE OF LIMITED ACCESS TO AFFECTED PROPERTY OWNERS. THE CONTRACTOR SHALL PROVIDE BUSINESS ACCESS SIGNS AS NEEDED TO NFORM DRIVERS OF THE LOCATIONS OF ALL DRIVEWAYS.
9. TEMPORARY LANE CLOSURES IN THE CENTRAL BUSINESS DISTRICT (CBD) OR ON ARTERIAL STREETS SHALL NOT BE PERMITTED DURING THE HOURS OF 7 AM TO 9 AM AND 4 PM TO 6PM MONDAY THROUGH FRIDAY UNLESS PRIOR APPROVAL HAS BEEN OBTAINED FROM THE TRANSPORTATION DIVISION.
10. TRAFFIC CONTROL SHOWN ON STANDARD DETAILS IS TYPICAL. ADDITIONAL SIGNING AND/OR BARRICADING, AS WELL AS TEMPORARY PAVEMENT MARKINGS AND OBLITERATION/RESTORATION OF EXISTING PAVEMENT MARKINGS, MAY BE REQUIRED DEPENDING ON FIELD CONDITIONS. FIELD ADJUSTMENTS TO TRAFFIC CONTROLS WILL NOT BE PAID FOR DIRECTLY, BUT WILL BE CONSIDERED SUBSIDIARY TO ITEM NO. 803S "BARRICADES, SIGNS AND TRAFFIC HANDLING".
11. THE CONTRACTOR SHALL DESIGNATE A COMPETENT PERSON FOR TRAFFIC CONTROL. THE COMPETENT PERSON SHALL MAKE INSPECTIONS OF THE TRAFFIC CONTROL DEVICES AT LEAST TWO (2) TIMES A DAY (ONCE AT THE BEGINNING OF THE DAY AND ONCE AT THE END OF THE DAY), INCLUDING NON-WORKING DAYS, ENSURING THAT ALL DEVICES ARE IN THEIR PROPER PLACE AND ARE IN WORKING ORDER.
12. ALL DEVICES SHALL BE MADE USING MATERIALS LISTED ON THE TxDOT APPROVED PRODUCTS LIST.

13. ALL PERSONS WORKING WITHIN THE RIGHT-OF-WAY SHALL WEAR A BRIGHTLY COLORED SAFETY VEST. FOR NIGHTTIME WORK THE VEST SHALL BE RETROREFLECTIVE,
14. WHEN AN INTERSECTION IS CLOSED FOR CONSTRUCTION, THE CONTRACTOR SHALL PROCEED WITH CONSTRUCTION IN SUCH A MANNER THAT THE CLOSURE TIME IS MINIMIZED.
15. THE CONTRACTOR SHALL NOTIFY THE CAPITAL METRO DISPATCHER AT 385-4295 ONE (1) WEEK PRIOR TO LANE CLOSURES ADJACENT TO BUS STOPS.

DURATION OF WORK
WORK DURATION IS A MAJOR FACTOR IN DETERMINING THE NUMBER AND TYPES OF DEVICES USED IN TEMPORARY TRAFFIC ZONES. THE FIVE (5) CATEGORIES OF WORK DURATION AND THEIR TIME AT A LOCATION ARE AS FOLLOWS:

- LONG-TERM STATIONARY-WORK THAT OCCUPIES A LOCATION FOR MORE THAN 3 DAYS.
- INTERMEDIATE-TERM STATIONARY-WORK THAT OCCUPIES A LOCATION FROM OVERNIGHT TO 3 DAYS.
- SHORT-TERM STATIONARY-DAYTIME WORK THAT OCCUPIES A LOCATION FROM 1 TO 12 HOURS.
- SHORT-DURATION WORK THAT OCCUPIES A LOCATION UP TO 1 HOUR.
- MOBILE-WORK THAT MOVES INTERMITTENTLY OR CONTINUOUSLY.

Typical Transition Lengths and Suggested Maximum Spacing of Devices

Posted Speed KPH (MPH)	Formula	Minimum Desirable Taper Lengths (L) Meters (Feet) 3.0(10) Offset Meters (feet)	3.3(11) Offset Meters (feet)	3.6(12) Offset Meters (feet)	Suggested Max. Device Spacing On a taper Meters (feet)	On a tangent Meters (feet)	Suggested Sign Spacing Meters (Feet) "X" Dimension
50 (30)	$L=\frac{WS^2}{60}$	45 (150)	50 (165)	55 (180)	9 (30)	15-20 (60-75)	40 (120)
55 (35)		65 (205)	70 (225)	75 (245)	10 (35)	25-25 (70-90)	50 (160)
65 (40)		80 (265)	90 (295)	100 (320)	12 (40)	25-30 (80-100)	75 (240)
70 (45)	L=WS	135 (450)	(495)	165 (540)	13 (45)	25-30 (90-110)	100 (320)
80 (50)		150 (500)	165 (550)	180 (600)	15 (50)	30-35 (100-125)	120 (400)
90 (55)		165 (550)	185 (605)	200 (660)	16 (55)	35-40 (110-140)	150 (500)
100 (60)		180 (600)	200 (660)	220 (720)	18 (60)	40-45 (120-150)	180 (600)
105 (65)		195 (650)	215 (715)	235 (780)	19 (65)	40-50 (130-165)	210 (700)
115 (70)		215 (700)	235 (770)	255 (840)	21 (70)	45-55 (140-175)	240 (800)

THIS CONFORMED DOCUMENT IS RELEASED FOR THE CONVENIENCE OF THE CONTRACTOR UNDER THE AUTHORITY OF:

LINDA L. BARLOW, PE — 11-01-2022
TX LIC NO. 63878 — DATE

SEE DISCLAIMER FOR LIMITATIONS OF USE.

CONTRACT DOCUMENTS DATED FEBRUARY 24,2022, AS PART OF THE BIDDING DOCUMENTS (DRAWINGS AND SPECIFICATIONS) AND SUBSEQUENTLY ISSUED ADDENDA HAVE BEEN MERGED INTO ONE CONFORMING SET OF DOCUMENTS FOR THE CONVENIENCE OF THE CONTRACTOR. IF INCONSISTENCIES OR AMBIGUITIES BETWEEN "CONFORMED" DOCUMENTS AND CONTRACT DOCUMENTS ARE FOUND, TEH CONTRACT DOCUMENTS SHALL GOVERN.

CITY OF AUSTIN DEPARTMENT OF PUBLIC WORKS	TRAFFIC CONTROL SIGNS	STANDARD NO.
RECORD COPY SIGNED BY SAM ANGOORI — 01/04/10 ADOPTED	THE ARCHITECT/ENGINEER ASSUMES RESPONSIBILITY FOR APPROPRIATE USE OF THIS STANDARD.	804S-5 5 OF 13

CITY OF AUSTIN DEPARTMENT OF PUBLIC WORKS	TRAFFIC CONTROL SIGNS	STANDARD NO.
RECORD COPY SIGNED BY SAM ANGOORI — 01/04/10 ADOPTED	THE ARCHITECT/ENGINEER ASSUMES RESPONSIBILITY FOR APPROPRIATE USE OF THIS STANDARD.	804S-5 6 OF 13

CITY OF AUSTIN DEPARTMENT OF PUBLIC WORKS	TRAFFIC CONTROL SIGNS	STANDARD NO.
RECORD COPY SIGNED BY SAM ANGOORI — 01/04/10 ADOPTED	THE ARCHITECT/ENGINEER ASSUMES RESPONSIBILITY FOR APPROPRIATE USE OF THIS STANDARD.	804S-5 7 OF 13

CITY OF AUSTIN DEPARTMENT OF PUBLIC WORKS	GENERAL TRAFFIC CONTROL NOTES	STANDARD NO.
RECORD COPY SIGNED BY SAM ANGOORI — 01/04/10 ADOPTED	THE ARCHITECT/ENGINEER ASSUMES RESPONSIBILITY FOR APPROPRIATE USE OF THIS STANDARD.	804S-5 12 OF 13

CITY OF AUSTIN DEPARTMENT OF PUBLIC WORKS	GENERAL TRAFFIC CONTROL NOTES	STANDARD NO.
RECORD COPY SIGNED BY SAM ANGOORI — 01/04/10 ADOPTED	THE ARCHITECT/ENGINEER ASSUMES RESPONSIBILITY FOR APPROPRIATE USE OF THIS STANDARD.	804S-5 13 OF 13

REV	DATE	BY	DESCRIPTION
			CONFORMED DOCUMENTS

DESIGNED LLB
DRAWN EJB
CHECKED RCJ
DATE NOVEMBER 2022

ORIGINAL SEALED BY LINDA L. BARLOW 2-24-2022 TXPE 63878

HVJ ASSOCIATES
1701 DIRECTORS BLVD
SUITE 910
AUSTIN, TX 78744
737-222-5151
TEXAS FIRM NO. F-000646

carollo® TBPE No. F-882

CITY OF AUSTIN — FOUNDED 1839

CITY OF AUSTIN

CITY OF AUSTIN
WILD HORSE RANCH WWTP EXPANSION
GENERAL
COA STANDARD DETAILS

VERIFY SCALES
BAR IS ONE INCH ON ORIGINAL DRAWING
0 — 1"
IF NOT ONE INCH ON THIS SHEET, ADJUST SCALES ACCORDINGLY

JOB NO. 10976A.10
DRAWING NO. 00G24
SHEET NO. 26 OF 464

LAST SAVED BY: ejbeeman

PROJECT NO. 10976A10 FILE NAME: 10976A100G012.dgn

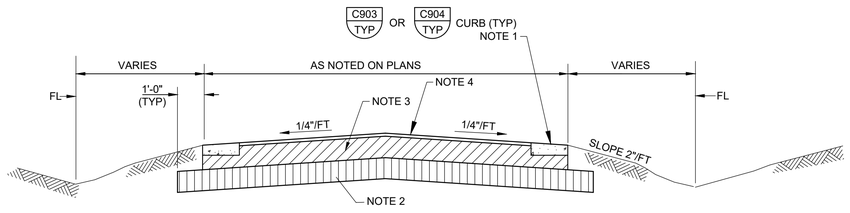

NOTES:

1. PROVIDE RIBBON CURB UNLESS NOTED OTHERWISE. REFER TO PAVING AND GRADING SITE PLAN FOR CURB TYPE.
2. PREPARE AND COMPACT 8" STABILIZED LIME STABILIZED SUBGRADE PER COA STANDARD SPEC 210S.
3. PLACE 9" FLEXIBLE CRUSHED STONE AGGREGATE BASE PER COA STANDARD SPEC 210S.
4. FINISH WITH 3" HOT MIX ASPHALT CONCRETE SURFACE, TYPE C. FINISH SURFACE WITH SEAL COAT.
5. SEE GRADING PLAN FOR PROPOSED ELEVATIONS AND ROADWAY GRADES. REFER TO GRADING PLAN SHEETS.
6. TACK ALL HARD SURFACES. A TACK COAT MAY BE REQUIRED OVER THE PRIME (PER ENGINEER'S DIRECTIVE) IF THE SERVICE REMAINS SUBSTANTIALLY CONTAMINATED AFTER SWEEPING IMMEDIATELY PRIOR TO PAVING.

C901 TYP — PAVEMENT SECTION #1

NTS

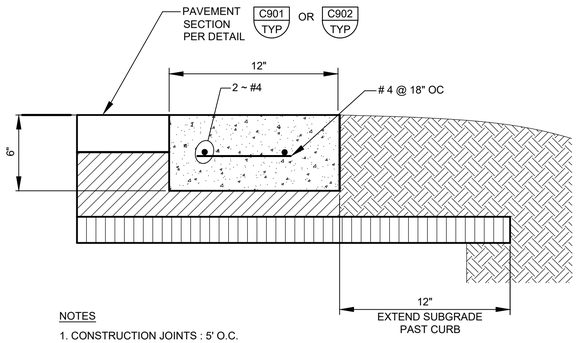

NOTES

1. CONSTRUCTION JOINTS : 5' O.C.
2. FINISH : LIGHT BROOM W/TOOLED EDGES
3. SLOPE : AWAY FROM PAVEMENT

C904 TYP — RIBBON CURB DETAIL

NTS

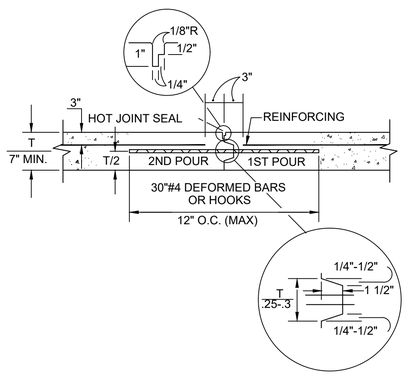

C907 TYP — PAVEMENT CONSTRUCTION JOINT DETAIL

NTS

THIS CONFORMED DOCUMENT IS RELEASED FOR THE CONVENIENCE OF THE CONTRACTOR UNDER THE AUTHORITY OF:

CASEY G. WAUTERS, P.E. — 11-01-22
TX LIC NO. 93889 — DATE

SEE DISCLAIMER FOR LIMITATIONS OF USE.

C905 TYP — DITCH SECTION DETAIL

NTS

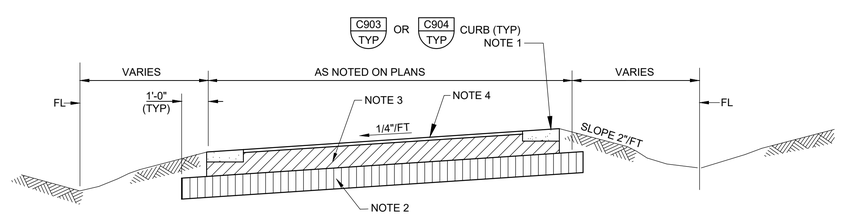

NOTES:

1. PROVIDE RIBBON CURB UNLESS NOTED OTHERWISE. REFER TO PAVING AND GRADING SITE PLAN FOR CURB TYPE.
2. PREPARE AND COMPACT 8" STABILIZED LIME STABILIZED SUBGRADE PER COA STANDARD SPEC 210S.
3. PLACE 9" FLEXIBLE CRUSHED STONE AGGREGATE BASE PER COA STANDARD SPEC 210S.
4. FINISH WITH 3" HOT MIX ASPHALT CONCRETE SURFACE, TYPE C. FINISH SURFACE WITH SEAL COAT.
5. SEE GRADING PLAN FOR PROPOSED ELEVATIONS AND ROADWAY GRADES. REFER TO GRADING PLAN SHEETS.
6. TACK ALL HARD SURFACES. A TACK COAT MAY BE REQUIRED OVER THE PRIME (PER ENGINEER'S DIRECTIVE) IF THE SERVICE REMAINS SUBSTANTIALLY CONTAMINATED AFTER SWEEPING IMMEDIATELY PRIOR TO PAVING.

C902 TYP — PAVEMENT SECTION #2

NTS

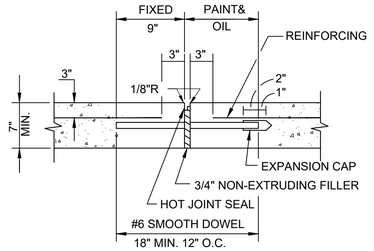

C906 TYP — PAVEMENT EXPANSION JOINT DETAIL

NTS

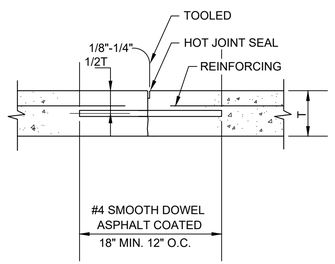

C908 TYP — PAVEMENT CONTRACTION JOINT DETAIL

NTS

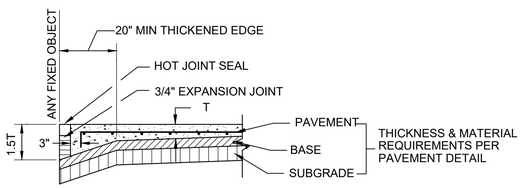

C909 TYP — PAVEMENT THICKENED SECTION DETAIL

NTS

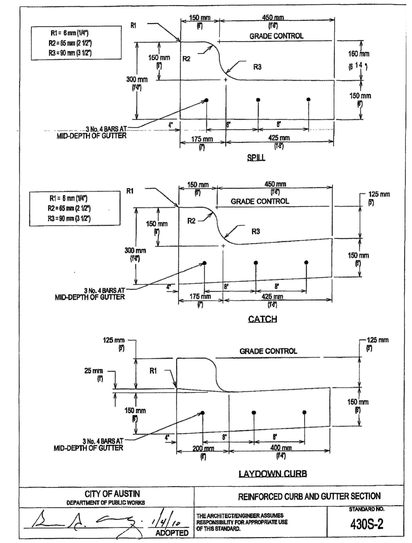

C903 TYP — CURB & GUTTER SECTION

NTS

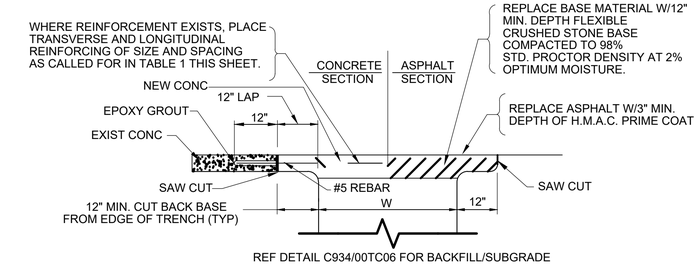

REF DETAIL C934/00TC06 FOR BACKFILL/SUBGRADE

TABLE 1
SLAB DEPTHS & REINFORCING

MIN. DEPTH OF SLAB (IN.)	WIDTH OF TRENCH (IN.)	SIZE OF BAR EACH WAY	SPACING (IN.) EACH WAY
8	18	4	9
8	24	4	8
8	30	4	7
8	30	4	6
10	42	4	8 1/2
10	48	4	7 1/2
10	54	4	7
10	60	4	6 1/2
10	66	5	9
10	72	6	8 1/2
10	78	6	8
10	84	6	7 1/2

DETAIL IS PROVIDED IN THE CASE THAT EXISTING PCC IS DAMAGED AND NEEDS TO BE REPAIRED.

C910 TYP — PAVEMENT REPAIR DETAIL

NTS

CONTRACT DOCUMENTS DATED JUNE 10, 2022, AS PART OF THE BIDDING DOCUMENTS (DRAWINGS AND SPECIFICATIONS) AND SUBSEQUENTLY ISSUED ADDENDA HAVE BEEN MERGED INTO ONE CONFORMING SET OF DOCUMENTS FOR THE CONVENIENCE OF THE CONTRACTOR. IF INCONSISTENCIES OR AMBIGUITIES BETWEEN "CONFORMED" DOCUMENTS AND CONTRACT DOCUMENTS ARE FOUND, THE CONTRACT DOCUMENTS SHALL GOVERN.

REV	DATE	BY	DESCRIPTION
			CONFORMED DOCUMENTS

DESIGNED AW
DRAWN AW
CHECKED SGE
DATE FEBRUARY 2022

**
ORIGINAL
SEALED BY
CASEY G. WAUTERS, P.E.
2/28/2022
TX PE 93889
**

AECOM TECHNICAL SERVICES INC.
13640 BRIARWICK DRIVE, SUITE 200
AUSTIN, TEXAS 78729
WWW.AECOM.COM
TBPE REG. NO. F-3580

carollo
TBPE No. F-882

CITY OF AUSTIN
FOUNDED 1839

CITY OF AUSTIN

CITY OF AUSTIN
WILD HORSE RANCH WWTP EXPANSION
TYPICAL DETAILS
CIVIL TYPICAL DETAILS SHEET 1

VERIFY SCALES
BAR IS ONE INCH ON ORIGINAL DRAWING
0 — 1"
IF NOT ONE INCH ON THIS SHEET, ADJUST SCALES ACCORDINGLY

JOB NO. 10976A.10
DRAWING NO. 00TC01
SHEET NO. 27 OF 464

LAST SAVED BY: dseivert

PROJECT NO. 9585A10 FILE NAME: 9585A10_SheetSeed.dgn

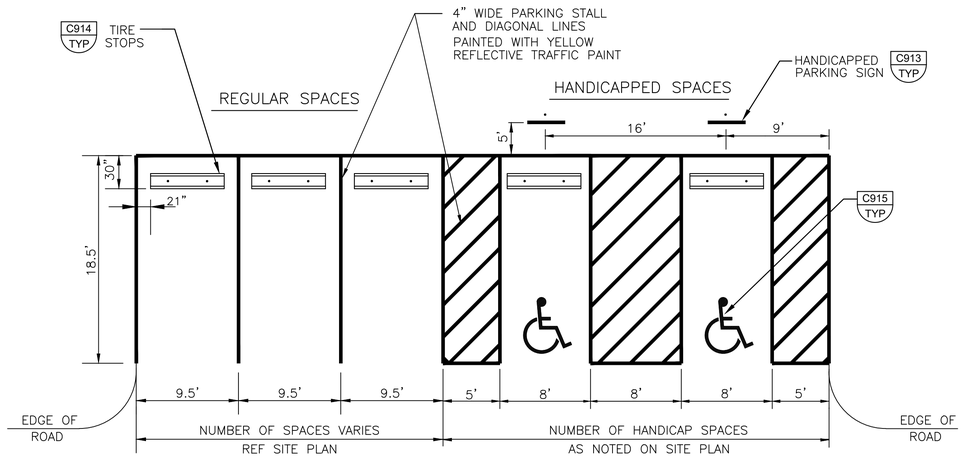

NOTE:

1. 4' WIDE PATH OF 4" PAINTED DIAGONAL LINES TO BE EXTENDED FROM HANDICAPPED SPACES TO BUILDING ENTRANCE AS SHOWN ON SITE DRAWING.
2. DETAIL REPRESENTS TYPICAL STALL LAYOUT. NUMBER AND TYPE OF STALLS ARE SHOWN ON SITE PLAN.

C911 TYP — TYPICAL PARKING STALL LAYOUT
NTS

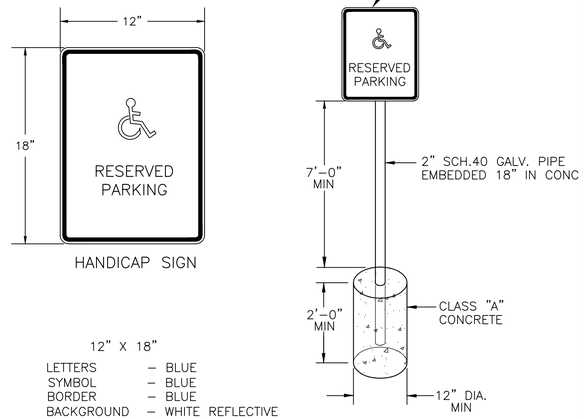

C913 TYP — HANDICAP SIGN DETAIL
NTS

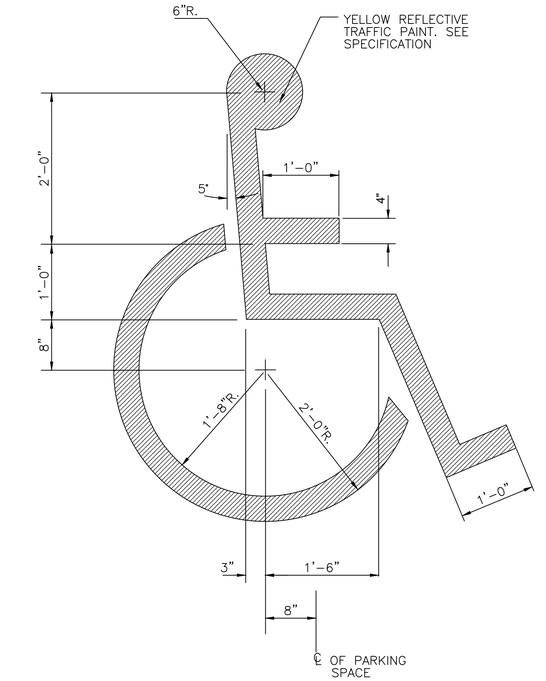

C915 TYP — HANDICAP SYMBOL
NTS

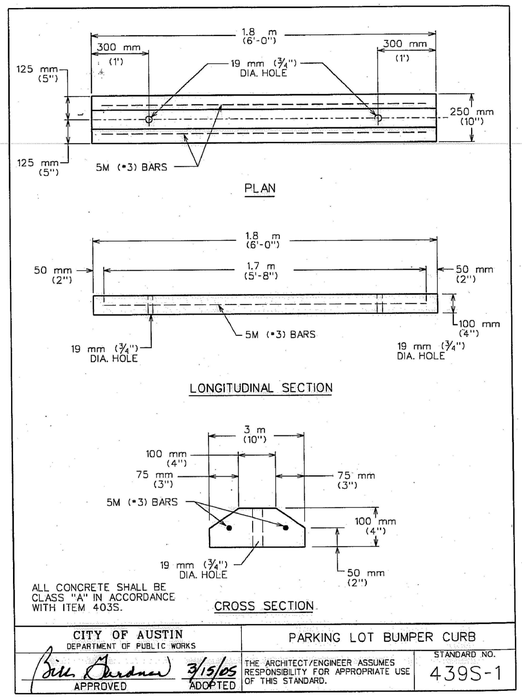

CITY OF AUSTIN DEPARTMENT OF PUBLIC WORKS	PARKING LOT BUMPER CURB	
Bill Bardner 3/15/05 APPROVED ADOPTED	THE ARCHITECT/ENGINEER ASSUMES RESPONSIBILITY FOR APPROPRIATE USE OF THIS STANDARD.	STANDARD NO. 439S-1

C914 TYP — TIRE STOP DETAIL
NTS

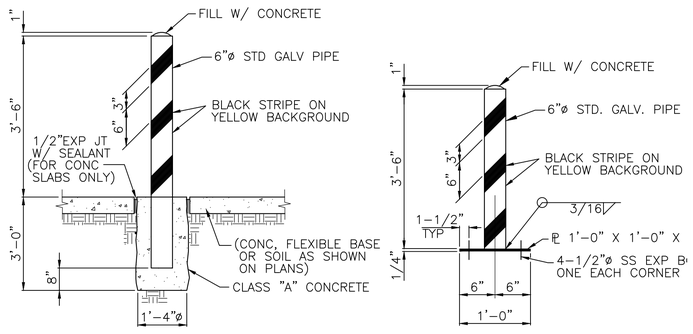

(MUST BE APPROVED BY ENGINEER)

C912 TYP — BOLLARD DETAIL
NTS

THIS CONFORMED DOCUMENT IS RELEASED FOR THE CONVENIENCE OF THE CONTRACTOR UNDER THE AUTHORITY OF:

Casey Wauters 11-01-22

CASEY G. WAUTERS, P.E. DATE
TX LIC NO. 93889

SEE DISCLAIMER FOR LIMITATIONS OF USE.

CONTRACT DOCUMENTS DATED JUNE 10, 2022, AS PART OF THE BIDDING DOCUMENTS (DRAWINGS AND SPECIFICATIONS) AND SUBSEQUENTLY ISSUED ADDENDA HAVE BEEN MERGED INTO ONE CONFORMING SET OF DOCUMENTS FOR THE CONVENIENCE OF THE CONTRACTOR. IF INCONSISTENCIES OR AMBIGUITIES BETWEEN "CONFORMED" DOCUMENTS AND CONTRACT DOCUMENTS ARE FOUND, THE CONTRACT DOCUMENTS SHALL GOVERN.

REV	DATE	BY	DESCRIPTION
			CONFORMED DOCUMENTS

DESIGNED AW
DRAWN AW
CHECKED SGE
DATE FEBRUARY 2022

** ORIGINAL SEALED BY CASEY G. WAUTERS, P.E. 2/28/2022 TX PE 93889 **

AECOM TECHNICAL SERVICES INC.
13640 BRIARWICK DRIVE, SUITE 200
AUSTIN, TEXAS 78729
WWW.AECOM.COM
TBPE REG. NO. F-3580

carollo
TBPE No. F-882

CITY OF AUSTIN
FOUNDED 1839
CITY OF AUSTIN

CITY OF AUSTIN
WILD HORSE RANCH WWTP EXPANSION
TYPICAL DETAILS
CIVIL TYPICAL DETAILS SHEET 2

VERIFY SCALES
BAR IS ONE INCH ON ORIGINAL DRAWING
0 1"
IF NOT ONE INCH ON THIS SHEET, ADJUST SCALES ACCORDINGLY

JOB NO. 10976A.10
DRAWING NO. 00TC02
SHEET NO. 28 OF 464

LAST SAVED BY: dseivert

PROJECT NO. 9585A10 FILE NAME: 9585A10_SheetSeed.dgn

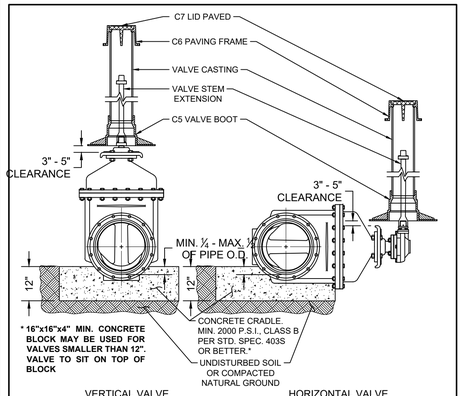

VERTICAL VALVE

HORIZONTAL VALVE
ONLY TO BE USED WHEN CALLED OUT ON THE DRAWINGS.

NOTES:
1. WELD SOCKET 2⅝" x 2" DEEP TO 1" SCH. 40 CARBON STEEL ROUND STEM EXTENSION, FITTED ON OPERATING NUT. [SCH. 80 FOR LENGTHS OVER 10'.]
2. VALVE CASTING SHALL BE 6" DI PIPE WITH BELL OR COLLAR CENTERED OVER VALVE BOOT.
3. NUT AT TOP OF VALVE EXTENSION ROD SHALL BE SQUARE 2" LONG WELDED TO TOP OF ROD.
4. VALVE STEM EXTENSIONS ARE REQUIRED ON ALL VALVES THAT EXCEED 3' DEEP FROM FINISHED GRADE. VALVE EXTENSIONS SHALL BE PLACED SUCH THAT THE EXTENSION NUT IS BETWEEN 12" AND 18" FROM FINISHED GRADE.

RECLAIMED WATER: ALL RECLAIMED PVC PIPE SHALL BE MANUFACTURED PURPLE PIPE. HDPE PIPE SHALL BE MANUFACTURED WITH PURPLE STRIPES. ALL OTHER PIPE AND APPURTENANCES SHALL BE MANUFACTURED PURPLE IF AVAILABLE. ALL PIPE AND FITTINGS THAT ARE NOT AVAILABLE FROM THE MANUFACTURER IN PURPLE SHALL BE PAINTED PURPLE PER SPL WW-3C. ALL BURIED DI AND CI PIPE AND FITTINGS SHALL ALSO BE WRAPPED IN PURPLE POLYETHYLENE PER SPL WW-27D. ALL COVERS SHALL HAVE **"RECLAIMED WATER"** CAST INTO THEM.

CITY OF AUSTIN AUSTIN WATER	TYPICAL GATE VALVE 4" - 16"	
RECORD COPY SIGNED BY KATHI L FLOWERS 05/18/2016 ADOPTED	THE ARCHITECT/ENGINEER ASSUMES RESPONSIBILITY FOR APPROPRIATE USE OF THIS STANDARD.	STANDARD NO. 511-AW-01 1 OF 4

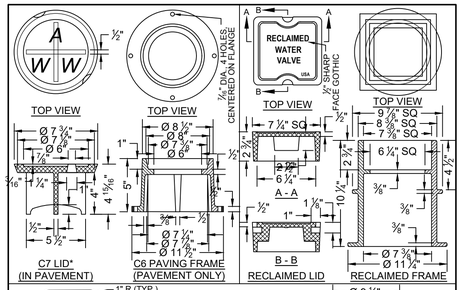

NOTES:
1. MATERIAL SHALL BE GRAY CAST IRON, ASTM A48, GRADE 30B.
2. THE MANUFACTURER'S IDENTIFICATION AND CASTING NUMBER, AND THE COUNTRY WHERE CAST, SHALL BE DISTINCTLY CAST ONTO EACH LID, FRAME, COLLAR AND BASE.
3. DRAFT AND SHRINKAGE ALLOWANCE SHALL BE IN ACCORDANCE WITH NORMAL FOUNDRY PRACTICE.
4. CASTING FINISH BY MANUFACTURER SHALL INCLUDE REMOVAL OF FINS AND FLASHING, AND PAINT WITH BLACK ASPHALT COATING.

WEIGHTS:
C7 LID: 13 LBS
RECLAIMED LID: 15 LBS
C6 FRAME: 23 LBS
RECLAIMED FRAME: 33 LBS
C5 BASE: 78 LBS

* LETTERING SHALL BE 1 ½" 2 PICK BAR SLOTS REQUIRED

CITY OF AUSTIN AUSTIN WATER	TYPICAL GATE VALVE 4" - 16"	
RECORD COPY SIGNED BY KATHI L FLOWERS 05/18/2016 ADOPTED	THE ARCHITECT/ENGINEER ASSUMES RESPONSIBILITY FOR APPROPRIATE USE OF THIS STANDARD.	STANDARD NO. 511-AW-01 2 OF 4

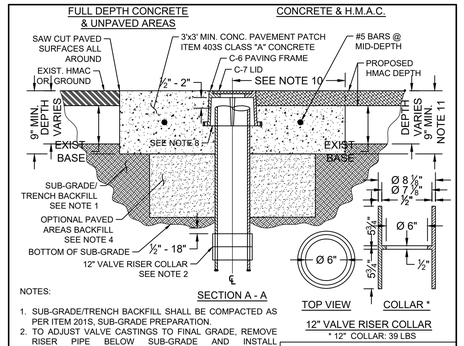

NOTES:
1. SUB-GRADE/TRENCH BACKFILL SHALL BE COMPACTED AS PER ITEM 201S, SUB-GRADE PREPARATION.
2. TO ADJUST VALVE CASTINGS TO FINAL GRADE, REMOVE RISER PIPE BELOW SUB-GRADE AND INSTALL APPROPRIATE LENGTH OF NEW RISER PIPE TO ACHIEVE FINAL GRADE. CONNECT THE TWO PIECES OF RISER PIPE WITH A 6" COLLAR MIN. 12" LENGTH APPROXIMATELY CENTERED ON THE JOINT WITH THE TOP OF SLEEVE LOCATED ½" - 18" BELOW SUB-GRADE. THE INSIDE "LIP" OF COLLAR TO BE PAINTED WITH FLUORESCENT WHITE PAINT OR COVERED WITH FLUORESCENT WHITE TAPE. ALTERNATE: FOR OPTIONAL SINGLE PIECE RISER INSTALLATION SEE SHEET 4 OF 4.
3. CLEAN VALVE BOX OF ALL DEBRIS DOWN TO THE NUT OF THE VALVE; NUT SHALL OPERATE WITH NO OBSTRUCTION.
4. WHERE CASTINGS TO BE REMOVED REQUIRE EXCAVATION GREATER THAN 20" DEEP, CONTRACTOR MAY ELECT TO FILL EXCAVATION WITH CONTROLLED LOW STRENGTH MATERIAL (SPEC. ITEM 402S) TO THE UNDERSIDE OF THE CONCRETE. PAVEMENT PATCH IN LIEU OF COMPACTED BACKFILL.
5. REINFORCING STEEL SHALL MEET SPEC. ITEM 406S.7.
6. NO MORE THAN 2 SECTIONS OF PIPE SHALL BE USED FROM VALVE TO FINAL GRADE.
7. BELL AND SPIGOT IS ACCEPTABLE FOR DEPTH OVER 18'.

CITY OF AUSTIN AUSTIN WATER	TYPICAL GATE VALVE 4" - 16"	
RECORD COPY SIGNED BY KATHI L FLOWERS 05/18/2016 ADOPTED	THE ARCHITECT/ENGINEER ASSUMES RESPONSIBILITY FOR APPROPRIATE USE OF THIS STANDARD.	STANDARD NO. 511-AW-01 3 OF 4

NOTES (CONT'):
8. PAVING FRAME SHALL BE FLUSH WITH THE CONC. PAD AND PLACED ½" - 2" ABOVE RISER PIPE (FRAME SHALL NOT REST ON RISER.)
9. IN UNPAVED AREAS, INSTALL ONE DELINEATOR STAKE IMMEDIATELY ADJACENT TO THE EDGE OF THE CONCRETE PAD. DELINEATOR SHALL BE BLUE FOR POTABLE WATER AND PURPLE FOR RECLAIMED WATER AND SHALL EXTEND AT LEAST 60" ABOVE GROUND. DELINEATORS SHALL HAVE 2" WIDE, WHITE IN COLOR, TYPE I REFLECTIVE TAPE MOUNTED DIAGONALLY AT 12" SPACING ON BOTH SIDES.
10. VALVE SHALL TYPICALLY BE CENTERED IN CONCRETE DIAMOND BUT MAY BE OFFSET WITH A MIN. OF 12" FROM CENTER OF VALVE LID TO EDGE OF CONCRETE IN ALL DIRECTIONS.
11. MIN. TOTAL DEPTH OF ASPHALT PLUS CONC. IS 9" AND MIN. DEPTH OF CONC. PAD SHALL BE 5"

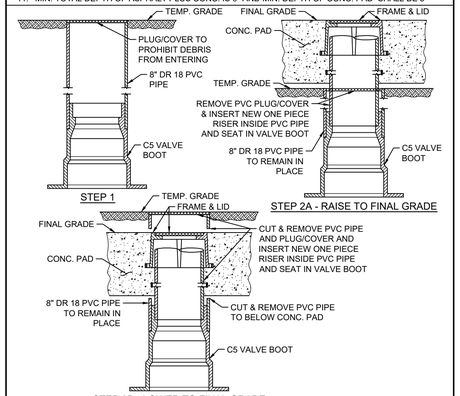

OPTIONAL ONE PIECE VALVE CASTING INSTALLATION

CITY OF AUSTIN AUSTIN WATER	TYPICAL GATE VALVE 4" - 16"	
RECORD COPY SIGNED BY KATHI L FLOWERS 05/18/2016 ADOPTED	THE ARCHITECT/ENGINEER ASSUMES RESPONSIBILITY FOR APPROPRIATE USE OF THIS STANDARD.	STANDARD NO. 511-AW-01 4 OF 4

C918 TYP — TYPICAL GATE VALVE INSTALLATION DETAIL
NTS

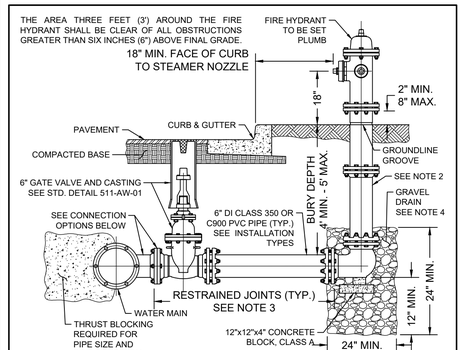

CITY OF AUSTIN AUSTIN WATER	FIRE HYDRANT	
RECORD COPY SIGNED BY KATHI L FLOWERS 05/18/2016 ADOPTED	THE ARCHITECT/ENGINEER ASSUMES RESPONSIBILITY FOR APPROPRIATE USE OF THIS STANDARD.	STANDARD NO. 511-AW-02 1 OF 3

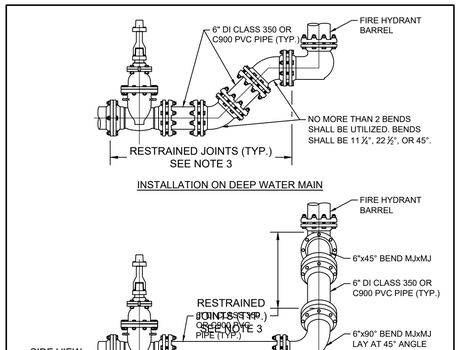

CITY OF AUSTIN AUSTIN WATER	FIRE HYDRANT	
RECORD COPY SIGNED BY KATHI L FLOWERS 05/18/2016 ADOPTED	THE ARCHITECT/ENGINEER ASSUMES RESPONSIBILITY FOR APPROPRIATE USE OF THIS STANDARD.	STANDARD NO. 511-AW-02 2 OF 3

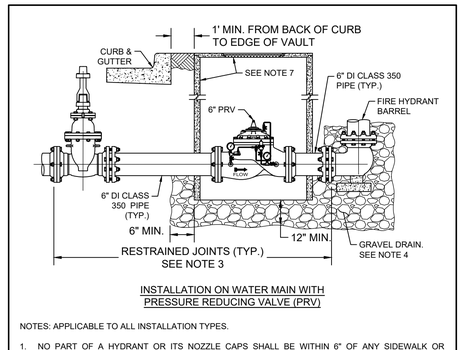

NOTES: APPLICABLE TO ALL INSTALLATION TYPES.
1. NO PART OF A HYDRANT OR ITS NOZZLE CAPS SHALL BE WITHIN 6" OF ANY SIDEWALK OR PEDESTRIAN RAMP. ANY FIRE HYDRANT PLACED NEAR A STREET CORNER SHALL BE LOCATED OUTSIDE THE CURVE RADIUS AND A MINIMUM OF 4' FROM RAMPS.
2. ONE BARREL EXTENSION NOT EXCEEDING 2' LENGTH MAY BE INSTALLED DIRECTLY BELOW THE FIRE HYDRANT IN ORDER TO MEET THE REQUIRED BURY DEPTH OF 4' - 5'. BREAK AWAY BOLTS (SHOE TYPES) SHALL BE PROPERLY SPACED AND PLACED.
3. FIRE LINE SHALL HAVE ALL JOINTS RESTRAINED FROM MAIN TO FIRE HYDRANT. JOINTS SHOWN MAY VARY. SEE SPL WW-27, WW-27A, AND WW-27B FOR RESTRAINT OPTIONS.
4. BELOW EACH HYDRANT, A DRAINAGE PIT 24" IN DIAMETER AND 12" DEEP SHALL BE EXCAVATED AND FILLED WITH COMPACTED COARSE GRAVEL OR BROKEN STONE MIXED WITH COARSE SAND UNDER AND AROUND THE BOWL OF THE HYDRANT, AND TO A LEVEL 12" ABOVE THE HYDRANT DRAIN OPENING (SEE STD. SPEC. 510). THE HYDRANT DRAINAGE PIT SHALL NOT BE CONNECTED TO A SANITARY SEWER. THE DRAIN GRAVEL SHALL BE COVERED WITH FILTER FABRIC PER STD. SPEC. 620S. FOR PRV, GRAVEL SHALL EXTEND UNDER THE PRV VAULT 12" MIN. DEPTH UNDER THE VAULT AND 6" MIN. BEYOND VAULT.
5. FOR FIRE HYDRANT LEADS AT A MAIN OUTLET LARGER THAN 6" DIAMETER, OUTLET SHALL BE FLANGED AND A FLG x FLG REDUCER SHALL BE INSTALLED DIRECTLY ON THE OUTLET.
6. WRAP 8 MIL. POLY-FILM WRAP ON ALL BURIED PIPE AND FITTINGS.
7. FOR HYDRANTS WITH PRV: CLASS III RCP VAULT 60" MIN. I.D. WITH REINFORCED PRECAST CONCRETE LID (AASHTO H-20 LOADING) WITH COA FRAME AND 32" COVER WITH LETTERING MODIFIED FOR WATER.

CITY OF AUSTIN AUSTIN WATER	FIRE HYDRANT	
RECORD COPY SIGNED BY KATHI L FLOWERS 05/18/2016 ADOPTED	THE ARCHITECT/ENGINEER ASSUMES RESPONSIBILITY FOR APPROPRIATE USE OF THIS STANDARD.	STANDARD NO. 511-AW-02 3 OF 3

C919 TYP — FIRE HYDRANT DETAIL
NTS

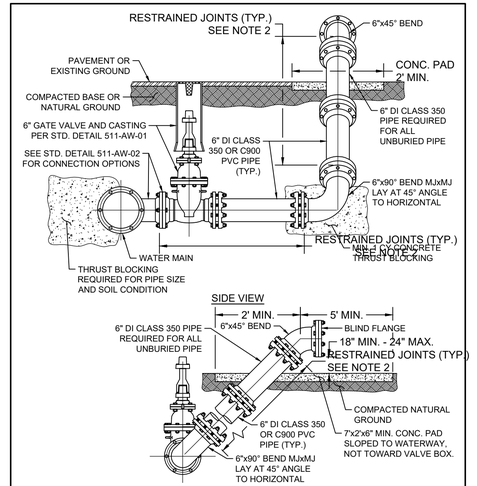

NOTES:
1. WRAP 8 MIL. POLY-FILM WRAP ON ALL BURIED PIPE AND FITTINGS.
2. PROVIDE RESTRAINED JOINTS FOR ALL JOINTS PER SPL WW-27A. FLGxFLG JOINTS ARE ACCEPTABLE FROM 90° BEND TO BLIND FLANGE.
3. EXTERIOR SURFACES OF EXPOSED PIPE SHALL BE PAINTED PER SPL WW-3C. POTABLE WATER PIPE SHALL BE PAINTED SAFETY BLUE.

CITY OF AUSTIN AUSTIN WATER	DRAIN VALVE	
RECORD COPY SIGNED BY KATHI L FLOWERS 05/18/2016 ADOPTED	THE ARCHITECT/ENGINEER ASSUMES RESPONSIBILITY FOR APPROPRIATE USE OF THIS STANDARD.	STANDARD NO. 511-AW-03 1 OF 1

C917 TYP — DRAIN VALVE
NTS

THIS CONFORMED DOCUMENT IS RELEASED FOR THE CONVENIENCE OF THE CONTRACTOR UNDER THE AUTHORITY OF:
CASEY G. WAUTERS, P.E.
TX LIC NO. 93889
11-01-22
DATE
SEE DISCLAIMER FOR LIMITATIONS OF USE.

CONTRACT DOCUMENTS DATED JUNE 10, 2022, AS PART OF THE BIDDING DOCUMENTS (DRAWINGS AND SPECIFICATIONS) AND SUBSEQUENTLY ISSUED ADDENDA HAVE BEEN MERGED INTO ONE CONFORMING SET OF DOCUMENTS FOR THE CONVENIENCE OF THE CONTRACTOR. IF INCONSISTENCIES OR AMBIGUITIES BETWEEN "CONFORMED" DOCUMENTS AND CONTRACT DOCUMENTS ARE FOUND, THE CONTRACT DOCUMENTS SHALL GOVERN.

REV	DATE	BY	DESCRIPTION
			CONFORMED DOCUMENTS

DESIGNED AW
DRAWN AW
CHECKED SGE
DATE FEBRUARY 2022

**
ORIGINAL
SEALED BY
CASEY G. WAUTERS, P.E.
2/28/2022
TX PE 93889
**

AECOM TECHNICAL SERVICES INC.
13640 BRIARWICK DRIVE, SUITE 200
AUSTIN, TEXAS 78729
WWW.AECOM.COM
TBPE REG. NO. F-3580

carollo
TBPE No. F-882

CITY OF AUSTIN
FOUNDED 1839

CITY OF AUSTIN
WILD HORSE RANCH WWTP EXPANSION
TYPICAL DETAILS
CIVIL TYPICAL DETAILS SHEET 3

VERIFY SCALES
BAR IS ONE INCH ON ORIGINAL DRAWING
0 1"
IF NOT ONE INCH ON THIS SHEET, ADJUST SCALES ACCORDINGLY

JOB NO. 10976A.10
DRAWING NO. 00TC03
SHEET NO. 29 OF 464

LAST SAVED BY: dsevert

PROJECT NO. 9585A10 FILE NAME: 9585A10_SheetSeed.dgn

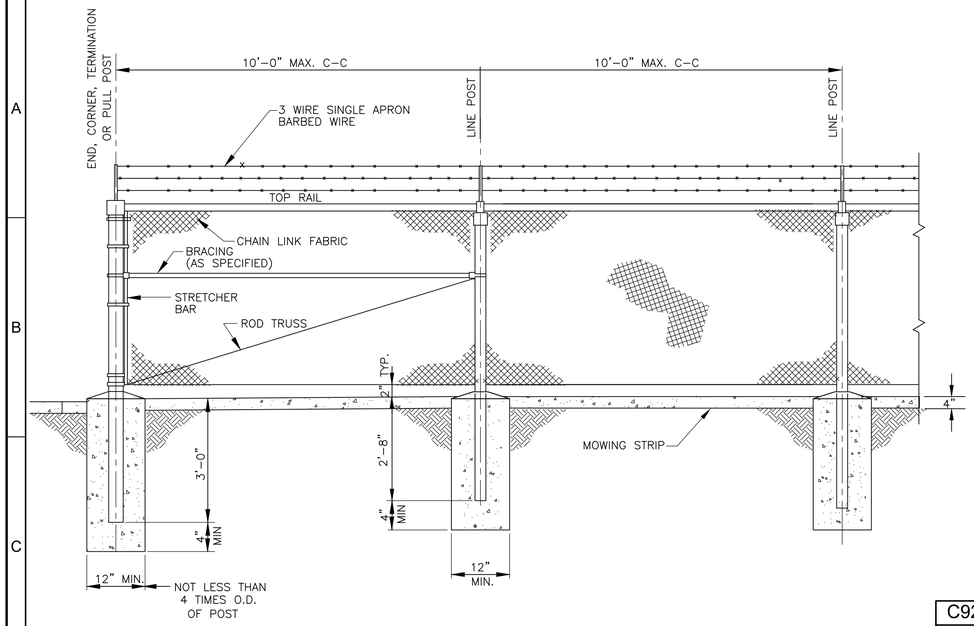

C920 TYP — CHAIN LINK FENCE DETAIL
NTS

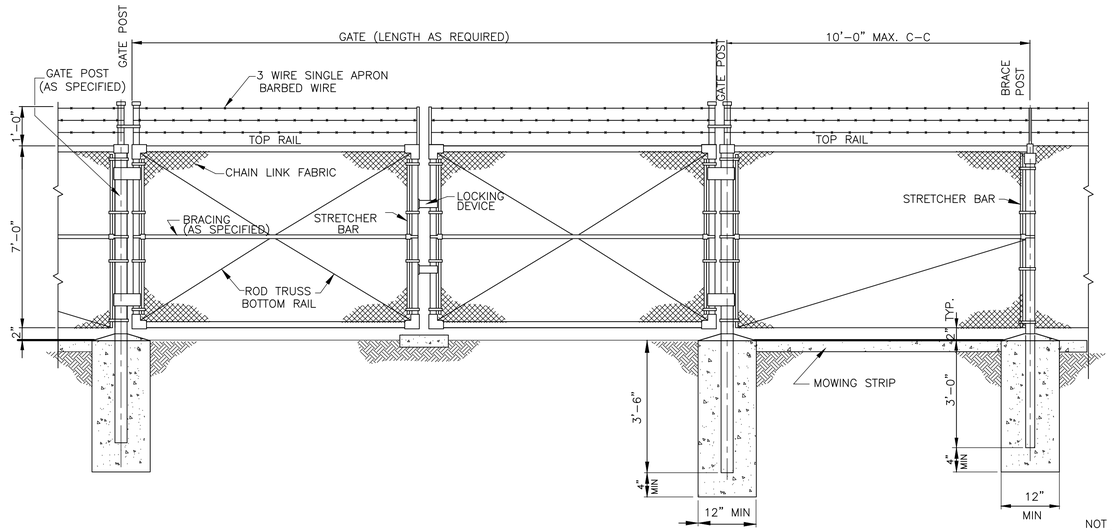

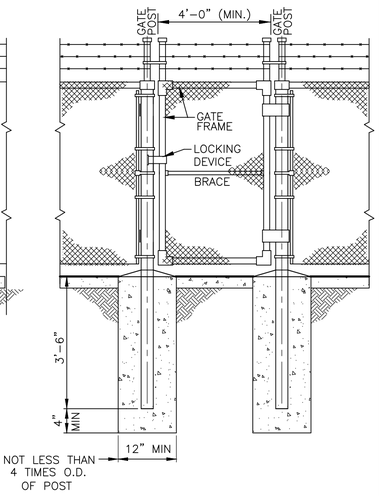

C921 TYP — WALK-THRU GATE DETAIL
NTS

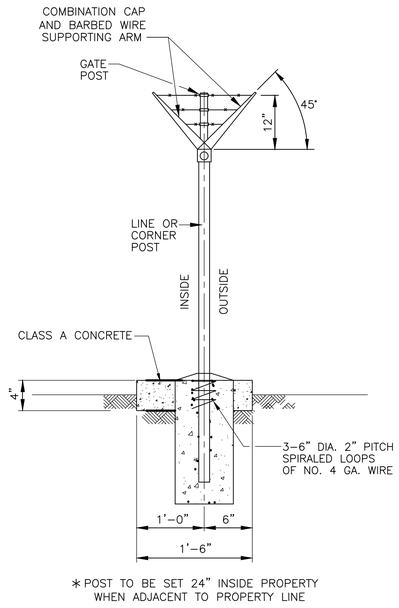

C922 TYP — FENCE POST DETAIL w/MOWING STRIP
NTS

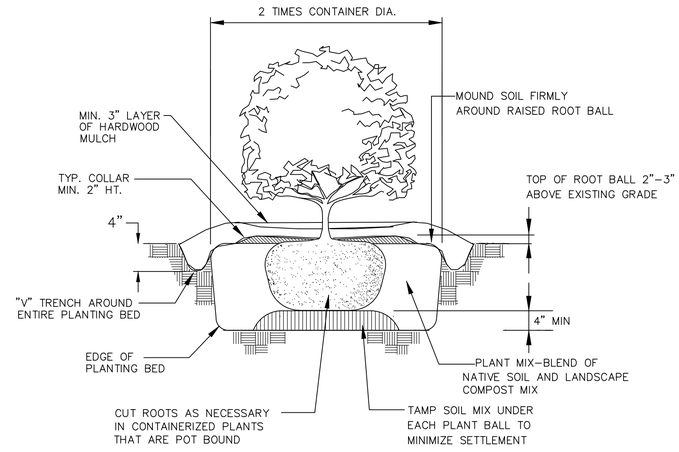

NOTES:

1. OMIT COLLAR AROUND EACH SHRUB WHEN IRRIGATION SYSTEM IS PRESENT
2. INSTALL TOP OF PLANT BALL 2"-3" ABOVE ADJACENT GRADE.
3. TAMP PLANTING MIX FIRMLY AS PIT IS FILLED AROUND EACH PLANT BALL.
4. SOAK EACH PLANT BALL AND PIT IMMEDIATELY AFTER INSTALLATION
5. SEE GROWER'S LITERATURE FOR OTHER PLANTING REQUIREMENTS.

C923 TYP — TYPICAL PLANTING BED STRIP
NTS

THIS CONFORMED DOCUMENT IS RELEASED FOR THE CONVENIENCE OF THE CONTRACTOR UNDER THE AUTHORITY OF:

CASEY G. WAUTERS, P.E. — 11-01-22
TX LIC NO. 93889 — DATE

SEE DISCLAIMER FOR LIMITATIONS OF USE.

CONTRACT DOCUMENTS DATED JUNE 10, 2022, AS PART OF THE BIDDING DOCUMENTS (DRAWINGS AND SPECIFICATIONS) AND SUBSEQUENTLY ISSUED ADDENDA HAVE BEEN MERGED INTO ONE CONFORMING SET OF DOCUMENTS FOR THE CONVENIENCE OF THE CONTRACTOR. IF INCONSISTENCIES OR AMBIGUITIES BETWEEN "CONFORMED" DOCUMENTS AND CONTRACT DOCUMENTS ARE FOUND, THE CONTRACT DOCUMENTS SHALL GOVERN.

REV	DATE	BY	DESCRIPTION
			CONFORMED DOCUMENTS

DESIGNED AW
DRAWN AW
CHECKED SGE
DATE FEBRUARY 2022

** ORIGINAL SEALED BY CASEY G. WAUTERS, P.E. 2/28/2022 TX PE 93889 **

AECOM TECHNICAL SERVICES INC.
13640 BRIARWICK DRIVE, SUITE 200
AUSTIN, TEXAS 78729
WWW.AECOM.COM
TBPE REG. NO. F-3580

carollo
TBPE No. F-882

CITY OF AUSTIN

CITY OF AUSTIN
WILD HORSE RANCH WWTP EXPANSION
TYPICAL DETAILS
CIVIL TYPICAL DETAILS SHEET 4

VERIFY SCALES
BAR IS ONE INCH ON ORIGINAL DRAWING
0 1"
IF NOT ONE INCH ON THIS SHEET, ADJUST SCALES ACCORDINGLY

JOB NO. 10976A.10
DRAWING NO. 00TC04
SHEET NO. 30 OF 464

LAST SAVED BY: dseivert

PROJECT NO. 9585A10 FILE NAME: 9585A10_SheetSeed.dgn

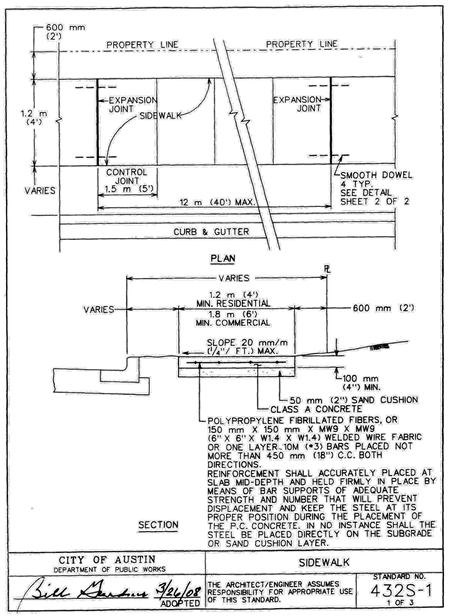

CITY OF AUSTIN DEPARTMENT OF PUBLIC WORKS	SIDEWALK	
Bill Gardner 3/26/08 ADOPTED	THE ARCHITECT/ENGINEER ASSUMES RESPONSIBILITY FOR APPROPRIATE USE OF THIS STANDARD.	STANDARD NO. 432S-1 1 OF 3

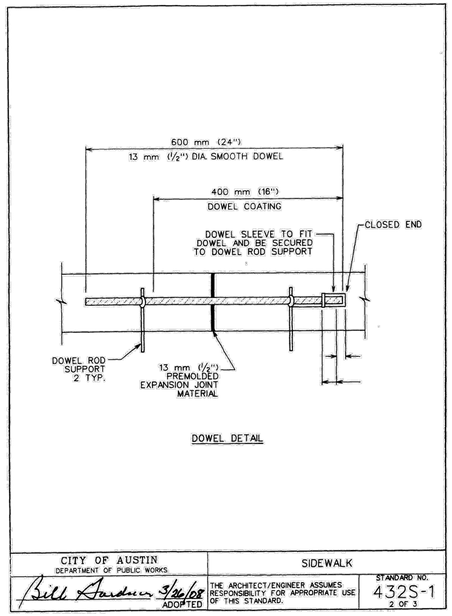

CITY OF AUSTIN DEPARTMENT OF PUBLIC WORKS	SIDEWALK	
Bill Gardner 3/26/08 ADOPTED	THE ARCHITECT/ENGINEER ASSUMES RESPONSIBILITY FOR APPROPRIATE USE OF THIS STANDARD.	STANDARD NO. 432S-1 2 OF 3

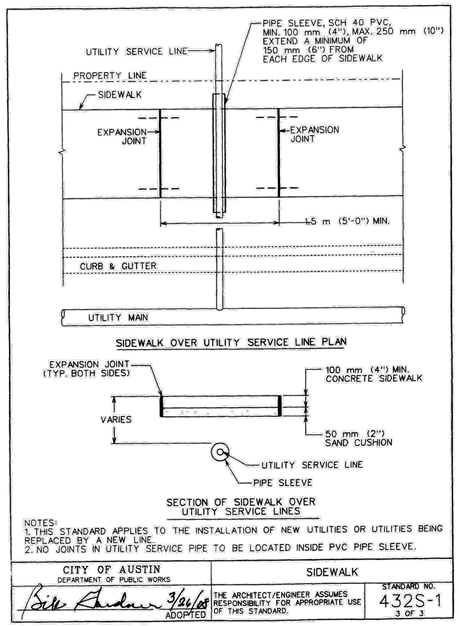

NOTES:
1. THIS STANDARD APPLIES TO THE INSTALLATION OF NEW UTILITIES OR UTILITIES BEING REPLACED BY A NEW LINE.
2. NO JOINTS IN UTILITY SERVICE PIPE TO BE LOCATED INSIDE PVC PIPE SLEEVE.

CITY OF AUSTIN DEPARTMENT OF PUBLIC WORKS	SIDEWALK	
Bill Gardner 3/26/08 ADOPTED	THE ARCHITECT/ENGINEER ASSUMES RESPONSIBILITY FOR APPROPRIATE USE OF THIS STANDARD.	STANDARD NO. 432S-1 3 OF 3

C924 TYP — SIDEWALK DETAILS
NTS

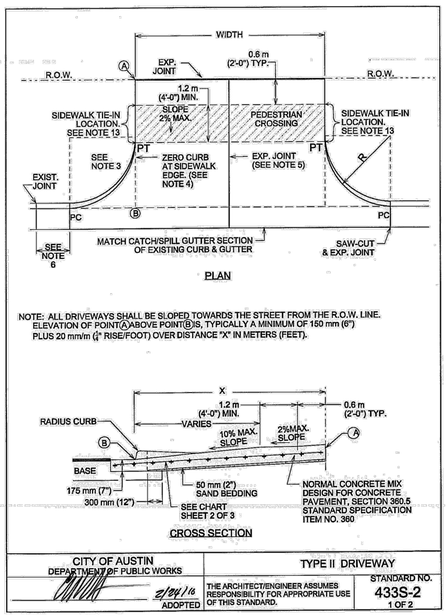

CITY OF AUSTIN DEPARTMENT OF PUBLIC WORKS	TYPE II DRIVEWAY	
2/24/16 ADOPTED	THE ARCHITECT/ENGINEER ASSUMES RESPONSIBILITY FOR APPROPRIATE USE OF THIS STANDARD.	STANDARD NO. 433S-2 1 OF 2

USE	THICKNESS	REINFORCEMENT
DRIVEWAYS FOR PASSENGER VEHICLE PARKING LOTS	150 mm (6") MIN.	125 mm (5") MIN. CONCRETE WITH ONE LAYER OF 13M (#4) BARS PLACED ON CHAIRS AT MIDDEPTH OF SLAB AT NO MORE THAN 450 mm (18") O.C. BOTH DIRECTIONS
ALL OTHERS	175 mm (7") MIN.	125 mm (5") MIN. CONCRETE WITH ONE LAYER OF 13M (#4) BARS PLACED ON CHAIRS AT MIDDEPTH OF SLAB AT NO MORE THAN 450 mm (18") O.C. BOTH DIRECTIONS

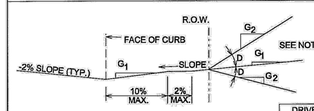

ALLOWABLE GRADES

DRIVEWAY VOLUME (ADT)	D=GRADE CHANGE STD.	MAX
>1500	0%	3%
500-1500	3%	6%
< 500	6%	15%

NOTES:
1. ALL TYPE II DRIVEWAYS SHALL HAVE RADIUS ENDS.
2. DRIVEWAY WIDTHS AND RADII DIMENSIONS, ONE/TWO WAY TRAVEL REQUIREMENTS, AND GEOMETRIC LAY-OUT ARE HIGHLY VARIABLE. SUBJECT TO SITE SPECIFIC CONDITIONS AND REQUIREMENTS. SEE TRANSPORTATION CRITERIA MANUAL, SECTION 5 "DRIVEWAYS".
3. THE DRIVEWAY EDGE SHALL BE SMOOTHLY TRANSITIONED INTO THE SIDEWALK TIE-IN LOCATION BEGINNING AT THE RADIUS PC LINE.
4. "ZERO" CURB AT PT OR SIDEWALK EDGE, WHICHEVER IS ENCOUNTERED FIRST.
5. PLACE AN EXPANSION JOINT DOWN THE CENTER OF DRIVEWAY ALL DRIVEWAYS.
6. IF DIMENSION IS LESS THAN 1.5 METERS (5 FEET), REMOVE CURB AND GUTTER TO EXISTING JOINT AND POUR MONOLITHICALLY WITH DRIVEWAY.
7. IF THE BASE IS OVER-EXCAVATED WHERE THE CURB AND GUTTER WERE REMOVED, BACKFILL WITH CONCRETE MONOLITHICALLY WITH THE DRIVEWAY.
8. TYPE II DRIVEWAYS ARE TO BE LOCATED NO CLOSER TO THE CORNER OF INTERSECTING RIGHT OF WAY THAN 60% OF PARCEL FRONTAGE AT 30 METERS (100 FEET); WHICHEVER IS LESS.
9. DRIVEWAY SHALL NOT BE CONSTRUCTED WITHIN THE CURB RETURN OF A STREET INTERSECTION.
10. WHILE THE PROPERTY OWNER REMAINS RESPONSIBLE FOR GRADE BREAKS WITHIN PRIVATE PROPERTY, THE FIRE DEPARTMENT SHALL BE CONSULTED WHERE THE DRIVEWAY IS ESSENTIAL TO EMERGENCY VEHICLE ACCESS AND "G2 IS GREATER THAN 15%.
11. USE 12 MM (1/2") ASPHALT BOARD OR OTHER APPROVED MATERIAL FOR CURB AND GUTTER EXPANSION JOINTS. SIDEWALK, AT THE R.O.W. LINE AND AT MIDWIDTH, SEE NOTE 5.
12. SEE TRANSPORTATION CRITERIA MANUAL, SECTION 5 FOR OTHER DRIVEWAY REQUIREMENTS.
13. THE SIDEWALK, REGARDLESS OF ITS LOCATION WITH RESPECT TO THE CURB OR PROPERTY LINE, SHALL BE CONNECTED TO THE DRIVEWAY AT THESE LOCATIONS.
14. WATER METER BOXES AND WASTEWATER CLEAN OUTS ARE PROHIBITED FROM BEING LOCATED IN DRIVEWAY AREAS.

CITY OF AUSTIN DEPARTMENT OF PUBLIC WORKS	TYPE II DRIVEWAY	
2/24/16 ADOPTED	THE ARCHITECT/ENGINEER ASSUMES RESPONSIBILITY FOR APPROPRIATE USE OF THIS STANDARD.	STANDARD NO. 433S-2 2 OF 2

C925 TYP — DRIVEWAY DETAILS
NTS

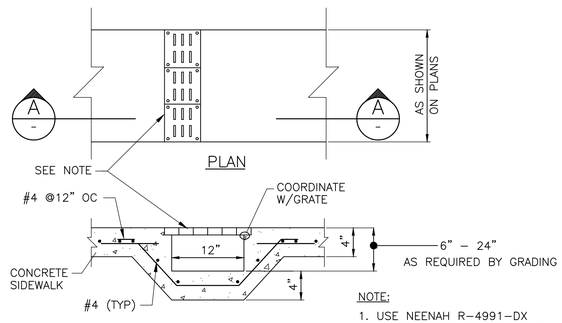

NOTE:
1. USE NEENAH R–4991–DX TYPE P GRATE IN SIDEWALKS.
2. TOP OF GRATE TO BE FLUSH W/TOP OF SIDEWALK.

C926 TYP — SIDEWALK TRENCH
NTS

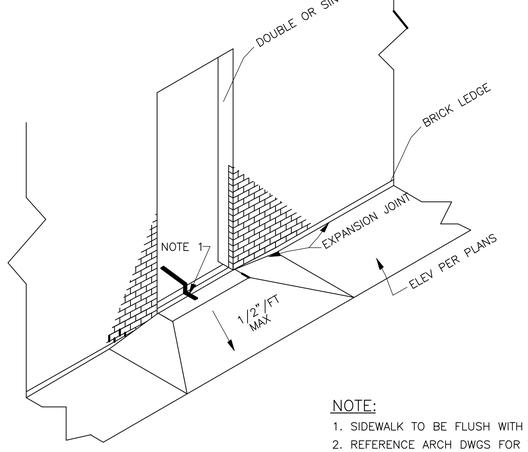

NOTE:
1. SIDEWALK TO BE FLUSH WITH THRESHOLD.
2. REFERENCE ARCH DWGS FOR THRESHOLD DETAIL.

C927 TYP — SIDEWALK AT DOOR DETAIL
NTS

THIS CONFORMED DOCUMENT IS RELEASED FOR THE CONVENIENCE OF THE CONTRACTOR UNDER THE AUTHORITY OF:

CASEY G. WAUTERS, P.E. 11-01-22
TX LIC NO. 93889 DATE

SEE DISCLAIMER FOR LIMITATIONS OF USE.

CONTRACT DOCUMENTS DATED JUNE 10, 2022, AS PART OF THE BIDDING DOCUMENTS (DRAWINGS AND SPECIFICATIONS) AND SUBSEQUENTLY ISSUED ADDENDA HAVE BEEN MERGED INTO ONE CONFORMING SET OF DOCUMENTS FOR THE CONVENIENCE OF THE CONTRACTOR. IF INCONSISTENCIES OR AMBIGUITIES BETWEEN "CONFORMED" DOCUMENTS AND CONTRACT DOCUMENTS ARE FOUND, THE CONTRACT DOCUMENTS SHALL GOVERN.

REV	DATE	BY	DESCRIPTION
			CONFORMED DOCUMENTS

DESIGNED AW
DRAWN AW
CHECKED SGE
DATE FEBRUARY 2022

** ORIGINAL SEALED BY CASEY G. WAUTERS, P.E. 2/28/2022 TX PE 93889 **

AECOM TECHNICAL SERVICES INC.
13640 BRIARWICK DRIVE, SUITE 200
AUSTIN, TEXAS 78729
WWW.AECOM.COM
TBPE REG. NO. F-3580

carollo® TBPE No. F-882

CITY OF AUSTIN — FOUNDED 1839

CITY OF AUSTIN

CITY OF AUSTIN
WILD HORSE RANCH WWTP EXPANSION
TYPICAL DETAILS
CIVIL TYPICAL DETAILS SHEET 5

VERIFY SCALES
BAR IS ONE INCH ON ORIGINAL DRAWING
0 1"
IF NOT ONE INCH ON THIS SHEET, ADJUST SCALES ACCORDINGLY

JOB NO. 10976A.10
DRAWING NO. 00TC05
SHEET NO. 31 OF 464

LAST SAVED BY: dseivert

PROJECT NO. 9585A10 FILE NAME: 9585A10_SheetSeed.dgn

NOTE:
OUT OF EXIST PIPELINE CUT ONLY THE LENGTH OF PIPE NECESSARY TO EQUAL OVERALL LENGTH OF FITTING TO BE INSERTED PLUS 10" FOR INSERTING CUTTING–IN SLEEVE.

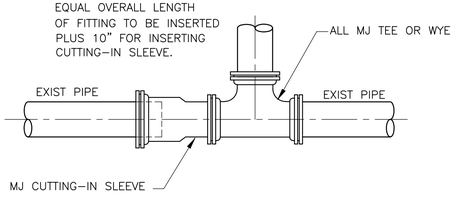

C930 TYP — CUTTING-IN SLEEVE DETAIL
NTS

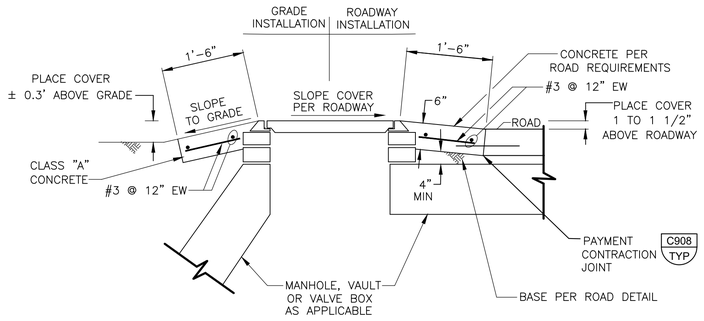

C931 TYP — CONCRETE PAD DETAIL
NTS

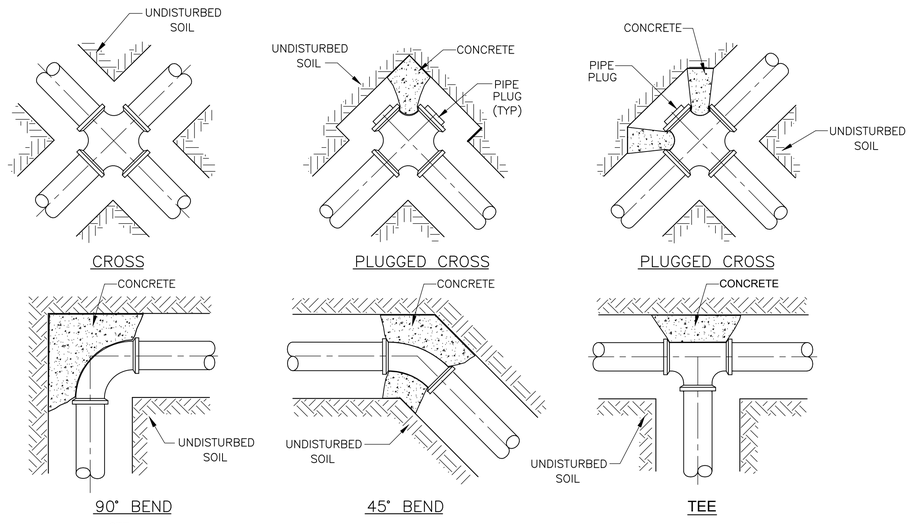

NOTE:
1. REFERENCE PIPING SCHEDULE AND SPECIFICATIONS FOR BEARING AREA REQUIREMENTS.

C932 TYP — TYPICAL THRUST BLOCK CONFIGURATION
NTS

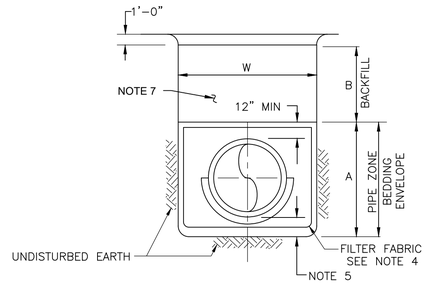

C933 TYP — TYPICAL BACKFILL FOR UNPAVED AREAS
NTS

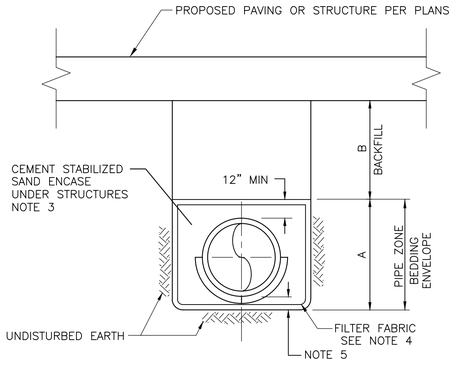

C934 TYP — TYPICAL BACKFILL FOR PAVED AREAS AND BELOW STRUCTURES
NTS

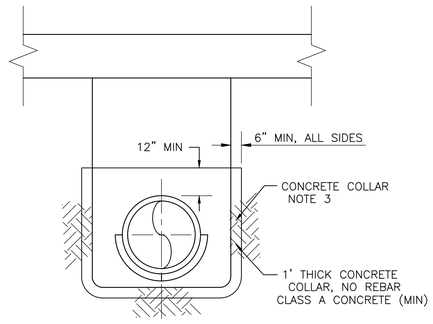

C935 TYP — CUT-OFF COLLAR
NTS

BEDDING & BACKFILL NOTES:

PIPE ZONE (A):

1. BEDDING MATERIAL FOR PIPES WITH I.D. LESS THAN 15" TO BE CLEAN, GRANULAR, AND HOMOGENEOUS SAND. MATERIAL TO BE COMPOSED MAINLY OF MINERAL MATTER, FREE OF MUD, SILT, CLAY LUMPS OR CLODS, VEGETATION OR DEBRIS. THE MATERIAL REMOVED BY DECANTATION TxDOT TEST METHOD TEX–406–A, PLUS THE WEIGHT OF ANY CLAY LUMPS, SHALL NOT EXCEED 4.5 PERCENT BY WEIGHT.

SIEVE SIZE	PERCENT PASSING BY WEIGHT
1/4 INCH	0
NO. 60	75 – 100
NO. 100	95 – 100

FOR PIPE SIZE HAVING AN INSIDE DIAMETER GRATER THAN 15 INCHES, THE BEDDING MATERIAL TO BE CLEAN, WASHED PEA GRAVEL, HARD AND INSOLUBLE IN WATER, FREE OF MUD, CLAY SILT VEGETATION OR OTHER DEBRIS. STONE QUALITY SHALL MEET ASTM C33. SIZE GRADATION SHALL BE AS FOLLOWS:

SIEVE SIZE	PERCENT RETAINED BY WEIGHT
3/4 INCH	0
1/2 INCH	0 – 25
1/4 INCH	90 – 100

2. BEDDING ENVELOPE TO BE PLACED IN 6 INCH LIFTS IN A DRY CONDITION AND VIBRATED IN PLACE WITH AT LEAST 4 OVERLAPPING PASSES TO A RELATIVE DENSITY OF 70%. MINIMUM DRY DENSITY TO BE DETERMINED USING ASTM D4254 TEST METHOD B. MAXMUM DRY DENSITY PER ASTM D4253, TEST METHOD 1A OR 2A. IF A VIBRATION TABLE IS NOT AVAILABLE, TXDOT TEST METHOD TEX–113–E CAN BE USED TO DETERMINE MAXIMUM DRY DENSITY IN LIEU OF ASTM D4253.

3. UNDER STRUCTURES, PIPE AND DUCTBANK TO BE ENCASED WITH CEMENT STABILIZED SAND. SAND ENCASEMENT TO BE STABILIZED WITH 2 SACKS OF CEMENTS PER YARD OF SAND FROM BATCH PLANT OR JOB–MIXED. ALL YARD DUCTBANK TO BE CEMENT STABILIZED SAND ENCASED DUCTBANK PER ELECTRICAL DETAILS. SAND ENCASEMENT MAY BE SUBSTITUTED WITH CONTROLLED LOW STRENGTH MATERIAL PER CITY SPECIFICATION ITEM 403S. AT EDGE OF STRUCTURE, SAND ENCASEMENT TO BE SEALED WITH A COLLAR PER DETAIL 5, THIS DRAWING.

4. FILTER FABRIC SURROUNDING THE BEDDING ENVELOPE WILL NOT BE REQUIRED IF THE PEA GRAVEL IS MIXED WITH A VOLUME OF SAND SUFFICIENT TO FILL THE VOIDS.

5. THE DEPTH OF THE GRANULAR EMBEDMENT BELOW THE OUTSIDE BOTTOM OF THE PIPE TO BE AS INDICATED BELOW:

PIPE SIZE	ON SOIL	ON ROCK
27" AND SMALLER	3"	6"
30" TO 60"	4"	9"
66" AND LARGER	6"	12"

BACKFILL (B):

6. BACKFILL FOR UNPAVED AREAS:
   A. EXCAVATED TRENCH MATERIAL, FREE OF DEBRIS AND CLAY LUMPS, MAY BE USED AS COMPACTED BACKFILL OVER ENVELOPES.
   B. COMPACT BACKFILL TO 95% OF THE MAXIMUM DRY DENSITY DETERMINED USING TXDOT TEST METHOD TEX–114–E OR ASTM D698, PROCEDURE A. COMPACTED LIFT THICKNESS SHOULD NOT BE MORE THAN 6 INCHES AND WATER CONTENTS OF THE COMPACTED BACKFILL SHOULD BE WITHIN ±2% OF OPTIMUM.

7. BACKFILL UNDER STRUCTURES TO CONFORM TO FOUNDATION REQUIREMENTS ON STRUCTURAL PLANS AND SPECIFICATIONS.

TRENCH WIDTHS (W):

8. THE MINIMUM TRENCH WIDTH (W) TO BE AS FOLLOWS:

PIPE LESS THAN 30–INCH	PIPE 31–INCH & LARGER
2'–0" + PIPE O.D. (MIN.)	3'–0" + PIPE O.D. (MIN.)

9. MAXIMUM TRENCH WIDTH IS UNLIMITED.

THIS CONFORMED DOCUMENT IS RELEASED FOR THE CONVENIENCE OF THE CONTRACTOR UNDER THE AUTHORITY OF:

CASEY G. WAUTERS, P.E. — 11-01-22
TX LIC NO. 93889 — DATE

SEE DISCLAIMER FOR LIMITATIONS OF USE.

CONTRACT DOCUMENTS DATED JUNE 10, 2022, AS PART OF THE BIDDING DOCUMENTS (DRAWINGS AND SPECIFICATIONS) AND SUBSEQUENTLY ISSUED ADDENDA HAVE BEEN MERGED INTO ONE CONFORMING SET OF DOCUMENTS FOR THE CONVENIENCE OF THE CONTRACTOR. IF INCONSISTENCIES OR AMBIGUITIES BETWEEN "CONFORMED" DOCUMENTS AND CONTRACT DOCUMENTS ARE FOUND, THE CONTRACT DOCUMENTS SHALL GOVERN.

REV	DATE	BY	DESCRIPTION
			CONFORMED DOCUMENTS

DESIGNED AW
DRAWN AW
CHECKED SGE
DATE FEBRUARY 2022

**
ORIGINAL SEALED BY
CASEY G. WAUTERS, P.E.
2/28/2022
TX PE 93889
**

AECOM TECHNICAL SERVICES INC.
13640 BRIARWICK DRIVE, SUITE 200
AUSTIN, TEXAS 78729
WWW.AECOM.COM
TBPE REG. NO. F-3580

carollo
TBPE No. F-882

CITY OF AUSTIN

CITY OF AUSTIN
WILD HORSE RANCH WWTP EXPANSION
TYPICAL DETAILS
CIVIL TYPICAL DETAILS
SHEET 6

VERIFY SCALES
BAR IS ONE INCH ON ORIGINAL DRAWING
0 — 1"
IF NOT ONE INCH ON THIS SHEET, ADJUST SCALES ACCORDINGLY

JOB NO. 10976A.10
DRAWING NO. 00TC06
SHEET NO. 32 OF 464

LAST SAVED BY: dseivert

PROJECT NO. 9585A10 FILE NAME: 9585A10_SheetSeed.dgn

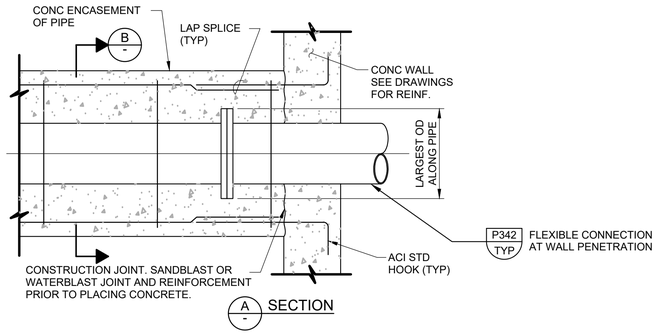

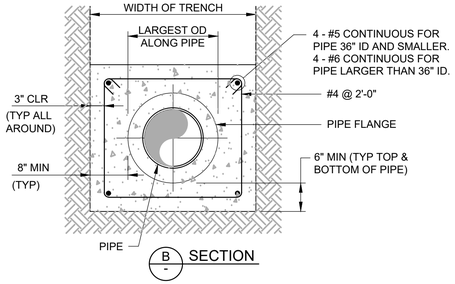

NOTES:

1. TYPE OF PIPE AND TYPE OF PIPE JOINT OR COUPLER AS INDICATED ON THE DRAWINGS.
2. WHERE THE PIPE AND ENCASEMENT EXTENDS OUT FROM UNDER A STRUCTURE, THE BOTTOM EDGE OF THE END OF THE ENCASEMENT SHOULD LIE OUTSIDE A 1 TO 1 LINE DOWN FROM THE BOTTOM EDGE OF THE FOUNDATION.

C936 TYP — CONCRETE ENCASEMENT OF PIPE

NTS

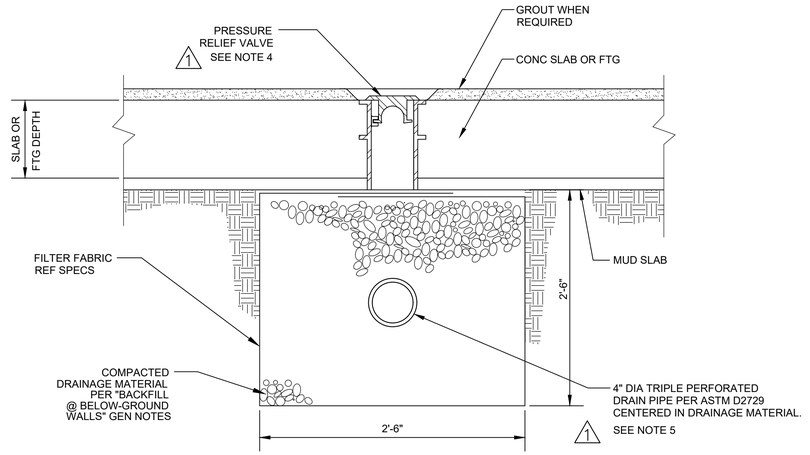

NOTES:

1. PRESSURE RELIEF VALVE MUST BE INSTALLED IN A VERTICAL POSITION. DO NOT INSTALL PERPENDICULAR TO SLOPE OF SLAB.
2. WHERE SLAB OR FTG DEPTH PLUS MUDSLAB DEPTH EXCEEDS MAXIMUM AVAILABLE VALVE LENGTH, PROVIDE A DUCTILE IRON MJ x PE PIPE EXTENSION.
3. REFERENCE PLANS FOR PRV LOCATIONS.
4. (1) PRESSURE RELIEF VALVE SHALL BE 4" DIAMETER WITH A 316 STAINLESS STEEL BODY AND BE FURNISHED WITH AN INTERNAL GRATE. OPERATING HEAD SHALL BE APPROXIMATELY 9 INCHES OF WATER. MANUFACTURER SHALL BE TROY VALVE OR APPROVED EQUAL.
5. PERFORATE DRAIN PIPE AT 0°, 120°, AND 240° AROUND PERIMETER OF PIPE. 0° IS AT TOP OF PIPE. PERFORATIONS SHALL BE 3/8 INCH DIAMETER.

C938 TYP — FLOOR TYPE PRESSURE RELIEF VALVE

NTS

THIS CONFORMED DOCUMENT IS RELEASED FOR THE CONVENIENCE OF THE CONTRACTOR UNDER THE AUTHORITY OF:

CASEY G. WAUTERS, P.E. — 11-01-22 DATE
TX LIC NO. 93889

SEE DISCLAIMER FOR LIMITATIONS OF USE.

CONTRACT DOCUMENTS DATED JUNE 10, 2022, AS PART OF THE BIDDING DOCUMENTS (DRAWINGS AND SPECIFICATIONS) AND SUBSEQUENTLY ISSUED ADDENDA HAVE BEEN MERGED INTO ONE CONFORMING SET OF DOCUMENTS FOR THE CONVENIENCE OF THE CONTRACTOR. IF INCONSISTENCIES OR AMBIGUITIES BETWEEN "CONFORMED" DOCUMENTS AND CONTRACT DOCUMENTS ARE FOUND, THE CONTRACT DOCUMENTS SHALL GOVERN.

REV	DATE	BY	DESCRIPTION
1	09/07/22	CW	ADDENDUM No. 5

CONFORMED DOCUMENTS

DESIGNED AW
DRAWN AW
CHECKED SGE
DATE SEPTEMBER 2022

**
ORIGINAL SEALED BY CASEY G. WAUTERS, P.E.
9/7/2022
TX PE 93889
**

AECOM TECHNICAL SERVICES INC.
13640 BRIARWICK DRIVE, SUITE 200
AUSTIN, TEXAS 78729
WWW.AECOM.COM
TBPE REG. NO. F-3580

TBPE No. F-882

CITY OF AUSTIN

CITY OF AUSTIN
WILD HORSE RANCH WWTP EXPANSION
TYPICAL DETAILS
CIVIL TYPICAL DETAILS SHEET 7

VERIFY SCALES
BAR IS ONE INCH ON ORIGINAL DRAWING
0 — 1"
IF NOT ONE INCH ON THIS SHEET, ADJUST SCALES ACCORDINGLY

JOB NO. 10976A.10
DRAWING NO. 00TC07
SHEET NO. 33 OF 464

LAST SAVED BY: dseivert

PROJECT NO. 9585A10 FILE NAME: 9585A10_SheetSeed.dgn

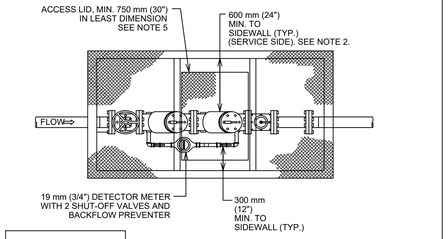

NOTES:

1. ALL BACKFLOW PREVENTION ASSEMBLIES SHALL HAVE LAB AND FIELD APPROVAL FROM THE UNIVERSITY OF SOUTHERN CALIFORNIA FOUNDATION FOR CROSS CONNECTION CONTROL AND HYDRAULIC RESEARCH.
2. ALL TEST PORTS SHALL BE DIRECTED UPWARD AND PLUGGED. TEST PORTS ARE LOCATED ON SERVICE SIDE. PLUGS SHALL BE NON-FERROUS.
3. BACKFLOW PREVENTION ASSEMBLIES SHALL BE INSTALLED IN THE UPRIGHT HORIZONTAL POSITION, UNLESS OTHERWISE APPROVED. BACKFLOW PREVENTION ASSEMBLIES SHALL NOT BE ROTATED ON THEIR AXIS.
4. CLEARANCE SHALL BE AS INDICATED,AND IN THE STANDARD CROSS CONNECTION ORDINANCES AND UCM.
5. ACCESS OPENING MUST BE LARGE ENOUGH TO REMOVE LARGEST PORTION OF BACKFLOW PREVENTER, BUT NOT LESS THAN 750 mm (30") IN LEAST DIMENSION.
6. TEST AND MAINTENANCE REPORT SHALL BE RECEIVED BY AUSTIN WATER UTILITY'S SPECIAL SERVICE DIVISION WITHIN 5 DAYS AFTER BEING INSTALLED.
7. VAULT SHALL NOT BE INSTALLED IN TRAFFIC AREA.
8. VAULT DEPTH MAY NOT EXCEED 1.8m (72"), BOTTOM OF LID TO TOP OF FLOOR.
9. HAND WHEELS SHALL BE HORIZONTALLY LOCATED WITHIN 300mm (12") OF ACCESS OPENING.
10. FOR ACCESS DOORS SEE SPL WW-614 OR APPROVED EQUAL (H20 LOADING REQUIRED).
11. FOR VAULT SEE SPL WW-298 OR APPROVED EQUAL (H20 LOADING REQUIRED).
12. VAULT PIPE WALL VOIDS SHALL BE SEALED WITH NON-SHRINK GROUT OR SEALANT PER SPL WW-146A OR APPROVED EQUAL.
13. THE TOP OF THE METER VAULT SHALL BE AT AN ELEVATION SUCH THAT THE SURROUNDING GROUND SLOPES AWAY FROM THE VAULT. ADDITIONAL DRAINAGE CONSIDERATION SUCH AS CONNECTION OF VAULT TO STORM SEWER, LATERAL DRAIN LINES FROM GRAVEL BED OR OTHER MEANS SHALL BE REQUIRED IF CONDITIONS CAUSE WATER TO COLLECT IN VAULT.

CITY OF AUSTIN WATER AND WASTEWATER UTILITY	STANDARD FIRE LINE INSTALLATION WITHOUT MASTER METER	
RECORD COPY SIGNED BY KATHI L FLOWERS 08/31/2011	THE ARCHITECT/ENGINEER ASSUMES RESPONSIBILITY FOR APPROPRIATE USE OF THIS STANDARD.	STANDARD NO. 520S-19C 1 OF 2

CITY OF AUSTIN WATER AND WASTEWATER UTILITY	STANDARD FIRE LINE INSTALLATION WITHOUT MASTER METER	
RECORD COPY SIGNED BY KATHI L FLOWERS 08/31/2011	THE ARCHITECT/ENGINEER ASSUMES RESPONSIBILITY FOR APPROPRIATE USE OF THIS STANDARD.	STANDARD NO. 520S-19C 2 OF 2

C940 TYP — BACKFLOW PREVENTER
NTS

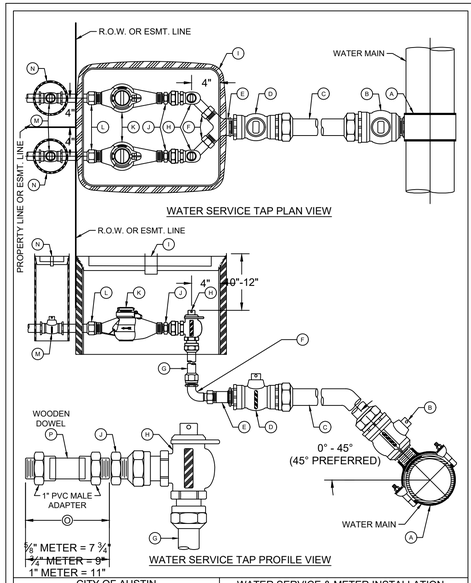

MATERIALS LIST:

A. 2" SERVICE CLAMP, SPL WW-264
B. 2" CORPORATION STOP, SPL WW-68
C. 2" HDPE WATER SERVICE TUBING, SPL WW-65
D. 2" BALL VALVE, SPL WW-68
E. SINGLE SERVICE: 2" MIP X 1" COPPER FLARE FITTING, SPL WW-68 OR DOUBLE SERVICE: 2" MIP X 1" COPPER FLARE WYE, SPL WW-68
F. 1" SWIVEL NUT x 1" COMPRESSION 90° BEND, SPL WW-68
G. 1" HDPE WATER SERVICE TUBING, SPL WW-65
H. 1" ANGLE METER STOP, SPL WW-68
I. METER BOX AND LID, SPL WW-145A; FOR DUAL 1" METERS: USE TWO SINGLE METER BOXES

MATERIALS TO BE INSTALLED BY PLUMBER:

J. BRASS METER BUSHING - SIZE AS NEEDED TO CONNECT ANGLE METER STOP TO METER
K. WATER METER PURCHASED FROM AUSTIN WATER
L. BRASS WATER METER COUPLING MALE IPT x SWIVEL COUPLING NUT:
⅝" AND ¾" METERS: 8 ½" LONG x ¾" DIA.
1" METERS: 8 ½" LONG x 1" DIA.
M. PROPERTY OWNER'S CUT OFF VALVE, SPL WW-276
N. PROPERTY OWNER'S CUT OFF VALVE BOX AND LID
O. TEMPORARY METER SPACER (REQUIRED TO ASSURE METER WILL FIT APPROPRIATELY)
P. 1" WOODEN DOWEL (SHOW ADDRESS ON DOWEL USING WATERPROOF MARKER)

NOTES:

1. SERVICE CLAMP SHALL BE WRAPPED COMPLETELY WITH 8 MIL. POLYETHYLENE FILM, SPL WW-27D.
2. BRANCH CONNECTIONS AND ALL ANGLE METER STOPS MUST BE INSTALLED PRIOR TO ANY METER INSTALLATION.
3. TOP OF METER BOXES SHOULD BE 4" ABOVE GROUND.
4. PIPING AND TUBING IN STREET RIGHT-OF-WAY SHALL BE BEDDED IN GRANULAR MATERIALS AS REQUIRED BY SECTION 510.3 (14) OF THE CITY OF AUSTIN STANDARD SPECIFICATIONS; BACKFILL ABOVE GRANULAR BEDDING AS REQUIRED BY SECTION 510.3 (25).
5. METER BOX MUST BE BEHIND CURB NEXT TO PROPERTY LINE OR EASEMENT AND OUT OF VEHICULAR TRAFFIC AREA AND SIDEWALK.
6. BALL VALVE "D" SHALL NOT BE LOCATED UNDER SIDEWALK, CURB, OR PAVEMENT, AND NOT BE LOCATED MORE THAN 36" BELOW FINAL GRADE.
7. METER SIZES TO BE SHOWN ON PLANS.
8. METER BOX CUT OUTS SHALL NOT EXCEED TWO TIMES THE PIPE DIAMETER.
9. INSTALL METALLIC TRACER TAPE, SPL WW-597, MINIMUM 1" ABOVE TUBING FROM SERVICE CLAMP "A" TO BALL VALVE "D".
10. TUBING SHALL BE PLACED IN A STRAIGHT ALIGNMENT AND ALLOWED TO RELAX AND "SNAKE" LOOSELY IN THE TRENCH. TUBING BEHIND CURB AND GUTTER SHALL BE INSTALLED WITH A MINIMUM 2' DEPTH OF COVER.
11. 1" TUBING, WHEN BENT, SHALL HAVE A RADIUS NO SMALLER THAN 3'. 2" TUBING, WHEN BENT, SHALL HAVE A RADIUS NO SMALLER THAN 5'. BRASS FITTINGS SHALL NOT BE CONNECTED TO A BENT SECTION OF TUBING.
12. SOLID, TUBULAR STAINLESS STEEL INSERT STIFFENERS FOR HDPE TUBING SHALL BE USED AT ALL COMPRESSION FITTINGS. INSERT STIFFENERS SHALL BE FROM THE SAME MANUFACTURER AS THE COMPRESSION FITTING USED.
13. FOR RECLAIMED WATER SERVICES AND METERS, ALL RECLAIMED TUBING SHALL BE MANUFACTURED SOLID PURPLE, SPL WW-65A. ALL APPURTENANCES SHALL BE MANUFACTURED PURPLE IF AVAILABLE. ALL FITTINGS THAT ARE NOT AVAILABLE FROM THE MANUFACTURER IN PURPLE SHALL BE PAINTED PURPLE IF AVAILABLE. ALL FITTINGS SHALL BE PURPLE AND HAVE "**RECLAIMED WATER**" CAST INTO THEM, SPL WW-145A.

CITY OF AUSTIN AUSTIN WATER	WATER SERVICE & METER INSTALLATION - 1" & SMALLER METERS	
JEFF A. KYLE *08/16/2019* ADOPTED	THE ARCHITECT/ENGINEER ASSUMES RESPONSIBILITY FOR APPROPRIATE USE OF THIS STANDARD.	STANDARD NO. 520-AW-01B 1 OF 2

CITY OF AUSTIN AUSTIN WATER	WATER SERVICE & METER INSTALLATION - 1" & SMALLER METERS	
JEFF A. KYLE *08/16/2019* ADOPTED	THE ARCHITECT/ENGINEER ASSUMES RESPONSIBILITY FOR APPROPRIATE USE OF THIS STANDARD.	STANDARD NO. 520-AW-01B 2 OF 2

C943 TYP — WATER SERVICE & METER INSTALLATION 1" & SMALLER METERES
NTS

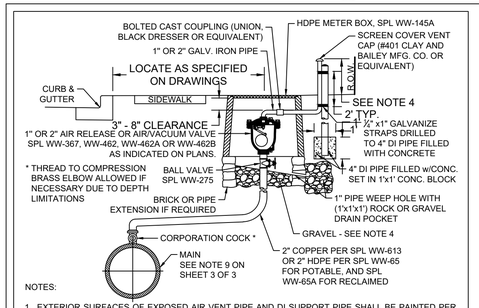

NOTES:

1. EXTERIOR SURFACES OF EXPOSED AIR VENT PIPE AND DI SUPPORT PIPE SHALL BE PAINTED PER SPL WW-3C. POTABLE WATER PIPE SHALL BE PAINTED SAFETY BLUE.
2. AIR VENT PIPE INSTALLATION SHALL BE AS NEAR AS PRACTICAL TO RIGHT-OF-WAY LINE WITH MINIMUM CLEARANCE OF 18" FROM ANY OBSTACLE.
3. HDPE METER BOX PENETRATION SHALL BE CORE BIT DRILLED. VOID SHALL BE FILLED WITH LINKSEAL LS 300 OR APPROVED EQUAL.
4. COMPACTED COARSE GRAVEL OR BROKEN STONE MIXED WITH SAND SLOPED TO DRAIN.
5. IN UNDEVELOPED AREAS, THE AIR VENT PIPE SHALL BE 4' MIN. IN HEIGHT SUPPORTED BY A 4" DIA. DI PIPE WHICH HAS BEEN FILLED WITH CONCRETE (SUPPORT PIPE SHALL BE 6' LONG, BURIED IN CLASS A CONCRETE OR CLSM 3' BELOW FINAL GRADE AND EXTENDING 3' ABOVE FINAL GRADE). INSTALL ONE DELINEATOR STAKE WITHIN 3' OF THE VAULT ON THE VEHICULAR ACCESS SIDE OF VAULT OR AS DIRECTED BY AUSTIN WATER. DELINEATOR SHALL BE BLUE FOR POTABLE WATER AND SHALL EXTEND AT LEAST 60" ABOVE GROUND. DELINEATORS SHALL HAVE 2" WIDE, WHITE IN COLOR, TYPE I REFLECTIVE TAPE MOUNTED DIAGONALLY AT 12" SPACING ON BOTH SIDES. IN DEVELOPED AREAS, THE AIR VENT PIPE SHALL BE 8' - 12' IN HEIGHT AND LOCATED NOT TO CONFLICT WITH SIDEWALK, DRIVEWAY, OR OTHER PEDESTRIAN TRAFFIC.
6. THE AIR VALVE AND ASSOCIATED PIPING SHALL BE INSTALLED ABOVE THE HIGHEST ELEVATION OF THE WATER MAIN. AIR VALVE PIPING, FROM THE WATER MAIN TO THE AIR VALVE, SHALL MAINTAIN A CONSTANT RISE, WITH NO DIPS, TO THE TOP OF THE GROUND.

1" - 2" AIR RELEASE OR AIR/VACUUM VALVE INSTALLATION - TYPE I

RECLAIMED WATER: ALL RECLAIMED PVC PIPE SHALL BE MANUFACTURED PURPLE PIPE. HDPE PIPE SHALL BE MANUFACTURED WITH PURPLE STRIPES. ALL OTHER PIPE AND APPURTENANCES SHALL BE MANUFACTURED PURPLE IF AVAILABLE. ALL PIPE AND FITTINGS THAT ARE NOT AVAILABLE FROM THE MANUFACTURER IN PURPLE SHALL BE PAINTED PURPLE PER SPL WW-3C. ALL BURIED DI AND CI PIPE AND FITTINGS SHALL ALSO BE WRAPPED IN PURPLE POLYETHYLENE PER SPL WW-27D. ALL COVERS SHALL HAVE **"RECLAIMED WATER"** CAST INTO THEM.

CITY OF AUSTIN AUSTIN WATER	AIR RELEASE AND AIR/VACUUM VALVE	
RECORD COPY SIGNED BY KATHI L FLOWERS *05/18/2016* ADOPTED	THE ARCHITECT/ENGINEER ASSUMES RESPONSIBILITY FOR APPROPRIATE USE OF THIS STANDARD.	STANDARD NO. 511-AW-04 1 OF 3

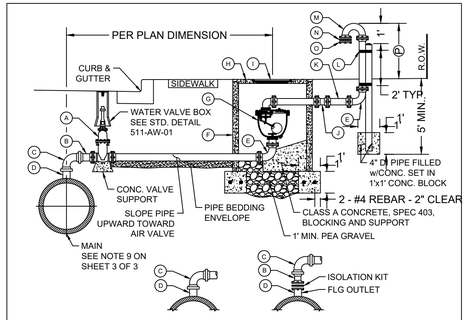

A. GATE VALVE (FLG x FLG). GATE VALVE SHALL NOT BE INSTALLED DIRECTLY ABOVE WATER MAIN.
B. PIPE FLG x FACTORY RESTRAINED JOINT SPIGOT END.
C. 90° BEND w/FACTORY RESTRAINED JOINT BELL ENDS, SPL WW-27F.
D. FOR DI MAIN: WELDED-ON OUTLET w/FACTORY RESTRAINED JOINT SPIGOT END.
FOR STEEL/CSC MAIN: WELDED-ON FLANGED OUTLET w/ISOLATION KIT AND FLG x FACTORY RESTRAINED SPIGOT END.
E. 90° BEND (FLG x FLG).
F. CLASS III RCP VAULT 60" MIN. I.D.
G. AIR RELEASE VALVE w/GOOSENECK PER AIR RELEASE VALVES FOR WATER SPL WW-367 OR AIR RELEASE/VACUUM RELIEF VALVES FOR POTABLE WATER SPL WW-462A OR AIR RELEASE/VACUUM RELIEF VALVES FOR RECLAIMED WATER SPL WW-462B OR AIR RELEASE/AIR VACUUM VALVE FOR WASTEWATER SPL WW-462B.
H. REINFORCED PRECAST CONCRETE LID (AASHTO H-20 LOADING).
I. COA FRAME AND 32" COVER WITH LETTERING MODIFIED FOR WATER.
J. BOLTED CAST COUPLING (SMITH-BLAIR 441 OMNI CAST COUPLING OR APPROVED EQUAL).
K. AIR VENT PIPE, 3" PIPE - GALVANIZED IRON, 4" AND LARGER PIPE - DI ONLY.
L. ½" x1" GALVANIZE STRAPS DRILLED TO 4" DI PIPE FILLED w/CONCRETE (SEE NOTE 7).
M. RETURN BEND (FLG x FLG).
N. No. 16 MESH BRASS CLOTH
O. COMPANION FLANGE (SEE NOTE 5).
P. 4' MIN. - UNDEVELOPED AREAS.

3" OR LARGER AIR/VACUUM VALVE INSTALLATION - TYPE II

CITY OF AUSTIN AUSTIN WATER	AIR RELEASE AND AIR/VACUUM VALVE	
RECORD COPY SIGNED BY KATHI L FLOWERS *05/18/2016* ADOPTED	THE ARCHITECT/ENGINEER ASSUMES RESPONSIBILITY FOR APPROPRIATE USE OF THIS STANDARD.	STANDARD NO. 511-AW-04 2 OF 3

NOTES:

1. ON 10" AND LARGER TWO PIECE COMBINATION AIR VALVES, THE OUTLET PIPING OF THE SMALL VALVE SHALL BE VENTED WITHIN THE VAULT INTO THE LARGER VENT PIPE
2. AIR VENT PIPE 6" AND LARGER SHALL BE DI (CLASS 350 MIN.) PIPE FLANGE FITTINGS AND EXTERIOR SURFACES OF ALL EXPOSED PIPE SHALL BE PAINTED PER SPL WW-3C. POTABLE WATER PIPE SHALL BE PAINTED SAFETY BLUE. SURFACE PREPARATION SHALL BE PER PAINT MANUFACTURER'S REQUIREMENTS.
3. ENTIRE AIR VENT ASSEMBLY SHALL BE LOCATED WITHIN EASEMENT OR R.O.W.
4. CONCRETE PIPE PENETRATIONS SHALL BE CORE BIT DRILLED. VOID SHALL BE SEALED w/LINKSEAL LS 300 OR APPROVED EQUAL.
5. CROSS SECTIONAL AREA OF OPENING TO BE EQUAL TO OR GREATER THAN CROSS SECTIONAL AREA OF AIR VENT PIPE.
6. AIR/VACUUM VALVE SHALL BE INSTALLED IN A MANNER WHICH WILL ALLOW REMOVAL OF ASSEMBLY WITHOUT REMOVAL OF PRECAST CONCRETE LID.
7. IN UNDEVELOPED AREAS, THE AIR VENT PIPE SHALL BE 4' MIN. IN HEIGHT SUPPORTED BY A 4" DIA. DI PIPE WHICH HAS BEEN FILLED WITH CONCRETE (SUPPORT PIPE SHALL BE 6' LONG, BURIED IN CLASS A CONCRETE OR CLSM 3' BELOW FINAL GRADE AND EXTENDING 3' ABOVE FINAL GRADE). INSTALL ONE DELINEATOR STAKE WITHIN 3' OF THE VAULT ON THE VEHICULAR ACCESS SIDE OF VAULT OR AS DIRECTED BY AUSTIN WATER. DELINEATOR SHALL BE BLUE FOR POTABLE WATER AND SHALL EXTEND AT LEAST 60" ABOVE GROUND. DELINEATORS SHALL HAVE 2" WIDE, WHITE IN COLOR, TYPE I REFLECTIVE TAPE MOUNTED DIAGONALLY AT 12" SPACING ON BOTH SIDES. IN DEVELOPED AREAS, THE AIR VENT PIPE SHALL BE LOCATED NOT TO CONFLICT WITH SIDEWALK, DRIVEWAY, OR OTHER PEDESTRIAN TRAFFIC.
8. GATE VALVE, PIPE, AND FITTINGS FROM MAIN TO ARV SHALL BE OF EQUAL DIAMETER AS THE AIR VALVE EXCEPT 3" ARV SHALL HAVE 4" FITTINGS AND A 4"x3" REDUCER AT THE ARV, AND ALL PIPE AND FITTINGS ON THE OUTLET SIDE OF THE ARV SHALL BE EQUAL TO THE SIZE OF THE OUTLET OF THE ARV. VAULTS SHALL BE 5' DIAMETER FOR 3" VALVE; 6' DIAMETER FOR 4", 6", AND 8" VALVES; AND 7' DIAMETER FOR 10" AND 12" VALVES.
9. FOR 24" AND LARGER MAINS, AN 18" OUTLET WITH BLIND FLANGE SHALL BE INSTALLED AT CONNECTION OF ARV.

3" OR LARGER AIR/VACUUM VALVE INSTALLATION - TYPE II

RECLAIMED WATER: ALL RECLAIMED PVC PIPE SHALL BE MANUFACTURED PURPLE PIPE. HDPE PIPE SHALL BE MANUFACTURED WITH PURPLE STRIPES. ALL OTHER PIPE AND APPURTENANCES SHALL BE MANUFACTURED PURPLE IF AVAILABLE. ALL PIPE AND FITTINGS THAT ARE NOT AVAILABLE FROM THE MANUFACTURER IN PURPLE SHALL BE PAINTED PURPLE PER SPL WW-3C. ALL BURIED DI AND CI PIPE AND FITTINGS SHALL ALSO BE WRAPPED IN PURPLE POLYETHYLENE PER SPL WW-27D. ALL COVERS SHALL HAVE **"RECLAIMED WATER"** CAST INTO THEM.

CITY OF AUSTIN AUSTIN WATER	AIR RELEASE AND AIR/VACUUM VALVE	
RECORD COPY SIGNED BY KATHI L FLOWERS *05/18/2016* ADOPTED	THE ARCHITECT/ENGINEER ASSUMES RESPONSIBILITY FOR APPROPRIATE USE OF THIS STANDARD.	STANDARD NO. 511-AW-04 3 OF 3

C942 TYP — COMBINATION AIR/VACUUM RELEASE VALVE
NTS

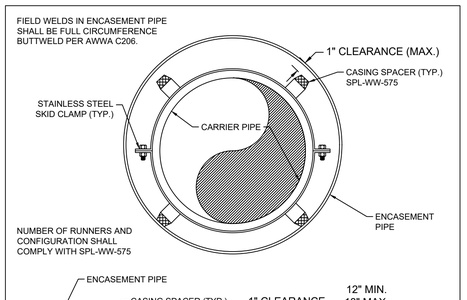

APPLICABLE REFERENCES:
STANDARD SPECIFICATION: ITEM 505.4 & 510.3 (19)

CITY OF AUSTIN AUSTIN WATER	ENCASEMENT PIPE DETAIL WITH CASING SPACERS	
RECORD COPY SIGNED JEFF A. KYLE *02/22/2021* ADOPTED	THE ARCHITECT/ENGINEER ASSUMES RESPONSIBILITY FOR APPROPRIATE USE OF THIS STANDARD.	STANDARD NO. 501-AW-01 1 OF 1

C944 TYP — ENCASEMENT PIPE DETAIL w/ CASING SPACERS
NTS

THIS CONFORMED DOCUMENT IS RELEASED FOR THE CONVENIENCE OF THE CONTRACTOR UNDER THE AUTHORITY OF:
CASEY G. WAUTERS, P.E.
TX LIC NO. 93889
11-01-22
DATE
SEE DISCLAIMER FOR LIMITATIONS OF USE.

CONTRACT DOCUMENTS DATED JUNE 10, 2022, AS PART OF THE BIDDING DOCUMENTS (DRAWINGS AND SPECIFICATIONS) AND SUBSEQUENTLY ISSUED ADDENDA HAVE BEEN MERGED INTO ONE CONFORMING SET OF DOCUMENTS FOR THE CONVENIENCE OF THE CONTRACTOR. IF INCONSISTENCIES OR AMBIGUITIES BETWEEN "CONFORMED" DOCUMENTS AND CONTRACT DOCUMENTS ARE FOUND, THE CONTRACT DOCUMENTS SHALL GOVERN.

REV	DATE	BY	DESCRIPTION
			CONFORMED DOCUMENTS

DESIGNED AW
DRAWN AW
CHECKED SGE
DATE FEBRUARY 2022

** ORIGINAL SEALED BY CASEY G. WAUTERS, P.E. 2/28/2022 TX PE 93889 **

AECOM TECHNICAL SERVICES INC.
13640 BRIARWICK DRIVE, SUITE 200
AUSTIN, TEXAS 78729
WWW.AECOM.COM
TBPE REG. NO. F-3580

carollo
TBPE No. F-882

CITY OF AUSTIN
FOUNDED 1839

CITY OF AUSTIN

CITY OF AUSTIN
WILD HORSE RANCH WWTP EXPANSION
TYPICAL DETAILS
CIVIL TYPICAL DETAILS SHEET 8

VERIFY SCALES
BAR IS ONE INCH ON ORIGINAL DRAWING
0 — 1"
IF NOT ONE INCH ON THIS SHEET, ADJUST SCALES ACCORDINGLY

JOB NO. 10976A.10
DRAWING NO. 00TC08
SHEET NO. 34 OF 464

LAST SAVED BY: dsevert

PROJECT NO. 9585A10 FILE NAME: 9585A10_SheetSeed.dgn

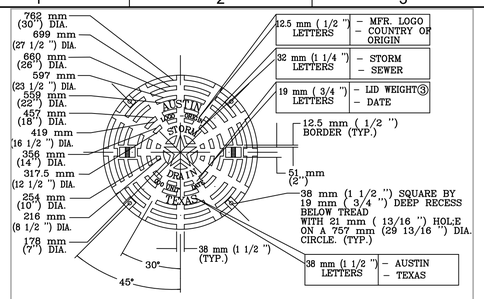

LID PLAN VIEW

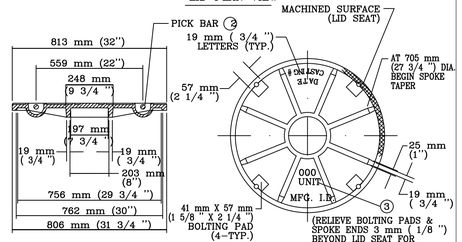

LID SECTION VIEW | LID SECTION VIEW

CITY OF AUSTIN DEPARTMENT OF WATERSHED PROTECTION AND DEVELOPMENT REVIEW	BOLTED STORM DRAIN MANHOLE RING AND 813 mm (32") COVER
RECORD COPY SIGNED BY GEORGE E. OSWALD 2/14/02 ADOPTED	THE ARCHITECT/ENGINEER ASSUMES RESPONSIBILITY FOR APPROPRIATE USE OF THIS STANDARD. STANDARD NO. 503S-5S 1 OF 3

C950 TYP — BOLTED STORM DRAIN MANHOLE RING AND 813 mm (32") COVER

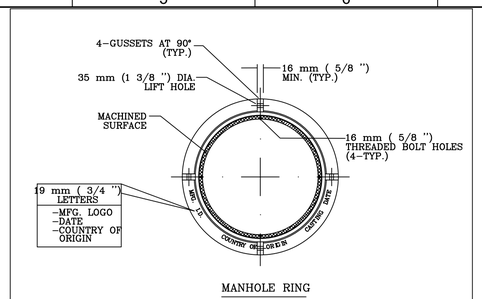

MANHOLE RING

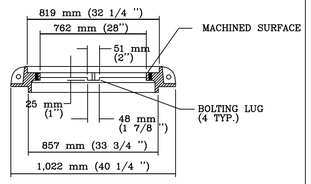

RING SECTION

CITY OF AUSTIN DEPARTMENT OF WATERSHED PROTECTION AND DEVELOPMENT REVIEW	BOLTED STORM DRAIN MANHOLE RING AND 813 mm (32") COVER
RECORD COPY SIGNED BY GEORGE E. OSWALD 2/14/02 ADOPTED	THE ARCHITECT/ENGINEER ASSUMES RESPONSIBILITY FOR APPROPRIATE USE OF THIS STANDARD. STANDARD NO. 503S-5S 2 OF 3

C950 TYP — BOLT STORM DRAIN MANHOLE RING AND 813 mm (32") COVER

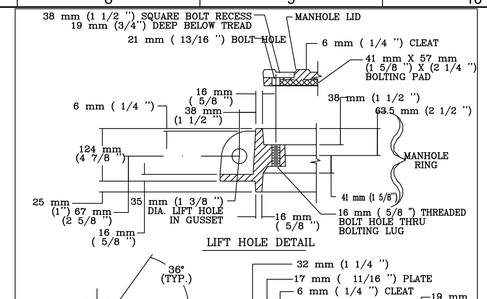

LIFT HOLE DETAIL

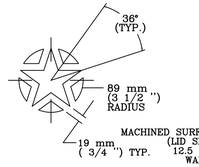

STAR LAYOUT

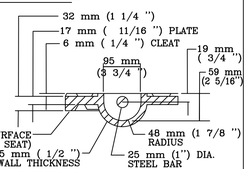

PICK BAR DETAIL

NOTES:
① ALL CORNERS AND EDGES SHALL HAVE A 1.5 mm (1/16 ") MINIMUM RADIUS.
② LIDS SHALL BE CAST WITH TWO 25 mm (1") DIA. STEEL PICK BARS.
③ LID WEIGHTS SHALL BE 935 N (210 LBS.) FOR CAST IRON OR 779 N (175 LBS.) FOR DUCTILE IRON. WEIGHT SHALL BE CAST ON BOTH TOP AND BOTTOM OF LID.
④ MANUFACTURER SHALL PROVIDE INDEPENDENT TESTING LABORATORY REPORT ON 25,000 POUND PROOF LOAD TEST CONDUCTED ACCORDING TO AASHTO M-306.
⑤ FILLETS SHALL BE 6 mm (1/4 ") RADIUS UNLESS OTHERWISE SPECIFIED.
⑥ MANUFACTURER SHALL REMOVE EXCESS IRON AND MACHINE FINISH SEATING SURFACES TO NOTED DIMENSIONS.
⑦ BOLTS SHALL BE 16 mm X 44 mm (5/8 " x 1 3/4 " x 11 N.C.) STAINLESS STEEL HEX HEAD (TYPE 316).

CITY OF AUSTIN DEPARTMENT OF WATERSHED PROTECTION AND DEVELOPMENT REVIEW	BOLTED STORM DRAIN MANHOLE RING AND 813 mm (32") COVER
RECORD COPY SIGNED BY GEORGE E. OSWALD 2/14/02 ADOPTED	THE ARCHITECT/ENGINEER ASSUMES RESPONSIBILITY FOR APPROPRIATE USE OF THIS STANDARD. STANDARD NO. 503S-5S 3 OF 3

C950 TYP — BOLT STORM DRAIN MANHOLE RING ANF 813 mm (32") COVER

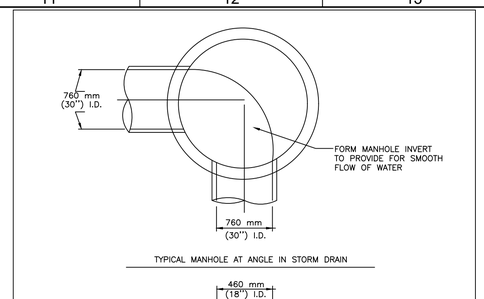

TYPICAL MANHOLE AT ANGLE IN STORM DRAIN

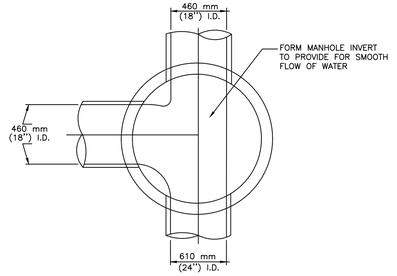

TYPICAL JUNCTION MANHOLE

CITY OF AUSTIN DEPARTMENT OF WATERSHED PROTECTION AND DEVELOPMENT REVIEW	MANHOLE INVERT PLAN
RECORD COPY SIGNED BY GEORGE E. OSWALD 2/14/02 ADOPTED	THE ARCHITECT/ENGINEER ASSUMES RESPONSIBILITY FOR APPROPRIATE USE OF THIS STANDARD. STANDARD NO. 506S-1

C951 TYP — MANHOLE INVERT PLAN

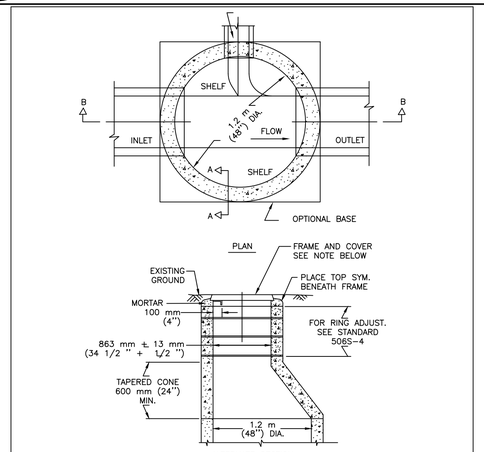

NOTE:
USE 800 mm (32") FRAME AND COVER.

MINIMUM MANHOLE DIA.	MINIMUM PIPE SIZE
1.2 m (4')	450 TO 600 mm (18 TO 24")
1.5 m (5')	750 mm TO 1.1 m (30 TO 42")
1.8 m (6')	1.2 TO 1.4 m (48 TO 54")
2.1 m (7')	1.5 TO 1.7 m (60 TO 66")

SIZE TO BE USED IS DEPENDENT ON DRAIN ANGLES.

	PRE-CAST CONCRETE STORM DRAIN MANHOLE
	THE ARCHITECT/ENGINEER ASSUMES RESPONSIBILITY FOR APPROPRIATE USE OF THIS STANDARD. STANDARD NO. 506S-3MOD 1 OF 2

C952 TYP — PER-CAST CONCRETE STORM DRAIN MANHOLE

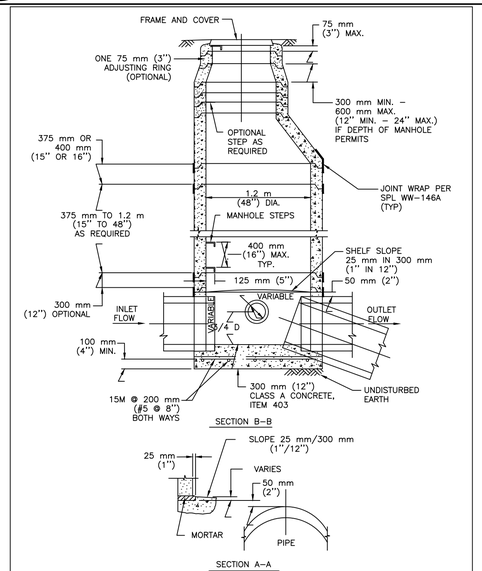

	PRE-CAST CONCRETE STORM DRAIN MANHOLE
	THE ARCHITECT/ENGINEER ASSUMES RESPONSIBILITY FOR APPROPRIATE USE OF THIS STANDARD. STANDARD NO. 506S-3MOD 2 OF 2

C952 TYP — PRE-CAST CONCRETE STORM DRAIN MANHOLE

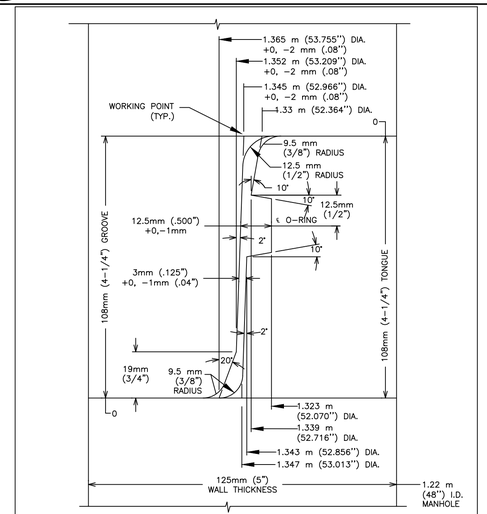

NOTES:
1. O-RING DIMENSION 20mm (25/32") DIA., 1013cc VOLUME.
2. DRAWING NOT TO SCALE FOR CLARIFICATION OF DIMENSIONS.
3. FOR EX. MANHOLES ONLY.

CITY OF AUSTIN AUSTIN WATER UTILITY	O-RING JOINT DETAIL PRECAST MANHOLE SECTION
RECORD COPY SIGNED BY KATHI L FLOWERS 06/01/10 ADOPTED	THE ARCHITECT/ENGINEER ASSUMES RESPONSIBILITY FOR APPROPRIATE USE OF THIS STANDARD. STANDARD NO. 506S-12

C953 TYP — O-RING JOINT DETAIL PRECAST MANHOLE SECTION

THIS CONFORMED DOCUMENT IS RELEASED FOR THE CONVENIENCE OF THE CONTRACTOR UNDER THE AUTHORITY OF:

Stephanie D Blew 11-01-22

STEPHANIE D. BLEW, P.E. DATE
TX LIC NO. 92682

SEE DISCLAIMER FOR LIMITATIONS OF USE.

CONTRACT DOCUMENTS DATED JUNE 10, 2022, AS PART OF THE BIDDING DOCUMENTS (DRAWINGS AND SPECIFICATIONS) AND SUBSEQUENTLY ISSUED ADDENDA HAVE BEEN MERGED INTO ONE CONFORMING SET OF DOCUMENTS FOR THE CONVENIENCE OF THE CONTRACTOR. IF INCONSISTENCIES OR AMBIGUITIES BETWEEN "CONFORMED" DOCUMENTS AND CONTRACT DOCUMENTS ARE FOUND, THE CONTRACT DOCUMENTS SHALL GOVERN.

REV	DATE	BY	DESCRIPTION
			CONFORMED DOCUMENTS

DESIGNED SDB
DRAWN JF
CHECKED AR
DATE NOVEMBER 2022

** ORIGINAL SEALED BY STEPHANIE D. BLEW 02-28-22 TX PE 92682 **

CAS CONSULTING & SERVICES, INC.
CIVIL ENGINEERING | PROGRAM MANAGEMENT | CONSTRUCTION MANAGEMENT
7908 Cameron Road | Austin, TX 78754 | REG. NO. F-003572
Main: 512.836.2588 | Fax: 512.836.4515

carollo® TBPELS No. F-882

CITY OF AUSTIN FOUNDED 1839

CITY OF AUSTIN

CITY OF AUSTIN
WILD HORSE RANCH WWTP EXPANSION
CIVIL
DRAINAGE TYPICAL DETAILS
SHEET 1 OF 4

VERIFY SCALES
BAR IS ONE INCH ON ORIGINAL DRAWING
0 1"
IF NOT ONE INCH ON THIS SHEET, ADJUST SCALES ACCORDINGLY

JOB NO. 10976A.00
DRAWING NO. 00TC10
SHEET NO. 35 OF 464

LAST SAVED BY: dseivert

PROJECT NO. 9585A10 FILE NAME: 9585A10_SheetSeed.dgn

SP-2022-1025C

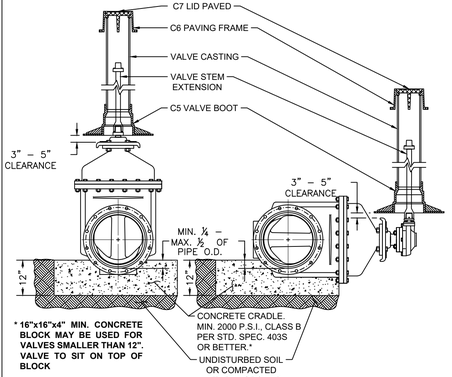

*** 16"x16"x4" MIN. CONCRETE BLOCK MAY BE USED FOR VALVES SMALLER THAN 12". VALVE TO SIT ON TOP OF BLOCK**

VERTICAL VALVE

HORIZONTAL VALVE
ONLY TO BE USED WHEN CALLED OUT ON THE DRAWINGS.

NOTES:

1. WELD SOCKET 2½" x 2" DEEP TO 1" SCH. 40 CARBON STEEL ROUND STEM EXTENSION, FITTED ON OPERATING NUT. [SCH. 80 FOR LENGTHS OVER 10'.]
2. VALVE CASTING SHALL BE 6" DI PIPE WITH BELL OR COLLAR CENTERED OVER VALVE BOOT.
3. NUT AT TOP OF VALVE EXTENSION ROD SHALL BE SQUARE 2" LONG WELDED TO TOP OF ROD.
4. VALVE STEM EXTENSIONS ARE REQUIRED ON ALL VALVES THAT EXCEED 3' DEEP FROM FINISHED GRADE. VALVE EXTENSIONS SHALL BE PLACED SUCH THAT THE EXTENSION NUT IS BETWEEN 12" AND 18" FROM FINISHED GRADE.

RECLAIMED WATER: ALL RECLAIMED PVC PIPE SHALL BE MANUFACTURED PURPLE PIPE. HDPE PIPE SHALL BE MANUFACTURED WITH PURPLE STRIPES. ALL OTHER PIPE AND APPURTENANCES SHALL BE MANUFACTURED PURPLE IF AVAILABLE. ALL PIPE AND FITTINGS THAT ARE NOT AVAILABLE FROM THE MANUFACTURER IN PURPLE SHALL BE PAINTED PURPLE PER SPL WW-3C. ALL BURIED DI AND CI PIPE AND FITTINGS SHALL ALSO BE WRAPPED IN PURPLE POLYETHYLENE PER SPL WW-27D. ALL COVERS SHALL HAVE **"RECLAIMED WATER"** CAST INTO THEM.

CITY OF AUSTIN AUSTIN WATER	TYPICAL GATE VALVE 4" - 16"	
RECORD COPY SIGNED BY KATHI L FLOWERS 05/18/2016 ADOPTED	THE ARCHITECT/ENGINEER ASSUMES RESPONSIBILITY FOR APPROPRIATE USE OF THIS STANDARD.	STANDARD NO. 511-AW-01 1 OF 4

C955 TYP — TYPICAL GATE VALVE 4" - 16"

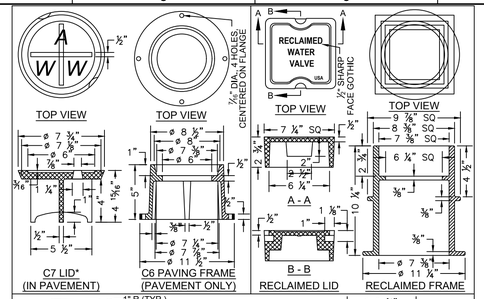

NOTES:

1. MATERIAL SHALL BE GRAY CAST IRON, ASTM A48, GRADE 30B.
2. THE MANUFACTURER'S IDENTIFICATION AND CASTING NUMBER, AND THE COUNTRY WHERE CAST, SHALL BE DISTINCTLY CAST ONTO EACH LID, FRAME, COLLAR AND BASE.
3. DRAFT AND SHRINKAGE ALLOWANCE SHALL BE IN ACCORDANCE WITH NORMAL FOUNDRY PRACTICE.
4. CASTING FINISH BY MANUFACTURER SHALL INCLUDE REMOVAL OF FINS AND FLASHING, AND PAINT WITH BLACK ASPHALT COATING.

WEIGHTS:

C7 LID: 13 LBS
RECLAIMED LID: 15 LBS
C6 FRAME: 23 LBS
RECLAIMED FRAME: 33 LBS
C5 BASE: 78 LBS

* LETTERING SHALL BE 1 ½" 2 PICK BAR SLOTS REQUIRED

CITY OF AUSTIN AUSTIN WATER	TYPICAL GATE VALVE 4" - 16"	
RECORD COPY SIGNED BY KATHI L FLOWERS 05/18/2016 ADOPTED	THE ARCHITECT/ENGINEER ASSUMES RESPONSIBILITY FOR APPROPRIATE USE OF THIS STANDARD.	STANDARD NO. 511-AW-01 2 OF 4

C955 TYP — TYPICAL GATE VALVE 4" - 16"

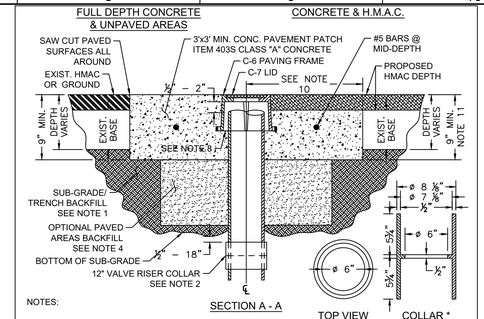

NOTES:

1. SUB-GRADE/TRENCH BACKFILL SHALL BE COMPACTED AS PER ITEM 201S, SUB-GRADE PREPARATION.
2. TO ADJUST VALVE CASTINGS TO FINAL GRADE, REMOVE RISER PIPE BELOW SUB-GRADE AND INSTALL APPROPRIATE LENGTH OF NEW RISER PIPE TO ACHIEVE FINAL GRADE. CONNECT THE TWO PIECES OF RISER PIPE WITH A 6" COLLAR MIN. 12" LENGTH APPROXIMATELY CENTERED ON THE JOINT WITH THE TOP OF SLEEVE LOCATED ½" - 18" BELOW SUB-GRADE. THE INSIDE "LIP" OF COLLAR TO BE PAINTED WITH FLUORESCENT WHITE PAINT OR COVERED WITH FLUORESCENT WHITE TAPE. ALTERNATE: FOR OPTIONAL SINGLE PIECE RISER INSTALLATION SEE SHEET 4 OF 4.
3. CLEAN VALVE BOX OF ALL DEBRIS DOWN TO THE NUT OF THE VALVE; NUT SHALL OPERATE WITH NO OBSTRUCTION.
4. WHERE CASTINGS TO BE REMOVED REQUIRE EXCAVATION GREATER THAN 20" DEEP, CONTRACTOR MAY ELECT TO FILL EXCAVATION WITH CONTROLLED LOW STRENGTH MATERIAL (SPEC. ITEM 402S) TO THE UNDERSIDE OF THE CONCRETE. PAVEMENT PATCH IN LIEU OF COMPACTED BACKFILL.
5. REINFORCING STEEL SHALL MEET SPEC. ITEM 406S.7.
6. NO MORE THAN 2 SECTIONS OF PIPE SHALL BE USED FROM VALVE TO FINAL GRADE.
7. BELL AND SPIGOT IS ACCEPTABLE FOR DEPTH OVER 18'.

CITY OF AUSTIN AUSTIN WATER	TYPICAL GATE VALVE 4" - 16"	
RECORD COPY SIGNED BY KATHI L FLOWERS 05/18/2016 ADOPTED	THE ARCHITECT/ENGINEER ASSUMES RESPONSIBILITY FOR APPROPRIATE USE OF THIS STANDARD.	STANDARD NO. 511-AW-01 3 OF 4

C955 TYP — TYPICAL GATE VALVE 4" - 16"

NOTES (CONT'):

8. PAVING FRAME SHALL BE FLUSH WITH THE CONC. PAD AND PLACED ½" - 2" ABOVE RISER PIPE (FRAME SHALL NOT REST ON RISER.)
9. IN UNPAVED AREAS, INSTALL ONE DELINEATOR STAKE IMMEDIATELY ADJACENT TO THE EDGE OF THE CONCRETE PAD. DELINEATOR SHALL BE BLUE FOR POTABLE WATER AND PURPLE FOR RECLAIMED WATER AND SHALL EXTEND AT LEAST 60" ABOVE GROUND. DELINEATORS SHALL HAVE 2" WIDE, WHITE IN COLOR, TYPE I REFLECTIVE TAPE MOUNTED DIAGONALLY AT 12" SPACING ON BOTH SIDES.
10. VALVE SHALL TYPICALLY BE CENTERED IN CONCRETE DIAMOND BUT MAY BE OFFSET WITH A MIN. OF 12" FROM CENTER OF VALVE LID TO EDGE OF CONCRETE IN ALL DIRECTIONS.
11. MIN. TOTAL DEPTH OF ASPHALT PLUS CONC. IS 9" AND MIN. DEPTH OF CONC. PAD SHALL BE 5"

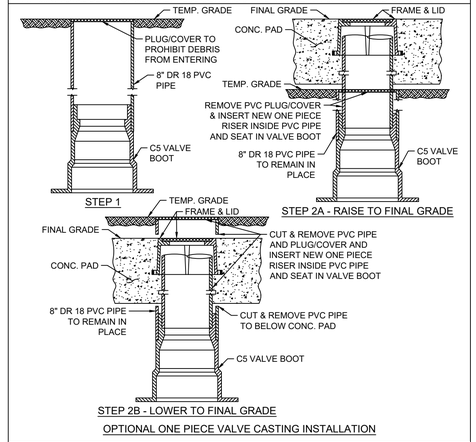

OPTIONAL ONE PIECE VALVE CASTING INSTALLATION

CITY OF AUSTIN AUSTIN WATER	TYPICAL GATE VALVE 4" - 16"	
RECORD COPY SIGNED BY KATHI L FLOWERS 05/18/2016 ADOPTED	THE ARCHITECT/ENGINEER ASSUMES RESPONSIBILITY FOR APPROPRIATE USE OF THIS STANDARD.	STANDARD NO. 511-AW-01 4 OF 4

C955 TYP J — TYPICAL GATE VALVE 4" - 16"

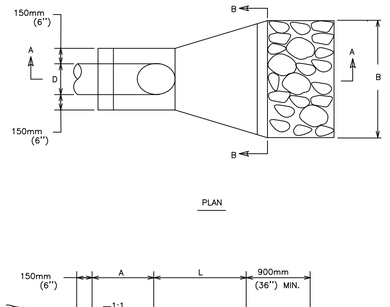

CITY OF AUSTIN DEPARTMENT OF WATERSHED PROTECTION AND DEVELOPMENT REVIEW	HEADWALL FOR FILTRATION PONDS W/OUTFALL PIPE 150mm (6") TO 375mm (15") DIA.	
RECORD COPY SIGNED BY GEORGE E. OSWALD 3/15/05 ADOPTED	THE ARCHITECT/ENGINEER ASSUMES RESPONSIBILITY FOR APPROPRIATE USE OF THIS STANDARD.	STANDARD NO. 508S-15 1 OF 2

C956 TYP — HEADWALL FOR FILTRATION POND W/ OUTFALL PIPE 150mm (6") DIA. TO 375mm (15") DIA.

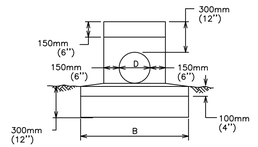

A	450mm (18")	500mm (20")	550mm (22")	600mm (24")	675mm (27")
B	750mm (30")	800mm (32")	850mm (34")	1.05 m (42")	1.27 m (51")
D	150mm (6")	200mm (8")	250mm (10")	300mm (12")	375mm (15")
L	600mm (24")	600mm (24")	750mm (30")	900mm (36")	1.2 m (48")

CITY OF AUSTIN DEPARTMENT OF WATERSHED PROTECTION AND DEVELOPMENT REVIEW	HEADWALL FOR FILTRATION PONDS W/OUTFALL PIPE 150mm (6") TO 375mm (15") DIA.	
RECORD COPY SIGNED BY GEORGE E. OSWALD 3/15/05 ADOPTED	THE ARCHITECT/ENGINEER ASSUMES RESPONSIBILITY FOR APPROPRIATE USE OF THIS STANDARD.	STANDARD NO. 508S-15 2 OF 2

C956 TYP — HEADWALL FOR FILTRATION POND W/ OUTFALL PIPE 150mm (6") DIA. TO 375mm (15") DIA.

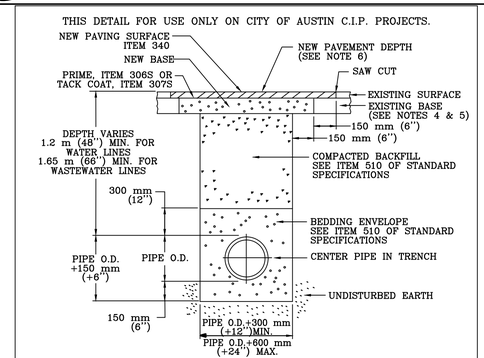

NOTES:

1. THE EXISTING PAVING SURFACE SHALL BE SAW CUT IN A STRAIGHT LINE A MINIMUM OF 300 mm (12") WIDER THAN THE UNDISTURBED SIDES OF THE TRENCH, SYMETRICAL ABOUT THE CENTER LINE OF THE EXCAVATION.
2. ANY CONCRETE PAVING SHALL BE SAW CUT 150 mm (6") WIDER THAN UNDISTURBED SIDES OF EXCAVATION.
3. IF EXCAVATION AREA IS OPEN FOR TEMPORARY PUBLIC USE, THE SURFACE SHALL BE MAINTAINED LEVEL WITH ADJACENT RIDING SURFACE WITH COLD MIX OR TEMPORARY HOT MIX ASPHALTIC CONCRETE.
4. ROAD BASE AND SURFACE MATERIALS IN THE TRENCH CUT SHALL BE REPLACED IN KIND OF EQUAL THICKNESS, OR MINIMUM BASE THICKNESS OF 250 mm (10"), WHICHEVER IS GREATER.
5. ALL DAMAGED AREAS OF PAVEMENT OUTSIDE THE TRENCH CUT SHALL BE REMOVED AND REPLACED WITH MINIMUM OF 200 mm (8") OF BASE OR MATCH EXISTING THICKNESS, WHICHEVER IS GREATER.
6. SURFACE PAVEMENT SHALL BE OF THE KIND AND THICKNESS AS EXISTING, OR MINIMUM 50 mm (2"), WHICHEVER IS GREATER.

CITY OF AUSTIN WATER AND WASTEWATER UTILITY	TYPICAL TRENCH WITH PAVED SURFACE	
RECORD COPY SIGNED BY KATHI L. FLOWERS 8/19/02 ADOPTED	THE ARCHITECT/ENGINEER ASSUMES RESPONSIBILITY FOR APPROPRIATE USE OF THIS STANDARD.	STANDARD NO. 510S-3

S957 TYP — TYPICAL TRENCH WITH PAVED SURFACE

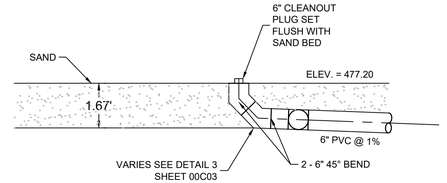

958 TYP — FILTRATION POND CLEANOUT DETAIL

THIS CONFORMED DOCUMENT IS RELEASED FOR THE CONVENIENCE OF THE CONTRACTOR UNDER THE AUTHORITY OF:

Stephanie D Blew 11-01-22

STEPHANIE D. BLEW, P.E. DATE
TX LIC NO. 92682

SEE DISCLAIMER FOR LIMITATIONS OF USE.

CONTRACT DOCUMENTS DATED JUNE 10, 2022, AS PART OF THE BIDDING DOCUMENTS (DRAWINGS AND SPECIFICATIONS) AND SUBSEQUENTLY ISSUED ADDENDA HAVE BEEN MERGED INTO ONE CONFORMING SET OF DOCUMENTS FOR THE CONVENIENCE OF THE CONTRACTOR. IF INCONSISTENCIES OR AMBIGUITIES BETWEEN "CONFORMED" DOCUMENTS AND CONTRACT DOCUMENTS ARE FOUND, THE CONTRACT DOCUMENTS SHALL GOVERN.

REV	DATE	BY	DESCRIPTION
			CONFORMED DOCUMENTS

DESIGNED SDB
DRAWN JF
CHECKED AR
DATE NOVEMBER 2022

** ORIGINAL SEALED BY STEPHANIE D. BLEW 02-28-22 TX PE 92682 **

CAS CONSULTING & SERVICES, INC.
CIVIL ENGINEERING | PROGRAM MANAGEMENT | CONSTRUCTION MANAGEMENT
7908 Cameron Road | Austin, TX 78754 |REG. NO. F-003572
Main: 512.836.2388 | Fax: 512.836.4515

carollo® TBPELS No. F-882

CITY OF AUSTIN FOUNDED 1839 — CITY OF AUSTIN

CITY OF AUSTIN
WILD HORSE RANCH WWTP EXPANSION
CIVIL
DRAINAGE TYPICAL DETAILS
SHEET 2 OF 4

VERIFY SCALES
BAR IS ONE INCH ON ORIGINAL DRAWING
0 1"
IF NOT ONE INCH ON THIS SHEET, ADJUST SCALES ACCORDINGLY

JOB NO. 10976A.00
DRAWING NO. 00TC11
SHEET NO. 36 OF 464

LAST SAVED BY: dseivert

PROJECT NO. 9585A10 FILE NAME: 9585A10_SheetSeed.dgn

SP-2022-1025C

TABLE OF VARIABLE DIMENSIONS AND QUANTITIES FOR ONE HEADWALL (5)

Slope	Out of Pipe (D)	Values for One Pipe W	X	Y	L	Reinf (Lbs)	Conc (CY) (1)	Values to be Added for Each Add'l Pipe X and W	Reinf (Lbs)	Conc (CY) (1)
2:1	12"	4'-7 1/2"	2'-6"	2'-10"	3'-3 1/2"	88	0.6	1'-9"	20	0.2
	15"	5'-5 1/2"	2'-9 1/2"	3'-4"	3'-10 1/2"	103	0.7	2'-2"	24	0.3
	18"	6'-4 1/2"	3'-1"	3'-10"	4'-5"	124	0.9	2'-8"	32	0.3
	21"	7'-2 1/2"	3'-4 1/2"	4'-4"	5'-0"	143	1.1	3'-1"	43	0.4
	24"	8'-2 1/2"	3'-9 1/2"	4'-10"	5'-7"	164	1.3	3'-7"	50	0.5
	27"	9'-1"	4'-1"	5'-4"	6'-2"	179	1.5	3'-11"	56	0.6
	30"	9'-11 1/2"	4'-4 1/2"	5'-10"	6'-8 1/2"	203	1.7	4'-4"	65	0.8
	33"	10'-10"	4'-8"	6'-4"	7'-3 1/2"	224	2.0	4'-8"	71	0.9
	36"	11'-8 1/2"	4'-11 1/2"	6'-10"	7'-10 3/4"	249	2.2	5'-1"	81	1.0
	42"	13'-5 1/2"	5'-6 1/2"	7'-10"	9'-0 1/2"	298	2.8	5'-10"	97	1.3
	48"	15'-3"	6'-1 1/2"	9'-4"	10'-3"	360	3.8	6'-7"	117	1.7
	54"	17'-1 1/2"	6'-8 1/2"	10'-4"	11'-11 1/2"	427	4.5	7'-6"	151	2.1
	60"	19'-2 1/2"	7'-3 1/2"	11'-4"	13'-1"	481	5.3	8'-3"	174	2.5
	66"	20'-11 1/2"	7'-10 1/2"	12'-4"	14'-3"	544	6.2	9'-9"	194	2.9
	72"	22'-8 1/2"	8'-5 1/2"	13'-4"	15'-4 1/2"	601	7.1	9'-4"	213	3.3
3:1	12"	6'-3"	2'-6"	4'-3"	4'-11"	118	0.8	1'-9"	22	0.2
	15"	7'-5"	2'-9 1/2"	5'-0"	5'-9 1/2"	137	1.1	2'-2"	28	0.3
	18"	8'-6 1/2"	3'-1"	5'-9"	6'-7 1/2"	170	1.3	2'-8"	37	0.5
	21"	9'-8 1/2"	3'-4 1/2"	6'-4"	7'-6"	193	1.6	3'-1"	48	0.6
	24"	11'-0"	3'-9 1/2"	7'-3"	8'-4 1/2"	227	2.0	3'-7"	58	0.7
	27"	12'-2"	4'-1"	8'-0"	9'-2 1/2"	251	2.3	3'-11"	67	0.8
	30"	13'-4"	4'-4 1/2"	8'-9"	10'-1 1/2"	293	2.7	4'-4"	77	1.0
	33"	14'-5 1/2"	4'-8"	9'-6"	10'-11 1/2"	318	3.1	4'-8"	84	1.2
	36"	15'-7 1/2"	4'-11 1/2"	10'-3"	11'-10"	351	3.5	5'-1"	96	1.4
	42"	17'-11 1/2"	5'-6 1/2"	11'-9"	13'-6 1/2"	432	4.5	5'-10"	119	1.7
	48"	21'-1 1/2"	6'-1 1/2"	14'-0"	16'-2"	537	6.1	6'-7"	146	2.3
	54"	23'-5 1/2"	6'-8 1/2"	15'-6"	17'-10 3/4"	630	7.3	7'-6"	186	2.9
	60"	25'-9 1/2"	7'-3 1/2"	17'-0"	19'-7 1/2"	719	8.7	8'-3"	219	3.4
	66"	28'-1"	7'-10 1/2"	18'-6"	21'-4 1/2"	811	10.1	8'-9"	242	3.9
	72"	30'-4 1/2"	8'-5 1/2"	20'-0"	23'-1 1/2"	924	11.7	9'-4"	272	4.4
4:1	12"	7'-10 1/2"	2'-6"	5'-8"	6'-6 1/2"	148	1.0	1'-9"	24	0.3
	15"	9'-4"	2'-9 1/2"	6'-8"	7'-8 1/2"	181	1.5	2'-2"	32	0.4
	18"	10'-9 1/2"	3'-1"	7'-8"	8'-10 1/2"	221	1.9	2'-8"	42	0.5
	21"	12'-2 1/2"	3'-4 1/2"	8'-8"	10'-0"	260	2.3	3'-1"	57	0.7
	24"	13'-9 1/2"	3'-9 1/2"	9'-8"	11'-2"	301	2.8	3'-7"	67	0.9
	27"	15'-3"	4'-1"	10'-8"	12'-3 1/2"	334	3.3	3'-11"	77	1.0
	30"	16'-8 1/2"	4'-4 1/2"	11'-8"	13'-5 1/2"	385	3.8	4'-4"	89	1.3
	33"	18'-1 1/2"	4'-8"	12'-8"	14'-7 1/2"	425	4.5	4'-8"	101	1.4
	36"	19'-7"	4'-11 1/2"	13'-8"	15'-9 1/2"	472	5.1	5'-1"	115	1.7
	42"	22'-5 1/2"	5'-6 1/2"	15'-8"	18'-1"	583	6.5	5'-10"	141	2.1
	48"	26'-6 1/2"	6'-1 1/2"	18'-8"	21'-6 1/2"	730	8.9	6'-7"	175	2.8
	54"	29'-3"	6'-8 1/2"	20'-8"	23'-10 1/2"	875	10.7	7'-6"	226	3.6
	60"	32'-3 1/2"	7'-3 1/2"	22'-8"	26'-2"	996	12.7	8'-3"	264	4.3
	66"	35'-2 1/2"	7'-10 1/2"	24'-8"	28'-5 1/2"	1,140	14.9	8'-9"	300	4.9
	72"	38'-1 1/2"	8'-5 1/2"	26'-8"	30'-9 1/2"	1,297	17.3	9'-4"	334	5.6
6:1	12"	11'-2"	2'-6"	8'-6"	9'-9 1/2"	224	1.9	1'-9"	28	0.4
	15"	13'-2 1/2"	2'-9 1/2"	10'-0"	11'-6 1/2"	268	2.5	2'-2"	37	0.5
	18"	15'-2 1/2"	3'-1"	11'-6"	13'-3 1/2"	330	3.2	2'-8"	50	0.7
	21"	17'-2 1/2"	3'-4 1/2"	13'-0"	15'-0 1/2"	387	3.9	3'-1"	69	0.9
	24"	19'-4 1/2"	3'-9 1/2"	14'-6"	16'-9"	453	4.8	3'-7"	80	1.2
	27"	21'-4 1/2"	4'-1"	16'-0"	18'-5 1/2"	512	5.7	3'-11"	96	1.4
	30"	23'-5 1/2"	4'-4 1/2"	17'-6"	20'-2 1/2"	593	6.7	4'-4"	110	1.7
	33"	25'-5 1/2"	4'-8"	19'-0"	21'-11 1/2"	673	7.8	4'-8"	127	2.0
	36"	27'-5 1/2"	4'-11 1/2"	20'-6"	23'-8"	735	9.0	5'-1"	144	2.3
	42"	31'-6 1/2"	5'-6 1/2"	23'-6"	27'-1 1/2"	922	11.5	5'-10"	179	3.0
	48"	37'-3 1/2"	6'-1 1/2"	28'-0"	32'-4"	1,191	15.9	6'-7"	231	4.0
	54"	41'-4 1/2"	6'-8 1/2"	31'-0"	35'-9 1/2"	1,424	19.2	7'-6"	300	5.0
	60"	45'-4 1/2"	7'-3 1/2"	34'-0"	39'-3"	1,631	22.9	8'-3"	353	6.0

DISCLAIMER: This standard is governed by the Texas Engineering Practice Act. No warranty of any kind is made by TxDOT for any purpose whatsoever. TxDOT assumes no responsibility and shall not be liable for any damages resulting from the use or reuse of this standard or any portion thereof without limitation or restriction.

DATE: 2/14

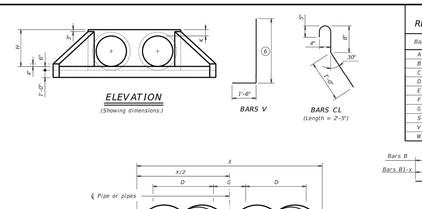

TABLE OF REINFORCING STEEL (5)

Bar	Size	Spa	No.
A	#4	1'-0"	–
B	#3	1'-6"	–
C	#4	1'-0"	–
D	#3	1'-0"	–
E	#5	–	4
F	#5	–	–
G	#3	–	2
S	#4	–	6
V	#4	1'-0"	–
W	#5	–	4

TABLE OF CONSTANT DIMENSIONS

Dia of Pipe (D)	G	K (4)	H
12"	0'-9"	1'-0"	2'-0"
15"	0'-11"	1'-0"	2'-3"
18"	1'-2"	1'-0"	2'-6"
21"	1'-4"	1'-0"	2'-9"
24"	1'-7"	1'-0"	3'-0"
27"	1'-9"	1'-0"	3'-3"
30"	1'-10"	1'-0"	3'-6"
33"	1'-11"	1'-0"	3'-9"
36"	2'-1"	1'-0"	4'-0"
42"	2'-4"	1'-0"	4'-6"
48"	2'-7"	1'-3"	5'-3"
54"	3'-0"	1'-3"	5'-9"
60"	3'-3"	1'-3"	6'-3"
66"	3'-5"	1'-3"	6'-9"
72"	3'-8"	1'-3"	7'-3"

1. Quantities shown are for concrete pipe and will increase slightly for metal pipe installations.
2. For vehicle safety, construct curbs no more than 2" above finished grade. Reduce curb height as necessary to meet these requirements. No changes will be made in quantities and no additional compensation will be allowed for this work.
3. Provide a 1'-0" footing as shown where required to maintain 4" minimum cover for pipes.
4. Dimensions shown are usual and maximum.
5. Quantities shown are for one structure end only (one headwall).
6. Min Length = $6" + 3' \times \left(\frac{12 \times H - 7}{12 \times L}\right)$
   Max Length = $12 \times H + 3' \times \left(\frac{12 \times H - 7}{12 \times L}\right) - 1"$
7. Lengths of wings based on SLT slope along this line.

MATERIAL NOTES:
Provide Grade 60 reinforcing steel.
Provide Class C concrete (f'_c = 3,600 psi).

GENERAL NOTES:
Designed according to AASHTO LRFD Bridge Design Specifications.
Do not mount bridge rails of any type directly to these culvert headwalls.
This standard may not be used for wall heights, H, exceeding the values shown.

Cover dimensions are clear dimensions, unless noted otherwise. Reinforcing dimensions are out-to-out of bars.

Texas Department of Transportation — Bridge Division Standard

CONCRETE HEADWALLS WITH FLARED WINGS FOR 0° SKEW PIPE CULVERTS

CH-FW-0

FILE: ch-fw00e-20.dgn | DN: TxDOT | CK: TxDOT | DW: TxDOT | CK: TxDOT
©TxDOT February 2020 | REVISIONS | CONT | SECT | JOB | HIGHWAY | DIST | COUNTY | SHEET NO.

C959 TYP — CONCRETE HEADWALLS WITH FLARED WINGS FOR 0° SKEW PIPE CULVERTS

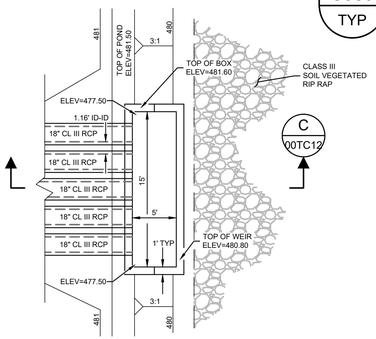

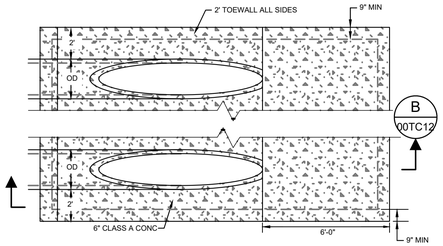

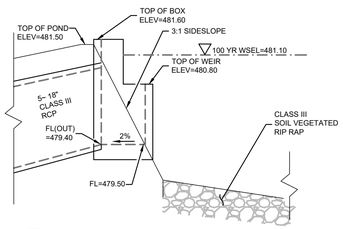

C 00TC12 SECTION C-C
SCALE: NTS
FILE:

C963 TYP — STORM WATER SPLITTER STRUCTURE

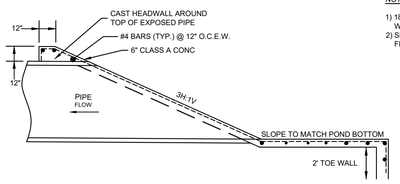

NOTES:
1) 18" RCP PIPES SHALL BE LAID WITH 6" SPACING BETWEEN BARRELS.
2) SPACED BETWEEN PIPES SHALL BE FILLED WITH CLSM.

B 00TC12 SECTION B-B
SCALE: NTS
FILE:

C964 TYP — MULTIPLE BARREL SLOPED CONCRETE HEADWALL

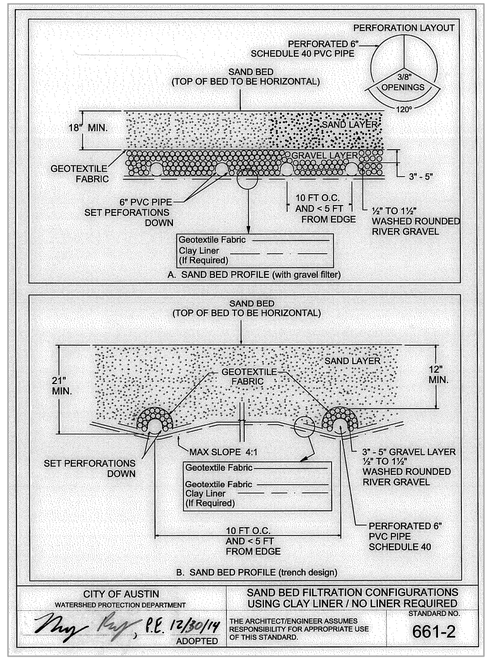

CITY OF AUSTIN — WATERSHED PROTECTION DEPARTMENT

SAND BED FILTRATION CONFIGURATIONS USING CLAY LINER / NO LINER REQUIRED

Mary Knapp, P.E. 12/30/14 ADOPTED

THE ARCHITECT/ENGINEER ASSUMES RESPONSIBILITY FOR APPROPRIATE USE OF THIS STANDARD.

STANDARD NO. 661-2

C960 TYP — SAND BED FILTRATION CONFIGURATIONS USING CLAY LINER / NO LINER REQUIRED

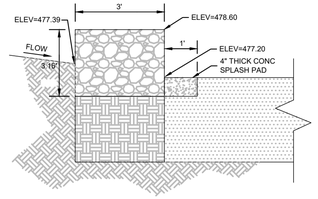

NOTES:
1. GABION WALL SHALL BE CONSTRUCTED IN ACCORDANCE WITH CITY OF AUSTIN STANDARD SPECIFICATION 594S.

C965 TYP — GABION AND SPLASH PAD

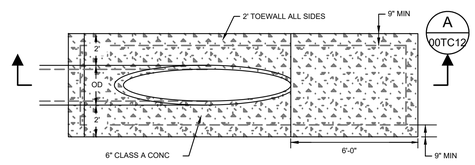

A 00TC12 SECTION A-A
SCALE: NTS
FILE:

C961 TYP — SINGLE BARREL SLOPE CONCRETE HEADWALL

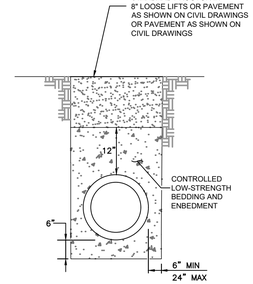

C962 TYP — FLOWABLE FILL ENCASEMENT

THIS CONFORMED DOCUMENT IS RELEASED FOR THE CONVENIENCE OF THE CONTRACTOR UNDER THE AUTHORITY OF:

Stephanie D Blew 11-01-22

STEPHANIE D. BLEW, P.E. DATE
TX LIC NO. 92682

SEE DISCLAIMER FOR LIMITATIONS OF USE.

CONTRACT DOCUMENTS DATED JUNE 10, 2022, AS PART OF THE BIDDING DOCUMENTS (DRAWINGS AND SPECIFICATIONS) AND SUBSEQUENTLY ISSUED ADDENDA HAVE BEEN MERGED INTO ONE CONFORMING SET OF DOCUMENTS FOR THE CONVENIENCE OF THE CONTRACTOR. IF INCONSISTENCIES OR AMBIGUITIES BETWEEN "CONFORMED" DOCUMENTS AND CONTRACT DOCUMENTS ARE FOUND, THE CONTRACT DOCUMENTS SHALL GOVERN.

REV	DATE	BY	DESCRIPTION
			CONFORMED DOCUMENTS

DESIGNED SDB | DRAWN JTC | CHECKED SDB | DATE NOVEMBER 2022

** ORIGINAL SEALED BY STEPHANIE D. BLEW 02-28-22 TX PE 92682 **

CAS CONSULTING & SERVICES, INC.
CIVIL ENGINEERING | PROGRAM MANAGEMENT | CONSTRUCTION MANAGEMENT
7908 Cameron Road | Austin, TX 78754 | REG. NO. F-003572
Main: 512.836.2588 | Fax: 512.836.4515

carollo® TBPELS No. F-882

CITY OF AUSTIN — FOUNDED 1839

CITY OF AUSTIN

CITY OF AUSTIN
WILD HORSE RANCH WWTP EXPANSION
CIVIL
DRAINAGE TYPICAL DETAILS SHEET 3 OF 4

VERIFY SCALES — BAR IS ONE INCH ON ORIGINAL DRAWING (0 — 1") — IF NOT ONE INCH ON THIS SHEET, ADJUST SCALES ACCORDINGLY

JOB NO. 10976A.00 | DRAWING NO. 00TC12 | SHEET NO. 37 OF 464

LAST SAVED BY: dseivert

PROJECT NO. 9585A10 FILE NAME: 9585A10_SheetSeed.dgn

SP-2022-1025C

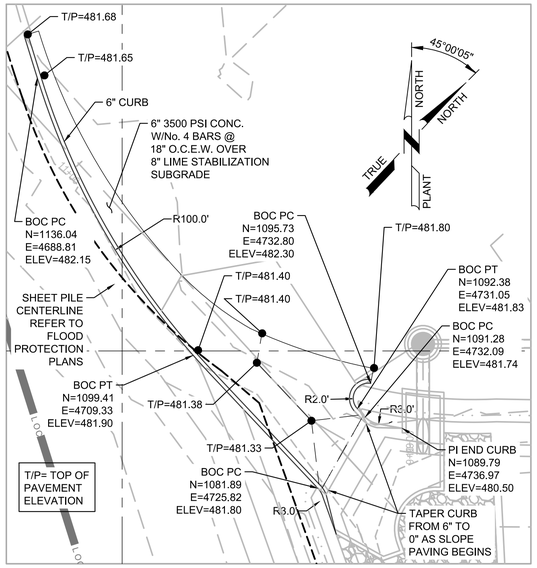

C966 TYP SLOPE PAVING DETAIL

SCALE: 1"=5'

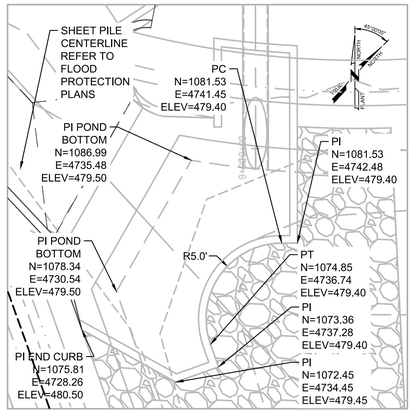

C967 TYP SLOPE PAVING DETAIL

SCALE: 1"=5'

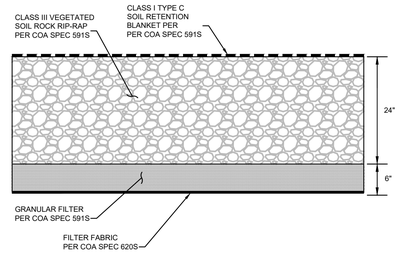

C968 TYP VEGETATED SOIL ROCK RIP RAP

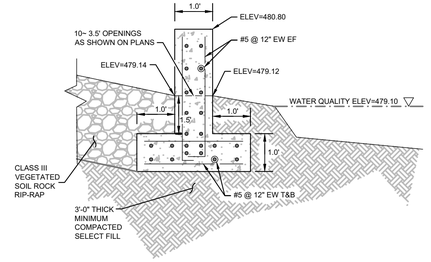

C969 TYP CONCRETE FLOW SPREADER

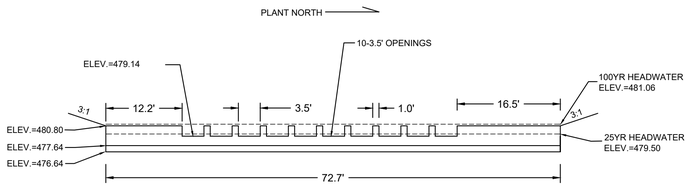

C970 TYP CONCRETE FLOW SPREADER SECTION

REVEGETATION WITH 609S NOTES:

1. DISTURBED AREAS WITHIN THE CWQZ SHALL BE REVEGETATED WITH THE SEED AND FORBES MIX SHOWN IN TABLE 1 BELOW.

2. ROOTED PLANTS WITHIN THE CWQZ SHALL BE AS SHOWIN IN TABLE 2 BELOW. AUSTIN WATER DOES NOT WANT TREES OR SHRUBS PLACE WITHIN IT'S EASEMENTS. AN EQUIVALENT AMOUNT OF IRNAMENTAL GASSES HAVE BEEN PROPOSED INSTEAD.

Table 1 - Upland Species, Full Sun

	Species	Seeding Rate (lbs/ac)	Desired proportion of a species in the total mix (%)	Total quantity of seed in mix (lbs/ac)	% of Seed Mix
Grass	Buffalograss	24	20	4.8	67
	Blue Grama	10	15.67	1.6	
	Galleta	10	15.67	1.6	
	Canada Wild Rye	10	15.67	1.6	
Forbes	Bluebonnet	20	18	3.6	33
	Indian Blanket	10	10	1.0	
	Maxican Hat	2	5	0.1	

Total seed mix application rate is 35 lbs/ac (23.5 lbs/ac grass, 11.5 lbs/ac forbes), Total area is 34,400 sf.

Table 2 - Rooted Plants, Full Sun

	Species	Size	Number
Ornamental Grasses	Big Bluestem	4" Pot or Quart	394
	Big Muhuly	4" Pot or Quart	394
	Bushy Bluestem	4" Pot or Quart	394
	Eastern Gamagrass	4" Pot or Quart	394
	Indiangrass	4" Pot or Quart	394
	Inland Seaoats	4" Pot or Quart	394
	Switchgrass	4" Pot or Quart	394
			2758

THIS CONFORMED DOCUMENT IS RELEASED FOR THE CONVENIENCE OF THE CONTRACTOR UNDER THE AUTHORITY OF:

Stephanie D Blew 11-01-22

STEPHANIE D. BLEW, P.E. DATE
TX LIC NO. 92682

SEE DISCLAIMER FOR LIMITATIONS OF USE.

CONTRACT DOCUMENTS DATED JUNE 10, 2022, AS PART OF THE BIDDING DOCUMENTS (DRAWINGS AND SPECIFICATIONS) AND SUBSEQUENTLY ISSUED ADDENDA HAVE BEEN MERGED INTO ONE CONFORMING SET OF DOCUMENTS FOR THE CONVENIENCE OF THE CONTRACTOR. IF INCONSISTENCIES OR AMBIGUITIES BETWEEN "CONFORMED" DOCUMENTS AND CONTRACT DOCUMENTS ARE FOUND, THE CONTRACT DOCUMENTS SHALL GOVERN.

REV	DATE	BY	DESCRIPTION
			CONFORMED DOCUMENTS

DESIGNED SDB
DRAWN JTC
CHECKED SDB
DATE NOVEMBER 2022

** ORIGINAL SEALED BY STEPHANIE D. BLEW 05-13-22 TX PE 92682 **

CAS CONSULTING & SERVICES, INC.
CIVIL ENGINEERING | PROGRAM MANAGEMENT | CONSTRUCTION MANAGEMENT
7908 Cameron Road | Austin, TX 78754 | REG. NO. F-003572
Main: 512.836.2388 | Fax: 512.836.4153

carollo® TBPELS No. F-882

CITY OF AUSTIN

CITY OF AUSTIN
WILD HORSE RANCH WWTP EXPANSION
CIVIL
DRAINAGE TYPICAL DETAILS
SHEET 4 0F 4

VERIFY SCALES
BAR IS ONE INCH ON ORIGINAL DRAWING
0 1"
IF NOT ONE INCH ON THIS SHEET, ADJUST SCALES ACCORDINGLY

JOB NO. 10976A.00
DRAWING NO. 00TC13
SHEET NO. 38 OF 464

LAST SAVED BY: dseivert

PROJECT NO. 9585A10 FILE NAME: 9585A10_SheetSeed.dgn

SP-2022-1025C

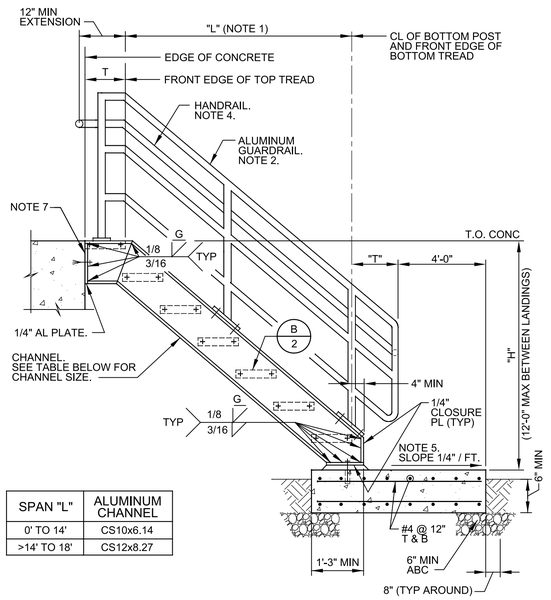

SPAN "L"	ALUMINUM CHANNEL
0' TO 14'	CS10x6.14
>14' TO 18'	CS12x8.27

A / - ELEVATION - STAIRS

AC101 TYP — STAIRS - ALUMINUM - FLUSH TOP - THREE RAIL

NS — SHEET 1 OF 3 — 02/16/21

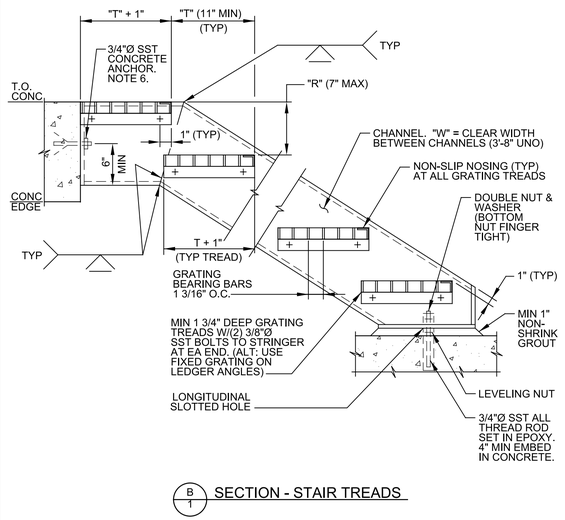

B / 1 SECTION - STAIR TREADS

AC101 TYP — STAIRS - ALUMINUM - FLUSH TOP - THREE RAIL

NS — SHEET 2 OF 3 — 02/16/21

NOTES:

1. SEE DRAWINGS FOR DIMENSIONS "H", "L", "R", "T" AND "W".
2. SEE DETAIL AC500/TYP FOR ALUMINUM GUARDRAIL NOTES AND DETAIL AC504/TYP FOR ALUMINUM GUARDRAIL DETAILS.
3. COAT ALUMINUM SURFACES IN CONTACT WITH CONCRETE, AND INSTALL ISOLATION SLEEVES AND WASHERS BETWEEN DISSIMILAR METALS AS SPECIFIED.
4. PROVIDE HANDRAIL EXTENSIONS AS SHOWN AT BOTH SIDES OF STAIR, UNLESS HANDRAIL IS CONTINUOUS (AS AT SWITCHBACK STAIR).
5. AT EXTERIOR STAIRS, PROVIDE CONCRETE SLAB ON GRADE UNLESS OTHERWISE INDICATED ON THE DRAWINGS. MINIMUM CONCRETE SLAB WIDTH = STAIR CLEAR WIDTH ("W") PLUS 2'-0" (12" EACH SIDE). EDGE TOP CORNERS OF SLAB TO 1/4" RADIUS.
6. INSTALL CONCRETE ANCHORS MIN 6" FROM BOTTOM AND 6" FROM SIDES/EDGES OF CONCRETE.
7. CONNECTION TO CONCRETE SHOWN. SEE DETAIL AC120/TYP FOR CONNECTION AT METAL FRAMING.

THIS CONFORMED DOCUMENT IS RELEASED FOR THE CONVENIENCE OF THE CONTRACTOR UNDER THE AUTHORITY OF:

11-01-22

DANNY M HURTADO, P.E. — DATE
TX LIC NO. 104266

SEE DISCLAIMER FOR LIMITATIONS OF USE.

CONTRACT DOCUMENTS DATED JUNE 10, 2022, AS PART OF THE BIDDING DOCUMENTS (DRAWINGS AND SPECIFICATIONS) AND SUBSEQUENTLY ISSUED ADDENDA HAVE BEEN MERGED INTO ONE CONFORMING SET OF DOCUMENTS FOR THE CONVENIENCE OF THE CONTRACTOR. IF INCONSISTENCIES OR AMBIGUITIES BETWEEN "CONFORMED" DOCUMENTS AND CONTRACT DOCUMENTS ARE FOUND, THE CONTRACT DOCUMENTS SHALL GOVERN.

AC101 TYP — STAIRS - ALUMINUM - FLUSH TOP - THREE RAIL

NS — SHEET 3 OF 3 — 02/16/21

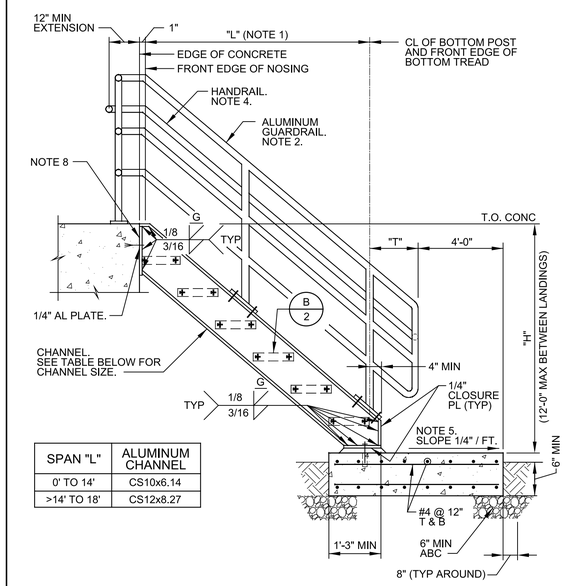

SPAN "L"	ALUMINUM CHANNEL
0' TO 14'	CS10x6.14
>14' TO 18'	CS12x8.27

A / - ELEVATION - STAIRS

AC111 TYP — STAIRS - ALUMINUM - THREE RAIL

NS — SHEET 1 OF 3 — 02/16/21

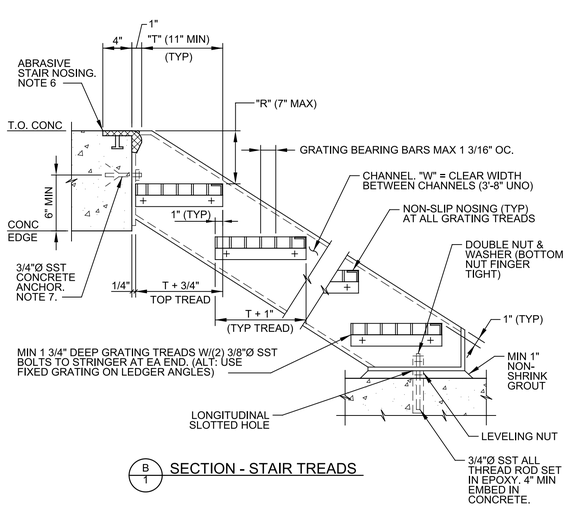

B / 1 SECTION - STAIR TREADS

AC111 TYP — STAIRS - ALUMINUM - THREE RAIL

NS — SHEET 2 OF 3 — 02/16/21

NOTES:

1. SEE DRAWINGS FOR DIMENSIONS "H", "L", "R", "T" AND "W".
2. SEE DETAIL AC500/TYP FOR ALUMINUM GUARDRAIL NOTES AND DETAIL AC504/TYP FOR ALUMINUM GUARDRAIL DETAILS.
3. COAT ALUMINUM SURFACES IN CONTACT WITH CONCRETE, AND INSTALL ISOLATION SLEEVES AND WASHERS BETWEEN DISSIMILAR METALS AS SPECIFIED.
4. PROVIDE HANDRAIL EXTENSIONS AS SHOWN AT BOTH SIDES OF STAIR, UNLESS HANDRAIL IS CONTINUOUS (AS AT SWITCHBACK STAIR).
5. AT EXTERIOR STAIRS, PROVIDE CONCRETE SLAB ON GRADE UNLESS OTHERWISE INDICATED ON THE DRAWINGS. MINIMUM CONCRETE SLAB WIDTH = STAIR CLEAR WIDTH ("W") PLUS 2'-0" (12" EACH SIDE). EDGE TOP CORNERS OF SLAB TO 1/4" RADIUS.
6. ABRASIVE STAIR NOSING: PROVIDE 2" CLEAR BETWEEN END OF STAIR NOSING AND VERTICAL/INSIDE FACE OF STAIR STRINGER. TOOL A GROOVE, 1/8" WIDE BY FULL WIDTH AND THICKNESS OF NOSING AT EACH END OF NOSING. CONTINUE TOOLED JOINT DOWN VERTICAL FACE OF NOSING AT RISER. FILL TOOLED GROOVE WITH SYNTHETIC RUBBER SEALING COMPOUND.
7. INSTALL CONCRETE ANCHORS MINIMUM 6" FROM BOTTOM AND 6" FROM SIDES/EDGES OF CONCRETE.
8. CONNECTION TO CONCRETE SHOWN. SEE DETAIL AC121/TYP FOR CONNECTION AT METAL FRAMING.

AC111 TYP — STAIRS - ALUMINUM - THREE RAIL

NS — SHEET 3 OF 3 — 02/16/21

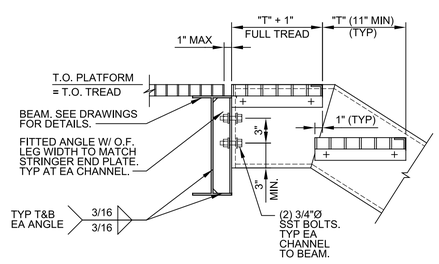

A / - CONNECTION TO BEAM

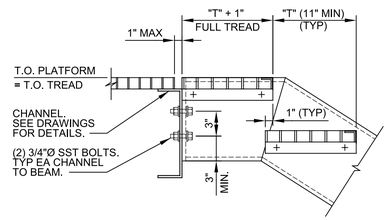

B / - CONNECTION TO ALUMINUM CHANNEL

NOTES:

1. INSTALL ISOLATION SLEEVES AND DIELECTRIC BREAKS BETWEEN DISSIMILAR METALS. SEE SPECIFICATIONS.

AC120 TYP — STAIRS - ALUMINUM - FLUSH TOP

NS — 06/21/19

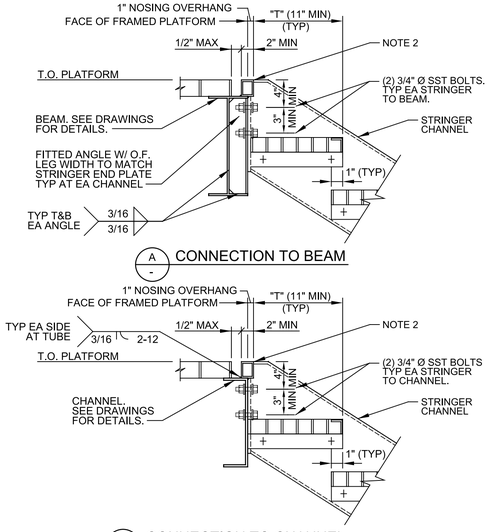

A / - CONNECTION TO BEAM

B / - CONNECTION TO CHANNEL

NOTES:

1. INSTALL ISOLATION SLEEVES AND DIELECTRIC BREAKS BETWEEN DISSIMILAR METALS. SEE SPECIFICATIONS.
2. TUBE NOSING. TUBE LENGTH = WIDTH BETWEEN CHANNELS MINUS 1/2" EACH END ("W"-1"). WELD TO TOP AND VERTICAL FACE OF BEAM OR CHANNEL. COAT TOP AND VERTICAL OUTSIDE FACE OF TUBE WITH NON-SLIP ABRASIVE.

AC121 TYP — STAIRS - ALUMINUM - TOP

NS — 06/21/19

REV	DATE	BY	DESCRIPTION
			CONFORMED DOCUMENTS

DESIGNED KMD
DRAWN KRJ
CHECKED DMH
DATE NOVEMBER 2022

** ORIGINAL SEALED BY KWASI DUOSE 06-10-22 TX PE 100650 **

carollo® TBPELS No. F-882

CITY OF AUSTIN — FOUNDED 1839

CITY OF AUSTIN

CITY OF AUSTIN
WILD HORSE RANCH WWTP EXPANSION
TYPICAL DETAILS
ARCHITECTURAL
TYPICAL DETAILS 1

VERIFY SCALES
BAR IS ONE INCH ON ORIGINAL DRAWING
0 1"
IF NOT ONE INCH ON THIS SHEET, ADJUST SCALES ACCORDINGLY

JOB NO. 10976A.00
DRAWING NO. 00TA01
SHEET NO. 39 OF 464

PROJECT NO. 10976A10 FILE NAME: 10976A1000TA001.dgn

LAST SAVED BY: idietzel Model: Layout1 ColorTable: gshade.ctb DesignScript: Carollo_Std_Pen_v0905.pen PlotScale: 1:1 Plot Date: 10-OCT-2022 8:12:10 AM User: LDietzel

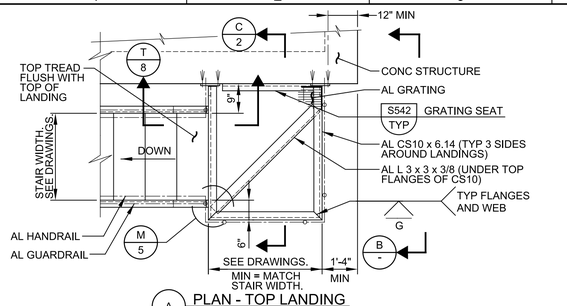

A PLAN - TOP LANDING

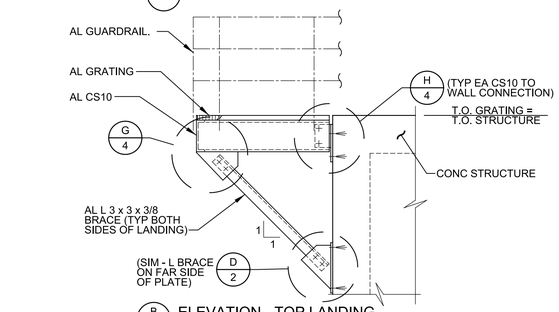

B - ELEVATION - TOP LANDING

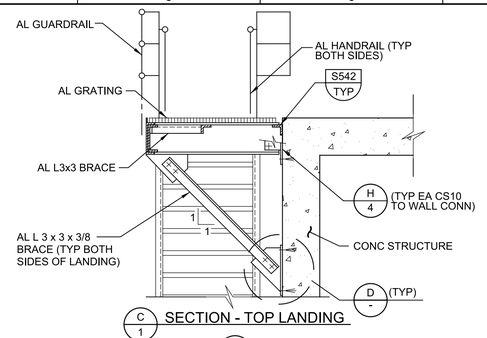

C 1 SECTION - TOP LANDING

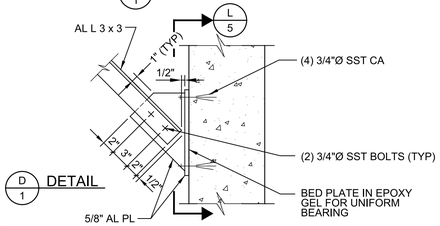

D 1 DETAIL

NOTES:

1. BEFORE DRILLING CONCRETE FOR ANCHORS, LAY OUT ALL ANCHOR PLATES AND HOLES. FIELD LOCATE REINFORCEMENT WITHIN 6" OF EACH HOLE. ADJUST PLATE LOCATIONS HORIZONTALLY TO AVOID MAXIMUM NUMBER OF BARS.
2. COAT ALUMINUM SURFACES IN CONTACT WITH CONCRETE, AND INSTALL ISOLATION SLEEVES AND WASHERS AT DISSIMILAR METALS, AS SPECIFIED.

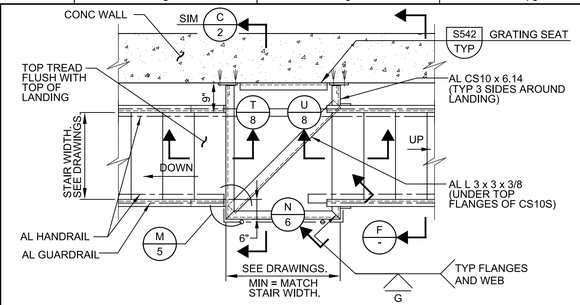

E PLAN - INTERMEDIATE LANDING

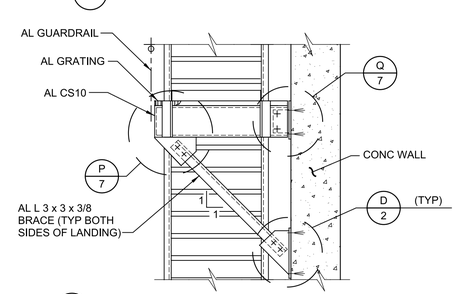

F - SECTION - INTERMEDIATE LANDING

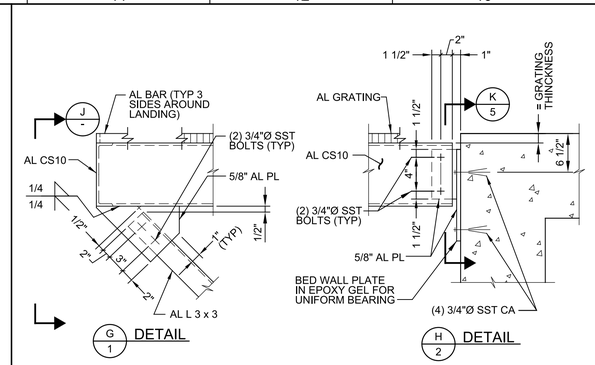

G 1 DETAIL

H 2 DETAIL

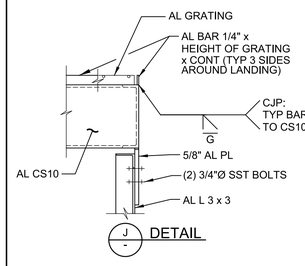

J - DETAIL

THIS CONFORMED DOCUMENT IS RELEASED FOR THE CONVENIENCE OF THE CONTRACTOR UNDER THE AUTHORITY OF:

DANNY M HURTADO, P.E. TX LIC NO. 104266 — 11-01-22 DATE

SEE DISCLAIMER FOR LIMITATIONS OF USE.

CONTRACT DOCUMENTS DATED JUNE 10, 2022, AS PART OF THE BIDDING DOCUMENTS (DRAWINGS AND SPECIFICATIONS) AND SUBSEQUENTLY ISSUED ADDENDA HAVE BEEN MERGED INTO ONE CONFORMING SET OF DOCUMENTS FOR THE CONVENIENCE OF THE CONTRACTOR. IF INCONSISTENCIES OR AMBIGUITIES BETWEEN "CONFORMED" DOCUMENTS AND CONTRACT DOCUMENTS ARE FOUND, THE CONTRACT DOCUMENTS SHALL GOVERN.

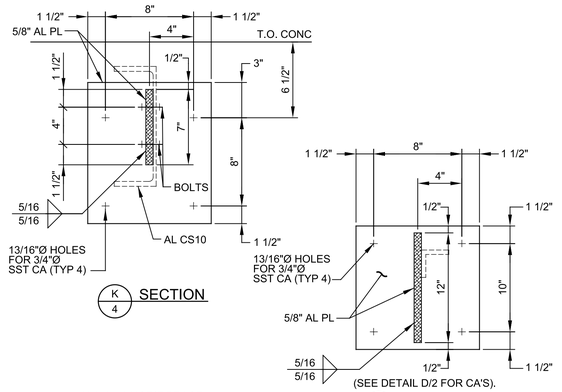

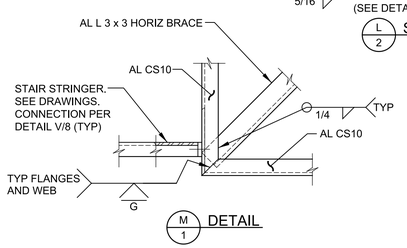

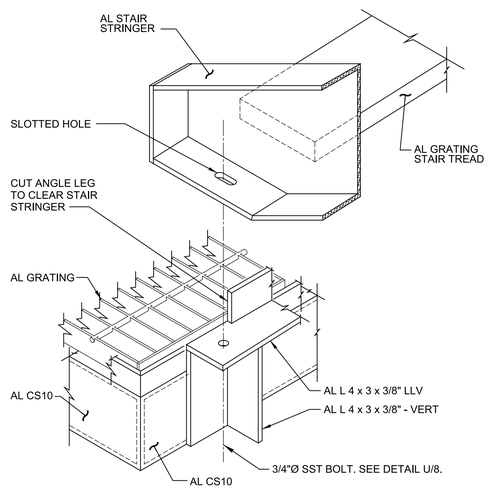

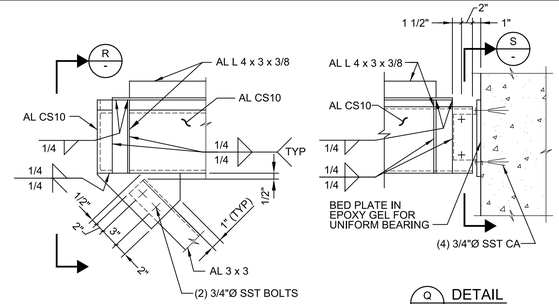

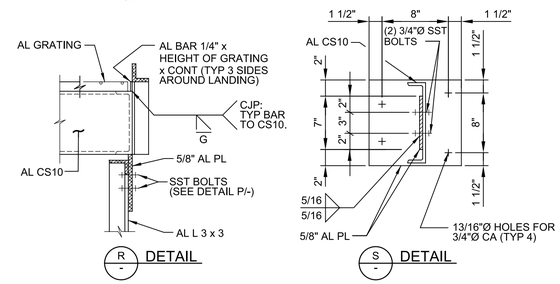

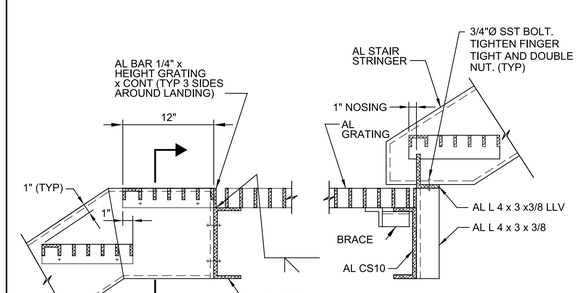

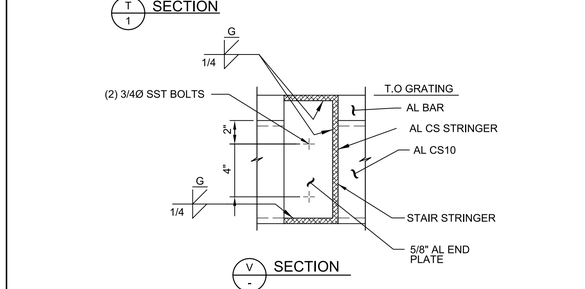

CONFORMED DOCUMENTS

REV	DATE	BY	DESCRIPTION

DESIGNED KMD
DRAWN KRJ
CHECKED DMH
DATE NOVEMBER 2022

** ORIGINAL SEALED BY KWASI DUOSE 06-10-22 TX PE 100650 **

carollo® TBPELS No. F-882

CITY OF AUSTIN

CITY OF AUSTIN
WILD HORSE RANCH WWTP EXPANSION
TYPICAL DETAILS
ARCHITECTURAL
TYPICAL DETAILS 2

VERIFY SCALES
BAR IS ONE INCH ON ORIGINAL DRAWING
0 1"
IF NOT ONE INCH ON THIS SHEET, ADJUST SCALES ACCORDINGLY

JOB NO. 10976A.00
DRAWING NO. 00TA02
SHEET NO. 40 OF 464

PROJECT NO. 10976A10 FILE NAME: 10976A1000TA002.dgn

Plot Date: 10-OCT-2022 8:16:12 AM
User: LDietzel
PlotScale: 1:1
DesignScript: Carollo_Std_Pen_v0905.pen
ColorTable: gshade.ctb
Model: Layout1
LAST SAVED BY: ldietzel

Plot Date: 10-OCT-2022 8:17:38 AM
User: LDietzel
PlotScale: 1:1
DesignScript: Carollo_Std_Pen_v0905.pen
ColorTable: gshade.ctb
Model: Layout1
LAST SAVED BY: ldietzel

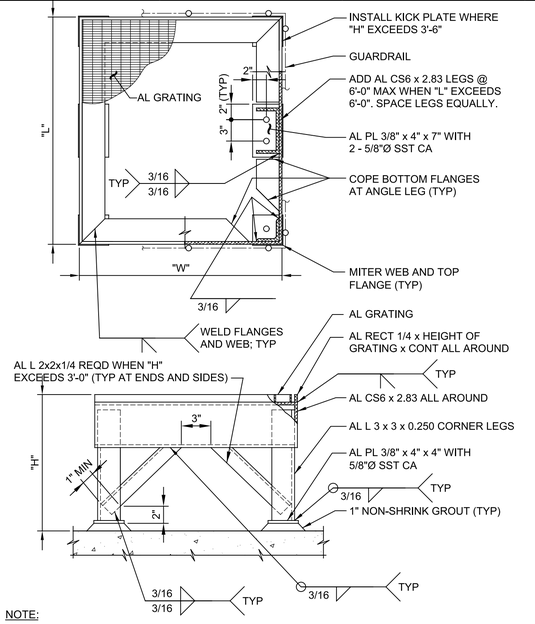

NOTE:

1. PLATFORM DIMENSIONS "L", "W" AND "H" ARE INDICATED ON THE DRAWINGS.

AC132 STAIRS - ALUMINUM - PLATFORM

TYP N 06/21/19

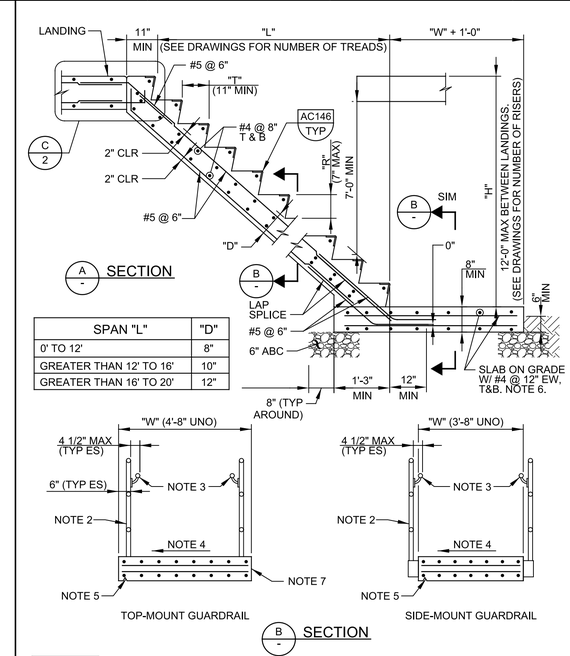

SPAN "L"	"D"
0' TO 12'	8"
GREATER THAN 12' TO 16'	10"
GREATER THAN 16' TO 20'	12"

AC143 STAIRS - CONCRETE

TYP NS SHEET 1 OF 2 06/21/19

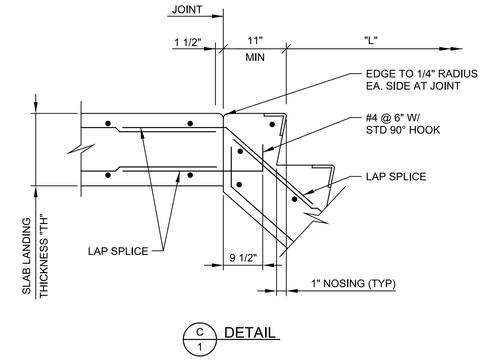

NOTES:

1. SEE DRAWINGS FOR DIMENSIONS "H", "L", "R", "T", "W" AND "TH".
2. SEE DETAIL AC500/TYP FOR GUARDRAIL/HANDRAIL NOTES. SEE DRAWINGS FOR GUARDRAIL/HANDRAIL TYPE AND MATERIAL.
3. PROVIDE HANDRAIL AT EACH SIDE OF STAIR.
4. AT EXTERIOR STAIRS AND BOTTOM LANDING, PROVIDE CROSS SLOPE OF 1/8" PER FOOT TO DRAIN PERPENDICULAR TO TRAFFIC AND AWAY FROM STRUCTURE.
5. AT EXTERIOR STAIR, PROVIDE DRIP GROOVE. SEE DETAIL S160/TYP-SIMILAR.
6. AT EXTERIOR STAIR, PROVIDE LANDING SLAB ON GRADE UNLESS OTHERWISE NOTED. EDGE TOP CORNERS OF SLAB TO 1/4" RADIUS.
7. WHERE STAIR IS CAST ADJACENT TO WALL, PROVIDE 1" CLEAR SEPARATION.

AC143 STAIRS - CONCRETE

TYP NS SHEET 2 OF 2 06/21/19

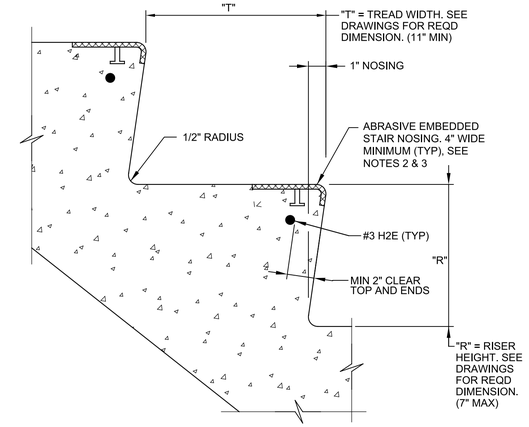

NOTES:

1. ANY FASTENERS FOR THE STAIR NOSING SHALL BE TYPE 304 OR 316 SST.
2. PROVIDE 4" BETWEEN END OF STAIR NOSING AND EDGE OF CONCRETE STEP. EMBEDDED STUD FOR STAIR NOSING SHOULD BE NO CLOSER THAN 6" FROM END OF THE STEP.
3. TOOL A GROOVE, 1/8" WIDE BY FULL WIDTH AND THICKNESS OF EMBEDDED NOSING, AT EACH END OF NOSING INCLUDING VERTICAL FACE AT RISER. FILL GROOVE WITH SYNTHETIC RUBBER SEALING COMPOUND.

AC146 STAIRS - CONCRETE - STEP

TYP S 06/21/19

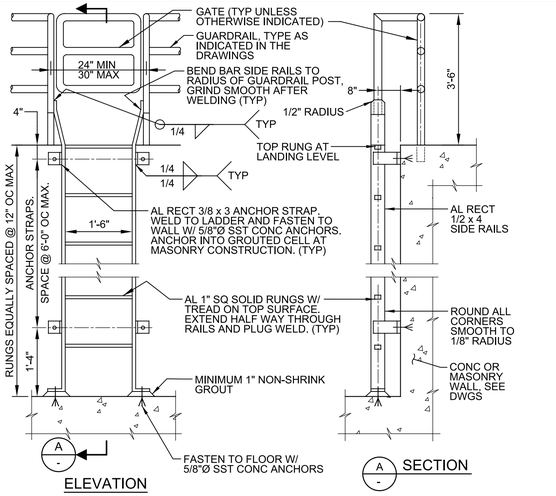

NOTES:

1. INSTALL FALL PREVENTION SYSTEM PER SPEC WHERE HEIGHT OF LADDER EXCEEDS 24'-0".
2. MINIMUM CLEARANCE TO ANY OBSTRUCTION ADJACENT TO LADDER: 2'-6" ON CLIMBING SIDE (2'-3" AT SMOOTH WALL). 1'-3" EACH SIDE OF CENTER LINE, ON EACH SIDE OF LADDER.
3. COAT ALL AL SURFACES IN CONTACT W/ CONC AND MASONRY, AND INSTALL ISOLATION SLEEVES AND WASHERS AT DISSIMILAR METALS, AS SPECIFIED.
4. WHERE GUARDRAIL IS SST, BOLT PIPE TO RAIL W/ 2 - 1/2"Ø SST BOLTS.

AC300 LADDER - ALUMINUM - WALL

TYP S 12/28/20

NOTES:

1. PROVIDE GUARDRAILS AT STAIRS AND AT OPEN SIDED WALKING SURFACES THAT ARE ELEVATED MORE THAN 30" ABOVE GRADE OR ADJACENT CONSTRUCTION.
2. WHERE EQUIPMENT IS LOCATED LESS THAN 10' FROM EDGE OF ROOF AND ELEVATED MORE THAN 30" ABOVE GRADE OR ADJACENT CONSTRUCTION, PROVIDE 42" HIGH GUARDRAIL FORMING A PROTECTIVE BARRIER. PARAPET WALL 42" OR MORE IN HEIGHT MAY BE THE GUARDRAIL AT ROOF LOCATIONS.
3. SEE DRAWINGS AND SPECIFICATIONS FOR GUARDRAIL MATERIAL TYPE(S).
4. PROVIDE HANDRAIL AT BOTH SIDES OF EVERY STAIR HAVING 2 OR MORE RISERS.
5. PROVIDE CONTINUOUS HANDRAIL GRIPPING SURFACES FOR THE FULL LENGTH OF THE STAIR.
6. PROVIDE HANDRAIL EXTENSIONS AT BOTH SIDES OF STAIRS AT TOP AND BOTTOM. HANDRAIL EXTENSION ON STAIR MOUNTED GUARDRAIL MAY BE OMITTED WHERE IT IS PERPENDICULAR TO AND IMPEDES EXIT FLOW.
7. MAKE INSIDE HANDRAIL ON SWITCHBACK STAIRS CONTINUOUS.
8. FOR WALL MOUNTED HANDRAILS, PROVIDE SINGLE RAIL WITH TOP OF RAIL AT 2'-10" HEIGHT ABOVE LANDINGS OR TREAD NOSINGS. PROVIDE MATCHING HANDRAIL ON OPPOSITE SIDE.
9. GUARDRAIL SHALL BE FIXED UNLESS OTHERWISE INDICATED ON THE DRAWINGS.
10. PLACE CENTER OF EMBEDDED POSTS 6" FROM EDGE OF CONCRETE AND 6" FROM FRONT EDGE OF CONCRETE STAIR NOSINGS UNLESS OTHERWISE INDICATED ON THE DRAWINGS.
11. PLACE GUARDRAIL POSTS OPPOSITE EACH OTHER WHERE RAILINGS ARE PARALLEL.
12. FOR GUARDRAIL POSTS MOUNTED TO BEAM OR STAIR CHANNEL, PROVIDE MANUFACTURERS REINFORCED CONNECTION FROM POST TO PLATE. PLATE AND REINFORCED INSERTS SHALL BE ALUMINUM OR STAINLESS STEEL.
13. PROVIDE SLIDING JOINTS AT 24' MAX SPACING FOR EXPANSION OF RAIL AND KICKPLATE. LOCATE SLIDING JOINTS NEAR FACE OF POST. GAP AT TIME OF INSTALLATION SHALL BE BASED ON TEMPERATURE OF GUARDRAIL. PROVIDE 1/4" GAP AT 100°F AND 5/8" GAP AT 0°F. INTERPOLATE GAP FOR OTHER INSTALLATION TEMPERATURES. AT CONCRETE EXPANSION JOINTS, PROVIDE MINIMUM 1" GAP IN SLIDING JOINTS BUT NOT LESS THAN WIDTH OF CONCRETE EXPANSION JOINT. MAKE INSERT SLEEVES IN RAILS LONG ENOUGH TO ALLOW FOR THE FULL RANGE OF MOVEMENT.
14. MATERIAL FOR KICKPLATE CHANNEL SLIDING JOINT PLATES, SHALL BE OF THE SAME MATERIAL AS THE GUARDRAIL.
15. JOINTS FOR STAINLESS STEEL GUARDRAIL AND HANDRAIL SHALL BE COPED, WELDED, AND GROUND SMOOTH.
16. PROVIDE KICKPLATE AT ALL LOCATIONS EXCEPT AT SLOPING GUARDRAIL ON STAIRS AND WHERE GUARDRAIL IS MOUNTED ON A 4" MIN CURB. KICKPLATE MAY BE EXTRUDED OR BENT PLATE AND SHALL BE ATTACHED WITH SST BOLTS IN 5/16" x 3/4" SLOTTED HOLES. BOLT KICKPLATE TO POST WITH BOTTOM 1/4" CLEAR ABOVE FLOOR. FOR SIDE MOUNTED GUARDRAIL, PROVIDE STANDARD SPACER BLOCK BETWEEN POST AND KICKPLATE TO MAINTAIN 1/4" MAX CLEAR SPACING. HAND TIGHTEN AND CENTER PUNCH BOLT THREADS TO LOCK.
17. COAT SURFACES OF ALUMINUM IN CONTACT WITH CONCRETE AS SPECIFIED. PROVIDE NEOPRENE GASKET BETWEEN ALUMINUM AND STEEL.

AC500 GUARDRAIL - HANDRAIL - NOTES

TYP NS 06/21/19

THIS CONFORMED DOCUMENT IS RELEASED FOR THE CONVENIENCE OF THE CONTRACTOR UNDER THE AUTHORITY OF:

DANNY M HURTADO, P.E. 11-01-22
TX LIC NO. 104266 DATE

SEE DISCLAIMER FOR LIMITATIONS OF USE.

CONTRACT DOCUMENTS DATED JUNE 10, 2022, AS PART OF THE BIDDING DOCUMENTS (DRAWINGS AND SPECIFICATIONS) AND SUBSEQUENTLY ISSUED ADDENDA HAVE BEEN MERGED INTO ONE CONFORMING SET OF DOCUMENTS FOR THE CONVENIENCE OF THE CONTRACTOR. IF INCONSISTENCIES OR AMBIGUITIES BETWEEN "CONFORMED" DOCUMENTS AND CONTRACT DOCUMENTS ARE FOUND, THE CONTRACT DOCUMENTS SHALL GOVERN.

REV	DATE	BY	DESCRIPTION
			CONFORMED DOCUMENTS

DESIGNED KMD
DRAWN KRJ
CHECKED DMH
DATE NOVEMBER 2022

** ORIGINAL SEALED BY KWASI DUOSE 06-10-22 TX PE 100650 **

carollo® TBPELS No. F-882

CITY OF AUSTIN — FOUNDED 1839

CITY OF AUSTIN

CITY OF AUSTIN
WILD HORSE RANCH WWTP EXPANSION
TYPICAL DETAILS
ARCHITECTURAL
TYPICAL DETAILS 3

VERIFY SCALES
BAR IS ONE INCH ON ORIGINAL DRAWING
0 1"
IF NOT ONE INCH ON THIS SHEET, ADJUST SCALES ACCORDINGLY

JOB NO. 10976A.00
DRAWING NO. 00TA03
SHEET NO. 41 OF 464

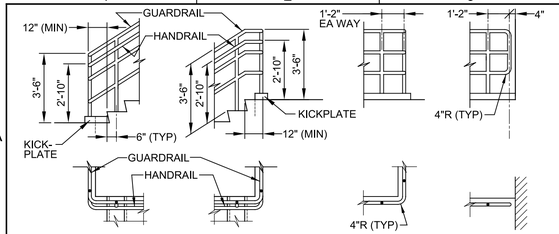

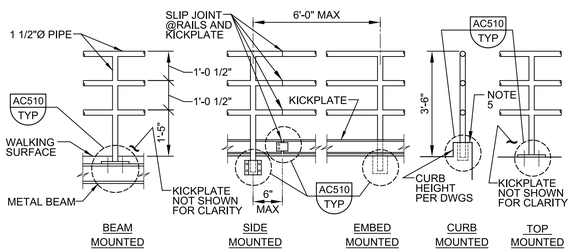

GUARDRAIL ELEVATION

AC504 TYP — GUARDRAIL - THREE RAIL

NS SHEET 1 OF 3 06/21/19

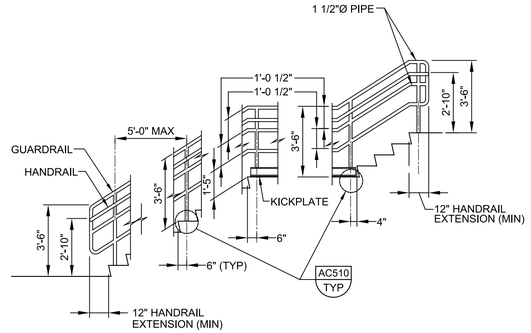

STAIR GUARDRAIL/HANDRAIL ELEVATION

NOTES:

1. THIS DETAIL IS APPLICABLE AT PRIVATE STAIRS IN F, H, AND S OCCUPANCIES WHERE OPERATOR ONLY ACCESS IS REQUIRED. DETAILS AND INSTALLATION SHALL COMPLY WITH THE BUILDING CODE.
2. SEE SPECIFICATIONS AND DETAIL AC500/TYP FOR ADDITIONAL REQUIREMENTS.
3. VARIOUS POST MOUNTING DETAILS ARE ILLUSTRATED. SEE DRAWINGS AND DETAIL AC510/TYP FOR SPECIFIC MOUNTING REQUIREMENTS.
4. HANDRAIL EXTENSIONS ARE REQUIRED ON BOTH SIDES OF STAIR, EXCEPT WHERE INSIDE HANDRAIL IS CONTINUOUS AT SWITCHBACK STAIR.
5. AT CURB, USE EMBEDDED OR TOP MOUNTED POST AS INDICATED ON THE DRAWINGS.

AC504 TYP — GUARDRAIL - THREE RAIL

NS SHEET 2 OF 3 06/21/19

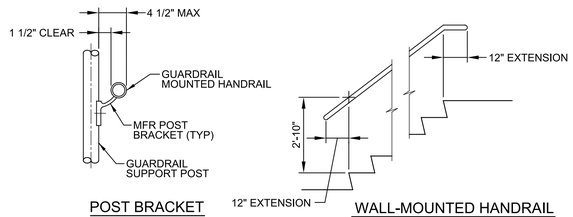

HANDRAIL DETAILS

AC504 TYP — GUARDRAIL - THREE RAIL

NS SHEET 3 OF 3 06/21/19

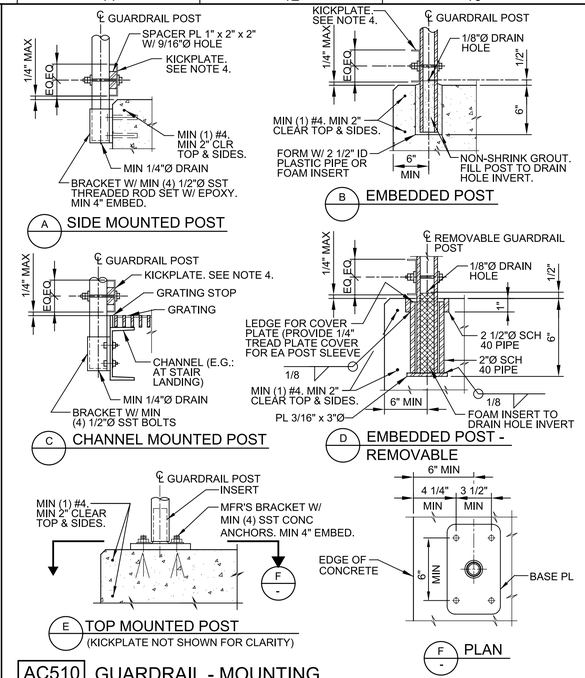

AC510 TYP — GUARDRAIL - MOUNTING

NS SHEET 1 OF 2 06/21/19

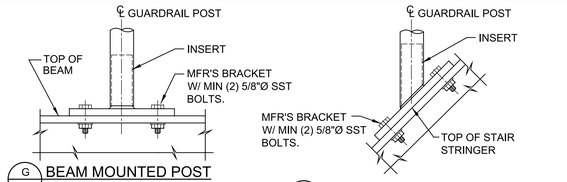

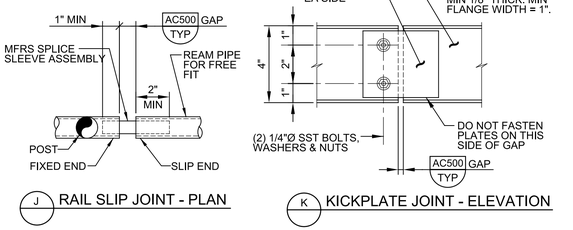

NOTES:

1. FOR ADDITIONAL REQUIREMENTS, SEE DETAIL AC500/TYP.
2. SEE DRAWINGS FOR MATERIAL TYPES.
3. COAT ALUMINUM SURFACES IN CONTACT WITH CONCRETE OR DISSIMILAR METALS AS SPECIFIED.
4. KICKPLATE CONNECTION AT POST: MIN 3/4" HORIZONTAL SLOTTED HOLE IN CHANNEL W/ MIN 1/4"Ø BOLT. PROVIDE WASHER AND DOUBLE NUTS. INSIDE NUT FINGER-TIGHT TO PERMIT EXPANSION AND CONTRACTION.

AC510 TYP — GUARDRAIL - MOUNTING

NS SHEET 2 OF 2 06/21/19

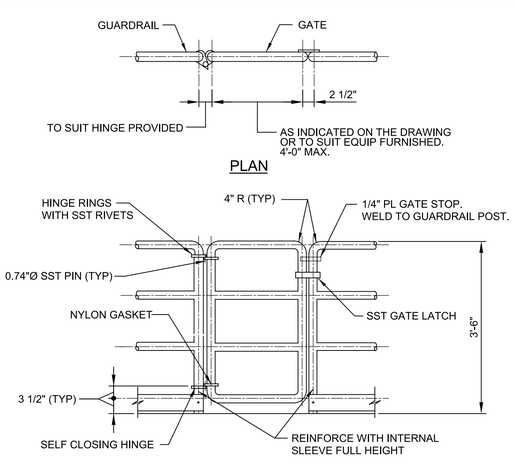

NOTES:

1. GATE MATERIAL AND FINISH SHALL MATCH GUARDRAIL.
2. GATE SHALL OPEN TOWARD THE WALKWAY.

AC514 TYP — GUARDRAIL - GATE - THREE RAIL

S 06/21/19

THIS CONFORMED DOCUMENT IS RELEASED FOR THE CONVENIENCE OF THE CONTRACTOR UNDER THE AUTHORITY OF:

DANNY M HURTADO, P.E. 11-01-22
TX LIC NO. 104266 DATE

SEE DISCLAIMER FOR LIMITATIONS OF USE.

CONTRACT DOCUMENTS DATED JUNE 10, 2022, AS PART OF THE BIDDING DOCUMENTS (DRAWINGS AND SPECIFICATIONS) AND SUBSEQUENTLY ISSUED ADDENDA HAVE BEEN MERGED INTO ONE CONFORMING SET OF DOCUMENTS FOR THE CONVENIENCE OF THE CONTRACTOR. IF INCONSISTENCIES OR AMBIGUITIES BETWEEN "CONFORMED" DOCUMENTS AND CONTRACT DOCUMENTS ARE FOUND, THE CONTRACT DOCUMENTS SHALL GOVERN.

REV	DATE	BY	DESCRIPTION
			CONFORMED DOCUMENTS

DESIGNED KMD
DRAWN KRJ
CHECKED DMH
DATE NOVEMBER 2022

** ORIGINAL SEALED BY KWASI DUOSE 06-10-22 TX PE 100650 **

carollo® TBPELS No. F-882

CITY OF AUSTIN — FOUNDED 1839

CITY OF AUSTIN

CITY OF AUSTIN
WILD HORSE RANCH WWTP EXPANSION
TYPICAL DETAILS
ARCHITECTURAL
TYPICAL DETAILS 4

VERIFY SCALES
BAR IS ONE INCH ON ORIGINAL DRAWING
0 1"
IF NOT ONE INCH ON THIS SHEET, ADJUST SCALES ACCORDINGLY

JOB NO. 10976A.00
DRAWING NO. 00TA04
SHEET NO. 42 OF 464

PROJECT NO. 10976A10 FILE NAME: 10976A1000TA004.dgn

Plot Date: 10-OCT-2022 8:19:07 AM
User: LDietzel
PlotScale: 1:1
DesignScript: Carollo_Std_Pen_v0905.pen
ColorTable: gshade.ctb
Model: Layout1
LAST SAVED BY: ldietzel

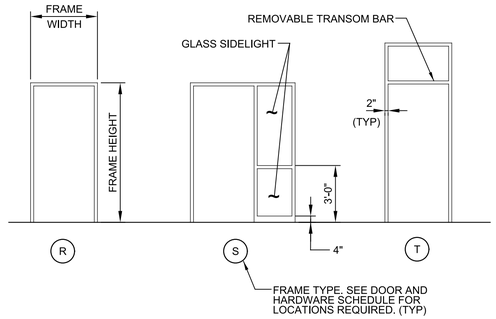

NOTES:

1. SEE DOOR AND HARDWARE SCHEDULE FOR FRAME SIZE, MATERIAL, AND DETAILS.
2. SIDELIGHT MAY BE ON EITHER SIDE OF DOOR. SEE DRAWINGS FOR REQUIRED SIDELIGHT LOCATION.
3. GLASS AT SIDELIGHTS SHALL BE TEMPERED.
4. GLASS AT INTERIOR SIDELIGHTS SHALL BE CLEAR. GLASS AT EXTERIOR SIDELIGHTS SHALL BE TINTED INSULATING GLASS.

AJ100 TYP — DOOR - FRAME - STICK

06/21/19

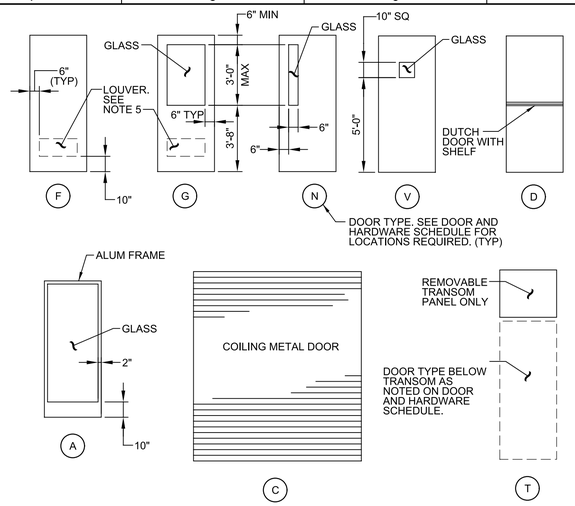

NOTES:

1. DOOR SIZE AND TYPE SHALL BE IN ACCORDANCE WITH DOOR AND HARDWARE SCHEDULE.
2. GLASS AT DOORS SHALL BE TEMPERED UNLESS OTHERWISE INDICATED ON THE DRAWINGS.
3. GLASS AT INTERIOR DOORS SHALL BE CLEAR. GLASS AT EXTERIOR DOORS SHALL BE TINTED.
4. PROVIDE WIRE GLASS AT LABELED DOORS.
5. LOUVER MAY BE REQD AT ANY DOOR TYPE. IF A LOUVER IS REQUIRED, SIZES AND LOCATIONS WILL BE NOTED ON DOOR AND HARDWARE SCHEDULE.
6. PROVIDE LABELED DOORS IN ACCORDANCE WITH DOOR AND HARDWARE SCHEDULE.

AJ103 TYP — DOOR - ELEVATIONS - TYPES

06/21/19

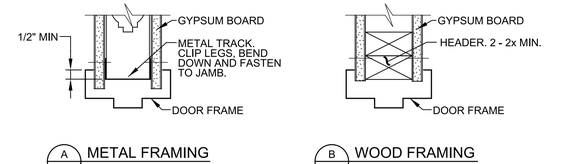

AJ105 TYP — DOOR - HEAD - DETAILS

06/21/19

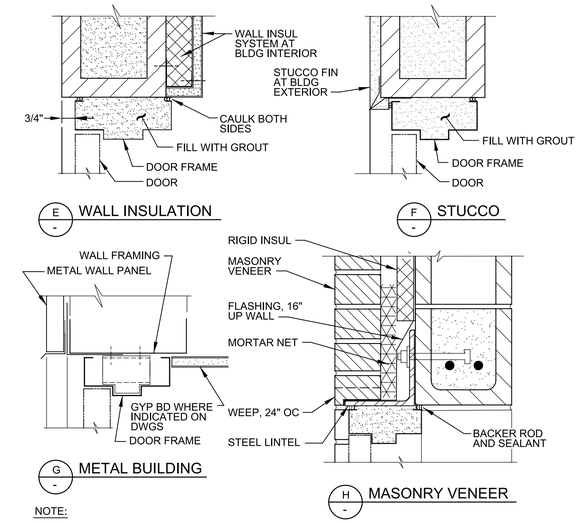

NOTE:

1. DOOR AND FRAME SIZE AND MATERIAL SHALL BE IN ACCORDANCE WITH DOOR AND HARDWARE SCHEDULE.
2. FRAME DIMENSIONS SHALL MATCH THOSE OF JAMB DETAILS ON AJ107/TYP.
3. SEE SPEC FOR WALL INSULATION SYSTEM DETAILS.
4. SEE STRUCT DRAWINGS FOR LINTEL DETAILS.

AJ105 TYP — DOOR - HEAD - DETAILS

SHEET 2 OF2 06/21/19

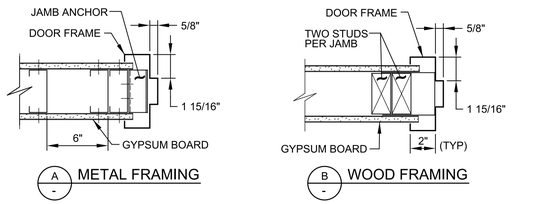

AJ107 TYP — DOOR - JAMB - DETAILS

SHEET 1 OF 2 06/21/19

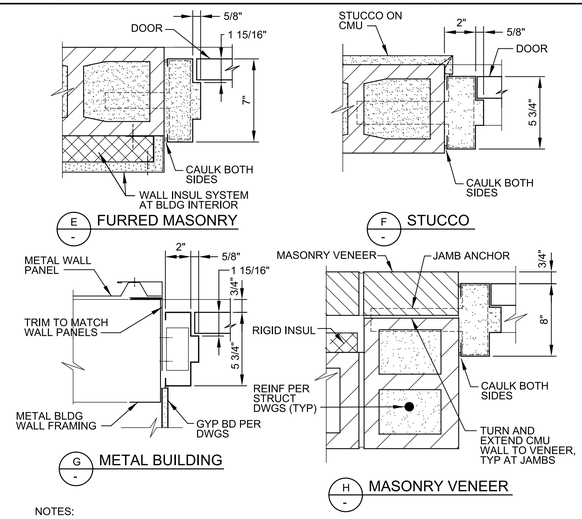

NOTES:

1. DOOR AND FRAME SIZE AND MATERIAL SHALL BE IN ACCORDANCE WITH DOOR AND HARDWARE SCHEDULE.
2. PROVIDE 2" FRAME WIDTH, 5 3/4" FRAME DEPTH AND 1/2" BACKBEND TYPICAL UNLESS OTHERWISE SHOWN OR SCHEDULED.
3. PROVIDE MINIMUM 3 ANCHORS PER JAMB AT MASONRY AND 4 ANCHORS PER JAMB AT STUD OR CONCRETE CONSTRUCTION. FILL FRAMES IN MASONRY WITH GROUT.

AJ107 TYP — DOOR - JAMB - DETAILS

SHEET 2 OF 2 06/21/19

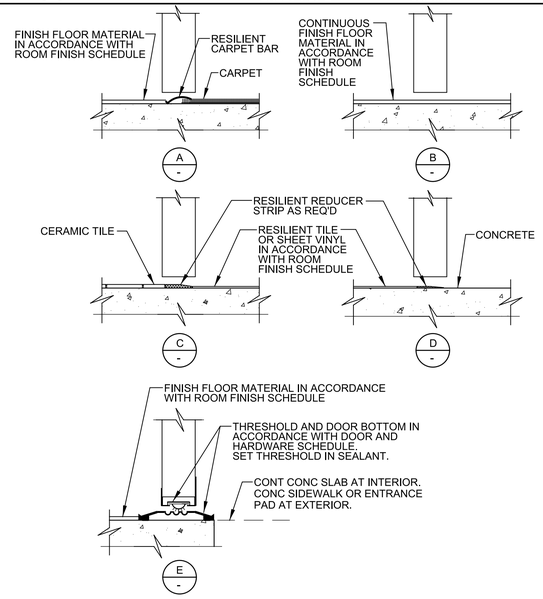

NOTE:

1. DOOR CLEARANCE AT BOTTOM OF DOOR SHALL BE 1/4" MIN AND 3/8" MAX.

AJ109 TYP — DOOR - SILL - DETAILS

06/21/19

THIS CONFORMED DOCUMENT IS RELEASED FOR THE CONVENIENCE OF THE CONTRACTOR UNDER THE AUTHORITY OF:

11-01-22

DANNY M HURTADO, P.E. DATE
TX LIC NO. 104266

SEE DISCLAIMER FOR LIMITATIONS OF USE.

CONTRACT DOCUMENTS DATED JUNE 10, 2022, AS PART OF THE BIDDING DOCUMENTS (DRAWINGS AND SPECIFICATIONS) AND SUBSEQUENTLY ISSUED ADDENDA HAVE BEEN MERGED INTO ONE CONFORMING SET OF DOCUMENTS FOR THE CONVENIENCE OF THE CONTRACTOR. IF INCONSISTENCIES OR AMBIGUITIES BETWEEN "CONFORMED" DOCUMENTS AND CONTRACT DOCUMENTS ARE FOUND, THE CONTRACT DOCUMENTS SHALL GOVERN.

CONFORMED DOCUMENTS

REV	DATE	BY	DESCRIPTION

DESIGNED KMD
DRAWN KRJ
CHECKED DMH
DATE NOVEMBER 2022

** ORIGINAL SEALED BY KWASI DUOSE 06-10-22 TX PE 100650 **

carollo® TBPELS No. F-882

CITY OF AUSTIN

CITY OF AUSTIN
WILD HORSE RANCH WWTP EXPANSION
TYPICAL DETAILS
ARCHITECTURAL
TYPICAL DETAILS 5

VERIFY SCALES
BAR IS ONE INCH ON ORIGINAL DRAWING
0 1"
IF NOT ONE INCH ON THIS SHEET, ADJUST SCALES ACCORDINGLY

JOB NO. 10976A.00
DRAWING NO. 00TA05
SHEET NO. 43 OF 464

PROJECT NO. 10976A10 FILE NAME: 10976A1000TA005.dgn

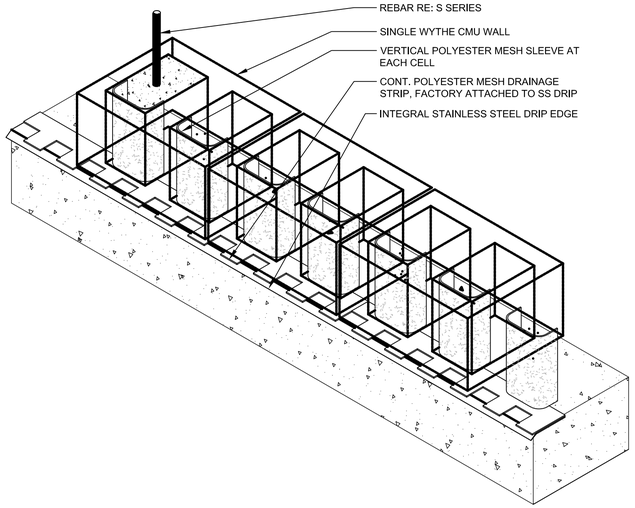

4 SINGLE WYTHE CMU WALL DRAINAGE SYSTEM

00TA06

SCALE: NTS
FILE: A900.dwg

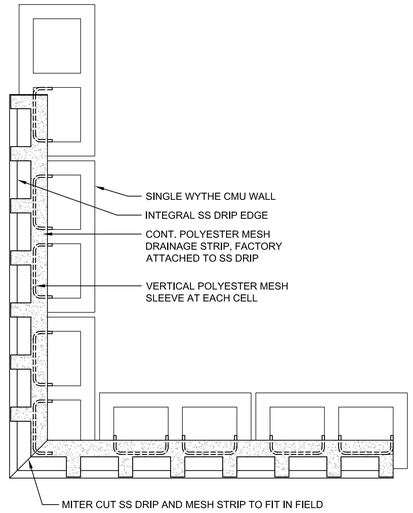

5 PLAN DETAIL SINGLE WYTHE CMU WALL DRAINAGE SYSTEM

00TA06

SCALE: NTS
FILE: A901.dwg

THIS CONFORMED DOCUMENT IS RELEASED FOR THE CONVENIENCE OF THE CONTRACTOR UNDER THE AUTHORITY OF:

DAVID NEGRETE, R.A.
TX LIC NO. 11640

11-01-22
DATE

SEE DISCLAIMER FOR LIMITATIONS OF USE.

CONTRACT DOCUMENTS DATED JUNE 10, 2022, AS PART OF THE BIDDING DOCUMENTS (DRAWINGS AND SPECIFICATIONS) AND SUBSEQUENTLY ISSUED ADDENDA HAVE BEEN MERGED INTO ONE CONFORMING SET OF DOCUMENTS FOR THE CONVENIENCE OF THE CONTRACTOR. IF INCONSISTENCIES OR AMBIGUITIES BETWEEN "CONFORMED" DOCUMENTS AND CONTRACT DOCUMENTS ARE FOUND, THE CONTRACT DOCUMENTS SHALL GOVERN.

EXTERIOR

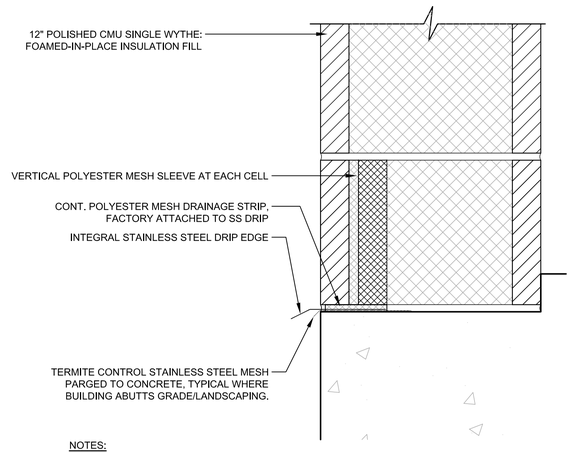

NOTES:

1. VERIFY ALL SLAB SETBACK AND DROP DIMENSIONS WITH STRUCTURAL DRAWINGS.
2. MASONRY DRAINAGE SYSTEM TO BE USED AT ADMINISTRATION BUILDING (90) WALLS ONLY.
3. RE: TYPICAL DETAILS A900 & A901

6 DETAIL @ SINGLE WYTHE MASONRY WALL BASE

00TA06

SCALE: NTS
FILE: A902.dwg

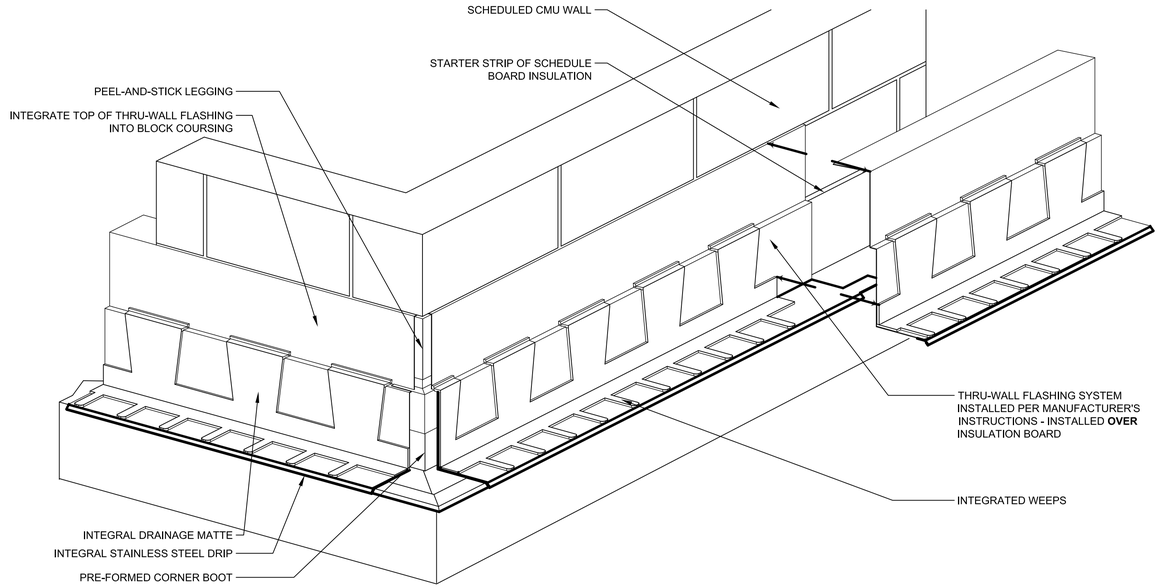

1 ISOMETRIC THRU-WALL FLASHING SYSTEM DETAIL @ VENEER WALL

00TA06

SCALE: NTS
FILE: A900.dwg

EXT. SIDE

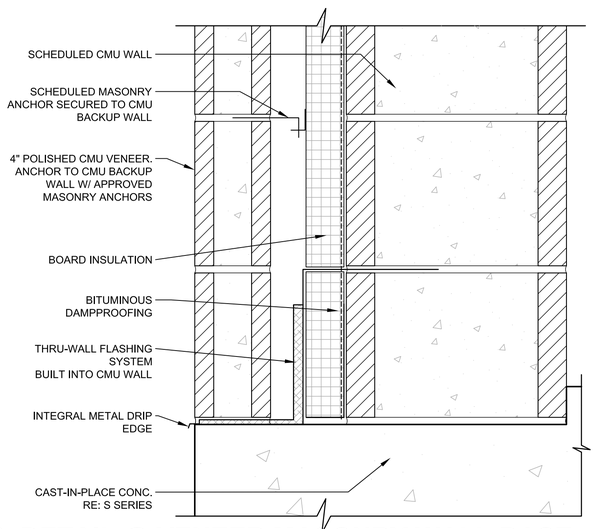

2 DETAIL @ VENEER MASONRY WALL BASE

00TA06

SCALE: NTS
FILE: A902.dwg

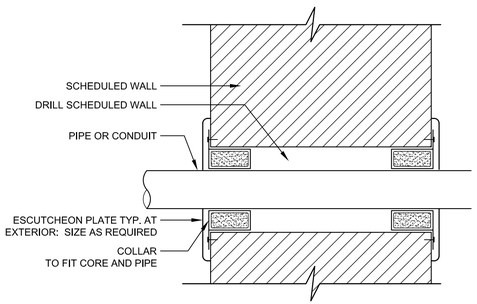

NOTES:

1. RE: ARCH PLANS FOR WALL TYPES
2. FULLY GROUT ALL CELLS AT CMU WALL PENETRATIONS
3. RE: E-, H- AND M- SERIES DWGS FOR PENETRATION LOCATIONS

3 PIPE/CONDUIT PENETRATION DTL

00TA06

SCALE: NTS
FILE: A903.dwg

REV	DATE	BY	DESCRIPTION
			CONFORMED DOCUMENTS

DESIGNED JTG
DRAWN JTG
CHECKED JTG
DATE NOVEMBER 2022

** ORIGINAL SEALED BY DAVID NEGRETE 06-10-22 TX RA 11640 **

NEGRETE & KOLAR ARCHITECTS,LLP
11720 NORTH IH 35, AUSTIN TEXAS 78753 P: 512.474.6526

carollo® TBPELS No. F-882

CITY OF AUSTIN

CITY OF AUSTIN
WILD HORSE RANCH WWTP EXPANSION
TYPICAL DETAILS
ARCHITECTURAL TYPICAL DETAILS 6

VERIFY SCALES
BAR IS ONE INCH ON ORIGINAL DRAWING
0 1"
IF NOT ONE INCH ON THIS SHEET, ADJUST SCALES ACCORDINGLY

JOB NO. 10976A.00
DRAWING NO. 00TA06
SHEET NO. 44 OF 464

LAST SAVED BY: Jason.George

PROJECT NO. 10976A10 FILE NAME: 10976A1000TA006.dwg

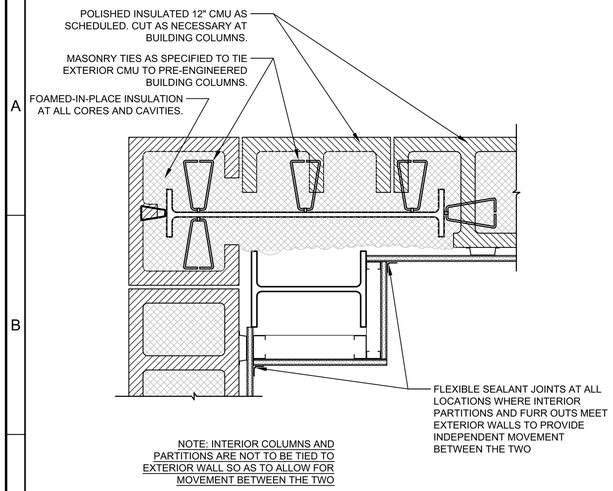

5 EXTERIOR CORNER PLAN DETAIL

00TA07 SCALE: NTS
FILE: A904.dwg

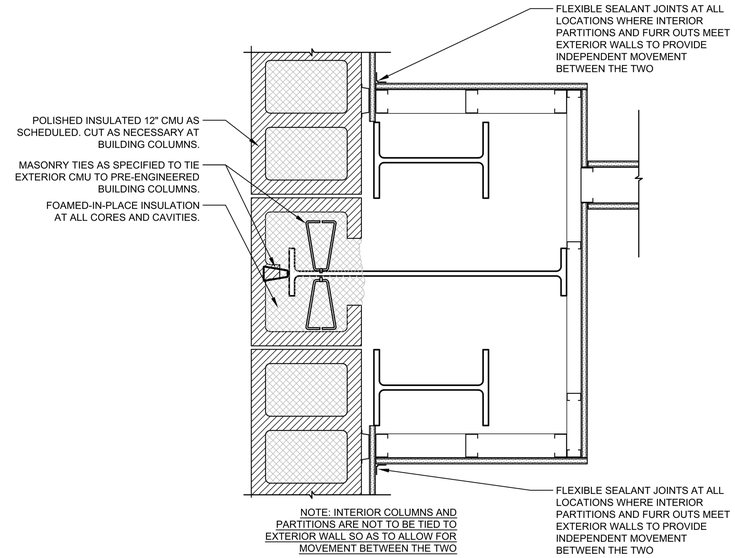

6 EXTERIOR PLAN DETAIL AT COLUMN

00TA07 SCALE: NTS
FILE: A905.dwg

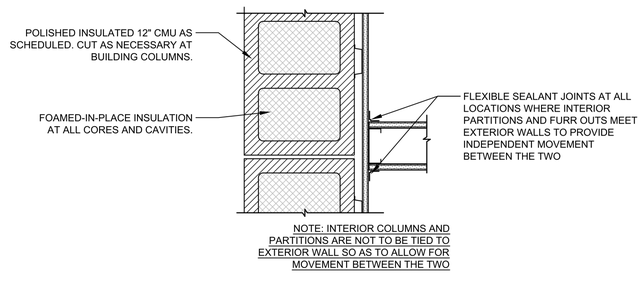

7 EXTERIOR PLAN DETAIL AT PARTITION

00TA07 SCALE: NTS
FILE: A909.dwg

THIS CONFORMED DOCUMENT IS RELEASED FOR THE CONVENIENCE OF THE CONTRACTOR UNDER THE AUTHORITY OF:

11-01-22

DAVID NEGRETE, R.A. DATE
TX LIC NO. 11640

SEE DISCLAIMER FOR LIMITATIONS OF USE.

CONTRACT DOCUMENTS DATED JUNE 10, 2022, AS PART OF THE BIDDING DOCUMENTS (DRAWINGS AND SPECIFICATIONS) AND SUBSEQUENTLY ISSUED ADDENDA HAVE BEEN MERGED INTO ONE CONFORMING SET OF DOCUMENTS FOR THE CONVENIENCE OF THE CONTRACTOR. IF INCONSISTENCIES OR AMBIGUITIES BETWEEN "CONFORMED" DOCUMENTS AND CONTRACT DOCUMENTS ARE FOUND, THE CONTRACT DOCUMENTS SHALL GOVERN.

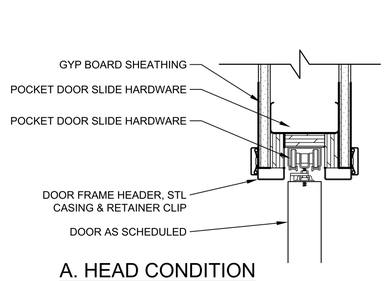

A. HEAD CONDITION

1 POCKET DOOR DETAILS

00TA07 SCALE: NTS
FILE: A900.dwg

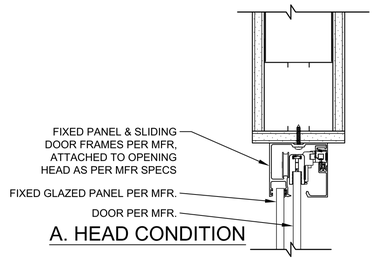

A. HEAD CONDITION

2 DEMOUNTABLE DOOR DETAILS

00TA07 SCALE: NTS
FILE: A900.dwg

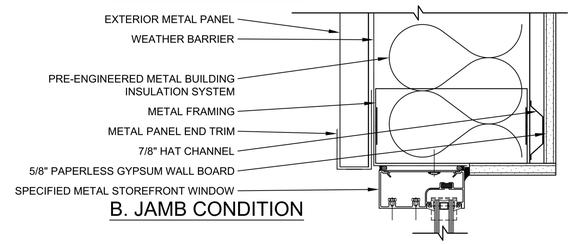

A. HEAD CONDITION

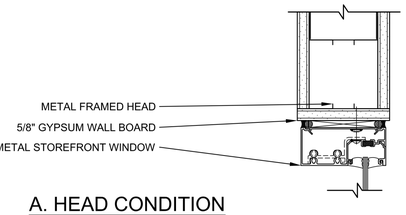

A. HEAD CONDITION

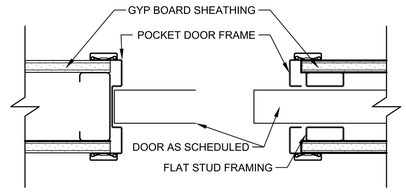

B. JAMB CONDITIONS

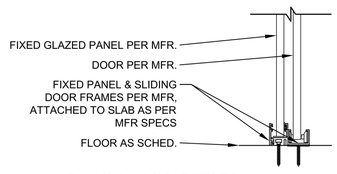

B. SILL CONDITION

3 EXTERIOR WINDOW DETAILS

00TA07 SCALE: NTS
FILE: A900.dwg

B. JAMB CONDITION

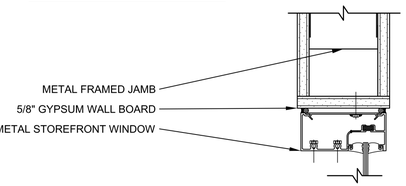

B. JAMB CONDITION

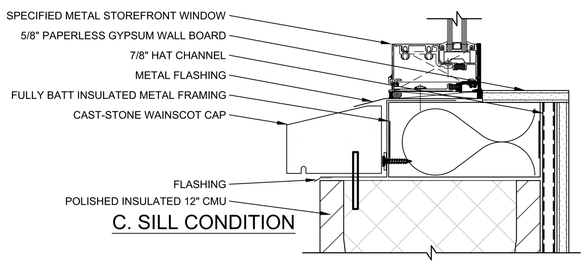

C. SILL CONDITION

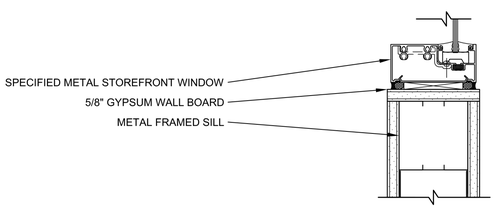

C. SILL CONDITION

4 INTERIOR WINDOW DETAILS

00TA07 SCALE: NTS
FILE: A900.dwg

REV	DATE	BY	DESCRIPTION
			CONFORMED DOCUMENTS

DESIGNED JTG
DRAWN JTG
CHECKED JTG
DATE NOVEMBER 2022

** ORIGINAL SEALED BY DAVID NEGRETE 06-10-22 TX RA 11640 **

NEGRETE & KOLAR ARCHITECTS,LLP
11720 NORTH IH 35, AUSTIN TEXAS 78753 P: 512.474.6526

carollo
TBPELS No. F-882

CITY OF AUSTIN

CITY OF AUSTIN
WILD HORSE RANCH WWTP EXPANSION
TYPICAL DETAILS
ARCHITECTURAL TYPICAL DETAILS 7

VERIFY SCALES
BAR IS ONE INCH ON ORIGINAL DRAWING
0 1"
IF NOT ONE INCH ON THIS SHEET, ADJUST SCALES ACCORDINGLY

JOB NO. 10976A.00
DRAWING NO. 00TA07
SHEET NO. 45 OF 464

LAST SAVED BY: Jason.George

PROJECT NO. 10976A10 FILE NAME: 10976A1000TA007.dwg

THIS CONFORMED DOCUMENT IS RELEASED FOR THE CONVENIENCE OF THE CONTRACTOR UNDER THE AUTHORITY OF:

DAVID NEGRETE, R.A. — DATE 11-01-22
TX LIC NO. 11640

SEE DISCLAIMER FOR LIMITATIONS OF USE.

CONTRACT DOCUMENTS DATED JUNE 10, 2022, AS PART OF THE BIDDING DOCUMENTS (DRAWINGS AND SPECIFICATIONS) AND SUBSEQUENTLY ISSUED ADDENDA HAVE BEEN MERGED INTO ONE CONFORMING SET OF DOCUMENTS FOR THE CONVENIENCE OF THE CONTRACTOR. IF INCONSISTENCIES OR AMBIGUITIES BETWEEN "CONFORMED" DOCUMENTS AND CONTRACT DOCUMENTS ARE FOUND, THE CONTRACT DOCUMENTS SHALL GOVERN.

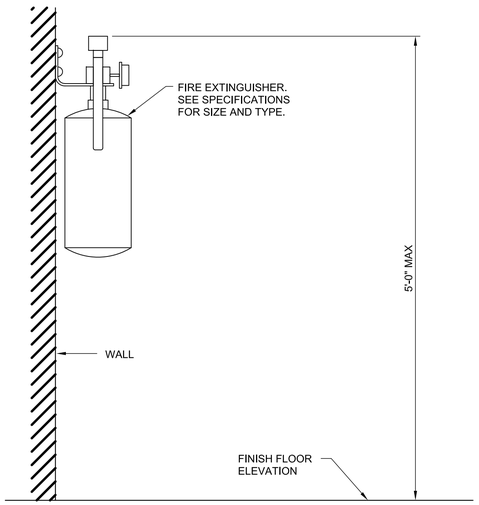

NOTES:

1. MOUNT TO WALL WITH NUMBER AND SIZE OF ANCHORS TO MATCH BRACKET. USE CONCRETE ANCHORS FOR MASONRY OR CONCRETE WALLS. INSTALL AT GROUTED MASONRY CELL. MOUNT TO STUD WITH LAG BOLTS, OR WOOD SCREWS FOR WOOD PARTITION WALL.
2. PAINT A 3' RED SQUARE ON THE WALL BEHIND THE EXTINGUISHER PER ANSI.

1 FIRE EXTINGUISHER

00TA08 SCALE: NTS
FILE: A906.dwg

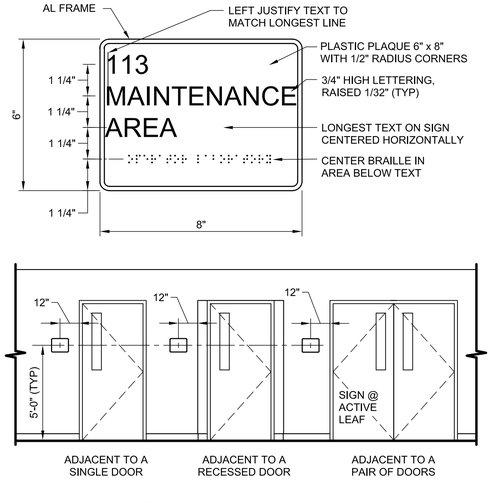

TYPICAL SIGN LOCATIONS

NOTES:

1. ALL PERMANENT SIGNAGE ON THE ACCESSIBLE ROUTE SHALL MEET ADA REQUIREMENT 4.30.
2. FOR SIGN QUANTITIES, SEE SIGN SCHEDULE.
3. LOCATE SIGNS AT LATCH SIDE OF DOOR. AT DOUBLE DOORS AND WHERE THERE IS NO WALL SPACE ADJACENT TO THE DOOR, PLACE SIGNS ON NEAREST ADJACENT WALL.

2 INTERIOR PLASTIC SIGNS

00TA08 SCALE: NTS
FILE: A907.dwg

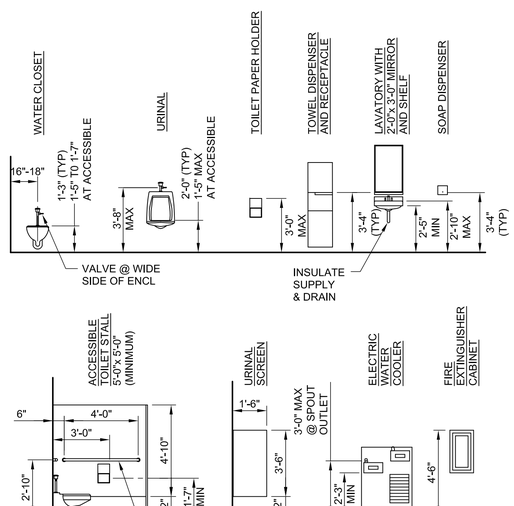

NOTE:

1. SEE DWGS FOR ACCESSIBLE FIXTURE LOCATIONS.
2. FIXTURES AND ACCESSORIES AT ACCESSIBLE LOCATIONS SHALL BE COMPLIANT WITH THE AMERICANS WITH DISABILITIES ACT.
3. A MIN 30"x 48" CLEAR SPACE SHALL BE PROVIDED IN FRONT OF ALL ACCESSIBLE FIXTURES.

3 ACCESSORY MOUNTING HEIGHTS

00TA08 SCALE: NTS
FILE: A908.dwg

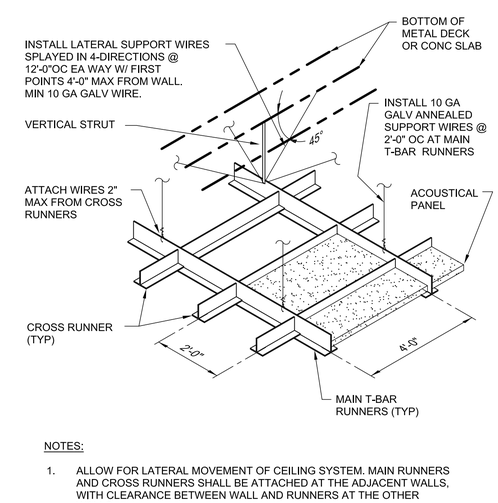

NOTES:

1. ALLOW FOR LATERAL MOVEMENT OF CEILING SYSTEM. MAIN RUNNERS AND CROSS RUNNERS SHALL BE ATTACHED AT THE ADJACENT WALLS, WITH CLEARANCE BETWEEN WALL AND RUNNERS AT THE OTHER WALLS.
2. DISCONTINUED ENDS OF CROSS RUNNERS AND MAIN RUNNERS SHALL BE VERTICALLY SUPPORTED WITHIN 6" OF SUCH ENDS (I.E. WHERE CEILING IS DISRUPTED BY A WALL).
3. LIGHTING FIXTURES AND AIR DIFFUSERS SHALL BE SUPPORTED DIRECTLY BY WIRES TO THE STRUCTURE ABOVE.

4 SUSPENDED CEILING

00TA08 SCALE: NTS
FILE: A918.dwg

REV	DATE	BY	DESCRIPTION
			CONFORMED DOCUMENTS

DESIGNED JTG
DRAWN JTG
CHECKED JTG
DATE NOVEMBER 2022

** ORIGINAL SEALED BY DAVID NEGRETE 06-10-22 TX RA 11640 **

NEGRETE & KOLAR ARCHITECTS,LLP
11720 NORTH IH 35. AUSTIN TEXAS 78753 P: 512.474.6526
carollo TBPELS No. F-882
CITY OF AUSTIN FOUNDED 1839

CITY OF AUSTIN
WILD HORSE RANCH WWTP EXPANSION
TYPICAL DETAILS
ARCHITECTURAL TYPICAL DETAILS 8

VERIFY SCALES
BAR IS ONE INCH ON ORIGINAL DRAWING
0 1"
IF NOT ONE INCH ON THIS SHEET, ADJUST SCALES ACCORDINGLY

JOB NO. 10976A.00
DRAWING NO. 00TA08
SHEET NO. 46 OF 464

LAST SAVED BY: Jason.George

PROJECT NO. 10976A10 FILE NAME: 10976A1000TA008.dwg

Plot Date: 10-OCT-2022 8:27:02 AM
User: LDietzel
Model: Layout1 ColorTable: gshade.ctb DesignScript: Carollo_Std_Pen_v0905.pen PlotScale: 1:1
LAST SAVED BY: ldietzel

1. SEE DIVISION 03 SPECIFICATION FOR REQUIREMENTS FOR CONCRETE CONSTRUCTION.
2. UNLESS OTHERWISE INDICATED ON THE DRAWINGS, MINIMUM REINFORCEMENT OF CONCRETE WALLS OR SLABS SHALL BE AS FOLLOWS. CONTACT ENGINEER FOR LOCATIONS INSIDE CONCRETE.
   10" THICK OR LESS: .....#5 @ 12" EACH WAY.
   MORE THAN 10" THICK: .....#5 @ 12" EACH WAY, EACH FACE.
3. WALL REINFORCEMENT AT CORNERS OR JUNCTIONS OF WALLS SHALL BE CONTINUOUS, LAP SPLICED, OR TERMINATED IN AN ACI STANDARD 90 DEGREE HOOK. SEE DETAIL S144/TYP.
4. UNLESS OTHERWISE INDICATED ON THE DRAWINGS, DOWELS BETWEEN ADJACENT CONCRETE PLACEMENTS SHALL BE THE SAME SIZE AND SPACING AS THE REINFORCEMENT WHICH IS SPLICED TO THE DOWELS.
5. SLAB, BEAM AND COLUMN REINFORCING BARS SHALL HAVE A MINIMUM EXTENSION OR ANCHORAGE INTO SUPPORTS IN ACCORDANCE WITH ACI 318 AND ACI 350.
6. PROVIDE STIRRUP SUPPORT BARS SHALL BE TO SECURE TOP BARS AGAINST DISPLACEMENT AS REQUIRED.
7. UNLESS OTHERWISE INDICATED ON THE DRAWINGS, CONCRETE COVER OVER #11 AND SMALLER REINFORCING BARS SHALL BE AS FOLLOWS:

A. SLABS AND JOISTS:

FORMED CONCRETE SURFACES AND UNFORMED TOP SURFACES FOR DRY CONDITIONS
#7 BARS AND SMALLER.....1"
#8 BARS AND LARGER.....1 1/2"
FORMED CONCRETE SURFACES AND UNFORMED TOP SURFACES EXPOSED TO WEATHER, IN CONTACT WITH SOIL OR FLUIDS, OR LOCATED OVER FLUIDS.....2"

B. BEAMS AND COLUMNS:

FORMED CONCRETE SURFACES FOR DRY CONDITIONS:
STIRRUPS, SPIRALS, AND TIES.....1 1/2"
PRINCIPAL REINFORCEMENT.....2"
FORMED CONCRETE SURFACES EXPOSED TO WEATHER, IN CONTACT WITH SOIL OR FLUIDS, OR IN BEAMS LOCATED OVER FLUIDS:
STIRRUPS AND TIES.....2"
PRINCIPAL REINFORCEMENT.....2 1/2"

C. WALLS:

FORMED CONCRETE SURFACES FOR DRY CONDITIONS:
#7 BARS AND SMALLER.....1"
#8 BARS AND LARGER.....1 1/2"
FORMED CONCRETE SURFACES EXPOSED TO WEATHER, OR IN CONTACT WITH SOIL OR FLUIDS.....2"

S101 TYP S — REINFORCED CONCRETE NOTES

D. FOOTINGS AND SLABS ON GRADE:

FORMED VERTICAL CONCRETE SURFACES.....2"
AT UNFORMED CONCRETE SURFACES CAST AGAINST SOIL, ROCK, OR CONCRETE WORK MATS.....3"
TOP SURFACE OF FOOTINGS AND SLABS.....SAME AS SLABS

8. WATERSTOPS:
   A. PROVIDE WATERSTOPS AT JOINTS IN SLABS AND WALLS OF LIQUID-CONTAINING STRUCTURES, AND PORTIONS OF STRUCTURES BELOW THE DESIGN GROUNDWATER LEVEL. MAKE WATERSTOPS CONTINUOUS THROUGH STRUCTURE, SPLICING WATERSTOPS IN SLABS WITH WATERSTOPS IN WALLS.
   B. END WATERSTOPS 3" BELOW TOP OF WALLS. WHERE TOP OF WALL IS COVERED BY A SLAB WITHOUT WATERSTOPS, CONTINUE WATERSTOP TO WALL/SLAB JOINT. WHERE TOP OF WALL IS COVERED BY A SLAB WITH WATERSTOPS, MAKE WATERSTOPS CONTINUOUS, SPLICING WATERSTOPS IN WALLS WITH WATERSTOPS IN SLAB.
9. CURE CONCRETE IN ACCORDANCE WITH THE CONTRACT DOCUMENTS. WHERE WATER CURING IS SPECIFIED, MEMBRANE CURING IS NOT ALLOWED.
   A. THE CONTRACTOR IS WARNED THAT WATER CURING IS DIFFICULT AT TIMES DUE TO WIND AND DRY CONDITIONS. STUDY SPECIFICATION REQUIREMENTS AND FURNISH ADEQUATE SYSTEMS TO PROVIDE WATER CURING WHERE REQUIRED.
   B. KEEP WATER CURED SURFACES VISIBLY MOIST AT ALL TIMES. FLOOD TOPS OF WALLS NOT LESS THEN 3 TIMES DAILY.
10. DO NOT PLACE BACKFILL AGAINST WALLS UNTIL:
    A. WALLS HAVE BEEN CAST TO FULL HEIGHT OF STRUCTURE AND CONCRETE HAS REACHED THE MINIMUM SPECIFIED COMPRESSIVE STRENGTH (f'c).
    B. CONNECTING SLABS AND BEAMS HAVE BEEN CAST AND CONCRETE IN THOSE ELEMENTS HAS REACHED THE MINIMUM SPECIFIED COMPRESSIVE STRENGTH (f'c).
11. LAP SPLICES:
    A. SEE TABLE 1 OF THIS DETAIL FOR LAP SPLICE LENGTHS.
    B. WHEN MULTIPLE BARS ARE SPLICED AT THE SAME SECTION, THE "CLEAR BAR SPACING" IS DEFINED AS THE MINIMUM CLEAR DISTANCE BETWEEN THE BARS OUTSIDE THE SPLICE LENGTH MINUS ONE BAR DIAMETER.
    C. UNLESS OTHERWISE INDICATED ON THE DRAWINGS, BARS AT A LAP SPLICE SHALL BE IN CONTACT WITH EACH OTHER.
    D. "TOP BARS" ARE HORIZONTAL REINFORCEMENT AT LOCATIONS WHERE MORE THAN 12 INCHES OF FRESH CONCRETE IS CAST IN THE MEMBER BELOW THE BAR.
12. FORM EXPOSED CONCRETE CORNERS AND EDGES WITH 3/4" CHAMFER UNLESS OTHERWISE INDICATED ON THE DRAWINGS.

S101 TYP S — REINFORCED CONCRETE NOTES

TABLE 1: REINFORCING BAR LAP SPLICES: f'c = 4000 PSI, Fy = 60,000 PSI

BAR SIZE	MINIMUM COVER (BAR DIA)	MINIMUM CLEAR BAR SPACING (BAR DIA)	LAP SPLICE LENGTH (INCHES)	
			TOP BARS	OTHER BARS
#4	MORE THAN 1	MORE THAN 2	32 ★	25 ★
	MORE THAN 2	MORE THAN 4	20	16
#5	MORE THAN 1	MORE THAN 2	40 ★	31 ★
	MORE THAN 2	MORE THAN 4	26	20
#6	MORE THAN 1	MORE THAN 2	48 ★	37 ★
	MORE THAN 2	MORE THAN 4	30	24
#7	MORE THAN 1	MORE THAN 2	70 ★	54 ★
	MORE THAN 2	MORE THAN 4	43	33
#8	MORE THAN 1	MORE THAN 2	81 ★	62 ★
	MORE THAN 2	MORE THAN 4	50	38
#9	MORE THAN 1	MORE THAN 2	90 ★	70 ★
	MORE THAN 2	MORE THAN 4	56	42
#10	MORE THAN 1	MORE THAN 2	104 ★	81 ★
	MORE THAN 2	MORE THAN 4	62	48
#11	MORE THAN 1	MORE THAN 2	114 ★	88 ★
	MORE THAN 2	MORE THAN 4	69	54

REINFORCING BAR LAP SPLICE TABLE NOTES:

1. TABULATED SPLICE LENGTHS ARE APPLICABLE ONLY WHEN BOTH REQUIREMENTS FOR MINIMUM COVER AND FOR MINIMUM CLEAR BAR SPACING ARE SATISFIED.
2. ★ = IF THE CLEAR BAR SPACING IS LESS THAN OR EQUAL TO TWO BAR DIAMETERS, OR THE COVER IS LESS THAN OR EQUAL TO ONE BAR DIAMETER, THE LAP SPLICE LENGTH SHALL BE INCREASED BY 50 PERCENT.

S101 TYP S — REINFORCED CONCRETE NOTES

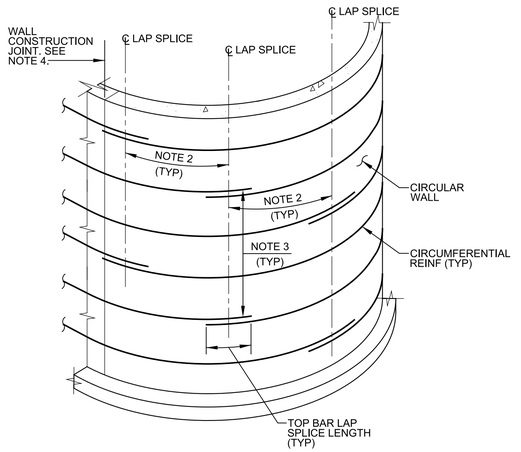

NOTES:

1. LAP SPLICE HORIZONTAL REINFORCEMENT IN CIRCULAR WALLS OF LIQUID-CONTAINING STRUCTURES USING TOP BAR LAP SPLICES.
2. AT EACH FACE, STAGGER ADJACENT LAP SPLICES BY AT LEAST ONE TOP BAR LAP SPLICE LENGTH, BUT NOT LESS THAN 3 FEET.
3. AT EACH FACE OF WALL, LAP SPLICES SHALL NOT COINCIDE IN VERTICAL ARRAYS MORE THAN EVERY THIRD BAR.
4. STAGGER BAR PROJECTIONS PAST VERTICAL CONSTRUCTION JOINT TO MAINTAIN LAYOUT RESULTING FROM NOTES 2 AND 3.
5. SHOP-BEND HORIZONTAL BARS TO RADIUS OF WALL.

S102 TYP S — CIRCULAR WALLS - HORIZONTAL REINFORCEMENT LAP SPLICES

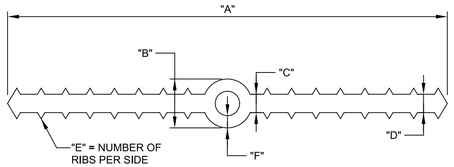

TYPE	"A"	"B"	"C"	"D"	"E"	"F"	APPLICATION
W/O CENTER BULB	6"	-	3/8"	3/8"	7	-	CONSTRUCTION AND CONTROL JOINTS
CENTER BULB	6"	7/8"	3/8"	3/8"	7	9/32"	FOR USE WITH DETAIL EM071/TYP ONLY
CENTER BULB	9"	1"	3/8"	3/8"	7	1/4"	EXPANSION JOINTS 1" AND NARROWER
CENTER BULB	9"	2"	3/8"	3/8"	7	1/4"	EXPANSION JOINTS WIDER THAN 1" AND TENSION/COMPRESSION RING BEAM AT DIGESTERS

NOTES:

1. SEE SPECIFICATIONS FOR MATERIAL REQUIREMENTS.
2. DIMENSIONS ARE MINIMUM, UNLESS OTHERWISE NOTED.

S106 TYP — PVC WATERSTOP SCHEDULE

12/15/20

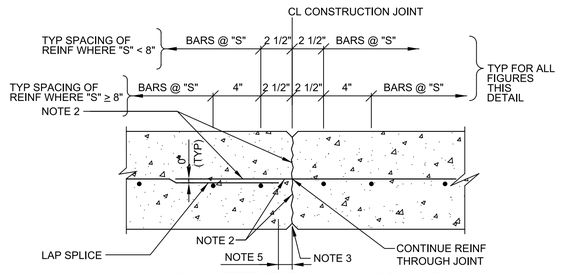

NON-WATER BEARING WALL OR SLAB
SINGLE LAYER REINFORCEMENT

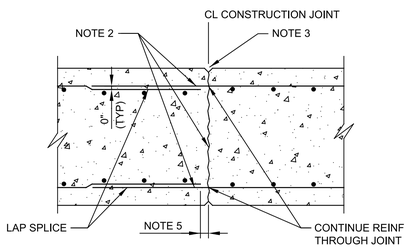

NON-WATER BEARING WALL OR SLAB
DOUBLE LAYER REINFORCEMENT

S110 TYP S — CONSTRUCTION JOINT

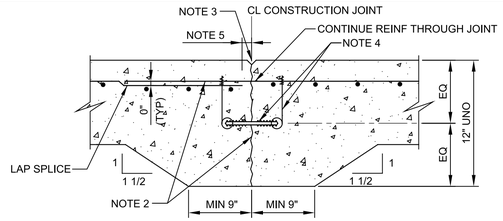

WATER BEARING SLAB LESS THAN 12" THICK

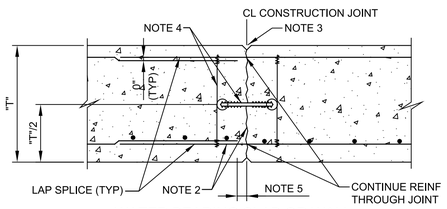

WATER BEARING SLAB OR WALL

NOTES:

1. "S" EQUALS TYPICAL BAR SPACING INDICATED ON THE DRAWINGS. "T" EQUALS SLAB OR WALL THICKNESS.
2. WATER-BLAST EXPOSED JOINT FACE AND PROJECTING REINFORCEMENT BEFORE PLACING CONCRETE.
3. JOINT EDGES:
   A. FOR WALLS AND BOTTOM OF EXPOSED SLABS: FORM EDGES WITH 1/2" CHAMFER.
   B. FOR SLABS: EDGE TOP AND ENDS WITH 1/4" RADIUS.
4. 6" WATERSTOP CENTERED ON JOINT - SEE DETAIL S106/TYP. PROVIDE WIRE TIES MAX 2'-0" OC. HOG RINGS MAY BE USED IN LIEU OF WIRE LOOPS. THOROUGHLY CLEAN WATERSTOP BEFORE PLACING CONCRETE IN SECOND POUR.
5. STOP REINFORCING 2" CLEAR OF JOINT.

S110 TYP S — CONSTRUCTION JOINT

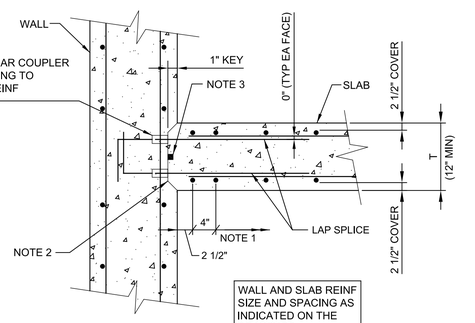

THIS CONFORMED DOCUMENT IS RELEASED FOR THE CONVENIENCE OF THE CONTRACTOR UNDER THE AUTHORITY OF:

DANNY M HURTADO, P.E.
TX LIC NO. 104266

11-01-22
DATE

SEE DISCLAIMER FOR LIMITATIONS OF USE.

CONTRACT DOCUMENTS DATED JUNE 10, 2022, AS PART OF THE BIDDING DOCUMENTS (DRAWINGS AND SPECIFICATIONS) AND SUBSEQUENTLY ISSUED ADDENDA HAVE BEEN MERGED INTO ONE CONFORMING SET OF DOCUMENTS FOR THE CONVENIENCE OF THE CONTRACTOR. IF INCONSISTENCIES OR AMBIGUITIES BETWEEN "CONFORMED" DOCUMENTS AND CONTRACT DOCUMENTS ARE FOUND, THE CONTRACT DOCUMENTS SHALL GOVERN.

NOTES:

1. "S" = BAR SPACING INDICATED ON THE DRAWINGS.
2. WATER-BLAST JOINT THOROUGHLY AND PROVIDE "SATURATED SURFACE DRY" (SSD) CONDITIONS BEFORE PLACING CONCRETE SLAB.
3. WHERE DRAWINGS INDICATE "W/STRIP WSTP," PROVIDE LOW EXPANSION HYDROPHILIC WATERSTOP CENTERED BETWEEN REINF DOWELS.

S112 TYP S, N — CONSTRUCTION JOINT - SLAB AT CONTINUOUS WALL - REINFORCING COUPLERS

REV	DATE	BY	DESCRIPTION
			CONFORMED DOCUMENTS

DESIGNED KMD
DRAWN JLH
CHECKED JDS
DATE NOVEMBER 2022

** ORIGINAL SEALED BY KWASI DUOSE 06-10-22 TX PE 100650 **

carollo® TBPELS No. F-882

CITY OF AUSTIN — FOUNDED 1839

CITY OF AUSTIN

CITY OF AUSTIN
WILD HORSE RANCH WWTP EXPANSION
TYPICAL DETAILS
STRUCTURAL
TYPICAL DETAILS 1

VERIFY SCALES
BAR IS ONE INCH ON ORIGINAL DRAWING
0 1"
IF NOT ONE INCH ON THIS SHEET, ADJUST SCALES ACCORDINGLY

JOB NO. 10976A.00
DRAWING NO. 00TS01
SHEET NO. 47 OF 464

Plot Date: 10-OCT-2022 9:27:14 AM
User: LDietzel
Model: Layout1 ColorTable: gshade.ctb DesignScript: Carollo_Std_Pen_v0905.pen PlotScale: 1:1
LAST SAVED BY: ldietzel

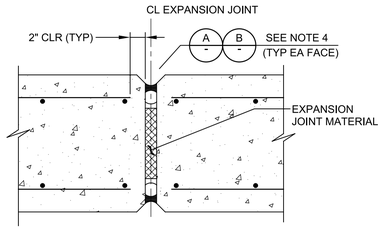

NON-WATER BEARING SLAB OR WALL

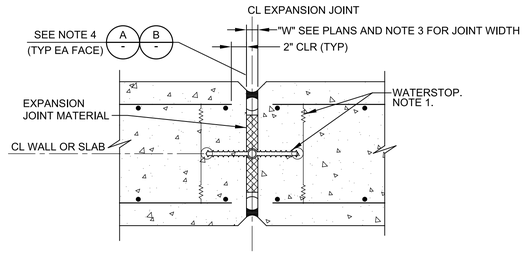

WATER BEARING SLAB OR WALL

S130 TYP S — EXPANSION JOINT — SHEET 1 OF 2 — 07/22/16

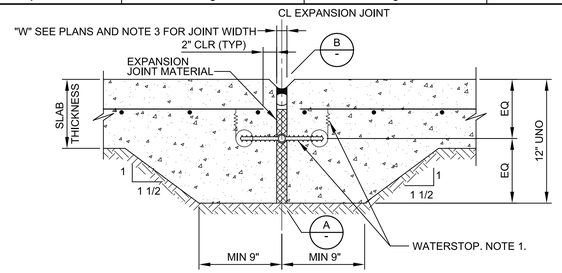

WATER BEARING SLAB LESS THAN 12" THICK

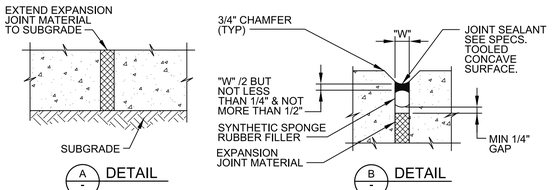

NOTES:

1. 9" WATERSTOP WITH CENTER BULB CENTERED ON JOINT - SEE DETAIL S106/TYP. PROVIDE WIRE TIES MAX 2'-0" OC. HOG RINGS MAY BE USED IN LIEU OF WIRE LOOPS. THOROUGHLY CLEAN WATERSTOP BEFORE PLACING CONCRETE IN SECOND POUR.
2. JOINT EDGES:
   A. FOR WALLS AND BOTTOM OF EXPOSED SLABS: FORM EDGES WITH 3/4" CHAMFER.
   B. FOR SLABS: EDGE TOP AND ENDS WITH 1/4" RADIUS.
3. "W"=1" UNLESS OTHERWISE INDICATED ON PLANS. (MIN JOINT WIDTH = 3/8", MAX JOINT WIDTH = 2")
4. USE DETAIL A ONLY AT SOIL SIDE OF SLABS ON GRADE. USE DETAIL B AT ALL OTHER LOCATIONS.

S130 TYP S — EXPANSION JOINT — SHEET 2 OF 2 — 07/22/16

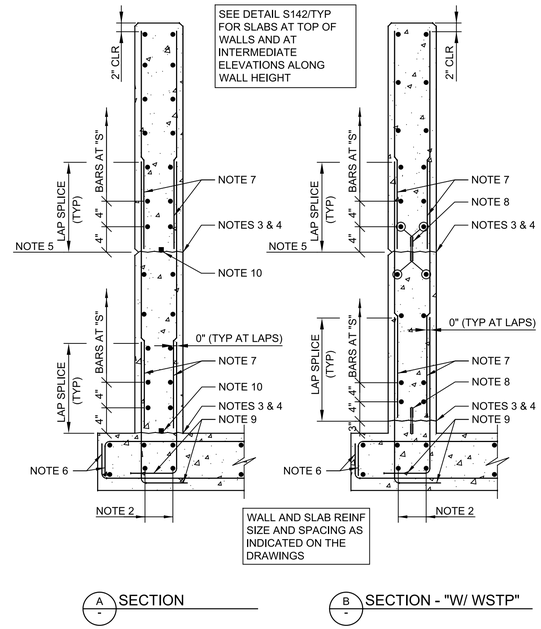

S140 TYP S, N — CONSTRUCTION JOINT - WALLS — SHEET 1 OF 2 — 03/12/19

NOTES:

1. "S" EQUALS TYPICAL BAR SPACING INDICATED ON THE DRAWINGS.
2. PLACE AND ALIGN BARS BEFORE PLACING DOWELS. BAR SIZE TO MATCH SLAB BARS.
3. WATER-BLAST JOINT FACE AND PROJECTING REINFORCEMENT BEFORE PLACING CONCRETE.
4. PLACE CEMENT GROUT OVER JOINT FACE IMMEDIATELY BEFORE PLACING CONCRETE. (SEE SPECIFICATIONS.)
5. CONSTRUCTION JOINT WHERE INDICATED ON THE DRAWINGS. WHERE WALL SURFACE IS EXPOSED TO VIEW IN THE FINISHED WORK, PROVIDE V-GROOVE PER DETAIL S162/TYP.
6. STANDARD 90° HOOK WHERE INDICATED ON THE DRAWINGS. (ALTERNATE: PROVIDE 180° HOOK WHERE REQUIRED BY SLAB THICKNESS.)
7. DOWELS: SAME SIZE AND SPACING AS VERTICAL WALL BARS, UNLESS OTHERWISE NOTED.
8. 6" PVC WATERSTOP CENTERED VERTICALLY ON JOINT. PROVIDE WIRE TIES MAX 2'-0" OC. HOG RINGS MAY BE USED IN LIEU OF WIRE LOOPS. THOROUGHLY CLEAN WATERSTOP BEFORE PLACING CONCRETE.
9. STANDARD 90° HOOK UNLESS OTHERWISE INDICATED ON THE DRAWINGS.
10. WHERE DRAWINGS INDICATE "W/ STRIP WSTP" PROVIDE LOW EXPANSION HYDROPHILIC WATERSTOP AT TOP SURFACE OF JOINT AND CENTERED BETWEEN VERTICAL BARS.

THIS CONFORMED DOCUMENT IS RELEASED FOR THE CONVENIENCE OF THE CONTRACTOR UNDER THE AUTHORITY OF:

11-01-22

DANNY M HURTADO, P.E. DATE
TX LIC NO. 104266

SEE DISCLAIMER FOR LIMITATIONS OF USE.

CONTRACT DOCUMENTS DATED JUNE 10, 2022, AS PART OF THE BIDDING DOCUMENTS (DRAWINGS AND SPECIFICATIONS) AND SUBSEQUENTLY ISSUED ADDENDA HAVE BEEN MERGED INTO ONE CONFORMING SET OF DOCUMENTS FOR THE CONVENIENCE OF THE CONTRACTOR. IF INCONSISTENCIES OR AMBIGUITIES BETWEEN "CONFORMED" DOCUMENTS AND CONTRACT DOCUMENTS ARE FOUND, THE CONTRACT DOCUMENTS SHALL GOVERN.

S140 TYP S, N — CONSTRUCTION JOINT - WALLS — SHEET 2 OF 2 — 03/12/19

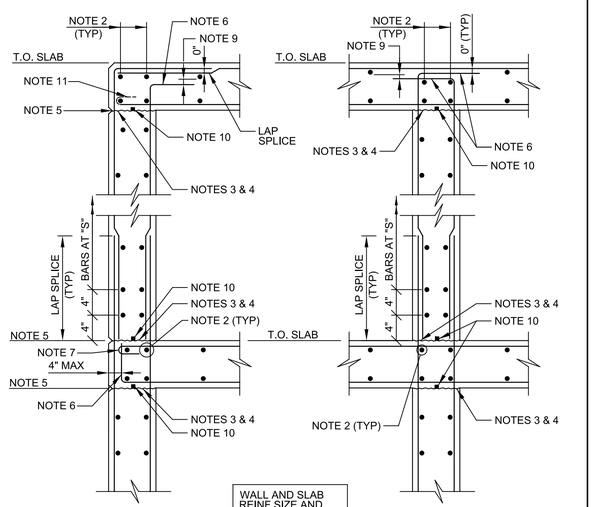

SLAB AT 1 SIDE — SLAB AT 2 SIDES

S142 TYP S, N — CONSTRUCTION JOINT - WALLS AT ELEVATED SLABS — SHEET 1 OF 3 — 03/12/19

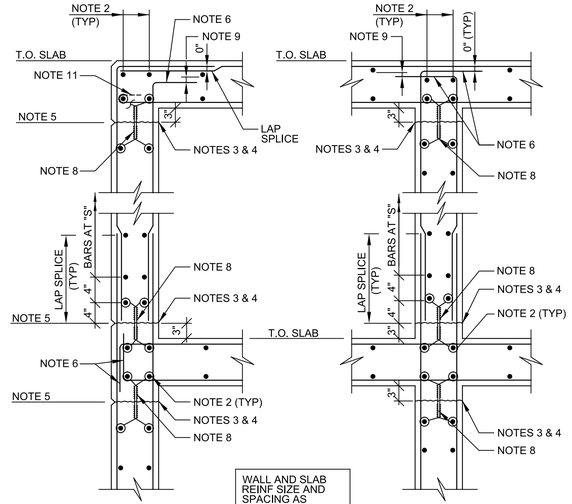

SLAB AT 1 SIDE — SLAB AT 2 SIDES

S142 TYP S,N — CONSTRUCTION JOINT - WALLS AT ELEVATED SLABS — SHEET 2 OF 3 — 03/12/19

NOTES:

1. "S" EQUALS TYPICAL BAR SPACING INDICATED ON THE DRAWINGS.
2. AT INTERSECTION, MAKE BAR SIZE THE LARGER OF BAR SIZES IN ADJACENT SLAB OR WALL. PLACE BARS AT SAME LAYERS AS IN ADJACENT SLAB OR WALL.
3. WATER-BLAST JOINT FACE AND PROJECTING REINFORCEMENT BEFORE PLACING CONCRETE.
4. PLACE CEMENT GROUT OVER JOINT FACE IMMEDIATELY BEFORE PLACING CONCRETE. (SEE SPECIFICATIONS)
5. CONSTRUCTION JOINT WHERE INDICATED ON THE DRAWINGS. WHERE WALL SURFACE IS EXPOSED TO VIEW IN THE FINISHED WORK, PROVIDE V-GROOVE PER DETAIL S162/TYP.
6. STANDARD 90° HOOK UNLESS OTHERWISE INDICATED ON THE DRAWINGS.
7. STANDARD 180° HOOK (ALTERNATE: 90° HOOK ROTATED OUT OF VERTICAL PLANE IF APPROVED BY ENGINEER.)
8. 6" PVC WATERSTOP CENTERED VERTICALLY ON JOINT. PROVIDE WIRE TIES MAX 2'-0" OC. HOG RINGS MAY BE USED IN LIEU OF WIRE LOOPS. THOROUGHLY CLEAN WATERSTOP BEFORE PLACING CONCRETE.
9. 1 BAR DIAMETER CLEAR.
10. WHERE DRAWINGS INDICATE "W/ STRIP WSTP" PROVIDE LOW EXPANSION HYDROPHILIC WATERSTOP AT TOP SURFACE OF JOINT AND CENTERED BETWEEN VERTICAL BARS.
11. STANDARD 180° HOOK WHERE INDICATED ON THE DRAWINGS.

S142 TYP S,N — CONSTRUCTION JOINT - WALLS AT ELEVATED SLABS — SHEET 3 OF 3 — 03/12/19

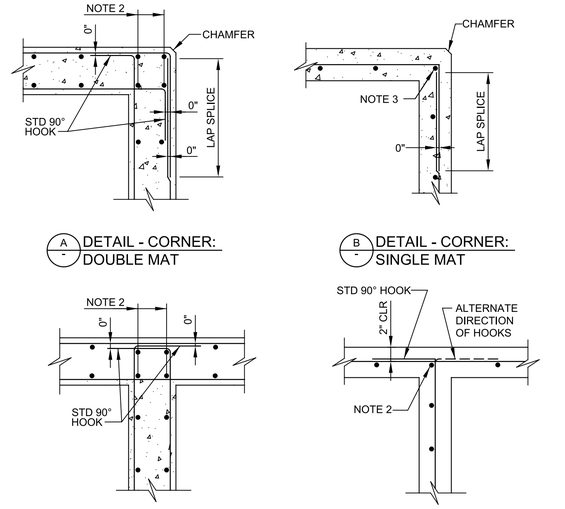

NOTES:

1. BAR SIZE, SPACING, AND ORIENTATION OF BAR LAYERS SHALL BE AS INDICATED ON THE DRAWINGS.
2. AT INTERSECTION, MAKE BAR SIZE THE LARGER OF BAR SIZES IN CONNECTING WALLS. PLACE BARS IN SAME LAYERS AS AT CONNECTING WALLS (TYP).
3. BAR TAILS: 12 BAR DIAMETERS PLUS 12".

S144 TYP S — WALL REINFORCEMENT AT CORNERS & INTERSECTIONS — SHEET 1 OF 2 — 05/31/16

REV	DATE	BY	DESCRIPTION
			CONFORMED DOCUMENTS

DESIGNED KMD
DRAWN JLH
CHECKED JDS
DATE NOVEMBER 2022

** ORIGINAL SEALED BY KWASI DUOSE 06-10-22 TX PE 100650 **

carollo® TBPELS No. F-882

CITY OF AUSTIN — FOUNDED 1839

CITY OF AUSTIN

CITY OF AUSTIN
WILD HORSE RANCH WWTP EXPANSION
TYPICAL DETAILS
STRUCTURAL
TYPICAL DETAILS 2

VERIFY SCALES
BAR IS ONE INCH ON ORIGINAL DRAWING
0 1"
IF NOT ONE INCH ON THIS SHEET, ADJUST SCALES ACCORDINGLY

JOB NO. 10976A.00
DRAWING NO. 00TS02
SHEET NO. 48 OF 464

Plot Date: 10-OCT-2022 9:28:51 AM
User: LDietzel
PlotScale: 1:1
DesignScript: Carollo_Std_Pen_v0905.pen
ColorTable: gshade.ctb
Model: Layout1
LAST SAVED BY: ldietzel

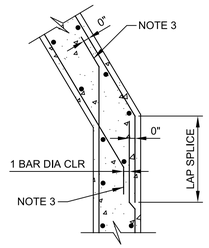

E DETAIL - INTERSECTION: DOUBLE MAT

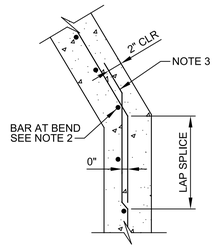

F DETAIL - INTERSECTION: SINGLE MAT

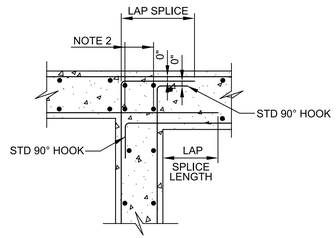

G DETAIL - INTERSECTION: CHANGE IN WALL THICKNESS

S144 TYP S — WALL REINFORCEMENT AT CORNERS & INTERSECTIONS

SHEET 2 OF 2

05/31/16

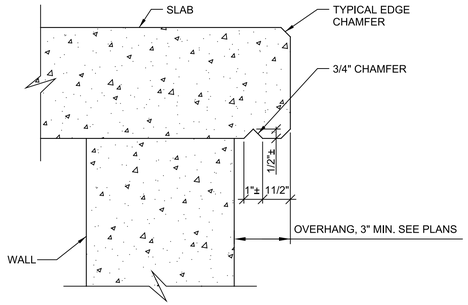

S160 TYP N — DRIP GROOVE

07/21/16

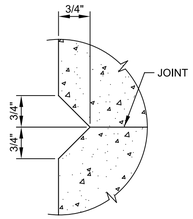

S162 TYP N — V-GROOVE JOINT

07/21/16

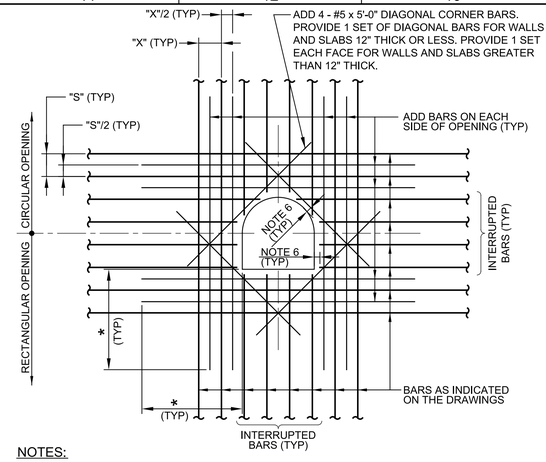

NOTES:

1. AREA OF ADD BARS AT EACH EDGE OF OPENING IN EACH DIRECTION SHALL BE EQUAL TO OR GREATER THAN 1/2 THE CROSS SECTIONAL AREA OF THE INTERRUPTED BARS.
2. PROVIDE STANDARD ACI HOOKS ON BARS IF STRAIGHT EXTENSION PAST THE OPENING, CANNOT BE ACHIEVED.
3. PLACE ADD BARS IN SAME PLANES AS INTERRUPTED REINFORCING.
4. PLACE #5 DIAGONAL BARS ON INSIDE OF INTERRUPTED REINFORCING.
5. * DIMENSION EQUALS OPENING DIMENSION MEASURED PERPENDICULAR TO ADD BARS PLUS LAP SPLICE LENGTH.
6. 2" CLEAR TO CONCRETE OPENINGS OR OUTSIDE FACE OF PIPES AND PIPE SLEEVES. DO NOT OVERCUT REINFORCEMENT FOR EASIER PLACEMENT OF WEEP RINGS AND FLANGES.
7. ADD BARS ARE NOT REQUIRED AT SIDES OF OPENINGS PARALLEL TO AND WITHIN 6" OF A WALL OR BEAM.

S180 TYP S, N — ADDITIONAL REINFORCING AT OPENINGS IN CONCRETE SLABS OR WALLS

03/12/19

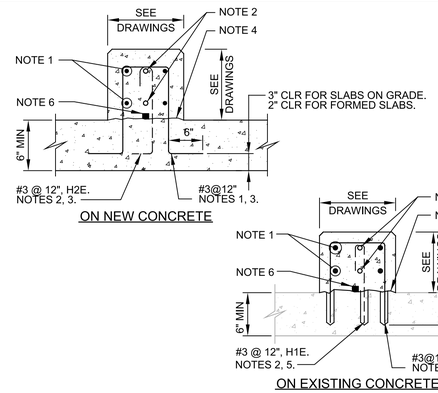

ON NEW CONCRETE

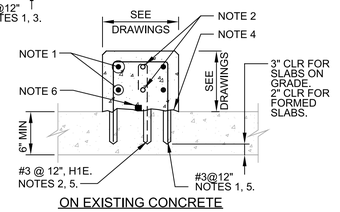

ON EXISTING CONCRETE

NOTES:

1. FOR CURB WIDTH > 10": HOR REINF: 1 - #4 EACH FACE FOR EACH 12" HEIGHT.
2. FOR CURB WIDTH ≤ 10". HOR REINF: 1 - #4 INSIDE 180° HOOK. ADD 1 - #4 HOR FOR EACH 12" HEIGHT.
3. HOOK PARALLEL TO CURB WHERE REQD.
4. REMOVE EXISTING COATINGS. ROUGHEN CONCRETE TO 1/4" AMPLITUDE. CLEAN AND APPLY EPOXY RESIN/PORTLAND CEMENT BONDING AGENT BEFORE PLACING CURB.
5. SET NEW REINF IN EXISTING CONCRETE USING DETAIL S194/TYP.
6. FOR CURB 10" & WIDER: WHERE DRAWINGS INDICATE "W/STRIP WSTP," PROVIDE LOW EXPANSION HYDROPHILIC WATERSTOP AT TOP SURFACE OF JOINT AND CENTERED BETWEEN VERTICAL #3'S. WRAP STRIP WATERSTOP UP VERTICAL END WHERE CURB ABUTS WALL OR COLUMN. STOP STRIP MIN 4" BELOW TOP OF CURB.

S184 TYP S — CONCRETE CURB

04/26/17

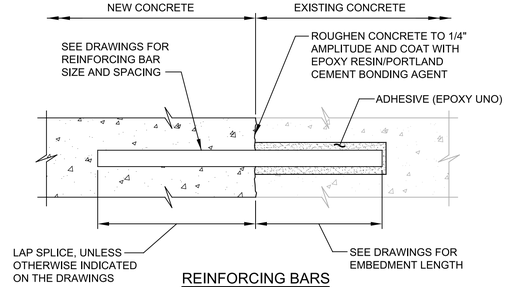

REINFORCING BARS

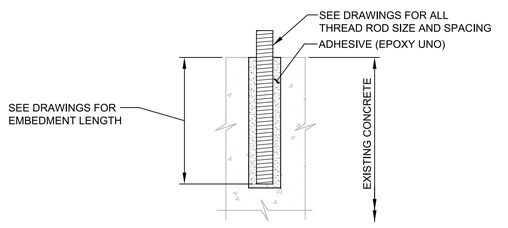

ALL-THREAD RODS

NOTE:

1. INSTALLATION OF REINFORCING BARS AND ALL THREAD RODS AS INDICATED IN THE SPECIFICATIONS.

S194 TYP S — ADHESIVE BONDED REINFORCING BARS OR ALL THREAD RODS

04/18/17

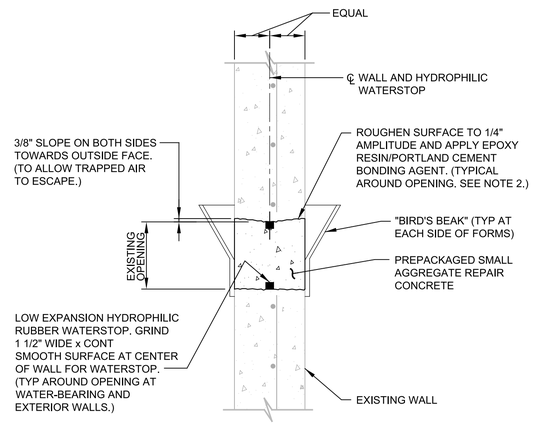

NOTES:

1. PLACE CONCRETE THROUGH "BIRD'S BEAK" ON FORM. REMOVE EXCESS CONCRETE AND FINISH TO MATCH EXISTING SURFACE.
2. REMOVE ANY LOOSE OR FRACTURED AGGREGATE OR CONCRETE ON SURFACE OF ROUGHENED CONCRETE.

S220 TYP N — FILL OPENING: CONCRETE WALL WITH 1 MAT REINFORCING

07/31/14

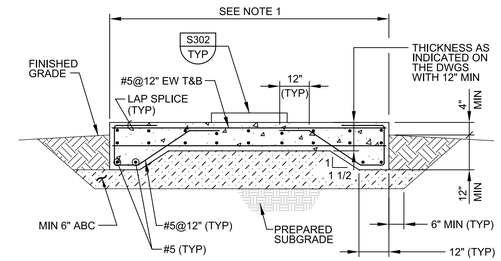

THIS CONFORMED DOCUMENT IS RELEASED FOR THE CONVENIENCE OF THE CONTRACTOR UNDER THE AUTHORITY OF:

DANNY M HURTADO, P.E.
TX LIC NO. 104266

11-01-22
DATE

SEE DISCLAIMER FOR LIMITATIONS OF USE.

CONTRACT DOCUMENTS DATED JUNE 10, 2022, AS PART OF THE BIDDING DOCUMENTS (DRAWINGS AND SPECIFICATIONS) AND SUBSEQUENTLY ISSUED ADDENDA HAVE BEEN MERGED INTO ONE CONFORMING SET OF DOCUMENTS FOR THE CONVENIENCE OF THE CONTRACTOR. IF INCONSISTENCIES OR AMBIGUITIES BETWEEN "CONFORMED" DOCUMENTS AND CONTRACT DOCUMENTS ARE FOUND, THE CONTRACT DOCUMENTS SHALL GOVERN.

NOTE:

1. DIMENSIONS AS REQUIRED TO SUIT EQUIPMENT OR AS INDICATED ON THE DRAWINGS.

S300 TYP S — EQUIPMENT SLAB

12/15/20

REV	DATE	BY	DESCRIPTION
			CONFORMED DOCUMENTS

DESIGNED KMD
DRAWN KRJ
CHECKED JDS
DATE NOVEMBER 2022

** ORIGINAL SEALED BY KWASI DUOSE 06-10-22 TX PE 100650 **

carollo® TBPELS No. F-882

CITY OF AUSTIN — FOUNDED 1839

CITY OF AUSTIN

CITY OF AUSTIN
WILD HORSE RANCH WWTP EXPANSION
TYPICAL DETAILS
STRUCTURAL
TYPICAL DETAILS 3

VERIFY SCALES
BAR IS ONE INCH ON ORIGINAL DRAWING
0 1"
IF NOT ONE INCH ON THIS SHEET, ADJUST SCALES ACCORDINGLY

JOB NO. 10976A.00
DRAWING NO. 00TS03
SHEET NO. 49 OF 464

PROJECT NO. 10976A10 FILE NAME: 10976A1000TS003.dgn

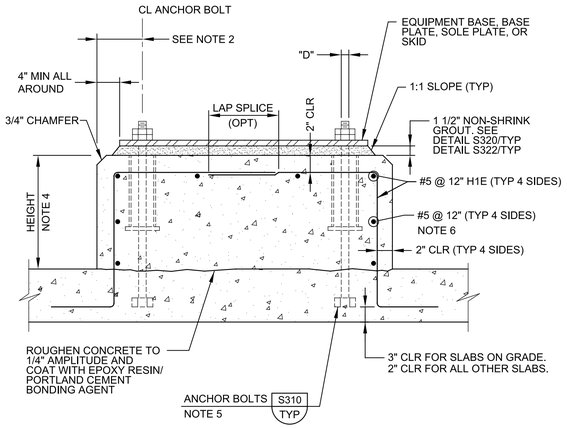

NOTES:

1. "D" = DIAMETER OF ANCHOR BOLT.
2. THE EDGE DISTANCE ON THE ANCHOR BOLTS SHALL NOT BE LESS THAN 6" OR 8 x "D".
3. PAD DIMENSIONS AND ANCHOR BOLT SIZE SHALL CONFORM TO EQUIPMENT MANUFACTURER'S REQUIREMENTS.
4. HEIGHT TO SUIT EQUIPMENT FURNISHED OR AS INDICATED ON THE DRAWINGS.
5. WHERE CONCRETE SLAB OR BEAM THICKNESS WILL NOT ACCOMMODATE THE ANCHOR BOLT, PROVIDE EXTRA THICKNESS FOR SLAB OR BEAM.
6. PROVIDE HOOPS OR CORNERS PER DETAIL S144/TYP.

S302 TYP — EQUIPMENT BASE

N 12/29/2017

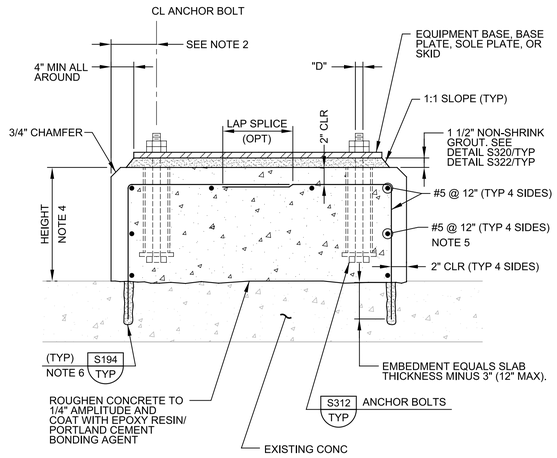

NOTES:

1. "D" = DIAMETER OF ANCHOR BOLT.
2. THE EDGE DISTANCE ON THE ANCHOR BOLTS SHALL NOT BE LESS THAN 6" OR 8 x "D".
3. PAD DIMENSIONS AND ANCHOR BOLT SIZE SHALL CONFORM TO EQUIPMENT MANUFACTURER'S REQUIREMENTS.
4. HEIGHT TO SUIT EQUIPMENT FURNISHED OR AS INDICATED ON THE DRAWINGS.
5. PROVIDE HOOPS OR CORNERS PER DETAIL S144/TYP.
6. FIELD LOCATE EXISTING REINFORCEMENT IN SLAB BEFORE DRILLING. ADJUST DOWEL LOCATIONS TO AVOID REINFORCEMENT.

S304 TYP — EQUIPMENT BASE ON EXISTING CONCRETE

N 12/29/2017

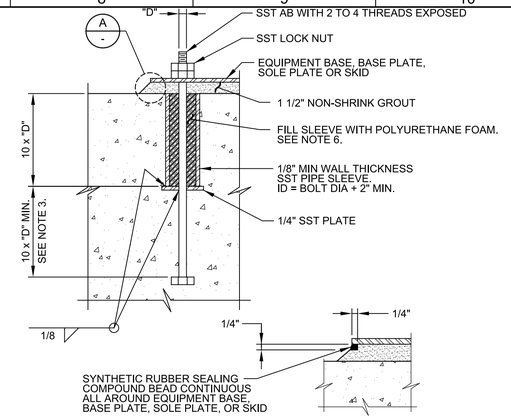

NOTES:

1. "D" = DIAMETER OF ANCHOR BOLT.
2. ANCHOR BOLT DIAMETER AS INDICATED ON THE DRAWINGS. IF NOT INDICATED ON THE DRAWINGS, THE ANCHOR BOLT SIZE SHALL BE AS RECOMMENDED BY THE EQUIPMENT MANUFACTURER.
3. WHERE CONCRETE SLAB OR BEAM THICKNESS WILL NOT ACCOMMODATE THE ANCHOR BOLT, PROVIDE EXTRA THICKNESS OF SLAB OR BEAM.
4. PREFABRICATED PLASTIC ANCHOR BOLT SLEEVE OPTIONAL.
5. DO NOT USE ALL THREAD RODS AS A SUBSTITUTE FOR BOLTS WITH A BOLT HEAD. SMOOTH RODS THREADED AT THE ENDS MAY BE USED IF ACCEPTABLE TO THE ENGINEER. DO NOT WELD NUTS TO THE THREADED RODS.
6. COMPLETELY REMOVE ANY POLYURETHANE FOAM FROM CONCRETE, EQUIPMENT BASE, BASE PLATE, SOLE PLATE, OR SKID, AND ANCHOR BOLTS ABOVE TOP OF CONCRETE.
7. DO NOT USE LEVELING NUTS TO SUPPORT AND LEVEL EQUIPMENT BASE, BASE PLATE, SOLE PLATE, OR SKID.

S310 TYP — ANCHOR BOLT - EMBED AND SLEEVE

N 05/20/15

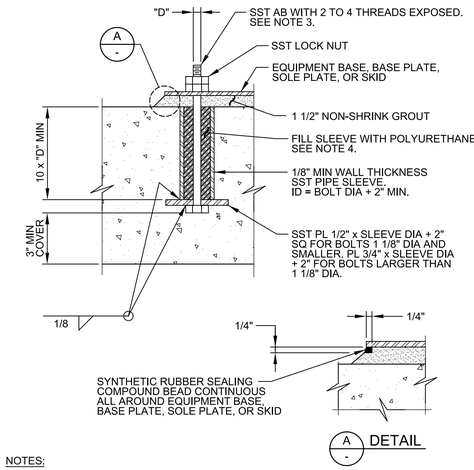

NOTES:

1. "D" = DIAMETER OF ANCHOR BOLT.
2. ANCHOR BOLT DIAMETER AS INDICATED ON THE DRAWINGS. IF NOT INDICATED ON THE DRAWINGS, THE ANCHOR BOLT SIZE SHALL BE AS RECOMMENDED BY THE EQUIPMENT MANUFACTURER.
3. DO NOT USE ALL THREAD RODS AS A SUBSTITUTE FOR BOLTS WITH A BOLT HEAD.
4. COMPLETELY REMOVE ANY POLYURETHANE FOAM FROM CONCRETE, EQUIPMENT BASE, BASE PLATE, SOLE PLATE, OR SKID, AND ANCHOR BOLTS ABOVE TOP OF CONCRETE.
5. DO NOT USE LEVELING NUTS TO SUPPORT AND LEVEL EQUIPMENT BASE, BASE PLATE, SOLE PLATE, OR SKID.

S312 TYP — ANCHOR BOLT - IN SLEEVE

N 05/20/15

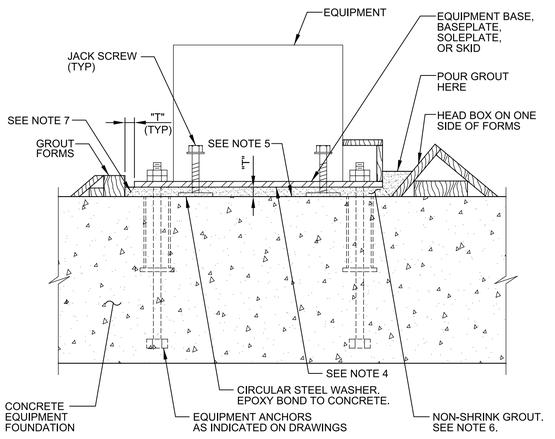

NOTES;

1. "T" = EQUALS GROUT THICKNESS INDICATED ON THE DRAWING. 1" MINIMUM GROUT THICKNESS.
2. FILL ANCHOR SLEEVES WITH POLYURETHANE FOAM BEFORE GROUTING.
3. DO NOT USE LEVELING NUTS ON EQUIPMENT ANCHORS.
4. PREPARE SURFACE OF EQUIPMENT BASES, BASEPLATES, SOLEPLATES, AND SKIDS IN CONTACT WITH GROUT AS SPECIFIED IN SECTION 15050 (46_05_10).
5. PREPARE SURFACES OF CONCRETE FOUNDATION IN CONTACT WITH GROUT AS SPECIFIED IN SECTION 15050 (46_05_10).
6. PLACE NON-SHRINK GROUT AS SPECIFIED IN SECTION 15050 (46_05_10).
7. AFTER GROUT SETS, TRIM GROUT TO 45 DEGREE CHAMFER.

S320 TYP — EQUIPMENT GROUTING WITH NON-SHRINK GROUT

N 12/29/17

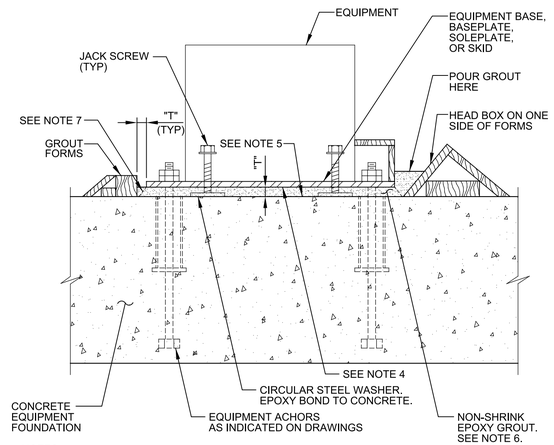

NOTES;

1. "T" = EQUALS GROUT THICKNESS INDICATED ON THE DRAWING. 1" MINIMUM GROUT THICKNESS.
2. FILL ANCHOR SLEEVES WITH POLYURETHANE FOAM BEFORE GROUTING.
3. DO NOT USE LEVELING NUTS ON EQUIPMENT ANCHORS.
4. PREPARE SURFACE OF EQUIPMENT BASES, BASEPLATES, SOLEPLATES, AND SKIDS IN CONTACT WITH GROUT AS SPECIFIED IN SECTION 15050 (46_05_10).
5. PREPARE SURFACES OF CONCRETE FOUNDATION IN CONTACT WITH GROUT AS SPECIFIED IN SECTION 15050 (46_05_10).
6. PLACE NON-SHRINK EPOXY GROUT AS SPECIFIED IN SECTION 15050 (46_05_10).
7. AFTER GROUT SETS, TRIM GROUT TO 45 DEGREE CHAMFER.

S322 TYP — EQUIPMENT GROUTING WITH NON-SHRINK EPOXY GROUT

N 12/29/17

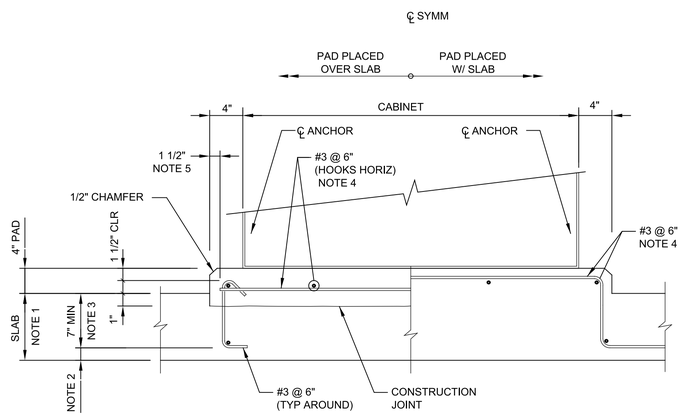

NOTES:

1. SEE STRUCTURAL DRAWINGS FOR THICKNESS OF SLAB BELOW PAD. SLAB REINFORCEMENT NOT SHOWN.
2. SEE S101/ TYP FOR MIN CONCRETE COVER REQUIREMENTS.
3. CONTACT ENGINEER FOR INSTRUCTIONS WHERE HOOK EMBEDMENT IS LESS THAN DIMENSION SHOWN.
4. FOR EQUIPMENT WITH CONDUIT WINDOWS BELOW, ADJUST BAR LOCATIONS TO FIT BETWEEN WINDOWS.
5. LOCATE VERTICAL EDGE OF PAD AND VERTICAL FACE OF #3s USING VERTICAL 2x FORM DURING SLAB PLACEMENT.
6. HOT DIP GALVANIZE WT AND HEADED ANCHOR STUD ASSEMBLY. TOUCH UP GALVANIZING AFTER FIELD WELDING THREADED STUDS.

S350 TYP — ELECTRICAL EQUIPMENT HOUSEKEEPING PAD

S 02/21/14

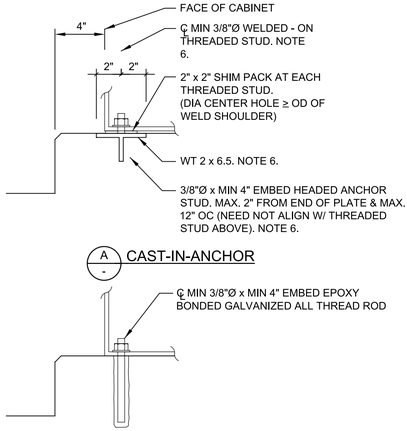

THIS CONFORMED DOCUMENT IS RELEASED FOR THE CONVENIENCE OF THE CONTRACTOR UNDER THE AUTHORITY OF:

DANNY M HURTADO, P.E.
TX LIC NO. 104266

11-01-22
DATE

SEE DISCLAIMER FOR LIMITATIONS OF USE.

CONTRACT DOCUMENTS DATED JUNE 10, 2022, AS PART OF THE BIDDING DOCUMENTS (DRAWINGS AND SPECIFICATIONS) AND SUBSEQUENTLY ISSUED ADDENDA HAVE BEEN MERGED INTO ONE CONFORMING SET OF DOCUMENTS FOR THE CONVENIENCE OF THE CONTRACTOR. IF INCONSISTENCIES OR AMBIGUITIES BETWEEN "CONFORMED" DOCUMENTS AND CONTRACT DOCUMENTS ARE FOUND, THE CONTRACT DOCUMENTS SHALL GOVERN.

CONFORMED DOCUMENTS

REV	DATE	BY	DESCRIPTION

DESIGNED KMD
DRAWN KRJ
CHECKED JDS
DATE NOVEMBER 2022

** ORIGINAL SEALED BY KWASI DUOSE 06-10-22 TX PE 100650 **

carollo® TBPELS No. F-882

CITY OF AUSTIN — FOUNDED 1839

CITY OF AUSTIN

CITY OF AUSTIN
WILD HORSE RANCH WWTP EXPANSION
TYPICAL DETAILS
STRUCTURAL TYPICAL DETAILS 4

VERIFY SCALES
BAR IS ONE INCH ON ORIGINAL DRAWING
0 1"
IF NOT ONE INCH ON THIS SHEET, ADJUST SCALES ACCORDINGLY

JOB NO. 10976A.00
DRAWING NO. 00TS04
SHEET NO. 50 OF 464

PROJECT NO. 10976A10 FILE NAME: 10976A1000TS004.dgn

LAST SAVED BY: idietzel PlotScale: 1:1 DesignScript: Carollo_Std_Pen_v0905.pen ColorTable: gshade.ctb Model: Layout1 User: LDietzel Plot Date: 10-OCT-2022 9:30:18 AM

1. UNLESS OTHERWISE INDICATED ON THE DRAWINGS, MINIMUM WALL REINFORCEMENT SHALL BE AS FOLLOWS:

   A. VERTICAL REINFORCEMENT:
   #5 AT 2'-8" IN GROUTED CELLS. CENTERED IN 8" WALLS. EACH FACE IN 12" WALLS.
   ADDITIONAL REINFORCEMENT (SAME SIZE AS VERTICAL WALL BARS UNO):
   VERTICAL BARS AT CORNERS AND INTERSECTIONS: SEE DETAIL S412/TYP.
   VERTICAL BARS EACH SIDE AT MASONRY CONTROL JOINTS: SEE DETAIL S430/TYP.
   VERTICAL BARS IN FIRST 2 CELLS AT EACH JAMB OF WALL OPENINGS: SEE DETAIL S412/TYP.

   B. HORIZONTAL REINFORCEMENT:
   3/16" DIA LADDER JOINT REINFORCEMENT AT 16" OC VERTICAL. SEE DETAIL S414/TYP.
   HORIZONTAL BOND BEAMS AT LOCATIONS INDICATED IN DETAIL S410/TYP AND IN WALL SECTIONS FOR EACH STRUCTURE.
   BOND BEAM REINFORCEMENT: 1 - #5 IN 8" WALLS. 2 - #5 IN 12" WALLS.

2. LAP SPLICES:

   A. UNLESS OTHERWISE INDICATED ON THE DRAWINGS, THE BARS AT A LAP SPLICE SHALL BE IN CONTACT WITH EACH OTHER.

   B. BAR LAP SPLICES NOT SPECIFIED ON THE DRAWINGS OR IN THE FOLLOWING TABLE SHALL NOT BE LESS THAN 72 BAR DIAMETERS.

   C. THE MASONRY SIDE COVER OVER THE REINFORCING BARS SHALL NOT BE LESS THAN 2 INCHES FROM FACE OF MASONRY TO THE EXTERIOR FACE OF THE BAR.

REINFORCING BAR LAP SPLICES: f'm = 1500 psi, Fy = 60,000 psi				
BAR SIZE	LAP SPLICE LENGTH (INCHES)			
	8" CMU: BAR CENTERED IN WALL	8" CMU: BAR @ FACE OF WALL	12" CMU: BAR CENTERED IN WALL	12" CMU: BAR @ FACE OF WALL
#4	21"	26"	21"	26"
#5	26"	40"	26"	40"
#6	42"	54"	40"	54"
#7	58"	63"	46"	63"

S400 TYP S — MASONRY NOTES — 04/10/17

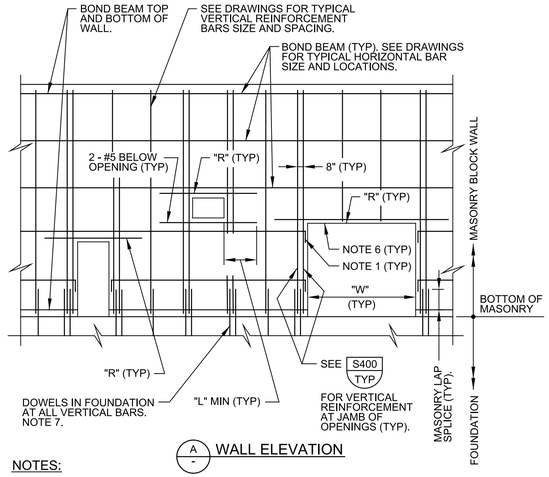

A - WALL ELEVATION

NOTES:

1. ACI STANDARD 90° HOOK ON HORIZONTAL BARS AT OPENINGS.
2. SEE DRAWINGS FOR VERTICAL AND HORIZONTAL REINFORCEMENT SIZE AND SPACING AT EACH STRUCTURE.
3. DO NOT PLACE VERTICAL CONDUITS IN CELLS WITH VERTICAL REINFORCING BARS.
4. SEE DETAIL S412/TYP FOR BOND BEAM REINFORCEMENT AT CORNERS AND INTERSECTIONS.
5. "R" BARS: EXTEND BAR TO "L" DIMENSION INDICATED ON SHEET 2. PROVIDE VERTICAL HOOK AT END IF "L" CANNOT BE ACHIEVED.
6. CHANNEL LINTEL MASONRY UNITS ACROSS OPENINGS. KNOCK-OUT BOND BEAM UNITS BEYOND OPENINGS TO "L."
7. EMBED DOWELS IN CONCRETE PER DETAIL S455/TYP.

S410 TYP S — REINFORCED MASONRY WALL — SHEET 1 OF 2 — 06/01/17

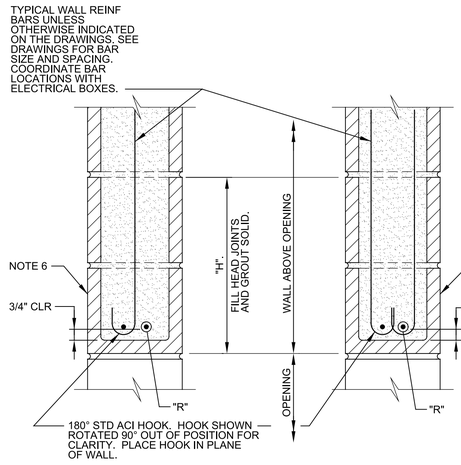

B - LINTEL AT OPENING WITH VERTICAL REINF

C - LINTEL AT OPENING WITH VERTICAL REINF EACH FACE

LINTEL REINFORCEMENT SCHEDULE			
"W"	"R"	"L"	"H"
LESS THAN 5'-0"	2 - #5	2'-6"	16"
GREATER THAN 5'-0" TO 7'-0"	2 - #6	3'-0"	32"
GREATER THAN 7'-0" TO 12'-0"	2 - #7	3'-6"	40"

S410 TYP S — REINFORCED MASONRY WALL — SHEET 2 OF 2 — 06/01/17

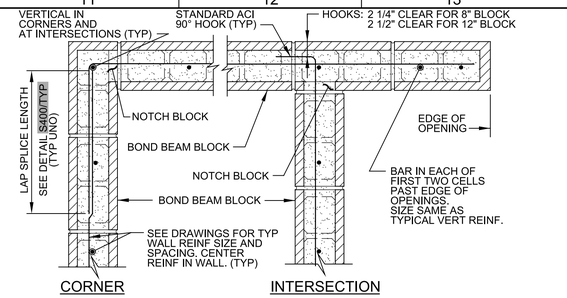

A - SINGLE BAR BOND BEAM

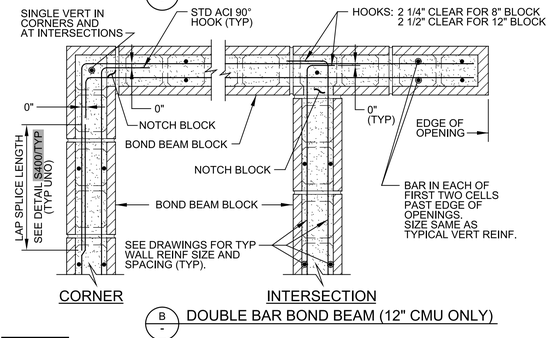

B - DOUBLE BAR BOND BEAM (12" CMU ONLY)

S412 TYP S — MASONRY BOND BEAM REINFORCING — 04/10/17

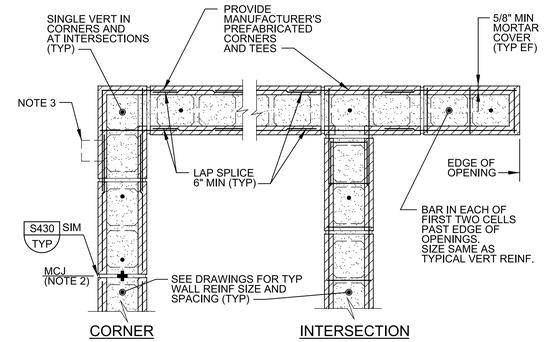

NOTES:

1. PROVIDE HORIZONTAL JOINT REINFORCEMENT AT MAXIMUM 1'-4" OC VERTICAL.
2. DISCONTINUE WIRE REINFORCEMENT ACROSS MASONRY CONTROL JOINTS. PROVIDE MINIMUM 5/8" MORTAR COVER AT CUT ENDS.
3. AT VENEER, PROVIDE TABS AND VENEER TIES PER SPECIFICATIONS.

S414 TYP S — MASONRY JOINT REINFORCEMENT — 04/11/17

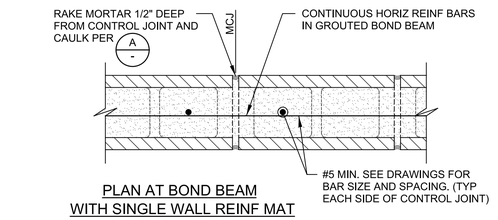

PLAN AT BOND BEAM WITH SINGLE WALL REINF MAT

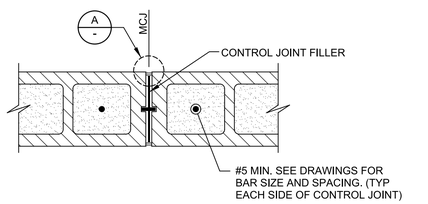

PLAN ABOVE OR BELOW BOND BEAM WITH SINGLE WALL REINF MAT

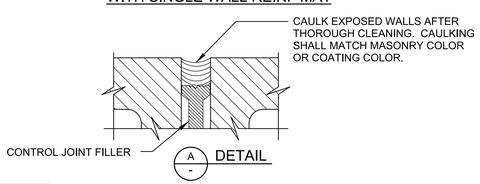

S430 TYP S — MASONRY CONTROL JOINT — SHEET 1 OF 2 — 04/04/17

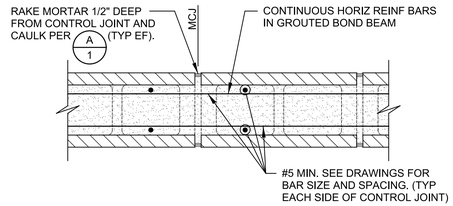

PLAN AT BOND BEAM WITH DOUBLE WALL REINF MAT

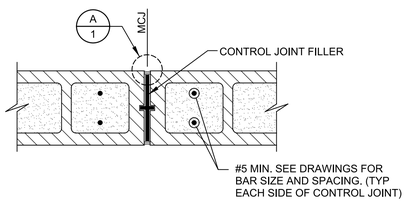

PLAN ABOVE OR BELOW BOND BEAM WITH DOUBLE WALL REINF MAT

S430 TYP S — MASONRY CONTROL JOINT — SHEET 2 OF 2 — 04/04/17

THIS CONFORMED DOCUMENT IS RELEASED FOR THE CONVENIENCE OF THE CONTRACTOR UNDER THE AUTHORITY OF:

11-01-22
DANNY M HURTADO, P.E. DATE
TX LIC NO. 104266

SEE DISCLAIMER FOR LIMITATIONS OF USE.

CONTRACT DOCUMENTS DATED JUNE 10, 2022, AS PART OF THE BIDDING DOCUMENTS (DRAWINGS AND SPECIFICATIONS) AND SUBSEQUENTLY ISSUED ADDENDA HAVE BEEN MERGED INTO ONE CONFORMING SET OF DOCUMENTS FOR THE CONVENIENCE OF THE CONTRACTOR. IF INCONSISTENCIES OR AMBIGUITIES BETWEEN "CONFORMED" DOCUMENTS AND CONTRACT DOCUMENTS ARE FOUND, THE CONTRACT DOCUMENTS SHALL GOVERN.

REV	DATE	BY	DESCRIPTION
			CONFORMED DOCUMENTS

DESIGNED KMD
DRAWN KRJ
CHECKED JDS
DATE NOVEMBER 2022

** ORIGINAL SEALED BY KWASI DUOSE 06-10-22 TX PE 100650 **

carollo® TBPELS No. F-882

CITY OF AUSTIN — FOUNDED 1839

CITY OF AUSTIN

CITY OF AUSTIN
WILD HORSE RANCH WWTP EXPANSION
TYPICAL DETAILS
STRUCTURAL
TYPICAL DETAILS 5

VERIFY SCALES
BAR IS ONE INCH ON ORIGINAL DRAWING
0 1"
IF NOT ONE INCH ON THIS SHEET, ADJUST SCALES ACCORDINGLY

JOB NO. 10976A.00
DRAWING NO. 00TS05
SHEET NO. 51 OF 464

PROJECT NO. 10976A10 FILE NAME: 10976A1000TS005.dgn

Plot Date: 10-OCT-2022 9:32:13 AM
User: LDietzel
PlotScale: 1:1
DesignScript: Carollo_Std_Pen_v0905.pen
ColorTable: gshade.ctb
Model: Layout1
LAST SAVED BY: ldietzel

Plot Date: 10-OCT-2022 9:33:41 AM
User: LDietzel
PlotScale: 1:1
DesignScript: Carollo_Std_Pen_v0905.pen
ColorTable: gshade.ctb
Model: Layout1
LAST SAVED BY: ldietzel

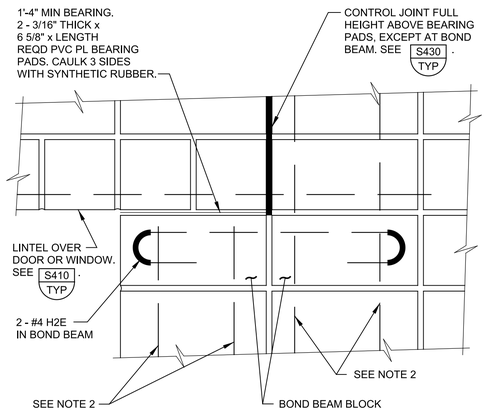

NOTES:

1. ALL BLOCKS BELOW LINTEL BEARING PADS SHALL BE GROUTED SOLID FULL HEIGHT. PROVIDE SMOOTH BEARING SURFACE UNDER PADS.
2. THE BAR SIZE SHALL BE NUMBER 5 MINIMUM, BUT NOT SMALLER THAN THE TYPICAL VERTICAL WALL REINFORCING BARS.

S433 TYP — CONTROL JOINT AT LINTEL

08/01/05

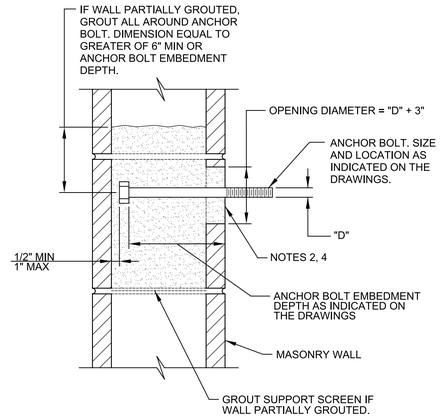

NOTES:

1. "D" = DIAMETER OF ANCHOR BOLT.
2. SET ANCHOR BOLTS WITH TEMPLATE. DO NOT EMBED ADJUSTMENT NUTS IN GROUT AT FACE OF MASONRY.
3. CUT MASONRY WEBS AS REQUIRED TO ALLOW MINIMUM 1/2" GROUT BETWEEN ANCHOR BOLT AND MASONRY SURFACE.
4. REMOVE EXCESS GROUT. LEAVE FINISHED SURFACE FLUSH WITH FACE OF WALL.

S440 TYP S — ANCHOR BOLTS IN MASONRY

04/04/17

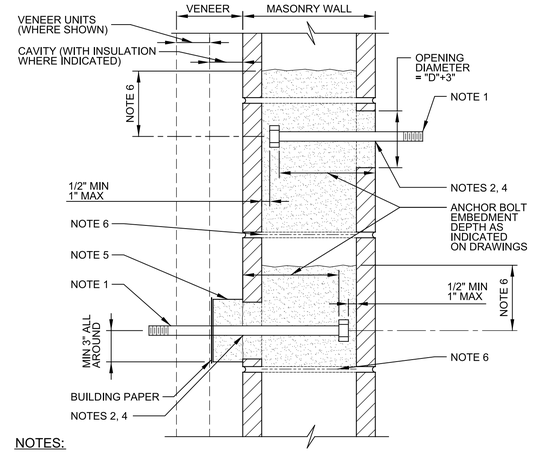

NOTES:

1. "D" = DIAMETER OF ANCHOR BOLT. SEE DRAWINGS FOR SIZE AND LOCATION.
2. SET ANCHOR BOLTS WITH TEMPLATE. DO NOT EMBED ADJUSTMENT NUTS IN GROUT AT FACE OF MASONRY.
3. CUT MASONRY WEBS AS REQUIRED TO ALLOW MINIMUM 1/2" GROUT BETWEEN ANCHOR BOLT AND MASONRY SURFACE.
4. REMOVE EXCESS GROUT. LEAVE FINISHED SURFACE FLUSH WITH FACE OF WALL.
5. AT OUTSIDE FACE WITH VENEER, PROVIDE MINIMUM 6"x6" (OR 6"Ø) GROUT PAD BETWEEN VENEER AND MASONRY WALL. COVER VENEER SIDE WITH MINIMUM 2 LAYERS 30# BUILDING PAPER TO BREAK BOND WITH VENEER UNITS. FILL SPACE BETWEEN PAPER AND VENEER WITH MORTAR TO PROVIDE FIRM BEARING.
6. FOR PARTIALLY GROUTED WALLS: MINIMUM GROUT ALL AROUND ANCHOR BOLT EQUAL TO 1.5 TIMES ANCHOR BOLT EMBEDMENT (6" MINIMUM). PROVIDE GROUT SUPPORT SCREEN BELOW GROUT.

S441 TYP S — ANCHOR BOLTS IN MASONRY WITH VENEER

04/11/17

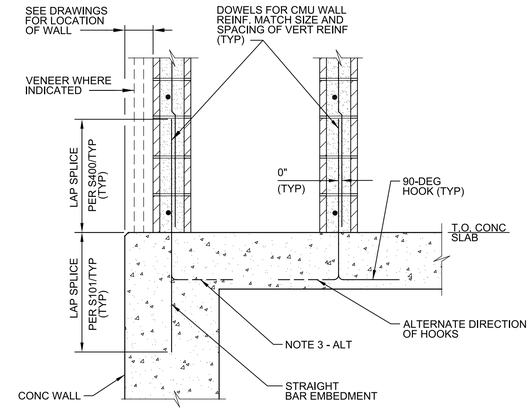

A - SECTION: 8" CMU

NOTES:

1. FOR CMU WALL REINFORCING SIZE AND SPACING, SEE PLANS.
2. VENEER IS NOT SHOWN FOR CLARITY.
3. WHERE STRAIGHT BAR EMBEDMENT IS NOT AVAILABLE, PROVIDE 90-DEGREE HOOKS. ROTATE HOOKS TO PROVIDE REQUIRED CONCRETE COVER.

S455 TYP — CMU WALL TO CONCRETE

SHEET 1 OF 2 01/09/18

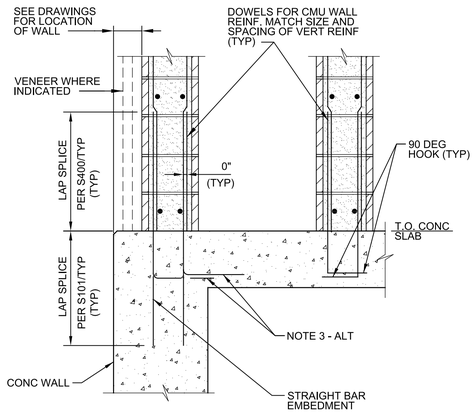

B - SECTION: 12" CMU

S455 TYP — CMU WALL TO CONCRETE

SHEET 2 OF 2 01/09/18

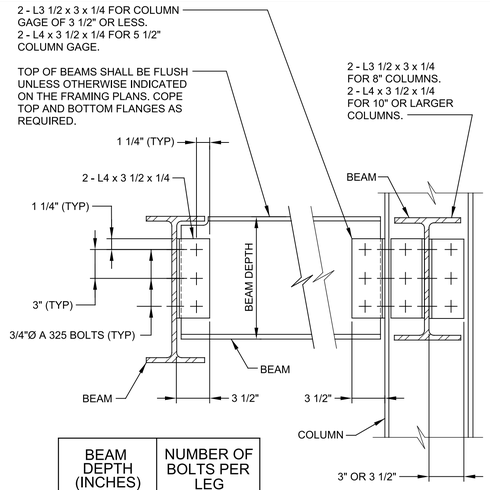

BEAM DEPTH (INCHES)	NUMBER OF BOLTS PER LEG
8 - 10	2
12 - 16	3
18 - 21	4
24 - 30	6

NOTE:

1. SCHEDULE APPLIES TO ALL BEAMS UNLESS NUMBER OF BOLTS PER LEG IS OTHERWISE INDICATED ON THE FRAMING PLAN BY ⬡.

S502 TYP S — STEEL DOUBLE ANGLE BOLTED CONNECTION VERTICAL BOLT LINES

4/30/07

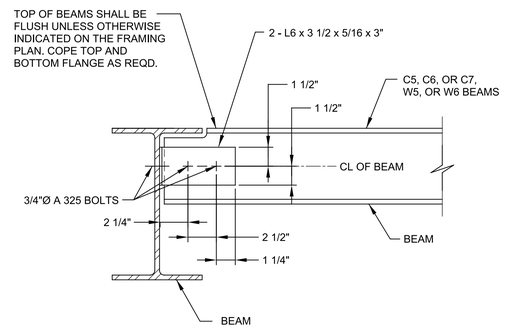

S504 TYP — STEEL DOUBLE ANGLE BOLTED CONNECTION HORIZONTAL BOLT LINES

08/01/05

THIS CONFORMED DOCUMENT IS RELEASED FOR THE CONVENIENCE OF THE CONTRACTOR UNDER THE AUTHORITY OF:

DANNY M HURTADO, P.E.
TX LIC NO. 104266

11-01-22
DATE

SEE DISCLAIMER FOR LIMITATIONS OF USE.

CONTRACT DOCUMENTS DATED JUNE 10, 2022, AS PART OF THE BIDDING DOCUMENTS (DRAWINGS AND SPECIFICATIONS) AND SUBSEQUENTLY ISSUED ADDENDA HAVE BEEN MERGED INTO ONE CONFORMING SET OF DOCUMENTS FOR THE CONVENIENCE OF THE CONTRACTOR. IF INCONSISTENCIES OR AMBIGUITIES BETWEEN "CONFORMED" DOCUMENTS AND CONTRACT DOCUMENTS ARE FOUND, THE CONTRACT DOCUMENTS SHALL GOVERN.

REV	DATE	BY	DESCRIPTION
			CONFORMED DOCUMENTS

DESIGNED KMD
DRAWN KRJ
CHECKED JDS
DATE NOVEMBER 2022

** ORIGINAL SEALED BY KWASI DUOSE 06-10-22 TX PE 100650 **

carollo® TBPELS No. F-882

CITY OF AUSTIN — FOUNDED 1839

CITY OF AUSTIN

CITY OF AUSTIN
WILD HORSE RANCH WWTP EXPANSION
TYPICAL DETAILS
STRUCTURAL
TYPICAL DETAILS 6

VERIFY SCALES
BAR IS ONE INCH ON ORIGINAL DRAWING
0 1"
IF NOT ONE INCH ON THIS SHEET, ADJUST SCALES ACCORDINGLY

JOB NO. 10976A.00
DRAWING NO. 00TS06
SHEET NO. 52 OF 464

PROJECT NO. 10976A10 FILE NAME: 10976A1000TS006.dgn

Plot Date: 10-OCT-2022 9:35:23 AM
User: LDietzel
Model: Layout1 ColorTable: gshade.ctb DesignScript: Carollo_Std_Pen_v0905.pen PlotScale: 1:1
LAST SAVED BY: ldietzel

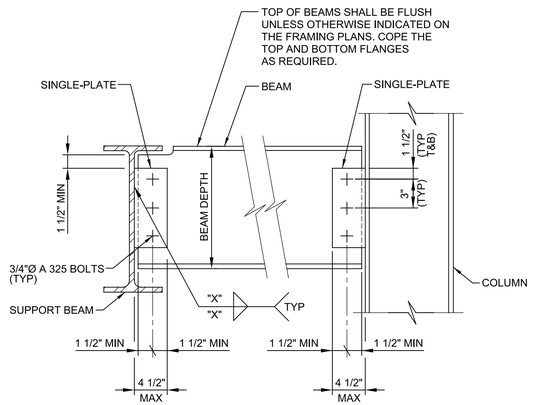

BEAM DEPTH (INCHES)	NUMBER OF BOLTS PER PLATE	PLATE THICKNESS (INCHES)	FILLET WELD SIZE "X" (INCHES)
8-10	2	1/4	3/16
12-16	3	1/4	3/16
18-21	5	3/8	5/16
24-30	7	3/8	5/16

NOTE:

1. SCHEDULE APPLIES TO ALL BEAMS UNLESS NUMBER OF BOLTS PER LEG IS OTHERWISE INDICATED ON THE FRAMING PLAN BY (#) WHERE NUMBER INSIDE SYMBOL = NUMBER OF BOLTS.

S506 TYP — STEEL SINGLE PLATE SHEAR CONNECTION
3/4" DIA BOLTS; ASTM A36 PLATES
N 03/27/19

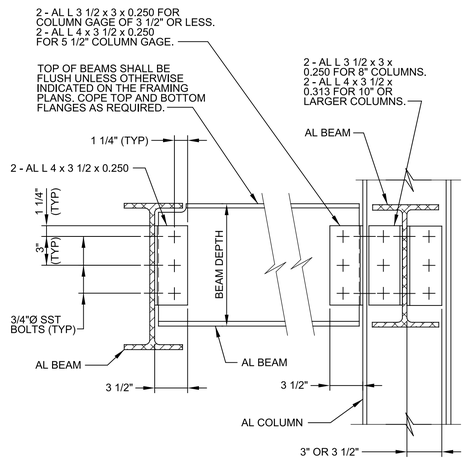

BEAM DEPTH (INCHES)	NUMBER OF BOLTS PER LEG
8 AND 10	2
12	3

NOTE:

1. SCHEDULE APPLIES TO ALL BEAMS UNLESS NUMBER OF BOLTS PER LEG IS OTHERWISE INDICATED ON THE FRAMING PLAN BY ⬡.

S510 TYP — ALUMINUM DOUBLE ANGLE BOLTED CONNECTION
VERTICAL BOLT LINES
08/01/05

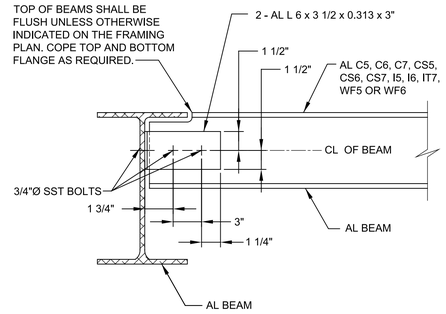

S512 TYP — ALUMINUM DOUBLE ANGLE BOLTED CONNECTION
HORIZONTAL BOLT LINES
08/01/05

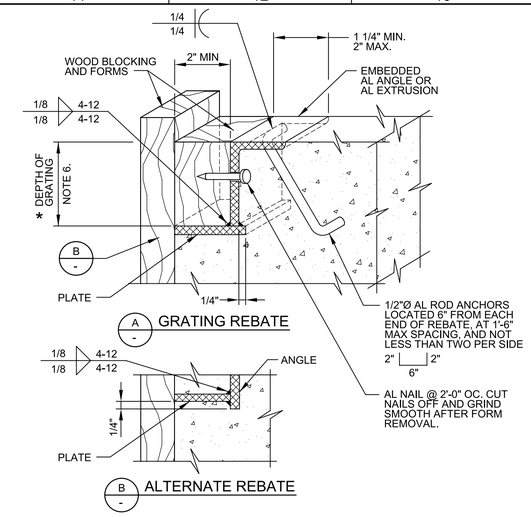

NOTES:

1. SEE SPECIFICATIONS FOR ALUMINUM GRATING.
2. MAKE REBATE AND/OR SEAT CONTINUOUS AROUND OPENING.
3. EMBEDDED REBATE ANGLE AND PLATE SHALL BE 1/4" MINIMUM THICKNESS.
4. REBATE MAY BE EXTRUDED, SUBJECT TO ENGINEER'S ACCEPTANCE.
5. COAT ALUMINUM SURFACES IN CONTACT WITH CONCRETE AS SPECIFIED.
6. * = DIMENSION AS REQUIRED BY GRATING MANUFACTURER. SEE SPECIFICATIONS.

S542 TYP — GRATING - REBATE AND SEAT
ALUMINUM
NS SHEET 1 OF 2 06/21/19

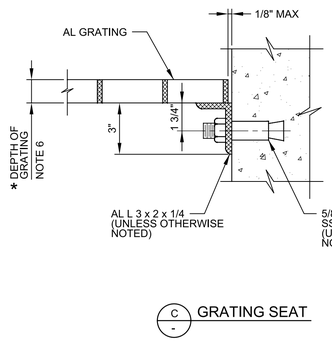

C - GRATING SEAT

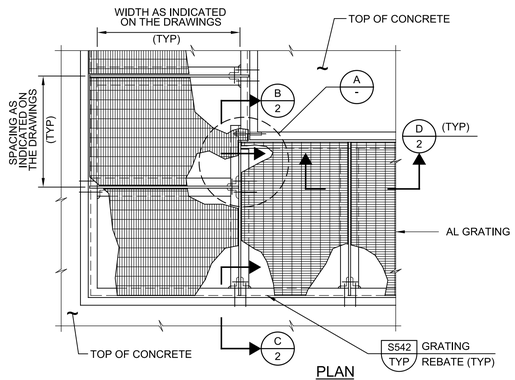

PLAN

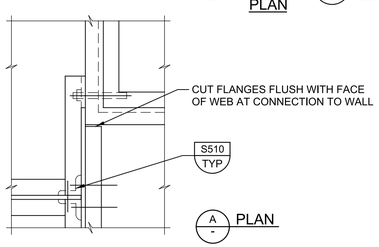

A - PLAN

NOTE:

1. COAT ALUMINUM SURFACES IN CONTACT WITH CONCRETE AS SPECIFIED.

S550 TYP — GRATING - SUPPORT BEAMS
ALUMINUM
N SHEET 1 OF 2 06/21/19

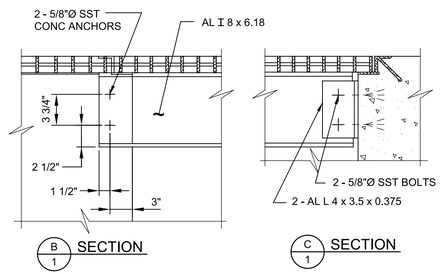

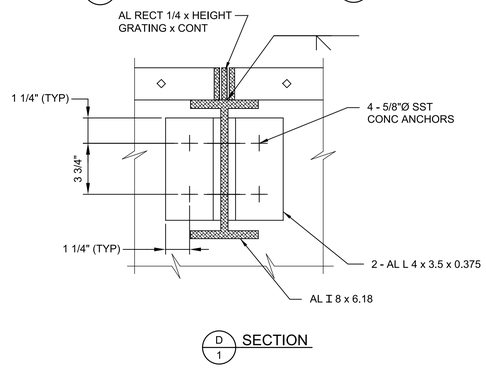

S550 TYP — GRATING - SUPPORT BEAMS
ALUMINUM
N SHEET 2 OF 2 06/21/19

THIS CONFORMED DOCUMENT IS RELEASED FOR THE CONVENIENCE OF THE CONTRACTOR UNDER THE AUTHORITY OF:

11-01-22
DANNY M HURTADO, P.E. DATE
TX LIC NO. 104266

SEE DISCLAIMER FOR LIMITATIONS OF USE.

CONTRACT DOCUMENTS DATED JUNE 10, 2022, AS PART OF THE BIDDING DOCUMENTS (DRAWINGS AND SPECIFICATIONS) AND SUBSEQUENTLY ISSUED ADDENDA HAVE BEEN MERGED INTO ONE CONFORMING SET OF DOCUMENTS FOR THE CONVENIENCE OF THE CONTRACTOR. IF INCONSISTENCIES OR AMBIGUITIES BETWEEN "CONFORMED" DOCUMENTS AND CONTRACT DOCUMENTS ARE FOUND, THE CONTRACT DOCUMENTS SHALL GOVERN.

REV	DATE	BY	DESCRIPTION
			CONFORMED DOCUMENTS

DESIGNED KMD
DRAWN KRJ
CHECKED JDS
DATE NOVEMBER 2022

** ORIGINAL SEALED BY KWASI DUOSE 06-10-22 TX PE 100650 **

carollo® TBPELS No. F-882

CITY OF AUSTIN — FOUNDED 1839

CITY OF AUSTIN

CITY OF AUSTIN
WILD HORSE RANCH WWTP EXPANSION
TYPICAL DETAILS
STRUCTURAL
TYPICAL DETAILS 7

VERIFY SCALES
BAR IS ONE INCH ON ORIGINAL DRAWING
0 1"
IF NOT ONE INCH ON THIS SHEET, ADJUST SCALES ACCORDINGLY

JOB NO. 10976A.00
DRAWING NO. 00TS07
SHEET NO. 53 OF 464

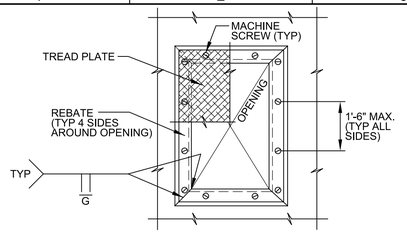

A - PLAN-TREAD PLATE AND REBATE (WITHOUT HINGES OR HANDLE)

NOTES:

1. REBATE MAY BE EXTRUDED SUBJECT TO ENGINEER'S ACCEPTANCE.
2. COAT ALUMINUM SURFACES IN CONTACT WITH CONCRETE AS SPECIFIED.
3. OMIT PERIMETER MACHINE SCREWS WHERE HINGE IS INDICATED ON THE DRAWINGS.
4. PROVIDE HINGE AND HANDLE WHERE INDICATED ON THE DRAWINGS.
5. TREAD PLATE SHALL BE FABRICATED IN UNITS THAT DO NOT WEIGH MORE THAN 75 POUNDS.
6. "T" = TREAD PLATE THICKNESS IN INCHES. AS SCHEDULED IN TABLE BELOW:
   TREAD PLATE LIVE LOAD SHALL BE SAME AS FLOOR LIVE LOAD.
   ★ 3/8" PLATE WITH AL T 3.00 x 3.00 x 2.72 STIFFENERS. SEE SECTIONS F, G, AND H ON SHEET 3 OF 3.

LIVE LOAD (PSF)	SHORTER SPAN "L" (FT-IN)					
	12"	1'-6"	2'-0"	2'-6"	3'-0"	4'-0"
100	3/16	1/4	3/8	1/2	1/2	3/8 ★
150	1/4	3/8	1/2	1/2	3/8 ★	3/8 ★
200	1/4	3/8	1/2	3/8 ★	3/8 ★	3/8 ★
250	1/4	3/8	1/2	3/8 ★	3/8 ★	3/8 ★
300	1/4	3/8	1/2	3/8 ★	3/8 ★	3/8 ★
350	3/8	1/2	3/8 ★	3/8 ★	3/8 ★	3/8 ★
400	3/8	1/2	3/8 ★	3/8 ★	3/8 ★	3/8 ★

S562 TYP — COVER - TREAD PLATE, SINGLE - ALUMINUM

NS SHEET 1 OF 3 06/21/19

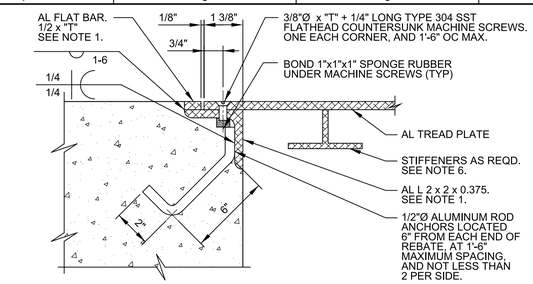

A - REBATE DETAIL - WITHOUT HINGE

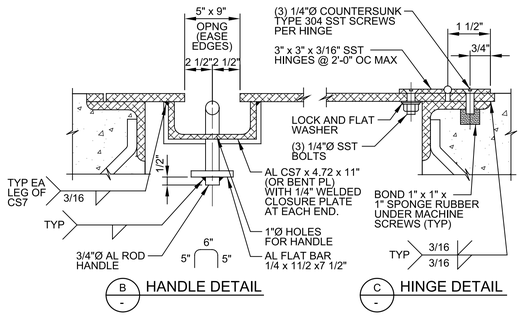

B - HANDLE DETAIL

C - HINGE DETAIL

S562 TYP — COVER - TREAD PLATE, SINGLE - ALUMINUM

NS SHEET 2 OF 3 06/21/19

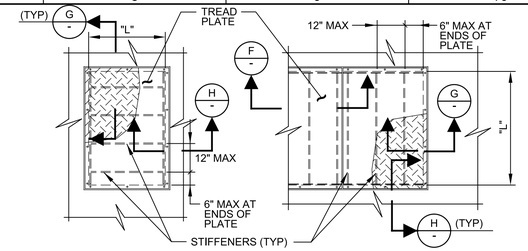

D - PLAN - PLATE SUPPORTED ON 4 SIDES

E - PLAN - PLATE SUPPORTED ON 2 SIDES

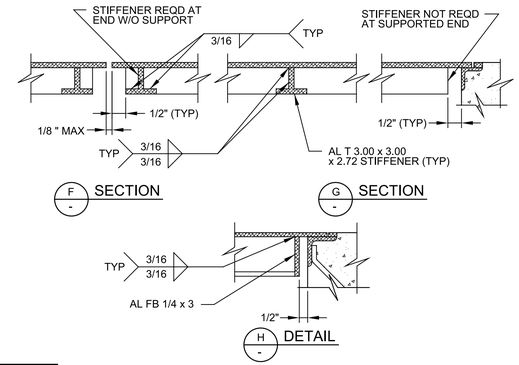

F - SECTION

G - SECTION

H - DETAIL

S562 TYP — COVER - TREAD PLATE, SINGLE - ALUMINUM

NS SHEET 3 OF 3 06/21/19

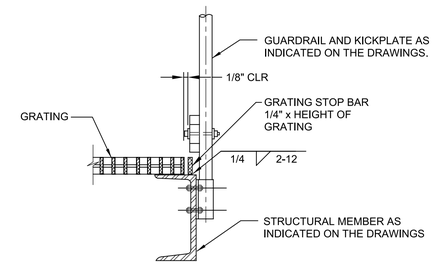

NOTES:

1. GRATING STOP SHALL BE INSTALLED ON ALL GRATING PLATFORMS AND LANDINGS SHALL BE CONTINUOUS ON ALL SIDES OF PLATFORMS NOT OTHERWISE COVERED BY A REBATE, SEAT, OR OTHER SIMILAR DETAIL. GRATING STOPS SHALL BE DISCONTINUOUS AT STAIRS BUT SHALL SERVE TO HOLD LANDING PANEL AT STAIRWAYS IN PLACE.
2. GRATING STOP SHALL BE OF THE SAME MATERIAL AS THE STRUCTURAL MEMBER.

S557 TYP — GRATING - EDGE STOP (ALL MATERIALS)

06/21/19

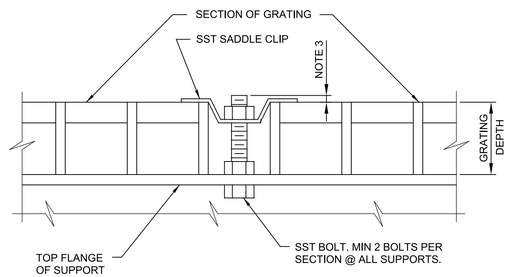

NOTES:

1. GRATING FASTENERS SHALL BE INSTALLED WHERE INDICATED ON THE DRAWINGS.
2. GRATING FASTENERS SHALL BE INSTALLED AT EACH CORNER OF EACH PANEL AND AT SPACING NOT TO EXCEED 8'-0".
3. RECESS THE GRATING CLIP WITHIN THE DEPTH OF THE GRATING TO AVOID A TRIPPING HAZARD.

S559 TYP — GRATING - FASTENERS (ALL MATERIALS)

03/16/21

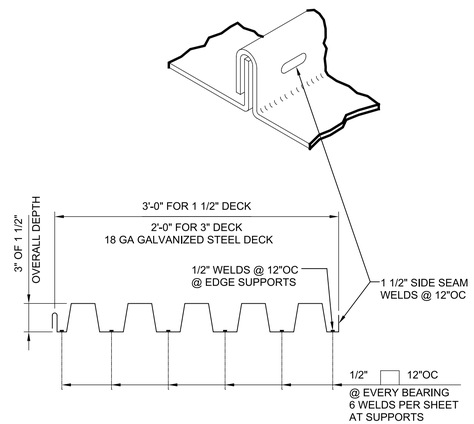

ALL WELDS: 1/2" REPRESENTS THE EFFECTIVE DIAM. WELD

1 1/2" DECK

MIN I = .302 IN^4
MIN S = .322 IN^3
MIN HORIZ SHEAR = 600 PLF

3" DECK

MIN I = 1.223 IN^4
MIN S = .731 IN^3
MIN HORIZ SHEAR = 900 PLF

S706 TYP R — STEEL ROOF DECK

02/27/08

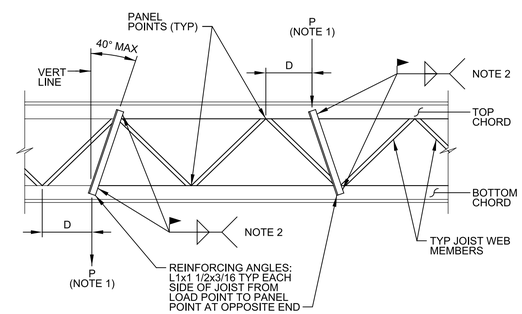

NOTES:

1. "P" REPRESENTS CONCENTRATED LOAD FROM EQUIPMENT OR FIXTURES. WHERE P IS 50 POUNDS OR MORE AND WHERE THE DISTANCE FROM LOAD POINT TO PANEL POINT (D) EXCEEDS 4". INSTALL REINFORCING ANGLE FROM LOAD POINT TO PANEL POINT ON OPPOSITE CHORD OF JOIST.
2. WELD: EFFECTIVE THROAT: THICKNESS OF THINNER STEEL MEMBER MINUS 1/16". LENGTH: MINIMUM 3/4" EACH SIDE.

S740 TYP S — STEEL JOIST REINFORCEMENT AT LOAD POINTS

12/20/13

THIS CONFORMED DOCUMENT IS RELEASED FOR THE CONVENIENCE OF THE CONTRACTOR UNDER THE AUTHORITY OF:

DANNY M HURTADO, P.E. — 11-01-22 DATE
TX LIC NO. 104266

SEE DISCLAIMER FOR LIMITATIONS OF USE.

CONTRACT DOCUMENTS DATED JUNE 10, 2022, AS PART OF THE BIDDING DOCUMENTS (DRAWINGS AND SPECIFICATIONS) AND SUBSEQUENTLY ISSUED ADDENDA HAVE BEEN MERGED INTO ONE CONFORMING SET OF DOCUMENTS FOR THE CONVENIENCE OF THE CONTRACTOR. IF INCONSISTENCIES OR AMBIGUITIES BETWEEN "CONFORMED" DOCUMENTS AND CONTRACT DOCUMENTS ARE FOUND, THE CONTRACT DOCUMENTS SHALL GOVERN.

CONFORMED DOCUMENTS

REV	DATE	BY	DESCRIPTION

DESIGNED KMD
DRAWN KRJ
CHECKED JDS
DATE NOVEMBER 2022

** ORIGINAL SEALED BY KWASI DUOSE 06-10-22 TX PE 100650 **

carollo® TBPELS No. F-882

CITY OF AUSTIN

CITY OF AUSTIN
WILD HORSE RANCH WWTP EXPANSION
TYPICAL DETAILS
STRUCTURAL
TYPICAL DETAILS 8

VERIFY SCALES
BAR IS ONE INCH ON ORIGINAL DRAWING
0 1"
IF NOT ONE INCH ON THIS SHEET, ADJUST SCALES ACCORDINGLY

JOB NO. 10976A.00
DRAWING NO. 00TS08
SHEET NO. 54 OF 464

PROJECT NO. 10976A10 FILE NAME: 10976A1000TS008.dgn

LAST SAVED BY: jhill Model: Layout1 ColorTable: gshade.ctb DesignScript: Carollo_Std_Pen_v0905.pen PlotScale: 1:1 Plot Date: 10-OCT-2022 9:36:47 AM User: LDietzel

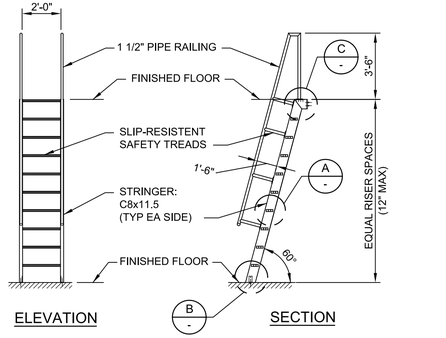

S963 TYP — SHIPS LADDER

N 10/08/13

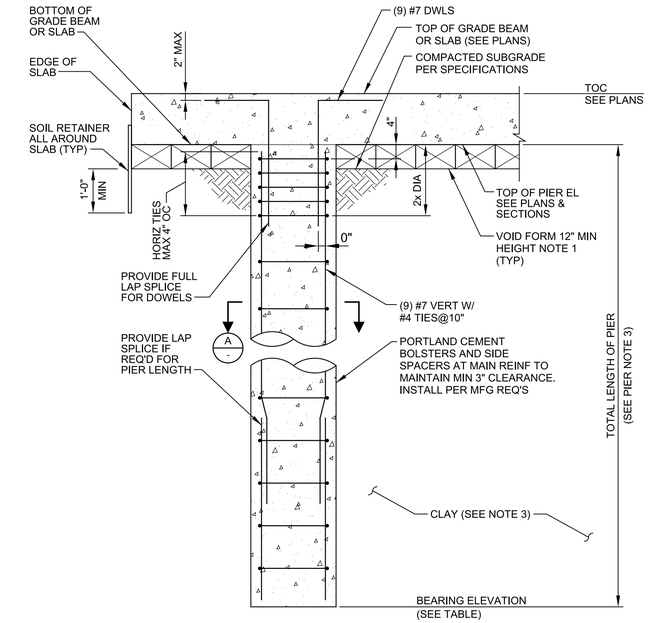

S964 TYP — TYPICAL VOID FORM & PIER DETAIL

J 06/01/21

PIER NOTES:

1. CONTRACTOR'S OPTION TO PROVIDE BAR TERMINATOR RATHER THAN STANDARD HOOK.
2. SPIRALS MAY BE USED IN LIEU OF HORIZONTAL TIES SHOWN. FABRICATE SPIRALS TO CONFORM TO ACI 318 REQUIREMENTS. IF LAPS ARE REQUIRED, LAP AND TIE IN ACCORDANCE WITH ACI 318 REQUIREMENTS AND AS APPROVED BY THE ENGINEER.
3. BEARING ELEVATIONS ARE APPROXIMATE AND ARE FOR BIDDING PURPOSES ONLY. ACTUAL BEARING ELEVATIONS SHALL BE VERIFIED IN THE FIELD BY THE GEOTECHNICAL ENGINEER.
4. FOR SLAB/BEAM REINFORCING SEE DRAWINGS. LAP TOP BARS OF BEAMS (OR SLABS) BETWEEN PIERS OR COLUMNS OR WALLS AND LAP BOTTOM BARS OF BEAMS (OR SLABS) AT PIERS OR WALL SUPPORTS. AT SLABS, LAP TOP BARS BETWEEN BEAMS AND LAP BOTTOM BARS AT BEAMS.

AREA NUMBER	STRUCTURE	BEARING ELEVATION
20	HEADWORKS	438.00
25	HEADWORKS ODOR CONTROL	454.50
75	THICKENING BUILDING	453.50
85	SUBSTATION NO. 1	455.50
90	ADMINISTRATION BUILDING	438.00

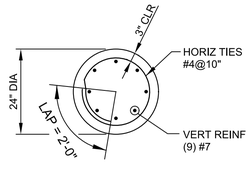

THIS CONFORMED DOCUMENT IS RELEASED FOR THE CONVENIENCE OF THE CONTRACTOR UNDER THE AUTHORITY OF:

11-01-22

DANNY M HURTADO, P.E. DATE
TX LIC NO. 104266

SEE DISCLAIMER FOR LIMITATIONS OF USE.

CONTRACT DOCUMENTS DATED JUNE 10, 2022, AS PART OF THE BIDDING DOCUMENTS (DRAWINGS AND SPECIFICATIONS) AND SUBSEQUENTLY ISSUED ADDENDA HAVE BEEN MERGED INTO ONE CONFORMING SET OF DOCUMENTS FOR THE CONVENIENCE OF THE CONTRACTOR. IF INCONSISTENCIES OR AMBIGUITIES BETWEEN "CONFORMED" DOCUMENTS AND CONTRACT DOCUMENTS ARE FOUND, THE CONTRACT DOCUMENTS SHALL GOVERN.

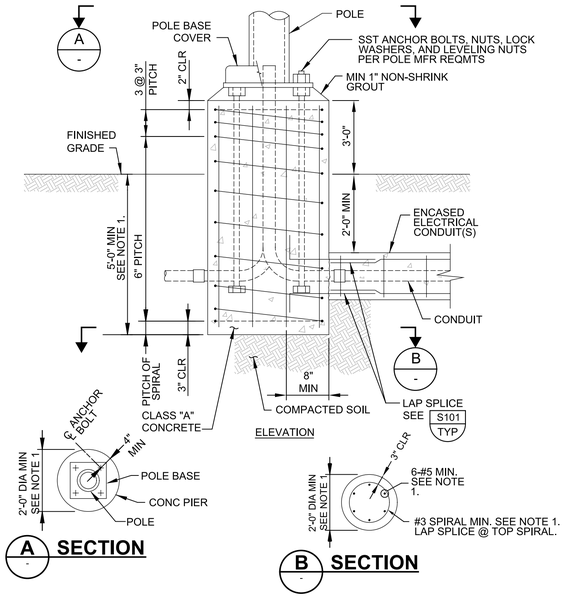

1. USE MINIMUM DIMENSIONS AND REINFORCEMENT SHOWN UNLESS OTHERWISE NOTED. PROVIDE WIND LOAD CALCULATIONS AND INCREASE DIMENSIONS AND INCREASE DIMENSIONS AS REQUIRED.

S970 TYP S — POLE FOUNDATION TRAFFIC AREAS

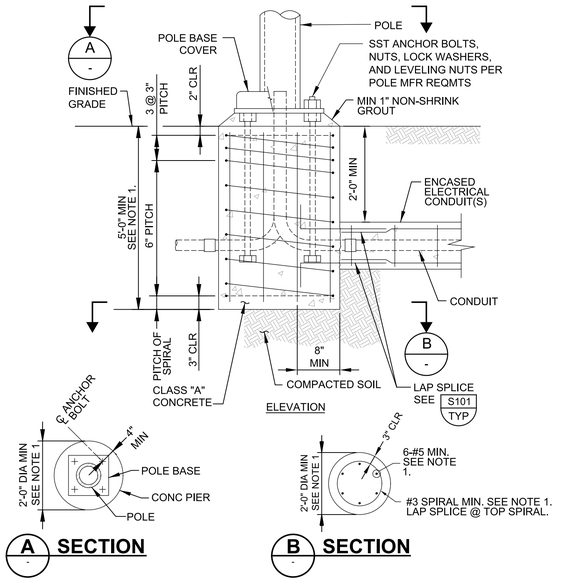

1. USE MINIMUM DIMENSIONS AND REINFORCEMENT SHOWN UNLESS OTHERWISE NOTED. PROVIDE WIND LOAD CALCULATIONS AND INCREASE DIMENSIONS AND INCREASE DIMENSIONS AS REQUIRED.

S971 TYP S — POLE FOUNDATION NON-TRAFFIC AREAS

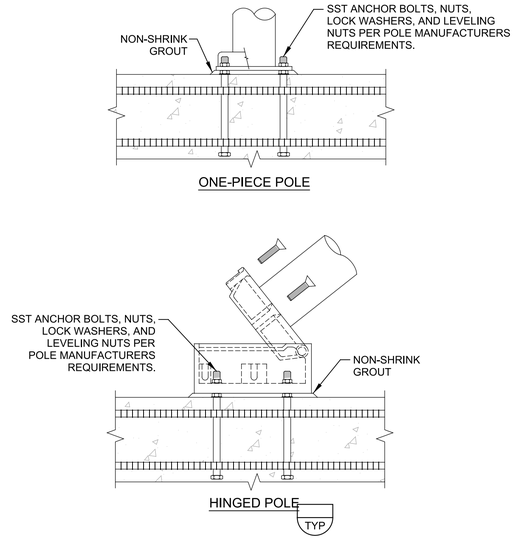

S972 TYP S — ANCHOR BASE FOR LIGHT POLE MOUNTED ON SLAB

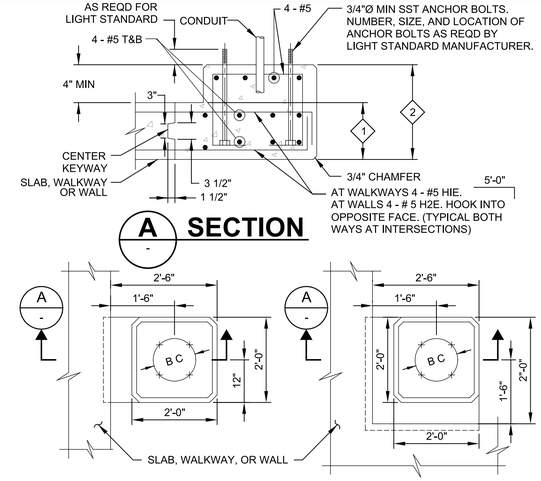

NOTES:

1. SEE ELECTRICAL DRAWINGS FOR CONDUIT ROUTING.
2. B C: BOLT CIRCLE.

KEY NOTES:

1. MATCH SLAB OR WALKWAY THICKNESS.
2. THICKNESS IS EQUAL TO ANCHOR BOLT EMBEDMENT PLUS 4".

S973 TYP S — LIGHTING STANDARD MOUNTED ON CONCRETE

REV	DATE	BY	DESCRIPTION
			CONFORMED DOCUMENTS

DESIGNED KMD
DRAWN KRJ
CHECKED JDS
DATE NOVEMBER 2022

** ORIGINAL SEALED BY KWASI DUOSE 06-10-22 TX PE 100650 **

carollo® TBPELS No. F-882

CITY OF AUSTIN — FOUNDED 1839

CITY OF AUSTIN

CITY OF AUSTIN
WILD HORSE RANCH WWTP EXPANSION
TYPICAL DETAILS
STRUCTURAL
TYPICAL DETAILS 9

VERIFY SCALES
BAR IS ONE INCH ON ORIGINAL DRAWING
0 1"
IF NOT ONE INCH ON THIS SHEET, ADJUST SCALES ACCORDINGLY

JOB NO. 10976A.00
DRAWING NO. 00TS09
SHEET NO. 55 OF 464

Plot Date: 10-OCT-2022 9:39:34 AM
User: LDietzel
Model: Layout1 ColorTable: gshade.ctb DesignScript: Carollo_Std_Pen_v0905.pen PlotScale: 1:1
LAST SAVED BY: ldietzel

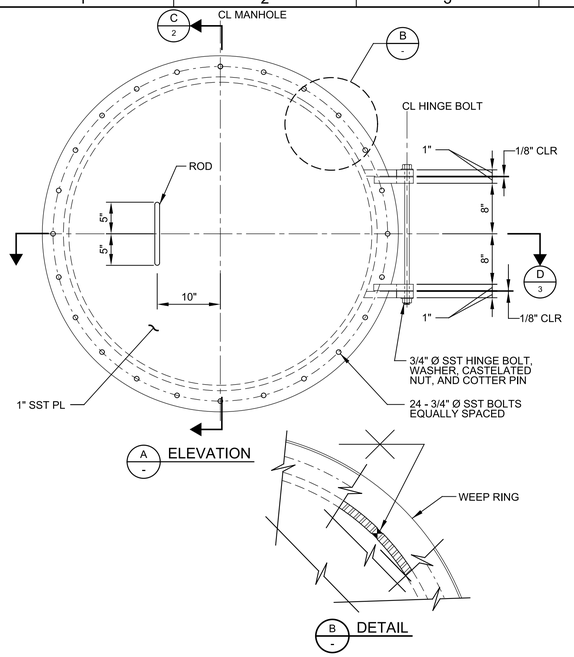

M132 TYP — CIRCULAR DIGESTER ACCESS HATCH

N

SHEET 1 OF 4 03/01/10

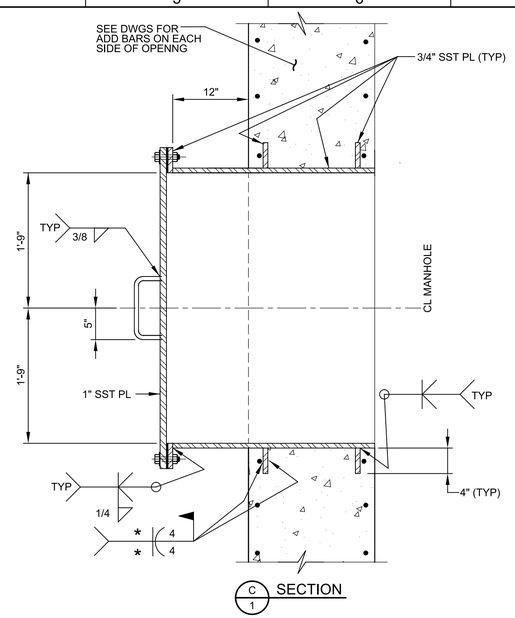

M132 TYP — CIRCULAR DIGESTER ACCESS HATCH

N

SHEET 2 OF 4 03/01/10

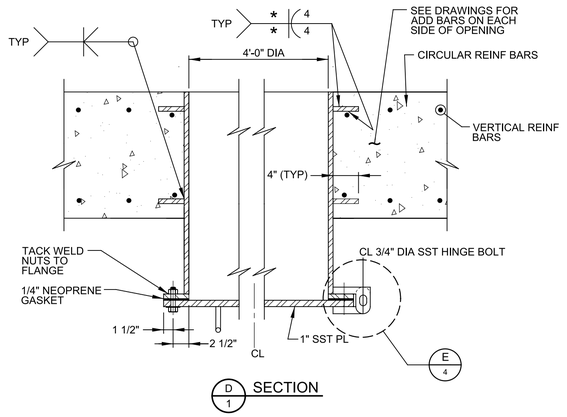

NOTES:

1. * = 1/3 BAR DIAMETER.
2. ALL BOLTS AND NUTS SHALL CONFORM TO IFI-104 GRADE 316L. ALL NUTS SHALL BE HEAVY HEX TYPE.
3. IF REQUIRED FOR UNIFORM BEARING AND WATER TIGHT SEAL, MACHINE CONTACT SURFACES OF MANHOLE FRAME AND COVER.
4. GREASE CONTACT SURFACES OF NEOPRENE GASKET AND PLATE.
5. OVER WIDTH OF FRAME, BEND VERTICAL BARS SO THAT THEY CAN BE WELDED TO INSIDE FACE OF WEEP RINGS. SLOPE OF VERTICAL BARS SHALL NOT EXCEED 1 HORZ TO 12 VERT.
6. FABRICATE ACCESS HATCH USING TYPE 316 SST.

M132 TYP — CIRCULAR DIGESTER ACCESS HATCH

N

SHEET 3 OF 4 03/01/10

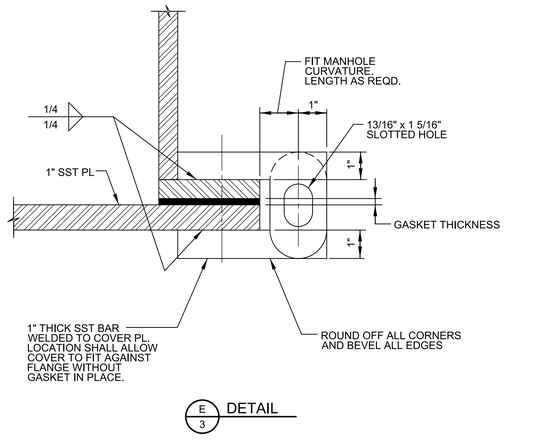

M132 TYP — CIRCULAR DIGESTER ACCESS HATCH

N

SHEET 4 OF 4 03/01/10

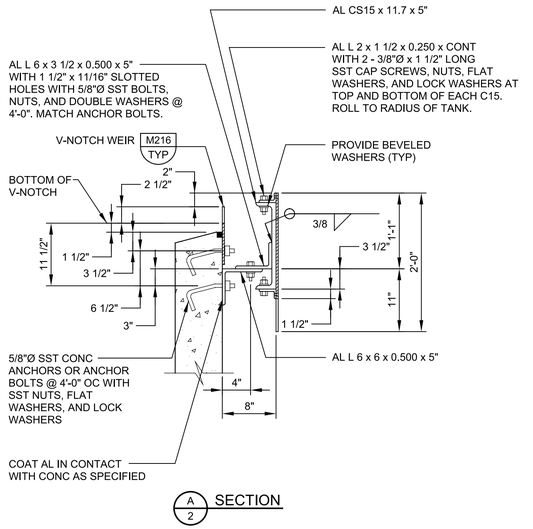

NOTE:

1. DEEPEN BAFFLE AT SCUM BOX AS INDICATED ON THE DRAWINGS.

M210 TYP — SCUM BAFFLE SUPPORT

SHEET 1 OF 2 08/01/05

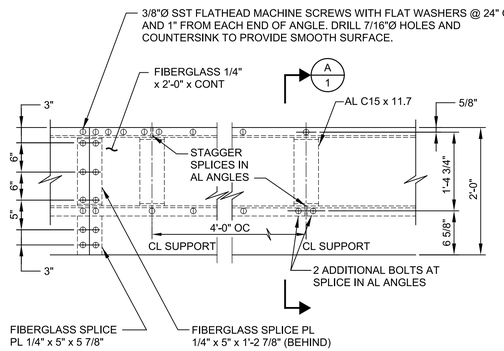

ELEVATION

M210 TYP — SCUM BAFFLE SUPPORT

SHEET 2 OF 2 08/01/05

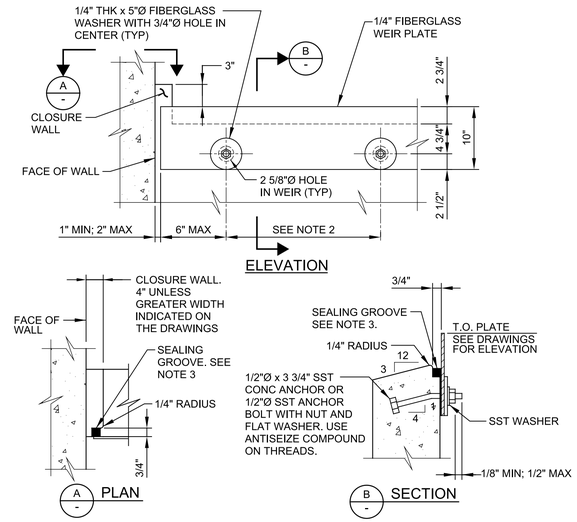

NOTES:

1. ALL EDGES, VOIDS, AND SPLICES SHALL BE SEALED WATERTIGHT WITH SYNTHETIC RUBBER SEALING COMPOUND.
2. ANCHOR BOLT SPACING = 12" OC MAX FOR STRAIGHT WEIRS AND 2'-0" OC MAX FOR CIRCULAR WEIRS.
3. AT BOTTOM AND ENDS OF CONCRETE OPENING FOR WEIR, CONSTRUCT 1" DEEP x 3/4" WIDE SEALING GROOVE. PLACE BOND BREAK TAPE ON BOTTOM (HORIZONTAL) AND BACK (VERTICAL) FACES OF GROOVE. FILL GROOVE WITH 3/4" DEEP SYNTHETIC RUBBER SEALING COMPOUND TO BOTTOM RADIUSED CORNERS.

M214 TYP — PLAIN WEIR

NS

08/05/13

THIS CONFORMED DOCUMENT IS RELEASED FOR THE CONVENIENCE OF THE CONTRACTOR UNDER THE AUTHORITY OF:

DANNY M HURTADO, P.E.
TX LIC NO. 104266

11-01-22
DATE

SEE DISCLAIMER FOR LIMITATIONS OF USE.

CONTRACT DOCUMENTS DATED JUNE 10, 2022, AS PART OF THE BIDDING DOCUMENTS (DRAWINGS AND SPECIFICATIONS) AND SUBSEQUENTLY ISSUED ADDENDA HAVE BEEN MERGED INTO ONE CONFORMING SET OF DOCUMENTS FOR THE CONVENIENCE OF THE CONTRACTOR. IF INCONSISTENCIES OR AMBIGUITIES BETWEEN "CONFORMED" DOCUMENTS AND CONTRACT DOCUMENTS ARE FOUND, THE CONTRACT DOCUMENTS SHALL GOVERN.

REV	DATE	BY	DESCRIPTION
			CONFORMED DOCUMENTS

DESIGNED DMH
DRAWN SDW
CHECKED JPH
DATE NOVEMBER 2022

** ORIGINAL SEALED BY DANNY M. HURTADO 06-10-22 TX PE 104266 **

carollo® TBPELS No. F-882

CITY OF AUSTIN — FOUNDED 1839

CITY OF AUSTIN

CITY OF AUSTIN
WILD HORSE RANCH WWTP EXPANSION
TYPICAL DETAILS
MECHANICAL
TYPICAL DETAILS 1

VERIFY SCALES
BAR IS ONE INCH ON ORIGINAL DRAWING
0 1"
IF NOT ONE INCH ON THIS SHEET, ADJUST SCALES ACCORDINGLY

JOB NO. 10976A.00
DRAWING NO. 00TM01
SHEET NO. 56 OF 464

PROJECT NO. 10976A10 FILE NAME: 10976A10TM001.dgn

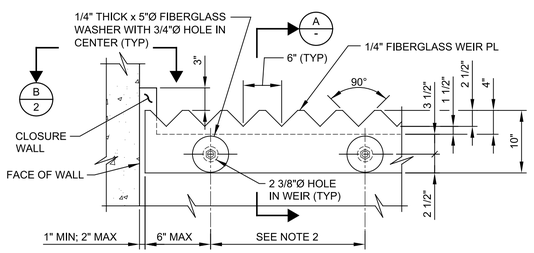

ELEVATION

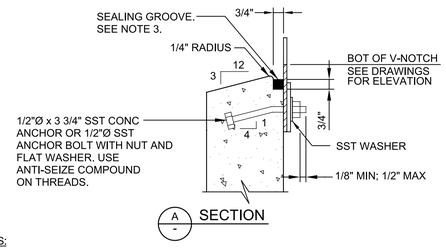

SECTION

NOTES:

1. ALL EDGES, VOIDS, AND SPLICES SHALL BE SEALED WATER TIGHT WITH SYNTHETIC RUBBER SEALING COMPOUND.
2. ANCHOR BOLT SPACING = 12" OC MAX FOR STRAIGHT WEIRS AND 2'-0" OC MAX FOR CIRCULAR WEIRS.
3. AT BOTTOM AND ENDS OF CONCRETE OPENING FOR WEIR, CONSTRUCT 1" DEEP x 3/4" WIDE SEALING GROOVE. PLACE BOND BREAK TAPE ON BOTTOM (HORIZONTAL) AND BACK (VERTICAL) FACES OF GROOVE. FILL GROOVE WITH 3/4" DEEP SYNTHETIC RUBBER SEALING COMPOUND FILLED TO BOTTOM RADIUSED CORNERS.

M216 TYP — V-NOTCHED WEIR

NS — SHEET 1 OF 2 — 09/16/13

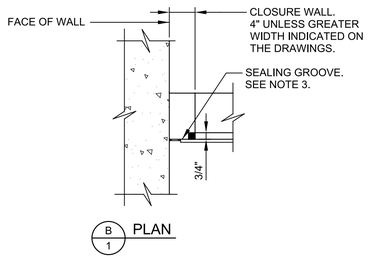

PLAN

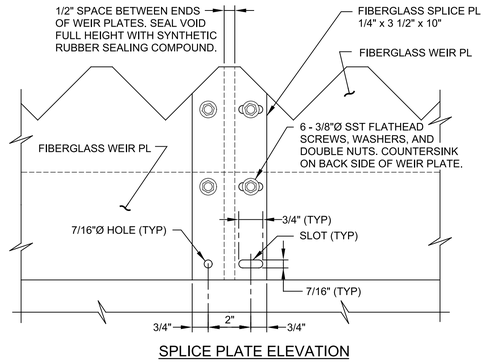

SPLICE PLATE ELEVATION

M216 TYP — V-NOTCHED WEIR

NS — SHEET 2 OF 2 — 09/16/13

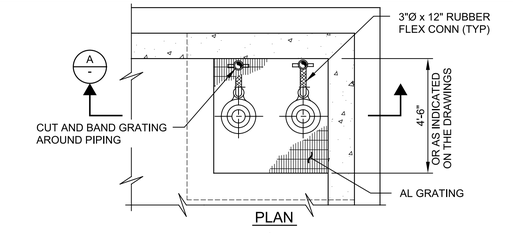

PLAN

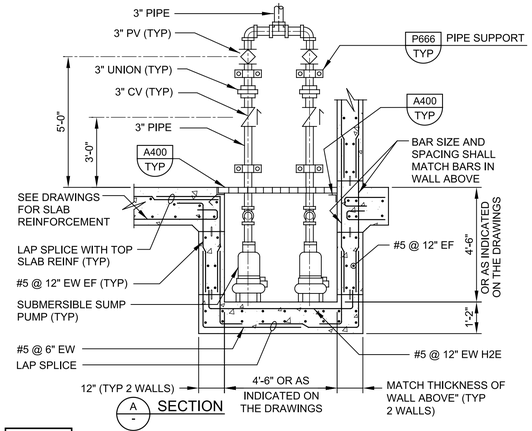

SECTION

M242 TYP — DUPLEX SUBMERSIBLE SUMP PUMP

04/30/07

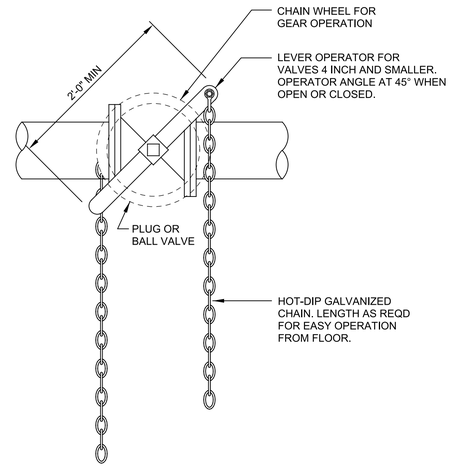

M256 TYP — CHAIN OPERATOR

S — 08/01/05

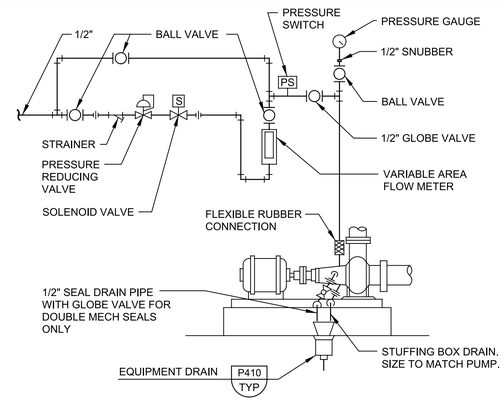

NOTES:

1. THIS INSTALLATION IS TO BE USED AT ALL PUMPS WITH SEAL WATER/FLUSH.
2. FLOW METER CAPACITY AND PIPING SYSTEM SHALL MEET PUMP AND SEAL MANUFACTURERS REQUIREMENTS.
3. UNLESS SPECIFIED OTHERWISE, ALL PIPING SHALL BE GSP.
4. WALL MOUNT EQUIPMENT IF NEAREST WALL IS WITHIN TEN FEET OF PUMP. IF PUMP IS NOT WITHIN 10 FEET OF WALL, MOUNT ON ALUMINUM STAND. SEE EM202 TYP FOR ALUMINUM STAND MOUNTING DETAIL.
5. WHERE A DRIP PAN IS SPECIFIED AND/OR PROVIDED ON THE PUMP BASE, A SEPARATE DRAIN LINE TO THE EQUIPMENT DRAIN SHALL BE PROVIDED.
6. WHEN AN INDICATING FLOW SWITCH IS USED, DELETE THE VARIABLE AREA FLOW METER.

M262 TYP — SEAL WATER PIPING

N — 05/31/19

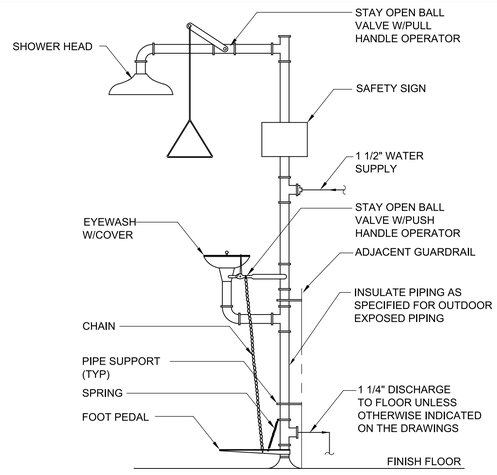

SHOWER TO BE BRADLEY MODEL S19-304GAB

NOTES:

1. INSULATION JACKET NOT SHOWN FOR CLARITY.
2. THE EMERGENCY SHOWER & EYE/FACE WASH SHALL BE SUPPLIED WITH A FREEZE PROTECTION VALVE.
3. CONTRACTOR TO COORDINATE DISCHARGE PIPE CONNECTION WITH MANUFACTURER.

M270 TYP — EMERGENCY SHOWER & EYEWASH FREEZE PROTECTED

J — 03/19/13

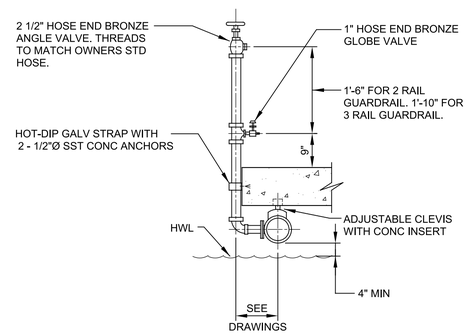

M272 TYP — 1" AND 2 1/2" HOSE VALVE

N — 08/01/05

THIS CONFORMED DOCUMENT IS RELEASED FOR THE CONVENIENCE OF THE CONTRACTOR UNDER THE AUTHORITY OF:

11-01-22

DANNY M HURTADO, P.E. — DATE
TX LIC NO. 104266

SEE DISCLAIMER FOR LIMITATIONS OF USE.

CONTRACT DOCUMENTS DATED JUNE 10, 2022, AS PART OF THE BIDDING DOCUMENTS (DRAWINGS AND SPECIFICATIONS) AND SUBSEQUENTLY ISSUED ADDENDA HAVE BEEN MERGED INTO ONE CONFORMING SET OF DOCUMENTS FOR THE CONVENIENCE OF THE CONTRACTOR. IF INCONSISTENCIES OR AMBIGUITIES BETWEEN "CONFORMED" DOCUMENTS AND CONTRACT DOCUMENTS ARE FOUND, THE CONTRACT DOCUMENTS SHALL GOVERN.

REV	DATE	BY	DESCRIPTION
			CONFORMED DOCUMENTS

DESIGNED DMH
DRAWN SDW
CHECKED JPH
DATE NOVEMBER 2022

** ORIGINAL SEALED BY DANNY M. HURTADO 06-10-22 TX PE 104266 **

carollo® TBPELS No. F-882

CITY OF AUSTIN — FOUNDED 1839

CITY OF AUSTIN

CITY OF AUSTIN
WILD HORSE RANCH WWTP EXPANSION
TYPICAL DETAILS
MECHANICAL
TYPICAL DETAILS 2

VERIFY SCALES
BAR IS ONE INCH ON ORIGINAL DRAWING
0 1"
IF NOT ONE INCH ON THIS SHEET, ADJUST SCALES ACCORDINGLY

JOB NO. 10976A.00
DRAWING NO. 00TM02
SHEET NO. 57 OF 464

PROJECT NO. 10976A10 FILE NAME: 10976A10TM002.dgn

LAST SAVED BY: idietzel Model: Layout1 ColorTable: gshade.ctb DesignScript: Carollo_Std_Pen_v0905.pen PlotScale: 1:1 Plot Date: 10-OCT-2022 9:40:53 AM User: LDietzel

Plot Date: 10-OCT-2022 9:43:19 AM
User: LDietzel
PlotScale: 1:1
DesignScript: Carollo_Std_Pen_v0905.pen
ColorTable: gshade.ctb
Model: Layout1
LAST SAVED BY: ldietzel

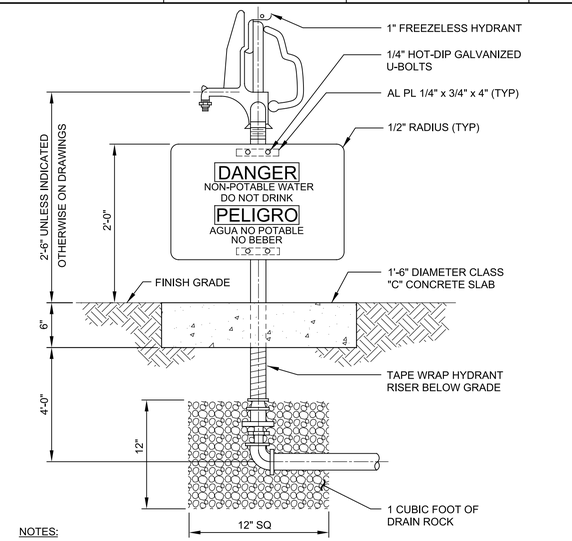

NOTES:

1. SIGN SHALL BE 3/8" THICK PLASTIC RESISTANT TO SUNLIGHT (ULTRAVIOLET) DETERIORATION.
2. SIGN SHALL BE 7" x 10" AND SHALL CONFORM TO THE SPECIFICATIONS.
3. SIGN AS SHOWN IS ROTATED 90° OFF TRUE POSITION. SIGN SHALL BE MOUNTED TO PERMIT EASY READING.
4. INSTALL HOSE RACK, M280 TYP, AT EACH HOSE VALVE.

M275 TYP — FREEZELESS YARD HYDRANT AND SIGN

N 08/01/05

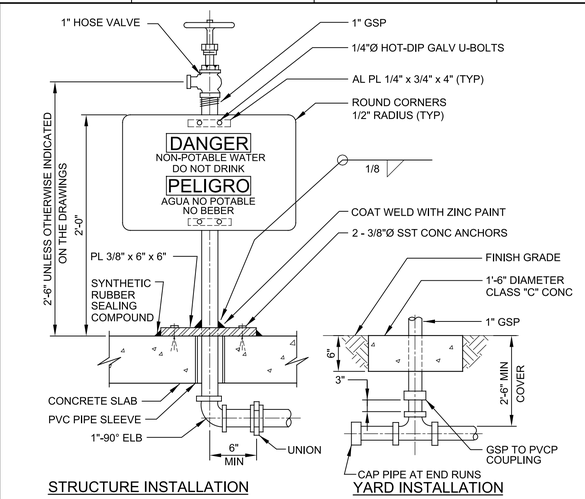

STRUCTURE INSTALLATION — YARD INSTALLATION

NOTES:

1. SIGN SHALL BE 3/8" THICK PLASTIC RESISTANT TO SUNLIGHT (ULTRAVIOLET) DETERIORATION.
2. SIGN SHALL BE 10" x 14" AND SHALL CONFORM TO THE SPECIFICATIONS.
3. SIGN AS SHOWN IS ROTATED 90° OFF TRUE POSITION. SIGN SHALL BE MOUNTED TO PERMIT EASY READING.
4. INSTALL HOSE RACK M280 TYP AT EACH HOSE VALVE.
5. HEAT TRACE EXPOSED PIPE.

M276 TYP — 1" HOSE VALVE AND SIGN

Ns 08/01/05

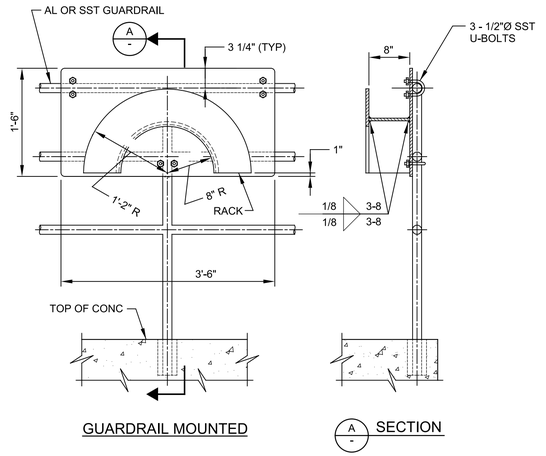

GUARDRAIL MOUNTED — A - SECTION

NOTES:

1. HOSE RACK SHALL BE FABRICATED FROM 3/16" ALUMINUM PLATE. ROUND ALL EDGES SMOOTH.
2. HOSE RACKS INSTALLED IN YARD LOCATIONS SHALL BE FREESTANDING. EMBED IN A 4'-6" LONG x 2'-0" WIDE x 8" DEEP CONCRETE PAD WITH #5@12" EW CENTERED.
3. WALL MOUNTED HOSE RACKS ON MASONRY WALL SHALL BE FASTEN TO GROUTED CELLS.

M280 TYP — HOSE RACK

S SHEET 1 OF 2 09/30/07

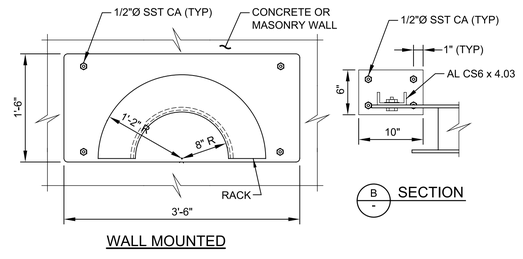

WALL MOUNTED

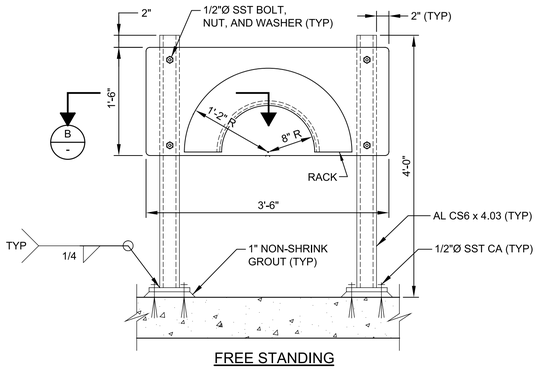

FREE STANDING

M280 TYP — HOSE RACK

S SHEET 2 OF 2 09/30/07

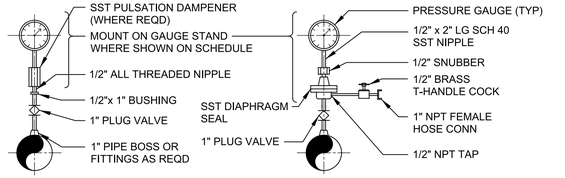

A - DETAIL - AIR AND GAS SERVICE ONLY — B - DETAIL - LIQUID SERVICE

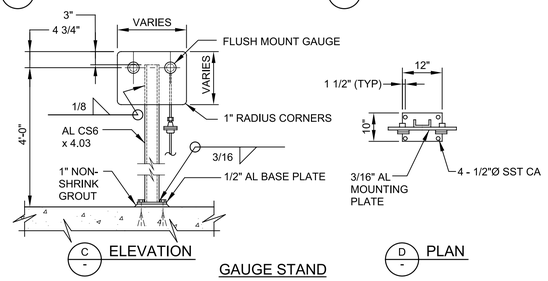

C - ELEVATION — D - PLAN

GAUGE STAND

NOTES:

1. ALL GAUGES SHALL BE DUAL SCALE. SCALES ON THE GAUGE FACE SHALL BE MARKED IN PSIG AND FEET OF WATER (FOR POSITIVE READINGS) OR INCHES OF MERCURY (FOR VACUUM READINGS).
2. MOUNTING PLATE DIMENSIONS VARY ACCORDING TO SIZE AND NUMBER OF GAUGES REQUIRED.
3. AT GAUGE STAND, DIAPHRAGM SHALL BE LOCATED BELOW THE MOUNTING PLATE. ONE INCH PIPE SHALL BE ROUTED BETWEEN DIAPHRAGM AND SERVICE PIPE PLUG VALVE. CROSSES WITH THREADED PLUGS SHALL BE USED IN LIEU OF 90° ELBOWS, WITH AT LEAST ONE UNION PER CROSS.
4. COAT ALUMINUM IN CONTACT WITH CONCRETE AS SPECIFIED.

M294 TYP — PRESSURE GAUGE DETAILS

S 08/01/05

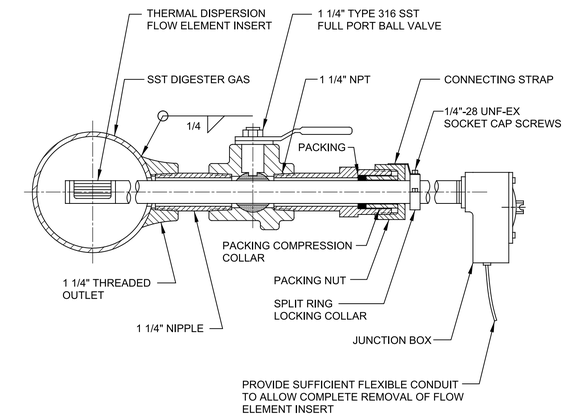

NOTES:

1. LENGTH OF PROBE TO BE DETERMINED BY MFG.
2. ALL SMALL DIAMETER PIPING SHALL BE SCH 40 TYPE 316L SST.

M295 TYP — THERMAL DISPERSION FLOWMETER

08/01/05

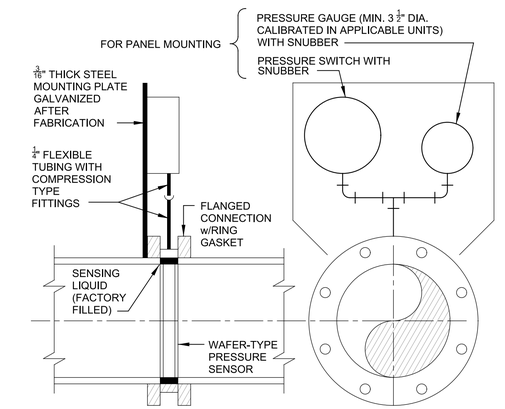

THIS CONFORMED DOCUMENT IS RELEASED FOR THE CONVENIENCE OF THE CONTRACTOR UNDER THE AUTHORITY OF:

DANNY M HURTADO, P.E.
TX LIC NO. 104266

11-01-22
DATE

SEE DISCLAIMER FOR LIMITATIONS OF USE.

CONTRACT DOCUMENTS DATED JUNE 10, 2022, AS PART OF THE BIDDING DOCUMENTS (DRAWINGS AND SPECIFICATIONS) AND SUBSEQUENTLY ISSUED ADDENDA HAVE BEEN MERGED INTO ONE CONFORMING SET OF DOCUMENTS FOR THE CONVENIENCE OF THE CONTRACTOR. IF INCONSISTENCIES OR AMBIGUITIES BETWEEN "CONFORMED" DOCUMENTS AND CONTRACT DOCUMENTS ARE FOUND, THE CONTRACT DOCUMENTS SHALL GOVERN.

M296 TYP — ANNULAR SEAL WITH PRESSURE GAUGE AND PRESSURE SWITCH MOUNTING DETAIL

J

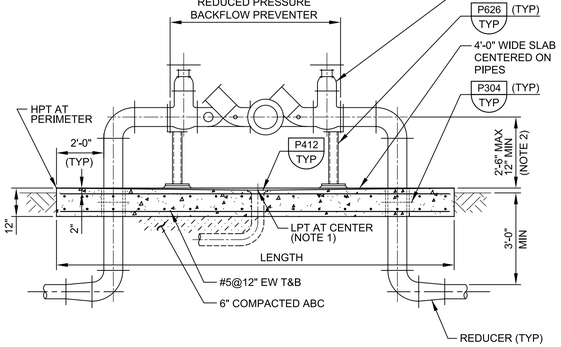

MK	SIZE

NOTES:

1. SLAB LOW POINT AT DRAIN (LPT) EQUALS HIGH POINT ELEVATION AT PERIMETER (HPT) MINUS 2" UNO.
2. IF LOCATED IN A CONTAINMENT AREA, THIS DIMENSION SHALL BE FROM THE TOP OF CONTAINMENT WALL.

M310 TYP — REDUCED PRESSURE DOUBLE BACKFLOW PREVENTER

08/21/19

REV	DATE	BY	DESCRIPTION
			CONFORMED DOCUMENTS

DESIGNED DMH
DRAWN SDW
CHECKED JPH
DATE NOVEMBER 2022

** ORIGINAL SEALED BY DANNY M. HURTADO 06-10-22 TX PE 104266 **

carollo® TBPELS No. F-882

CITY OF AUSTIN — FOUNDED 1839

CITY OF AUSTIN

CITY OF AUSTIN
WILD HORSE RANCH WWTP EXPANSION
TYPICAL DETAILS
MECHANICAL
TYPICAL DETAILS 3

VERIFY SCALES
BAR IS ONE INCH ON ORIGINAL DRAWING
0 1"
IF NOT ONE INCH ON THIS SHEET, ADJUST SCALES ACCORDINGLY

JOB NO. 10976A.00
DRAWING NO. 00TM03
SHEET NO. 58 OF 464

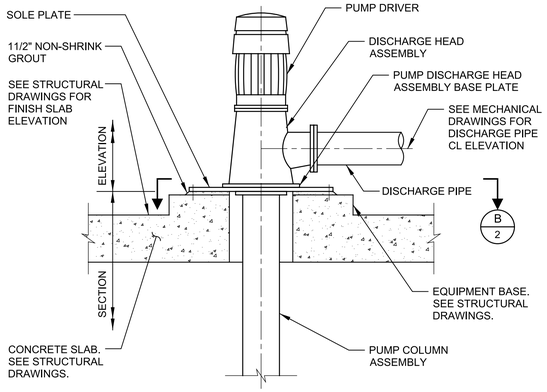

A - ELEVATION - SOLE PLATE

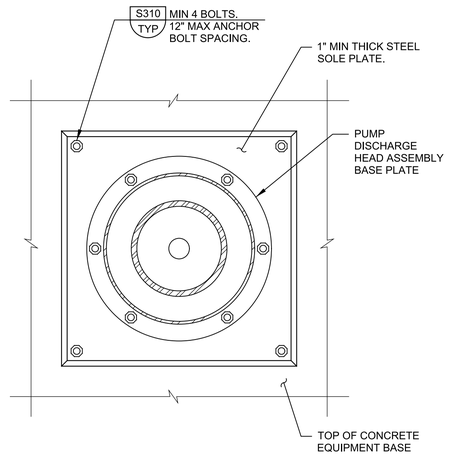

B 1 PLAN - SOLE PLATE

NOTES:

1. MACHINE TOP OF SOLE PLATE FOR UNIFORM CONTACT BETWEEN BOTTOM OF BASE PLATE FOR PUMP DISCHARGE HEAD ASSEMBLY AND TOP OF SOLE PLATE.
2. DRILL AND TAP SOLE PLATE FOR STUDS FOR FASTENING PUMP DISCHARGE HEAD ASSEMBLY TO SOLE PLATE.

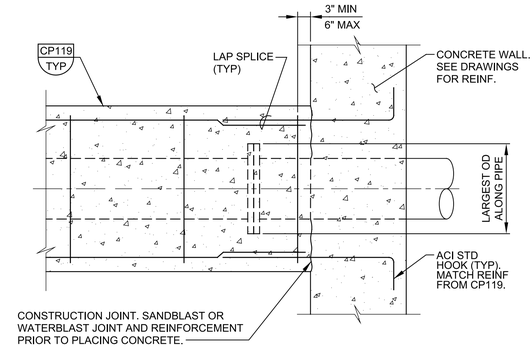

A - SECTION AT WALL

NOTE:

1. TYPE OF PIPE AND TYPE OF PIPE JOINT OR COUPLER AS INDICATED ON THE DRAWINGS.

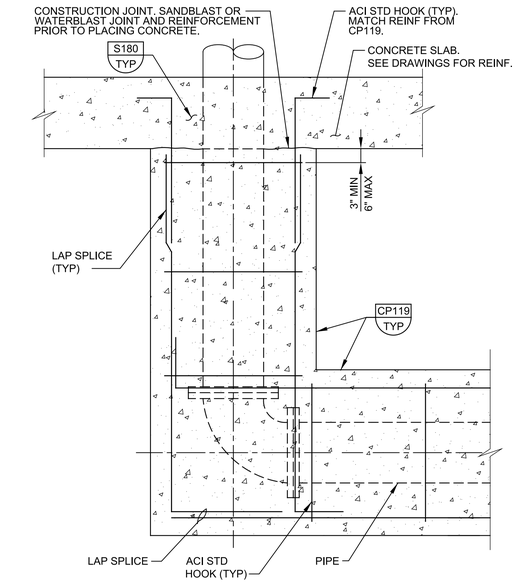

B - SECTION AT SLAB

M602 TYP N VERTICAL TURBINE PUMP MOUNTED ON SOLE PLATE — SHEET 1 OF 2 — 05/14/15

M602 TYP N VERTICAL TURBINE PUMP MOUNTED ON SOLE PLATE — SHEET 2 OF 2 — 05/14/15

MP140 TYP NS CONCRETE PIPE ENCASEMENT - CONNECTION AT STRUCTURE — SHEET 1 OF 2 — 12/20/19

MP140 TYP NS CONCRETE PIPE ENCASEMENT - CONNECTION AT STRUCTURE — SHEET 2 OF 2 — 12/20/19

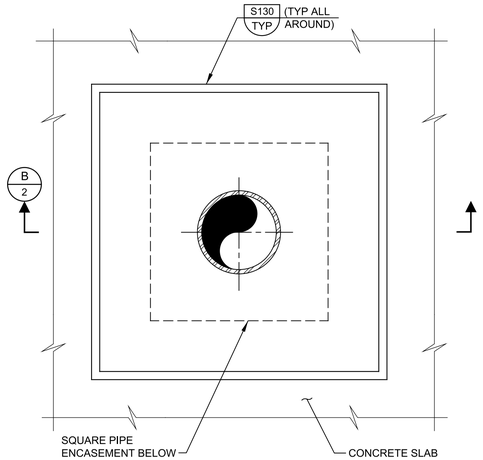

A - PLAN

NOTE:

1. TYPE OF PIPE AND TYPE OF PIPE JOINT AS INDICATED ON THE DRAWINGS.

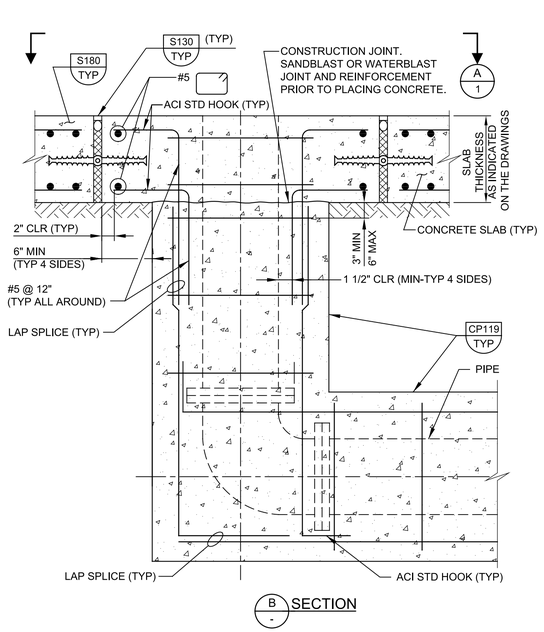

B - SECTION

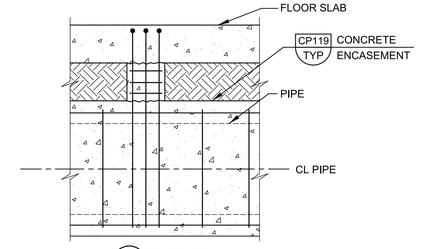

A - SECTION

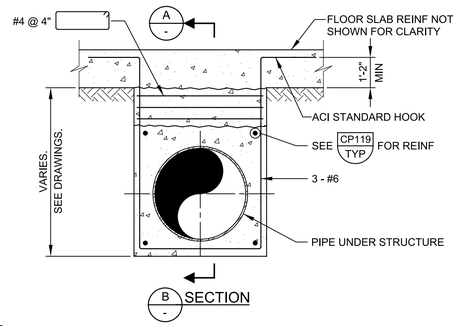

B - SECTION

NOTE:

1. MAXIMUM SPACING BETWEEN PIPE SUPPORTS UNDER SLABS IS 10'-0".

MP141 TYP N CONCRETE PIPE ENCASEMENT - SLAB PENETRATION - EXPANSION JOINT — SHEET 1 OF 2 — 12/20/19

MP141 TYP N CONCRETE PIPE ENCASEMENT - SLAB PENETRATION - EXPANSION JOINT — SHEET 2 OF 2 — 12/20/19

MP142 TYP N CONCRETE PIPE ENCASEMENT - SUPPORT UNDER SLABS AT PILE / PIER FOUNDATIONS — 12/20/19

THIS CONFORMED DOCUMENT IS RELEASED FOR THE CONVENIENCE OF THE CONTRACTOR UNDER THE AUTHORITY OF:

DANNY M HURTADO, P.E.
TX LIC NO. 104266

11-01-22
DATE

SEE DISCLAIMER FOR LIMITATIONS OF USE.

CONTRACT DOCUMENTS DATED JUNE 10, 2022, AS PART OF THE BIDDING DOCUMENTS (DRAWINGS AND SPECIFICATIONS) AND SUBSEQUENTLY ISSUED ADDENDA HAVE BEEN MERGED INTO ONE CONFORMING SET OF DOCUMENTS FOR THE CONVENIENCE OF THE CONTRACTOR. IF INCONSISTENCIES OR AMBIGUITIES BETWEEN "CONFORMED" DOCUMENTS AND CONTRACT DOCUMENTS ARE FOUND, THE CONTRACT DOCUMENTS SHALL GOVERN.

REV	DATE	BY	DESCRIPTION
			CONFORMED DOCUMENTS

DESIGNED DMH
DRAWN SDW
CHECKED JPH
DATE NOVEMBER 2022

** ORIGINAL SEALED BY DANNY M. HURTADO 06-10-22 TX PE 104266 **

carollo TBPELS No. F-882

CITY OF AUSTIN — FOUNDED 1839

CITY OF AUSTIN
WILD HORSE RANCH WWTP EXPANSION
TYPICAL DETAILS
MECHANICAL TYPICAL DETAILS 4

VERIFY SCALES
BAR IS ONE INCH ON ORIGINAL DRAWING
0 1"
IF NOT ONE INCH ON THIS SHEET, ADJUST SCALES ACCORDINGLY

JOB NO. 10976A.00
DRAWING NO. 00TM04
SHEET NO. 59 OF 464

Plot Date: 10-OCT-2022 9:44:44 AM
User: LDietzel
PlotScale: 1:1
DesignScript: Carollo_Std_Pen_v0905.pen
ColorTable: gshade.ctb
Model: Layout1
LAST SAVED BY: ldietzel

Plot Date: 10-OCT-2022 9:46:17 AM
User: LDietzel
Model: Layout1 ColorTable: gshade.ctb DesignScript: Carollo_Std_Pen_v0905.pen PlotScale: 1:1
LAST SAVED BY: ldietzel

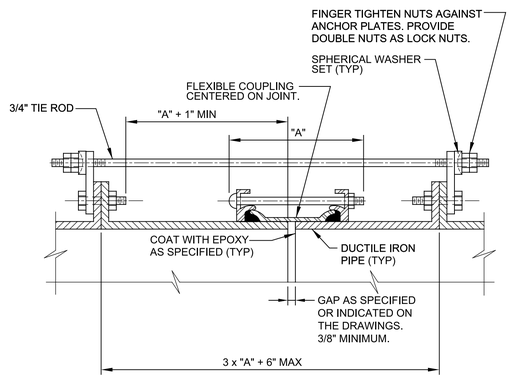

ROD SCHEDULE		
PIPE THRUST. SEE NOTE 2.	TYPE OF CONNECTION	NO. OF RODS
0-6,000#	I	2
6,001 - 12,000#	II	2
12,001 - 18,000#	II	3
18,001 - 24,000#	II	4
24,001 - 30,000#	II	5

P110 TYP — DIP FLEXIBLE COUPLING TIE DOWN

N SHEET 1 OF 2 04/21/15

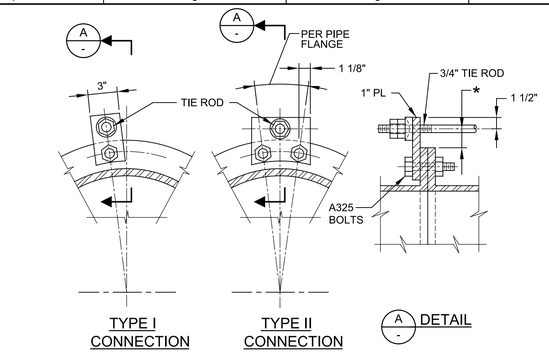

NOTES:

1. ALL EXPOSED FLEXIBLE COUPLINGS SHALL HAVE TIE RODS UNLESS SPECIFICALLY INDICATED OTHERWISE ON THE DRAWINGS.
2. PIPE THRUST SHALL BE BASED ON TEST PRESSURE.
3. PIPE THRUST = 0.7854 x D^2 x TEST PRESSURE, WHERE "D" IS PIPE OD.
4. MINIMUM TIE ROD YIELD = 48,000 PSI.
5. FOR THRUSTS GREATER THAN 30,000 POUNDS, ADD ONE 3/4 INCH DIAMETER TIE ROD FOR EVERY 6,000 POUNDS INCREASE IN THRUST.
6. ALL ROD CONNECTIONS SHALL BE TYPE II FOR THRUSTS GREATER THAN 30,000 POUNDS.
7. GRIND ALL CORNERS SMOOTH.
8. * = AS REQUIRED TO CLEAR FLEXIBLE COUPLING. 3/4" MINIMUM AND 1 1/2" MAXIMUM.

P110 TYP — DIP FLEXIBLE COUPLING TIE DOWN

N SHEET 2 OF 2 04/21/15

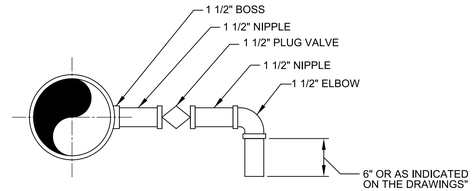

NOTE:

1. SAMPLE PIPE AND FITTINGS SHALL BE SCHEDULE 40 GSP.

P200 TYP — SAMPLE CONNECTION

03/01/10

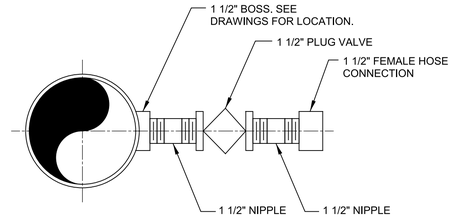

P202 TYP — FLUSHING CONNECTION

03/01/10

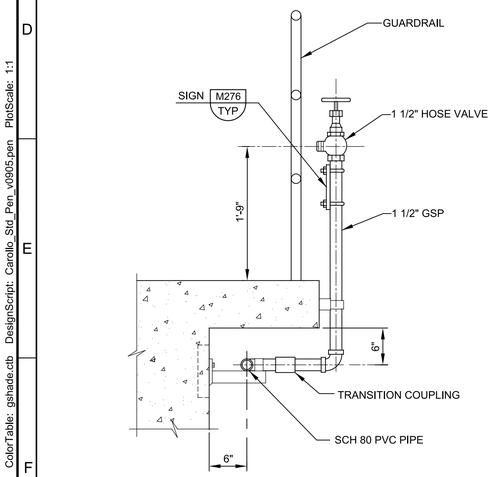

P220 TYP — HOSE VALVE RISER

03/01/10

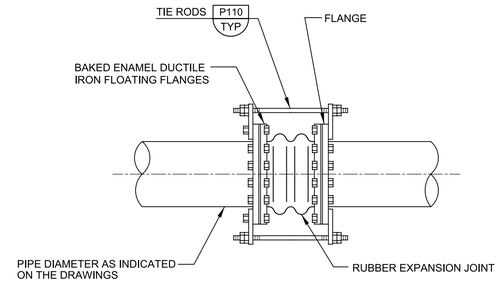

P232 TYP — RUBBER EXPANSION JOINTS FOR DIP

N 03/01/10

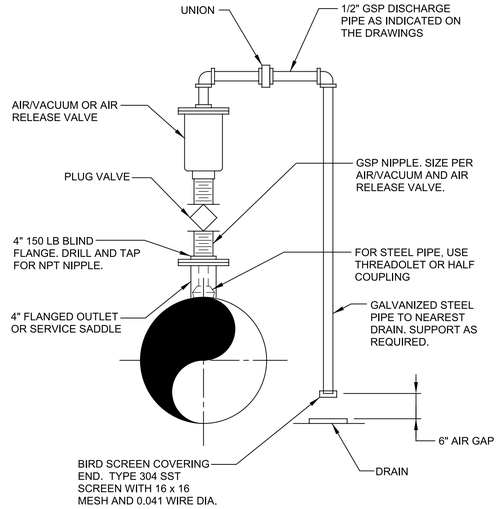

NOTES:

1. VALVE SIZE SHALL BE AS INDICATED ON THE DRAWINGS.
2. SERVICE TAP AND PLUG VALVE SHALL MATCH VALVE INLET SIZE.

P240 TYP — AIR VACUUM AND AIR RELEASE FOR 3" AND SMALLER VALVE ASSEMBLY

03/01/10

THIS CONFORMED DOCUMENT IS RELEASED FOR THE CONVENIENCE OF THE CONTRACTOR UNDER THE AUTHORITY OF:

11-01-22

DANNY M HURTADO, P.E. DATE
TX LIC NO. 104266

SEE DISCLAIMER FOR LIMITATIONS OF USE.

CONTRACT DOCUMENTS DATED JUNE 10, 2022, AS PART OF THE BIDDING DOCUMENTS (DRAWINGS AND SPECIFICATIONS) AND SUBSEQUENTLY ISSUED ADDENDA HAVE BEEN MERGED INTO ONE CONFORMING SET OF DOCUMENTS FOR THE CONVENIENCE OF THE CONTRACTOR. IF INCONSISTENCIES OR AMBIGUITIES BETWEEN "CONFORMED" DOCUMENTS AND CONTRACT DOCUMENTS ARE FOUND, THE CONTRACT DOCUMENTS SHALL GOVERN.

CONFORMED DOCUMENTS

REV	DATE	BY	DESCRIPTION

DESIGNED DMH
DRAWN SDW
CHECKED JPH
DATE NOVEMBER 2022

** ORIGINAL SEALED BY DANNY M. HURTADO 06-10-22 TX PE 104266 **

carollo® TBPELS No. F-882

CITY OF AUSTIN — FOUNDED 1839

CITY OF AUSTIN

CITY OF AUSTIN
WILD HORSE RANCH WWTP EXPANSION
TYPICAL DETAILS
PIPING TYPICAL DETAILS 1

VERIFY SCALES
BAR IS ONE INCH ON ORIGINAL DRAWING
0 1"
IF NOT ONE INCH ON THIS SHEET, ADJUST SCALES ACCORDINGLY

JOB NO. 10976A.00
DRAWING NO. 00TP01
SHEET NO. 60 OF 464

Plot Date: 10-OCT-2022 9:48:59 AM
User: LDietzel
PlotScale: 1:1
DesignScript: Carollo_Std_Pen_v0905.pen
ColorTable: gshade.ctb
Model: Layout1
LAST SAVED BY: ldietzel

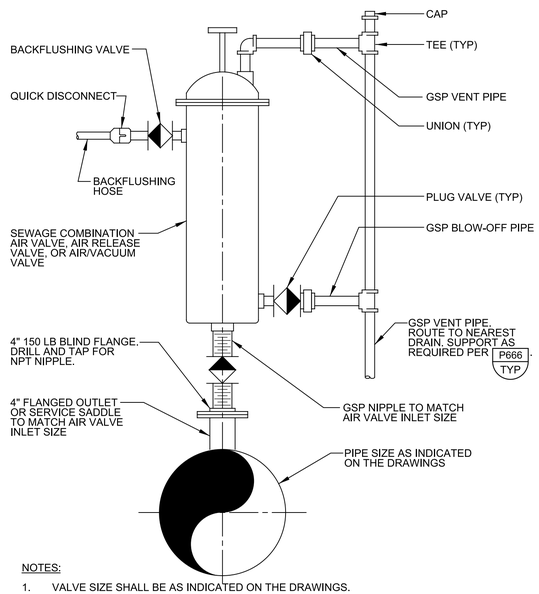

NOTES:

1. VALVE SIZE SHALL BE AS INDICATED ON THE DRAWINGS.
2. SERVICE TAP AND PLUG VALVE SHALL MATCH VALVE INLET SIZE.
3. GSP VENT AND BLOW OFF PIPING SHALL MATCH VALVE OUTLET SIZE.

P242 TYP — SEWAGE AIR VALVE FOR 3" AND SMALLER VALVE ASSEMBLY

N 03/01/10

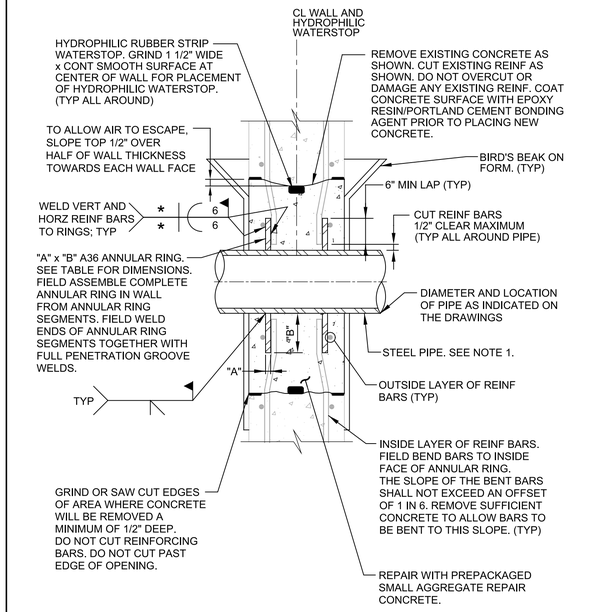

P301 TYP — PIPE PENETRATION THROUGH EXISTING TANK WALL

NS SHEET 1 OF 3 09/04/13

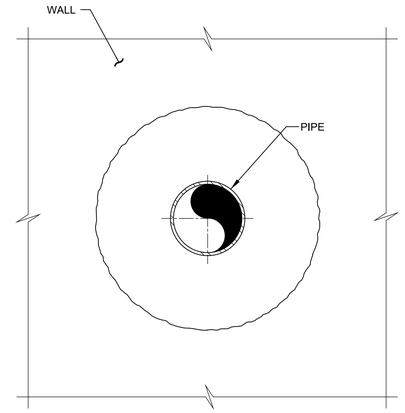

ELEVATION

P301 TYP — PIPE PENETRATION THROUGH EXISTING TANK WALL

N SHEET 2 OF 3 09/12/12

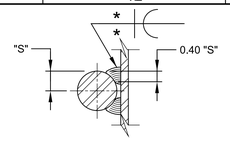

WELDED SPLICE BAR

LOCATION OF PIPE PENETRATION	THICKNESS OF ANNULAR RING "A"	WIDTH OF ANNULAR RING "B"

NOTES:

1. FIELD APPLY LINING AFTER WELDING IS COMPLETE.
2. CUT WALL REINFORCING THAT INTERFERS WITH PIPE. DO NOT CUT OR DAMAGE ANY OTHER BARS.
3. * = 0.40 "S" REINFORCING BAR RADIUS.
4. E 70 ELECTRODE FOR GRADE 40 REINF BARS; E 90 ELECTRODE FOR GRADE 60 REINF BARS.
5. SEE AWS D1.4 FOR WELDING PROCESS, PREHEAT REQUIREMENTS, AND OTHER DETAILS. SUBMIT WELDING PROCEDURE PER AWS.
6. USE FORMING WITH "BIRDS PEAK" ON BOTH WALL FACES FOR ACCESS FOR VIBRATOR AND TO ALLOW CONCRETE TO BE PLACED UNDER SLIGHT PRESSURE. AFTER FORMS ARE REMOVED, REMOVE PROJECTING CONCRETE AND FINISH TO MATCH FINISH OF EXISTING WALL.
7. WATER CURE REPAIRED CONCRETE FOR MINIMUM OF 7 DAYS. KEEP REPAIRED AREA CONTINUOUSLY WET.

P301 TYP — PIPE PENETRATION THROUGH EXISTING TANK WALL

NS SHEET 3 OF 3 09/04/13

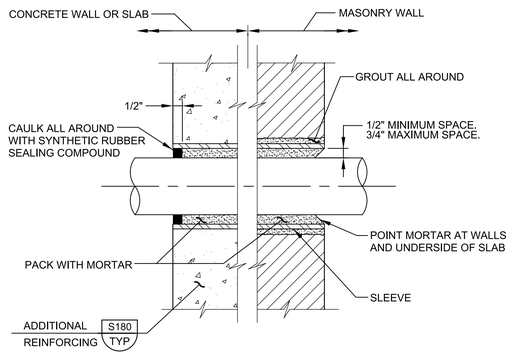

NOTES:

1. 6"Ø DIAMETER SLEEVES AND SMALLER SHALL BE SCHEDULE 40 STEEL PIPE OR SCHEDULE 80 PVC PIPE.
2. SLEEVES LARGER THAN 6"Ø SHALL BE 1/4" THICK STEEL PIPE.
3. STEEL SLEEVE SHALL BE HOT-DIP GALVANIZED AFTER FABRICATION.
4. SLEEVES FOR ELECTRICAL CONDUIT SHALL BE SCHEDULE 80 PVC.

P302 TYP — SLEEVE INSTALLATION THROUGH DRY WALLS AND FLOOR SLABS

NS 08/01/05

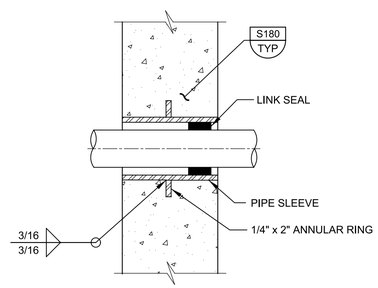

NOTES:

1. 6"Ø SLEEVES AND SMALLER SHALL BE SCH 40 STEEL PIPE.
2. SLEEVES LARGER THAN 6"Ø SHALL BE 1/4" THICK STEEL PIPE.
3. IN WALLS THICKER THAN 12", LINK SEAL SHALL BE INSTALLED AT BOTH ENDS OF WALL SLEEVE. SLEEVE DIAMETER SHALL BE PER LINK SEAL MANUFACTURER'S RECOMMENDATION.
4. SLEEVE SHALL BE HOT-DIP GALVANIZED AFTER FABRICATION.

P304 TYP — SLEEVE INSTALLATION THROUGH WALLS AND FLOOR SLABS

NS 08/01/05

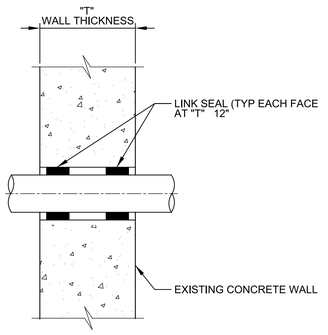

NOTES:

1. IN WALLS THICKER THAN 12", LINK SEAL SHALL BE INSTALLED AT BOTH ENDS OF WALL SLEEVE. SLEEVE DIAMETER SHALL BE PER LINK SEAL MANUFACTURER'S RECOMMENDATION.
2. MAX CORE DIAMETER = 18" INSIDE.
3. LINK SEAL HARDWARE SHALL BE 316 SST CONSTRUCTION.

P305 TYP — PIPE INSTALLATION THROUGH EXISTING WALLS

J 05/16/18

THIS CONFORMED DOCUMENT IS RELEASED FOR THE CONVENIENCE OF THE CONTRACTOR UNDER THE AUTHORITY OF:

11-01-22

DANNY M HURTADO, P.E. DATE
TX LIC NO. 104266

SEE DISCLAIMER FOR LIMITATIONS OF USE.

CONTRACT DOCUMENTS DATED JUNE 10, 2022, AS PART OF THE BIDDING DOCUMENTS (DRAWINGS AND SPECIFICATIONS) AND SUBSEQUENTLY ISSUED ADDENDA HAVE BEEN MERGED INTO ONE CONFORMING SET OF DOCUMENTS FOR THE CONVENIENCE OF THE CONTRACTOR. IF INCONSISTENCIES OR AMBIGUITIES BETWEEN "CONFORMED" DOCUMENTS AND CONTRACT DOCUMENTS ARE FOUND, THE CONTRACT DOCUMENTS SHALL GOVERN.

REV	DATE	BY	DESCRIPTION
			CONFORMED DOCUMENTS

DESIGNED DMH
DRAWN SDW
CHECKED JPH
DATE NOVEMBER 2022

** ORIGINAL SEALED BY DANNY M. HURTADO 06-10-22 TX PE 104266 **

carollo® TBPELS No. F-882

CITY OF AUSTIN — FOUNDED 1839

CITY OF AUSTIN

CITY OF AUSTIN
WILD HORSE RANCH WWTP EXPANSION
TYPICAL DETAILS
PIPING TYPICAL DETAILS 2

VERIFY SCALES
BAR IS ONE INCH ON ORIGINAL DRAWING
0 1"
IF NOT ONE INCH ON THIS SHEET, ADJUST SCALES ACCORDINGLY

JOB NO. 10976A.00
DRAWING NO. 00TP02
SHEET NO. 61 OF 464

PROJECT NO. 10976A10 FILE NAME: 10976A1000TP002.dgn

Plot Date: 10-OCT-2022 9:52:19 AM
User: LDietzel
PlotScale: 1:1
DesignScript: Carollo_Std_Pen_v0905.pen
ColorTable: gshade.ctb
Model: Layout1
LAST SAVED BY: ldietzel

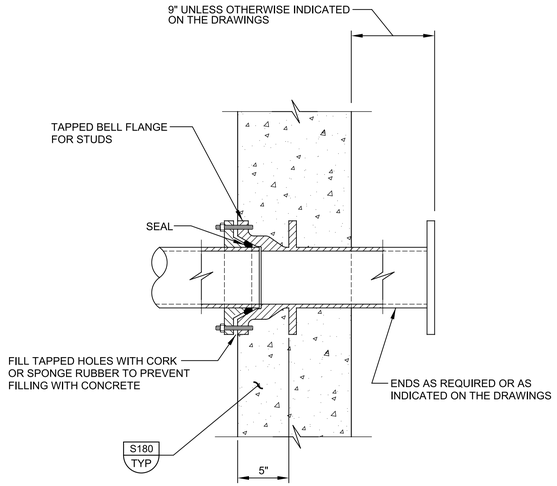

P306 TYP N — DIP WALL PIPE

07/31/08

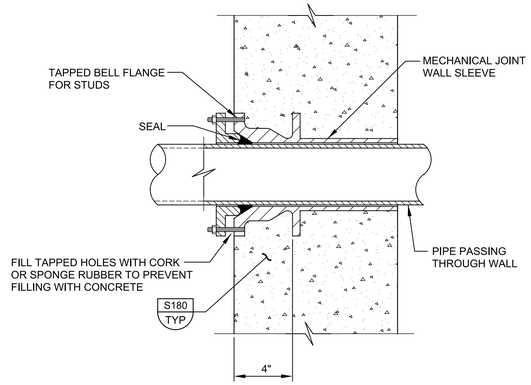

P308 TYP N — DIP PIPE SLEEVE

07/31/08

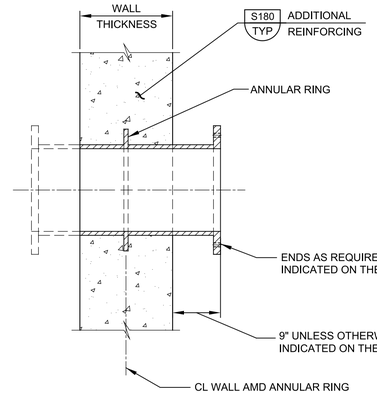

P312 TYP N — WALL THIMBLE FOR DIP

01/30/2015

THIS CONFORMED DOCUMENT IS RELEASED FOR THE CONVENIENCE OF THE CONTRACTOR UNDER THE AUTHORITY OF:

11-01-22

DANNY M HURTADO, P.E. DATE
TX LIC NO. 104266

SEE DISCLAIMER FOR LIMITATIONS OF USE.

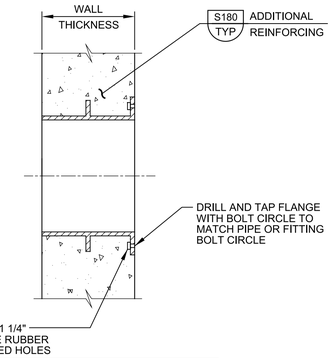

P314 TYP N — WALL THIMBLE WITH TAPPED FLANGE FOR DIP

08/01/05

CONTRACT DOCUMENTS DATED JUNE 10, 2022, AS PART OF THE BIDDING DOCUMENTS (DRAWINGS AND SPECIFICATIONS) AND SUBSEQUENTLY ISSUED ADDENDA HAVE BEEN MERGED INTO ONE CONFORMING SET OF DOCUMENTS FOR THE CONVENIENCE OF THE CONTRACTOR. IF INCONSISTENCIES OR AMBIGUITIES BETWEEN "CONFORMED" DOCUMENTS AND CONTRACT DOCUMENTS ARE FOUND, THE CONTRACT DOCUMENTS SHALL GOVERN.

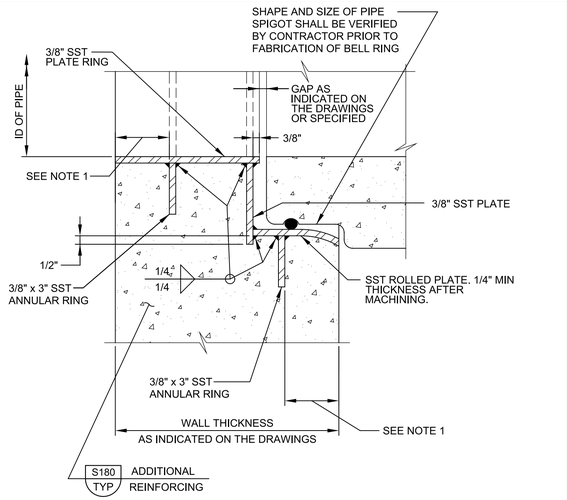

NOTES:

1. REINFORCING BAR COVER PLUS DIAMETER OF OUTSIDE BARS.
2. INSTALL ANNULAR RINGS PARALLEL TO FACE OF WALL AFTER ACCOUNTING FOR SLOPE OF PIPE. INSTALL BELL RING INSERT PERPENDICULAR TO CENTERLINE OF PIPE.
3. GRIND SMOOTH ALL METAL EDGES AND ALL SURFACES IN PIPE SEATING AREA.
4. BELL RING SHALL HAVE SPIDER BRACING INSTALLED AT POINT OF MANUFACTURE.

P324 TYP N — SST BELL RING INSERT FOR CONCRETE PIPE 48"Ø AND SMALLER

03/26/15

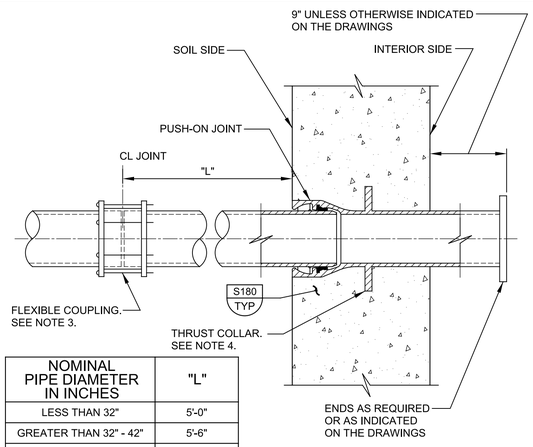

NOMINAL PIPE DIAMETER IN INCHES	"L"
LESS THAN 32"	5'-0"
GREATER THAN 32" - 42"	5'-6"
GREATER THAN 42" - 54"	6'-6"
GREATER THAN 54" - 64"	7'-9"

NOTES:

1. FLEXIBLE CONNECTION IS DESIGNED TO ACCOMMODATE SETTLEMENT AND EARTHQUAKE MOVEMENT.
2. PIPES SHALL BE INSTALLED STRAIGHT WITHOUT HORIZONTAL OR VERTICAL OFFSET. DO NOT USE JOINT ANGULAR DEFLECTION TO MAKE UP FOR MISALIGNED PIPE.
3. IN LIEU OF FLEXIBLE COUPLING, A MECHANICAL OR PUSH ON JOINT MAY BE UTILIZED.
4. WALL PIPE WITH WEEP RING (THRUST COLLAR) SHALL BE CAPABLE OF RESISTING THRUST.

P340 TYP N — UNRESTRAINED DIP FLEXIBLE CONNECTION AT WALL PENETRATION

08/01/05

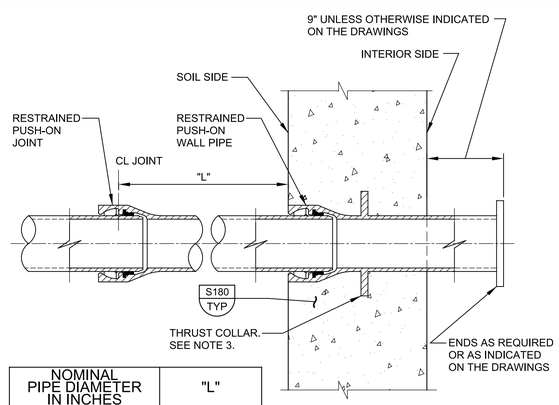

NOMINAL PIPE DIAMETER IN INCHES	"L"
LESS THAN 12"	5'-0"
GREATER THAN 12"- 18"	6'-6"
GREATER THAN 18"- 24"	7'-9"
GREATER THAN 24"- 36"	12'-9"
GREATER THAN 36"	STANDARD PIPE LENGTH

NOTES:

1. FLEXIBLE CONNECTION IS DESIGNED TO ACCOMMODATE SETTLEMENT AND EARTHQUAKE MOVEMENT.
2. PIPES SHALL BE INSTALLED STRAIGHT WITHOUT HORIZONTAL OR VERTICAL OFFSET. DO NOT USE JOINT ANGULAR DEFLECTION TO MAKE UP FOR MISALIGNED PIPE.
3. WALL PIPE WITH WEEP RING (THRUST COLLAR) SHALL BE CAPABLE OF RESISTING THRUST.

P342 TYP N — RESTRAINED DIP FLEXIBLE CONNECTION AT WALL PENETRATION

07/31/08

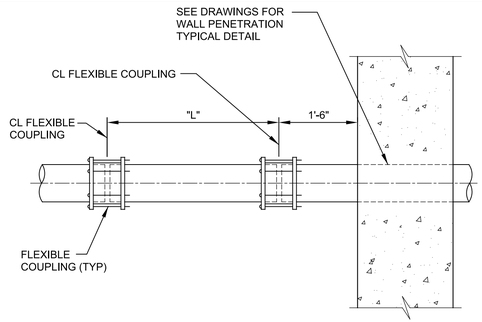

NOMINAL PIPE DIAMETER IN INCHES	"L"
LESS THAN 31"	5'-0"
GREATER THAN 31"- 42"	5'-6"
GREATER THAN 42"- 54"	6'-6"
GREATER THAN 54"- 66"	7'-9"
GREATER THAN 66"- 100"	12'-9"

NOTE:

1. PIPES SHALL BE INSTALLED STRAIGHT WITHOUT HORIZONTAL OR VERTICAL OFFSET. DO NOT USE JOINT ANGULAR DEFLECTION TO MAKE UP FOR MISALIGNED PIPE.

P344 TYP N — UNRESTRAINED STEEL PIPE FLEXIBLE CONNECTION AT WALL PENETRATION

08/01/05

REV	DATE	BY	DESCRIPTION

CONFORMED DOCUMENTS

DESIGNED DMH
DRAWN SDW
CHECKED JPH
DATE NOVEMBER 2022

** ORIGINAL SEALED BY DANNY M. HURTADO 06-10-22 TX PE 104266 **

carollo® TBPELS No. F-882

CITY OF AUSTIN

CITY OF AUSTIN
WILD HORSE RANCH WWTP EXPANSION
TYPICAL DETAILS
PIPING
TYPICAL DETAILS 3

VERIFY SCALES
BAR IS ONE INCH ON ORIGINAL DRAWING
0 1"
IF NOT ONE INCH ON THIS SHEET, ADJUST SCALES ACCORDINGLY

JOB NO. 10976A.00
DRAWING NO. 00TP03
SHEET NO. 62 OF 464

PROJECT NO. 10976A10 FILE NAME: 10976A1000TP003.dgn

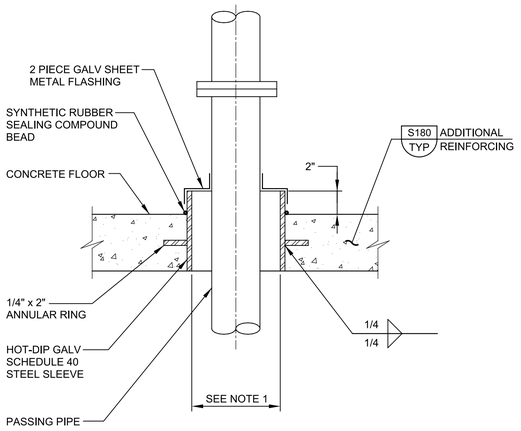

NOTE:

1. INSIDE DIAMETER OF SLEEVE SHALL ACCOMMODATE COUPLING ON SHAFTING FOR PUMPS.

P404 TYP — FLOOR SLEEVE CLOSURE SEAL

07/31/08

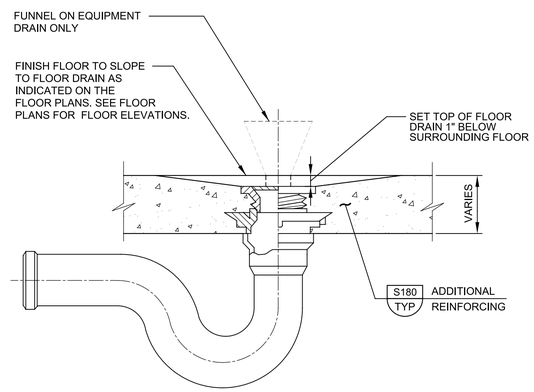

THIS CONFORMED DOCUMENT IS RELEASED FOR THE CONVENIENCE OF THE CONTRACTOR UNDER THE AUTHORITY OF:

DANNY M HURTADO, P.E.
TX LIC NO. 104266

11-01-22
DATE

SEE DISCLAIMER FOR LIMITATIONS OF USE.

NOTE:

1. PROVIDE 12" RADIUS SLOPE TO EQUIPMENT DRAINS WHERE FLOOR DOES NOT SLOPE TO DRAIN.

P410 TYP S — FLOOR DRAIN OR EQUIPMENT DRAIN WITH TRAP

08/01/05

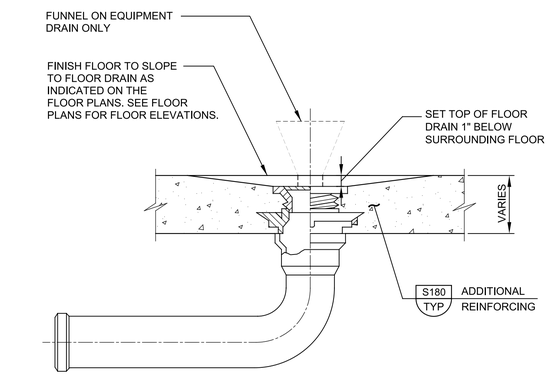

CONTRACT DOCUMENTS DATED JUNE 10, 2022, AS PART OF THE BIDDING DOCUMENTS (DRAWINGS AND SPECIFICATIONS) AND SUBSEQUENTLY ISSUED ADDENDA HAVE BEEN MERGED INTO ONE CONFORMING SET OF DOCUMENTS FOR THE CONVENIENCE OF THE CONTRACTOR. IF INCONSISTENCIES OR AMBIGUITIES BETWEEN "CONFORMED" DOCUMENTS AND CONTRACT DOCUMENTS ARE FOUND, THE CONTRACT DOCUMENTS SHALL GOVERN.

NOTE:

1. PROVIDE 12" RADIUS SLOPE TO EQUIPMENT DRAINS WHERE FLOOR DOES NOT SLOPE TO DRAIN.

P412 TYP S — FLOOR DRAIN OR EQUIPMENT DRAIN WITHOUT TRAP

08/01/05

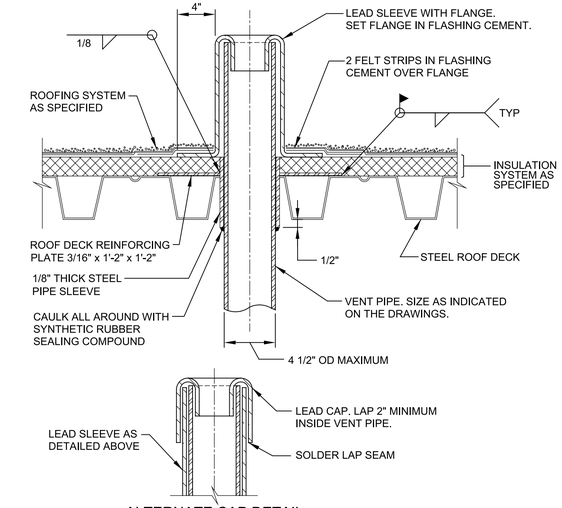

ALTERNATE CAP DETAIL

NOTES:

1. LOCATE PIPE BETWEEN WEBS ONLY. FOR INSTALLATIONS WHERE WEB IS CUT, THE CONSTRUCTION SHALL BE PER S520 TYP WITH RAIN SKIRT.
2. SLEEVE LENGTH VARIES WITH INSULATION SYSTEM THICKNESS.
3. SLEEVE ID SHALL BE MINIMUM OF PIPE OD + 1/4".

P508 TYP N — VENT THROUGH STEEL ROOF DECK

12/06/05

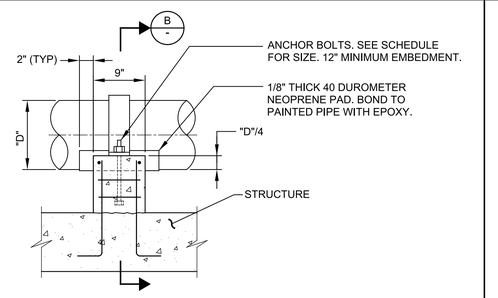

A - SECTION-SUPPORT AT STRUCTURE

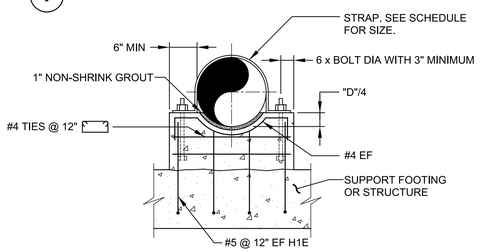

B - SECTION

P602 TYP N — CONCRETE PIPE SUPPORT

SHEET 1 OF 2 07/19/16

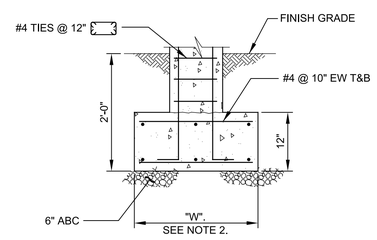

C - SECTION-ISOLATED SUPPORT WITH FOOTING

SCHEDULE		
PIPE SIZE	STRAP SIZE	ANCHOR BOLT DIA
8" - 12"	FB 1/4" x 4"	1/2"
14" - 24"	FB 5/16" x 4"	5/8"
26" - 36"	FB 3/8" x 4"	3/4"

NOTES:

1. IF SUPPORT IS SUBMERGED OR LOCATED BELOW THE TOP OF WALL IN WATER BEARING STRUCTURE, MATERIAL FOR ANCHOR BOLTS AND STRAP SHALL BE STAINLESS STEEL. IN ALL OTHER AREAS, THE MATERIAL FOR ANCHOR BOLTS AND STRAP SHALL BE HOT-DIP GALVANIZED STEEL UNLESS OTHERWISE INDICATED ON THE DRAWINGS.
2. THE WIDTH OF THE FOOTING "W" = 2'-6". THE LENGTH OF THE FOOTING = "D" + 2'-0".

P602 TYP N — CONCRETE PIPE SUPPORT

SHEET 2 OF 2 11/30/08

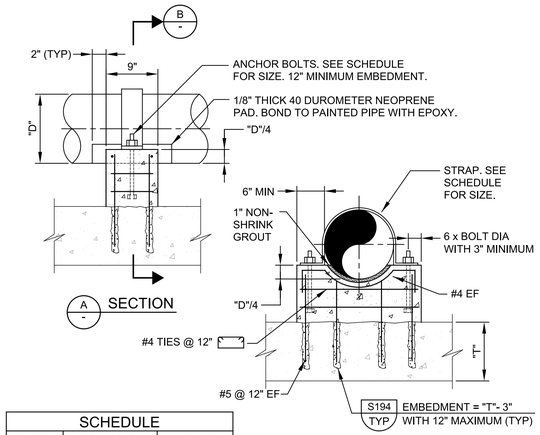

A - SECTION

B - SECTION

SCHEDULE		
PIPE SIZE	STRAP SIZE	ANCHOR BOLT DIA
8" - 12"	FB 1/4" x 4"	1/2"
14" - 24"	FB 5/16" x 4"	5/8"
26" - 36"	FB 3/8" x 4"	3/4"

NOTES:

1. IF SUPPORT IS SUBMERGED OR LOCATED BELOW THE TOP OF WALL IN WATER BEARING STRUCTURE, MATERIAL FOR ANCHOR BOLTS AND STRAP SHALL BE STAINLESS STEEL. IN ALL OTHER AREAS, THE MATERIAL FOR ANCHOR BOLTS AND STRAP SHALL BE HOT-DIP GALVANIZED STEEL UNLESS OTHERWISE INDICATED ON THE DRAWINGS.
2. MIN "T" = 12".

P604 TYP N — CONCRETE PIPE SUPPORT AT EXISTING STRUCTURE

07/31/08

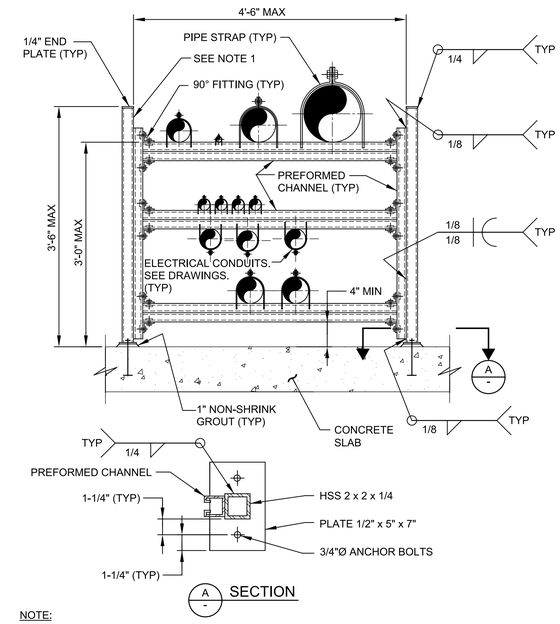

A - SECTION

NOTE:

1. HOT-DIP GALVANIZE SUPPORT COLUMN ASSEMBLIES AFTER FABRICATION.

P610 TYP N — CANTILEVER PIPE AND CONDUIT SUPPORT RACK

06/25/13

REV	DATE	BY	DESCRIPTION
			CONFORMED DOCUMENTS

DESIGNED DMH
DRAWN SDW
CHECKED JPH
DATE NOVEMBER 2022

** ORIGINAL SEALED BY DANNY M. HURTADO 06-10-22 TX PE 104266 **

carollo® TBPELS No. F-882

CITY OF AUSTIN — FOUNDED 1839

CITY OF AUSTIN

CITY OF AUSTIN
WILD HORSE RANCH WWTP EXPANSION
TYPICAL DETAILS
PIPING
TYPICAL DETAILS 4

VERIFY SCALES
BAR IS ONE INCH ON ORIGINAL DRAWING
0 1"
IF NOT ONE INCH ON THIS SHEET, ADJUST SCALES ACCORDINGLY

JOB NO. 10976A.00
DRAWING NO. 00TP04
SHEET NO. 63 OF 464

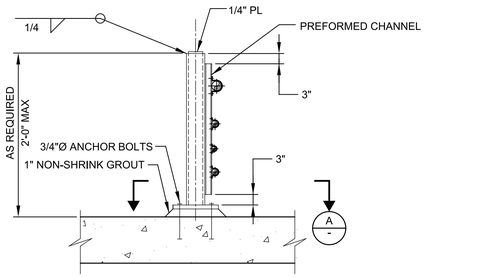

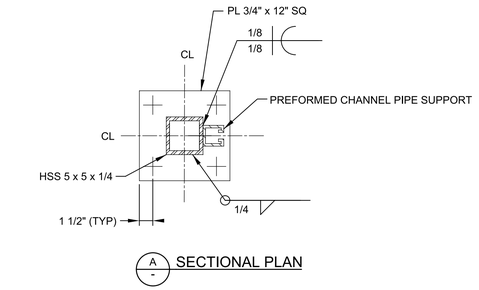

P615 TYP — PIPE SUPPORT POST WITH PREFORMED CHANNEL

N 08/22/08

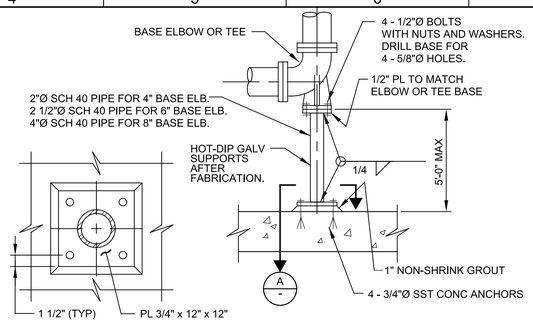

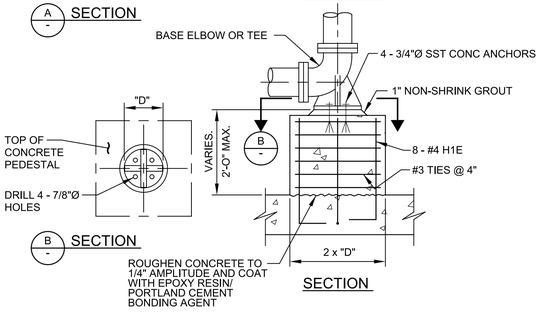

P620 TYP — ELBOW OR TEE PIPE SUPPORT

NS 03/06/13

ADJUSTABLE PIPE SADDLE SUPPORT SCHEDULE (INCHES)					
SIZE OF SUPPORTED PIPE **	PIPE SIZE "A"	PIPE SIZE "B"	"C"	"D" MINIMUM	"D" MAXIMUM
2 1/2 *	2 1/2	1 1/2	12	8	13
3	2 1/2	1 1/2	12	8 1/2	13 1/2
3 1/2	2 1/2	1 1/2	12	8 1/2	13 1/2
4	3	2 1/2	12	9 1/2	14
6	3	2 1/2	12	10 1/2	15 1/2
8	3	2 1/2	12	11 1/2	16 1/2
10	3	2 1/2	12	13 1/2	18 1/2
12	3	2 1/2	12	15	19 1/2
14	4	3	12	16 1/2	20 1/2
16	4	3	12	17 1/2	22 1/2
18	6	3 1/2	14	19 1/2	24
20	6	3 1/2	14	21	25 1/2
24	6	4	14	23 1/2	28 1/2
30	6	4	14	27	31 1/2
32	6	4	14	28 1/2	32 1/2
36	6	4	14	30 1/2	34 1/2

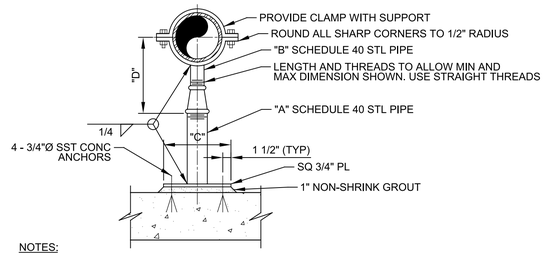

NOTES:

1. HOT-DIP GALVANIZED SUPPORT AFTER FABRICATION.
2. * = USE 2 1/2" SUPPORTS FOR PIPES LESS THEN 2 1/2"Ø.
3. ** = NOMINAL PIPE SIZE.

P624 TYP — ADJUSTABLE PIPE SUPPORT

NS 09/04/13

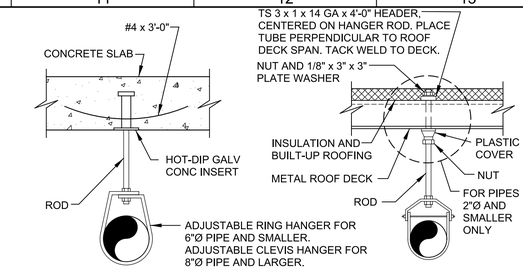

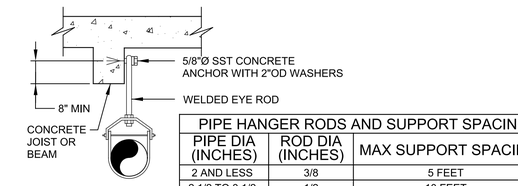

PIPE HANGER RODS AND SUPPORT SPACING		
PIPE DIA (INCHES)	ROD DIA (INCHES)	MAX SUPPORT SPACING
2 AND LESS	3/8	5 FEET
2 1/2 TO 3 1/2	1/2	10 FEET
4 TO 5	5/8	10 FEET
6	3/4	10 FEET
8	7/8	10 FEET
10	7/8	10 FEET
12	7/8	10 FEET

NOTES:

1. ISOLATE ALL COPPER PIPE FROM SUPPORT WITH PVC TAPE.
2. ALL MATERIALS SHALL BE HOT-DIP GALVANIZED.
3. PROVIDE ADDITIONAL HANGER AT EACH SIDE OF ALL VALVES 4 INCHES AND LARGER.

P630 TYP — PIPE HANGER

N SHEET 1 OF 2 07/31/08

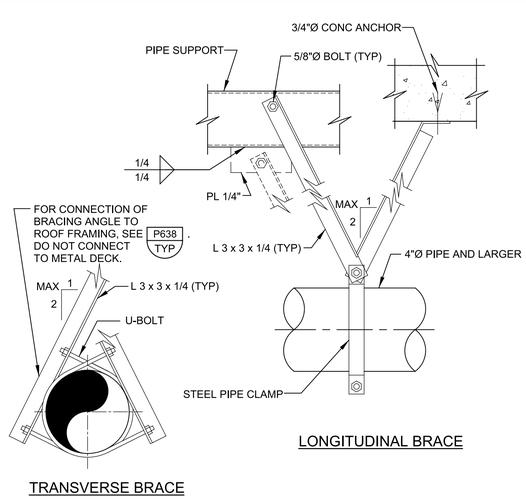

NOTES:

1. MAXIMUM LONGITUDINAL BRACE SPACING = 20'-0".
2. MAXIMUM TRANSVERSE BRACE SPACING = 20'-0".
3. DO NOT CONNECT BRACE TO BOTTOM OF ROOF BEAM OR C8 PIPE SUPPORT, EXCEPT AS SHOWN IN P638 TYP.
4. USE LONGITUDINAL AND TRANSVERSE BRACES FOR PIPES 4" AND LARGER.

P630 TYP — PIPE HANGER

N SHEET 2 OF 2 07/31/08

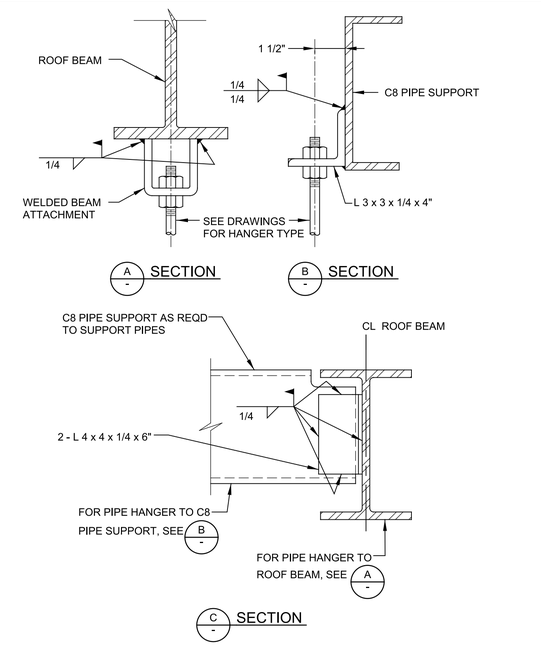

P636 TYP — PIPE HANGER SUPPORT

08/01/05

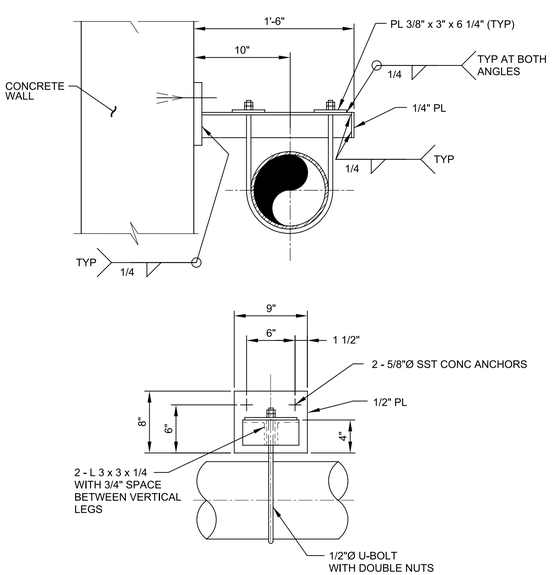

NOTE:

1. IF SUPPORT IS SUBMERGED OR LOCATED BELOW THE TOP OF WALL IN WATER BEARING STRUCTURE, ALL MATERIAL FOR SUPPORT SHALL BE STAINLESS STEEL. IN ALL OTHER AREAS, ALL MATERIAL FOR SUPPORT SHALL BE HOT-DIP GALVANIZED STEEL UNLESS OTHERWISE INDICATED ON DRAWINGS. HOT-DIP GALVANIZE AFTER FABRICATION.

P650 TYP — PIPE SUPPORT - WALL BRACKET ABOVE PIPE

N 04/22/13

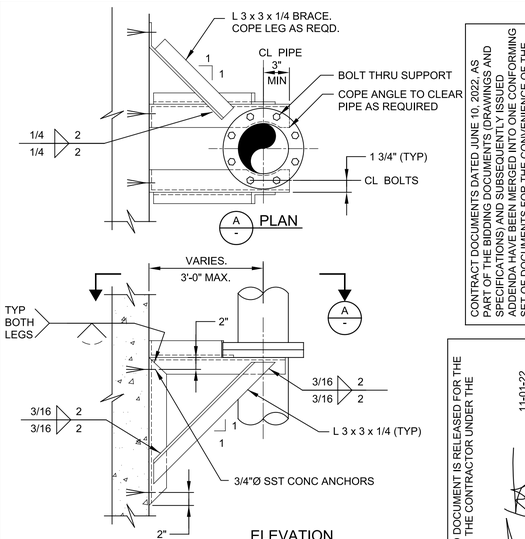

CONTRACT DOCUMENTS DATED JUNE 10, 2022, AS PART OF THE BIDDING DOCUMENTS (DRAWINGS AND SPECIFICATIONS) AND SUBSEQUENTLY ISSUED ADDENDA HAVE BEEN MERGED INTO ONE CONFORMING SET OF CONTRACT DOCUMENTS. IN THE EVENT THE CONTRACTOR, IF INCONSISTENCIES OR AMBIGUITIES BETWEEN "CONFORMED" DOCUMENTS AND CONTRACT DOCUMENTS ARE FOUND, THE CONTRACT DOCUMENTS SHALL GOVERN.

THIS CONFORMED DOCUMENT IS RELEASED FOR THE PURPOSES OF THE CONTRACTOR UNDER THE AUTHORITY OF:
DANNY M. HURTADO, P.E.
TX LIC NO. 104266
11-01-22
DATE
SEE DISCLAIMER FOR LIMITATIONS OF USE.

NOTE:

1. HOT-DIP GALVANIZE SUPPORT AFTER FABRICATION.

P656 TYP — VERTICAL PIPE SUPPORT - WALL BRACKET INSIDE

N 07/31/08

REV	DATE	BY	DESCRIPTION
			CONFORMED DOCUMENTS

DESIGNED DMH
DRAWN SDW
CHECKED JPH
DATE NOVEMBER 2022

** ORIGINAL SEALED BY DANNY M. HURTADO 06-10-22 TX PE 104266 **

carollo® TBPELS No. F-882

CITY OF AUSTIN — FOUNDED 1839

CITY OF AUSTIN

CITY OF AUSTIN
WILD HORSE RANCH WWTP EXPANSION
TYPICAL DETAILS
PIPING
TYPICAL DETAILS 5

VERIFY SCALES
BAR IS ONE INCH ON ORIGINAL DRAWING
0 1"
IF NOT ONE INCH ON THIS SHEET, ADJUST SCALES ACCORDINGLY

JOB NO. 10976A.00
DRAWING NO. 00TP05
SHEET NO. 64 OF 464

Plot Date: 10-OCT-2022 10:05:31 AM
User: LDietzel
PlotScale: 1:1
DesignScript: Carollo_Std_Pen_v0905.pen
ColorTable: gshade.ctb
Model: Layout1
LAST SAVED BY: ldietzel

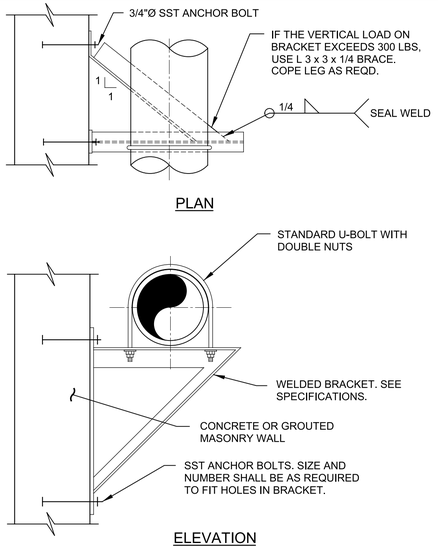

NOTES:

1. MAXIMUM ALLOWABLE VERTICAL LOAD IS THE SMALLER OF 1500 POUNDS AND THE MANUFACTURERS MAXIMUM ALLOWABLE BRACKET LOAD.
2. HOT-DIP GALVANIZE SUPPORT AFTER FABRICATION.
3. ISOLATE ALL COPPER PIPE WITH PVC TAPE.

P658 TYP — PIPE SUPPORT - WALL BRACKET BELOW

N — 04/10/19

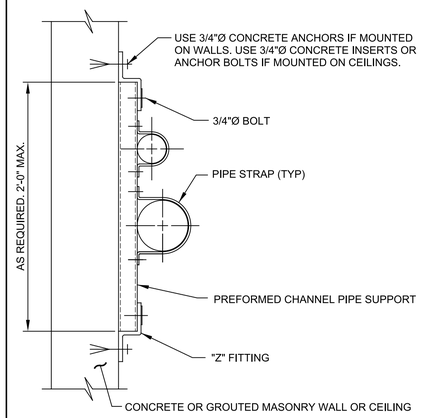

NOTES:

1. IF SUPPORT IS SUBMERGED OR LOCATED BELOW THE TOP OF WALL IN WATER BEARING STRUCTURE, ALL MATERIAL SHALL BE STAINLESS STEEL. IN ALL OTHER AREAS, THE MATERIALS SHALL BE HOT-DIP GALVANIZED STEEL UNLESS OTHERWISE INDICATED ON THE DRAWINGS. HOT-DIP GALVANIZE AFTER FABRICATION.
2. SPACE PREFORMED CHANNEL PIPE SUPPORTS AT MAXIMUM 5'-0" O.C.

P660 TYP — FLUSH MOUNT PIPE SUPPORT

N — 09/06/13

CONTRACT DOCUMENTS DATED JUNE 10, 2022, AS PART OF THE BIDDING DOCUMENTS (DRAWINGS AND SPECIFICATIONS) AND SUBSEQUENTLY ISSUED ADDENDA HAVE BEEN MODIFIED TO INCORPORATE IN A SET OF DOCUMENTS FOR THE CONVENIENCE OF THE CONTRACTOR. IF INCONSISTENCIES OR AMBIGUITIES BETWEEN "CONFORMED" DOCUMENTS AND CONTRACT DOCUMENTS ARE FOUND, THE CONTRACT DOCUMENTS SHALL GOVERN.

THIS CONFORMED DOCUMENT IS RELEASED FOR THE CONVENIENCE OF THE CONTRACTOR UNDER THE AUTHORITY OF:
11-01-22
DATE
DANNY M. HURTADO, P.E.
TX LIC NO. 104266
SEE DISCLAIMER FOR LIMITATIONS OF USE.

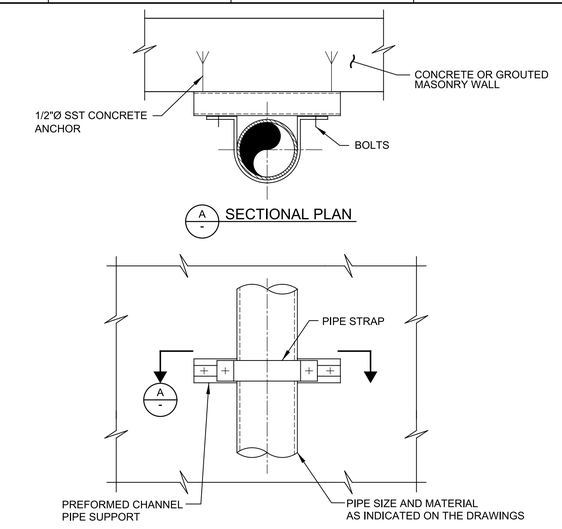

NOTE:

1. IF SUPPORT IS SUBMERGED OR LOCATED BELOW THE TOP OF WALL IN WATER BEARING STRUCTURE, ALL MATERIAL SHALL BE STAINLESS STEEL. IN ALL OTHER AREAS, THE MATERIALS SHALL BE HOT-DIP GALVANIZED STEEL UNLESS OTHERWISE INDICATED ON THE DRAWINGS. HOT-DIP GALVANIZE AFTER FABRICATION.

P662 TYP — PIPE SUPPORT FOR ONE VERTICAL RISER

07/01/13

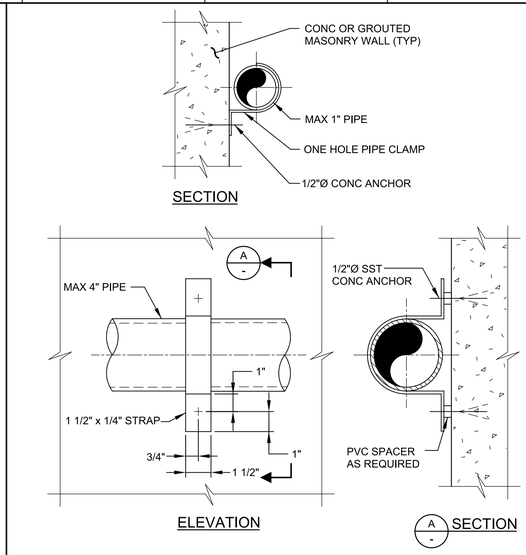

NOTE:

1. IF SUPPORT IS SUBMERGED OR LOCATED BELOW THE TOP OF WALL IN WATER BEARING STRUCTURE, ALL MATERIAL SHALL BE STAINLESS STEEL. IN ALL OTHER AREAS, ALL MATERIAL SHALL BE HOT-DIP GALVANIZED STEEL UNLESS OTHERWISE INDICATED ON THE DRAWINGS.

P664 TYP — PIPE SUPPORT - WALL STRAP

07/31/08

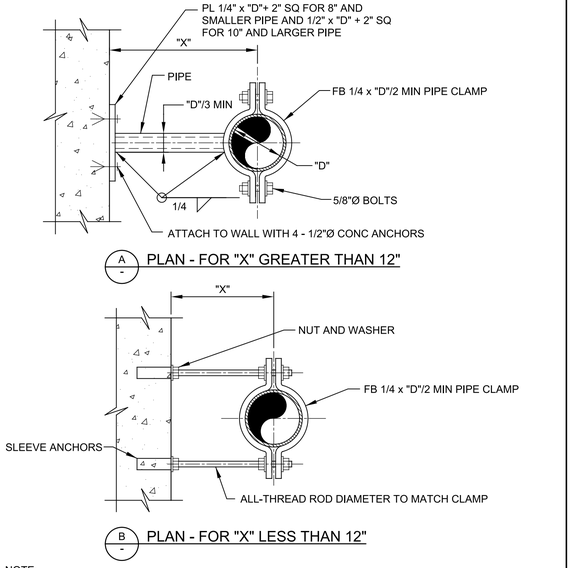

NOTE:

1. IF SUPPORT IS SUBMERGED OR LOCATED BELOW THE TOP OF WALL IN WATER BEARING STRUCTURE, ALL MATERIAL SHALL BE STAINLESS STEEL. IN ALL OTHER AREAS, ALL MATERIAL SHALL BE HOT-DIP GALVANIZED STEEL UNLESS OTHERWISE INDICATED ON THE DRAWINGS.

P668 TYP — VERTICAL PIPE SWAY BRACE

S — 07/31/08

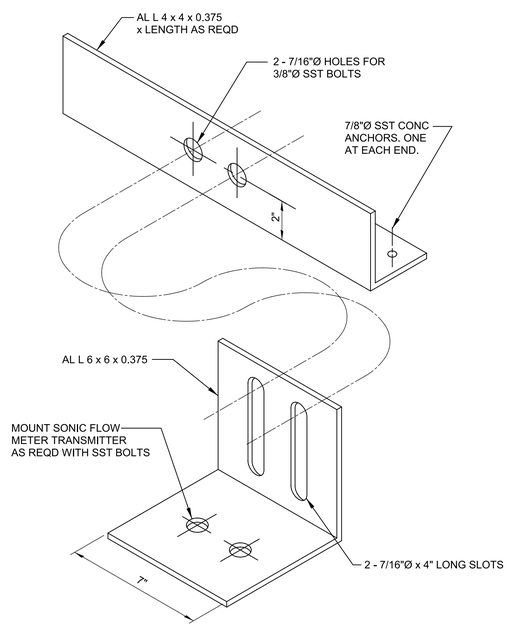

P680 TYP — LEVEL SENSOR SUPPORT

08/01/05

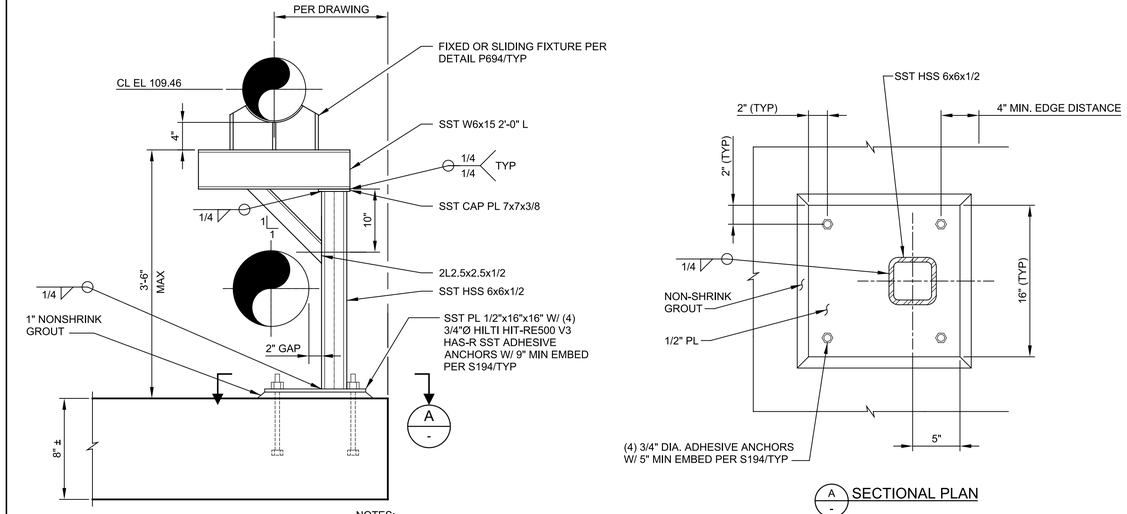

NOTES:

1. PIPE SUPPORTS SHALL BE SPACES AS INDICATED ON DRAWINGS.
2. IF PIPE SUPPORT IS SUBMERGED OR BELOW TOP OF WALL IN WATER BEARING STRUCTURES, MATERIAL FOR ANCHOR BOLTS, BOLTS, PIPE STRAP, STRUCTURAL STEEL AND ALL CONNECTIONS AND MATERIALS SHOWN SHALL BE STAINLESS STEEL. IN ALL OTHER AREAS, MATERIALS SHALL BE HOT-DIP GALVANIZED STEEL UNLESS OTHERWISE INDICATED ON THE DRAWINGS.
3. PIPE SADDLE SHALL BE WELDED CONSTRUCTION.

P690 TYP — AIR PIPE SUPPORT - CANTILEVER

N — 03-05-21

REV	DATE	BY	DESCRIPTION
			CONFORMED DOCUMENTS

DESIGNED DMH
DRAWN SDW
CHECKED JPH
DATE NOVEMBER 2022

** ORIGINAL SEALED BY DANNY M. HURTADO 06-10-22 TX PE 104266 **

carollo® TBPELS No. F-882

CITY OF AUSTIN — FOUNDED 1839

CITY OF AUSTIN

CITY OF AUSTIN
WILD HORSE RANCH WWTP EXPANSION
TYPICAL DETAILS
PIPING
TYPICAL DETAILS 6

VERIFY SCALES
BAR IS ONE INCH ON ORIGINAL DRAWING
0 1"
IF NOT ONE INCH ON THIS SHEET, ADJUST SCALES ACCORDINGLY

JOB NO. 10976A.00
DRAWING NO. 00TP06
SHEET NO. 65 OF 464

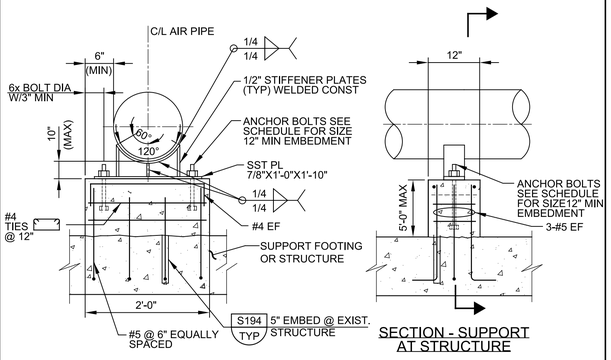

SECTION - SUPPORT AT STRUCTURE

SCHEDULE	
PIPE SIZE	ANCHOR BOLT DIA
4" - 12"	1/2"
14" - 24"	5/8"
26" - 36"	3/4"

NOTE:

1. MATERIAL FOR THREADED ROD, NUTS AND WASHERS SHALL BE STAINLESS STEEL.
2. PIPE SUPPORT IS TO BE USED FOR 4"Ø AND LARGER PIPE.
3. IF SUPPORT IS SUBMERGED OR LOCATED BELOW TOP OF WALL IN WATER BEARING STRUCTURE, MATERIAL FOR ANCHOR BOLTS AND STRAP SHALL BE STAINLESS STEEL. IN ALL OTYER AREAS, MATERIAL SHALL BE HOTP-DIP GALVANIZED STEEL UNLESS OTHERWISE INDICATED ON THE DRAWINGS.

P691 TYP N — AIR PIPE, FIXED SUPPORT, CONCRETE

03-05-21

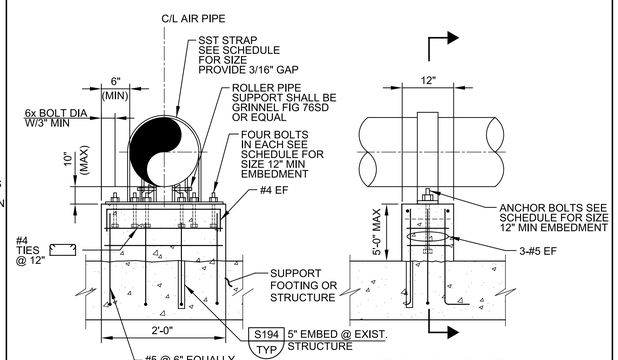

SECTION - SUPPORT AT STRUCTURE

SCHEDULE		
PIPE SIZE	STRAP SIZE	ANCHOR BOLT DIA
4" - 12"	FB 1/4" x 4"	1/2"
14" - 24"	FB 5/16" x 4"	5/8"
26" - 36"	FB 3/8" x 4"	3/4"

NOTE:

1. MATERIAL FOR THREADED ROD, NUTS AND WASHERS SHALL BE STAINLESS STEEL.
2. PIPE SUPPORT IS TO BE USED FOR 4"Ø AND LARGER PIPE.
3. IF SUPPORT IS SUBMERGED OR LOCATED BELOW TOP OF WALL IN WATER BEARING STRUCTURE, MATERIAL FOR ANCHOR BOLTS AND STRAP SHALL BE STAINLESS STEEL. IN ALL OTHER AREAS, MATERIAL SHALL BE HOT-DIP GALVANIZED STEEL UNLESS OTHERWISE INDICATED ON THE DRAWINGS.

P692 TYP N — AIR PIPE, ROLLER SUPPORT, CONCRETE

03-05-21

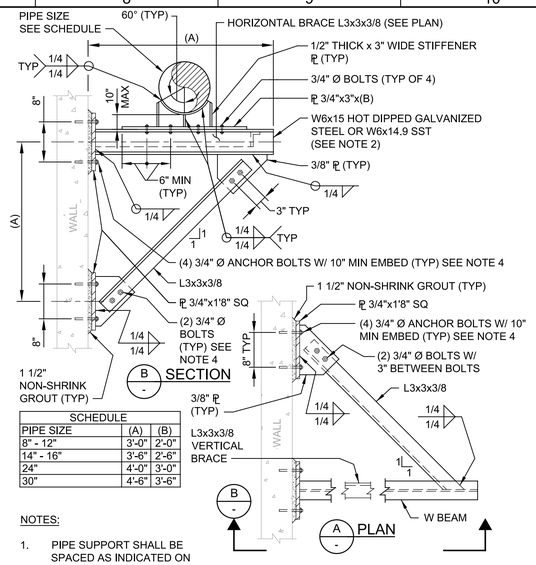

SCHEDULE		
PIPE SIZE	(A)	(B)
8" - 12"	3'-0"	2'-0"
14" - 16"	3'-6"	2'-6"
24"	4'-0"	3'-0"
30"	4'-6"	3'-6"

NOTES:

1. PIPE SUPPORT SHALL BE SPACED AS INDICATED ON DRAWINGS.
2. IF PIPE SUPPORT IS SUBMERGED OR BELOW THE TOP OF WALL IN WATER BEARING STRUCTURES, MATERIAL FOR ANCHOR BOLTS, BOLTS, PIPE STRAP, STRUCTURAL STEEL AND ALL CONNECTIONS AND MATERIALS SHOWN SHALL BE STAINLESS STEEL. IN ALL OTHER AREAS, MATERIAL SHALL BE HOT-DIP GALVANIZED STEEL UNLESS OTHERWISE INDICATED ON THE DRAWINGS.
3. PIPE SADDLE SHALL BE WELDED CONSTRUCTION.

P693 TYP N — AIR PIPE, FIXED SUPPORT, BRACKET

04/29/09

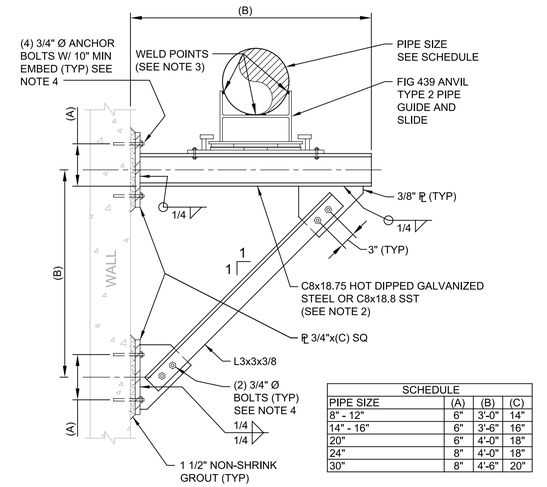

SCHEDULE			
PIPE SIZE	(A)	(B)	(C)
8" - 12"	6"	3'-0"	14"
14" - 16"	6"	3'-6"	16"
20"	6"	4'-0"	18"
24"	8"	4'-0"	18"
30"	8"	4'-6"	20"

NOTES:

1. PIPE SUPPORT SHALL BE SPACED AT 10'-0" O.C. MAX.
2. IF PIPE SUPPORT IS SUBMERGED OR BELOW THE TOP OF WALL IN WATER BEARING STRUCTURES, MATERIAL FOR ANCHOR BOLTS, BOLTS, PIPE STRAP, STRUCTURAL STEEL AND ALL CONNECTIONS AND MATERIALS SHOWN SHALL BE STAINLESS STEEL. IN ALL OTHER AREAS, MATERIAL SHALL BE HOT-DIP GALVANIZED STEEL UNLESS OTHERWISE INDICATED ON THE DRAWINGS.
3. PROVIDE WELD POINTS NOT TO EXCEED THE MINIMUM OF PIPE THICKNESS MINUS 1/16" OR FIG 439 ANVIL MINUS 1/16"

P694 TYP N — AIR PIPE, SLIDE SUPPORT

04/29/09

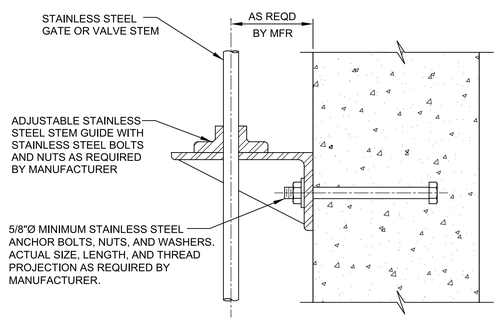

P750 TYP — STEM GUIDE

08/01/05

THIS CONFORMED DOCUMENT IS RELEASED FOR THE CONVENIENCE OF THE CONTRACTOR UNDER THE AUTHORITY OF:

DANNY M HURTADO, P.E.
TX LIC NO. 104266

11-01-22
DATE

SEE DISCLAIMER FOR LIMITATIONS OF USE.

CONTRACT DOCUMENTS DATED JUNE 10, 2022, AS PART OF THE BIDDING DOCUMENTS (DRAWINGS AND SPECIFICATIONS) AND SUBSEQUENTLY ISSUED ADDENDA HAVE BEEN MERGED INTO ONE CONFORMING SET OF DOCUMENTS FOR THE CONVENIENCE OF THE CONTRACTOR. IF INCONSISTENCIES OR AMBIGUITIES BETWEEN "CONFORMED" DOCUMENTS AND CONTRACT DOCUMENTS ARE FOUND, THE CONTRACT DOCUMENTS SHALL GOVERN.

CONFORMED DOCUMENTS

REV	DATE	BY	DESCRIPTION

DESIGNED DMH
DRAWN SDW
CHECKED JPH
DATE NOVEMBER 2022

** ORIGINAL SEALED BY DANNY M. HURTADO 06-10-22 TX PE 104266 **

carollo® TBPELS No. F-882

CITY OF AUSTIN

CITY OF AUSTIN
WILD HORSE RANCH WWTP EXPANSION
TYPICALS
PIPING TYPICAL DETAILS 7

VERIFY SCALES
BAR IS ONE INCH ON ORIGINAL DRAWING
0 1"
IF NOT ONE INCH ON THIS SHEET, ADJUST SCALES ACCORDINGLY

JOB NO. 10976A.00
DRAWING NO. 00TP07
SHEET NO. 66 OF 464

PROJECT NO. 10976A10 FILE NAME: 10976A1000TP007.dgn

Model: Layout1 ColorTable: gshade.ctb DesignScript: Carollo_Std_Pen_v0905.pen PlotScale: 1:1 Plot Date: 10-OCT-2022 10:06:56 AM User: LDietzel LAST SAVED BY: ldietzel

Plot Date: 10-OCT-2022 10:09:32 AM
User: LDietzel
Model: Layout1 ColorTable: gshade.ctb DesignScript: Carollo_Std_Pen_v0905.pen PlotScale: 1:1
LAST SAVED BY: ldietzel

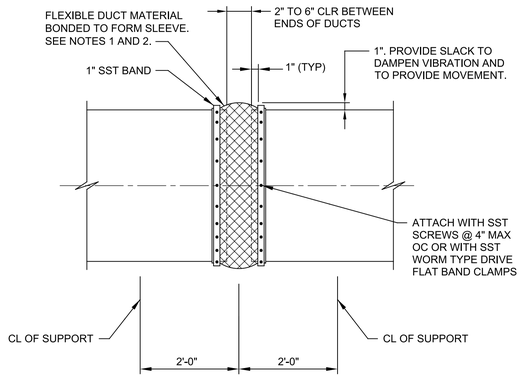

NOTES:

1. BOND LONGITUDINAL JOINT PER MANUFACTURER'S RECOMMENDATION.
2. FOR FLEXIBLE CONNECTOR TYPE FL-1 OR FL-2 ONLY.
3. FOR EXTERIOR LOCATIONS, PROVIDE SHEET METAL COVER.

HA120 TYP S — CONNECTION - FLEXIBLE FOR METAL DUCTS (FL-1 OR FL-2)

5/17/18

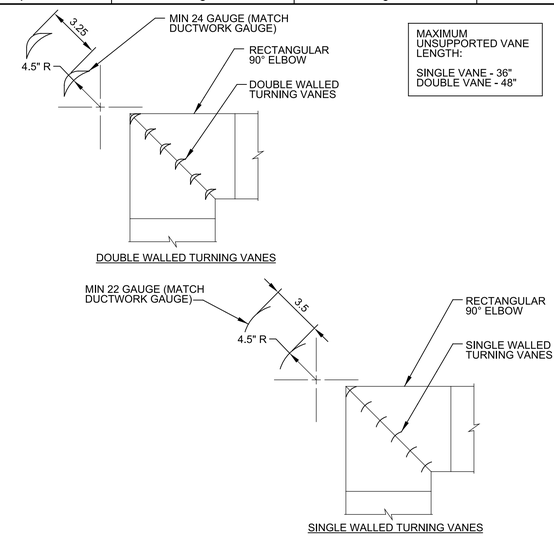

MAXIMUM UNSUPPORTED VANE LENGTH:

SINGLE VANE - 36"
DOUBLE VANE - 48"

NOTES:

1. INSTALL VANES IN SECTIONS OR USE TIE RODS TO LIMIT THE UNBRACED VANE LENGTH.
2. VANES SHALL BE SECURELY FASTENED TO RUNNERS.
3. ALL VANES SHALL BE SECURE AND STABLE IN INSTALLED OPERATING POSITION. IF NECESSARY, AT CERTAIN VELOCITIES OR PRESSURES WELD VANES TO RUNNERS ON APPROPRIATE INTERVALS ALONG RUNNERS.
4. OTHER VANE SIZES, SPACINGS OR CONFIGURATIONS CAN BE REVIEWED BY ENGINEER OF RECORD FOR APPROVAL.

HA320 TYP S — TURNING VANES FOR METAL DUCT

SHEET 1 OF 2 5/17/18

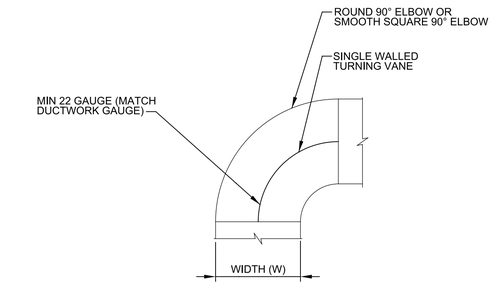

SINGLE WALLED TURNING VANES

CENTERLINE R = 3W/2 UNLESS OTHERWISE SPECIFIED - IS NOT RESTRICTED TO 90° SQUARE THROAT OR SMOOTH RADIUS ELBOW.

NOTES:

1. INSTALL VANES IN SECTIONS OR USE TIE RODS TO LIMIT THE UNBRACED VANE LENGTH.
2. VANES SHALL BE SECURELY FASTENED TO RUNNERS.
3. ALL VANES SHALL BE SECURE AND STABLE IN INSTALLED OPERATING POSITION. IF NECESSARY, AT CERTAIN VELOCITIES OR PRESSURES WELD VANES TO RUNNERS ON APPROPRIATE INTERVALS ALONG RUNNERS.
4. OTHER VANE SIZES, SPACINGS OR CONFIGURATIONS CAN BE REVIEWED BY ENGINEER OF RECORD FOR APPROVAL.

HA320 TYP S — TURNING VANES FOR METAL DUCT

SHEET 2 OF 2 5/17/18

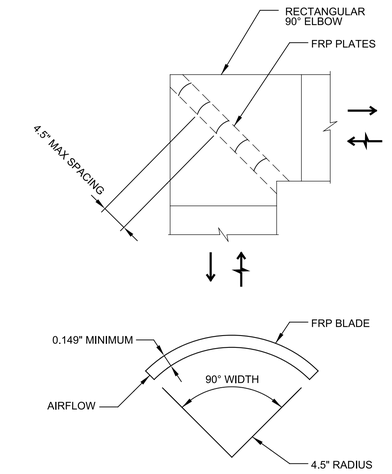

NOTES:

1. WHERE DUCT HEIGHT EXCEEDS 48", INSTALL VANES IN MODULES WHOSE INDIVIDUAL HEIGHT IS LESS THAN 48" AND ARE PLATE REINFORCED TOP AND BOTTOM.
2. SECURE VANES, TOP, AND BOTTOM FRP PLATES, TO FRP DUCT SHEET WITH RESIN. WHERE DUCT HEIGHT REQUIRES MULTIPLE VANE MODULES, ALSO SECURE ENDS OF INTERMEDIATE STIFFENER PLATE(S) TO ELBOW THROAT AND HEEL.

HA340 TYP S — TURNING VANES FOR FRP DUCT

5/17/18

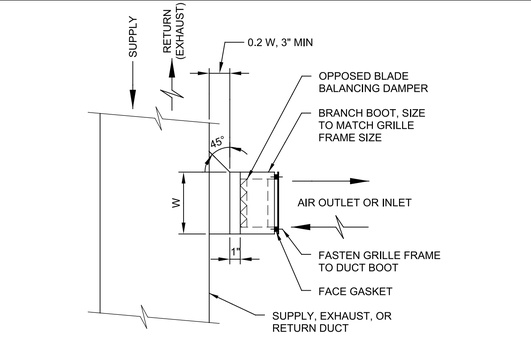

PLAN

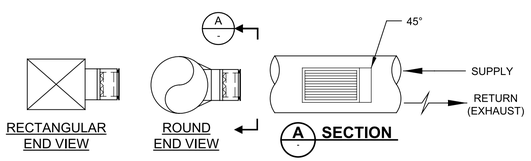

HA520 TYP S — GRILLE - SUPPLY/RETURN/EXHAUST - METAL

11/13/18

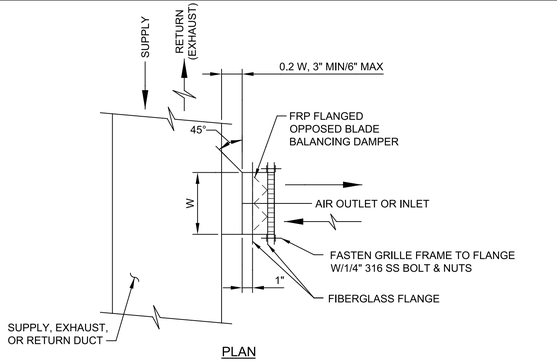

PLAN

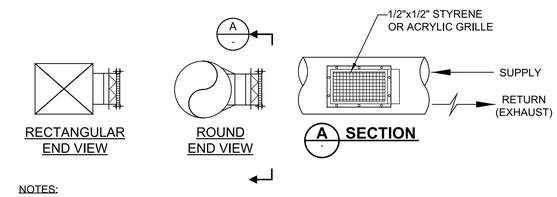

NOTES:

1. SUPPLY GRILLE SIZES ARE FROM INSIDE TO INSIDE OF GRILLE STOP, AS INDICATED ON THE DRAWINGS.
2. GRILLE LATTICE WORK TO OCCUPY NO MORE THAN 9% OF TOTAL GRILLE AREA.
3. ALL FIBERGLASS PIECES SHALL MATCH COLOR OF FIBERGLASS DUCT.
4. PROVIDE SHOE TAP AS INDICATED ON DRAWINGS.
5. PROVIDE FRP TURNING VANES IN SUPPLY GRILLES UNLESS NOTED OTHERWISE ON DRAWINGS.

HA550 TYP S — GRILLE - SUPPLY/RETURN/EXHAUST - FRP

SHEET 1 OF 3 5/17/18

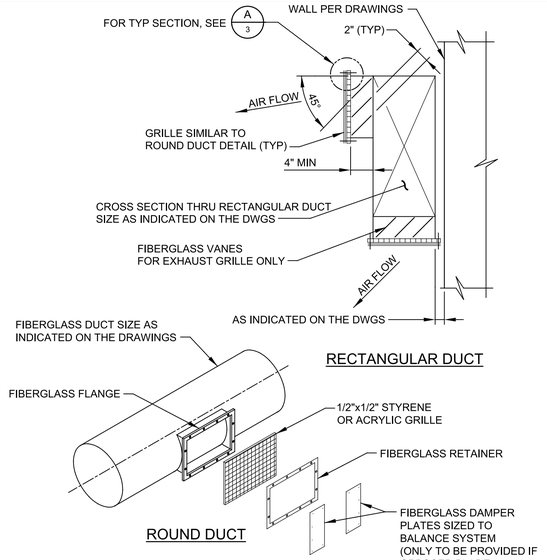

HA550 TYP S — GRILLE - SUPPLY/RETURN/EXHAUST - FRP

SHEET 2 OF 3 5/17/18

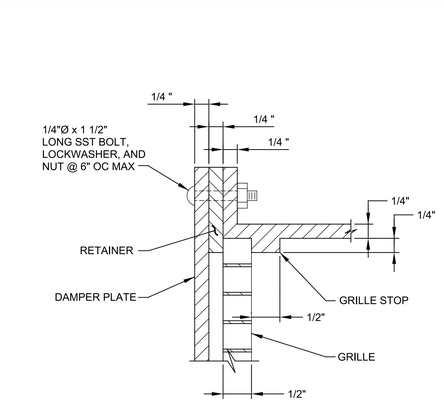

THIS CONFORMED DOCUMENT IS RELEASED FOR THE CONVENIENCE OF THE CONTRACTOR UNDER THE AUTHORITY OF:

DANNY M HURTADO, P.E.
TX LIC NO. 104266

11-01-22
DATE

SEE DISCLAIMER FOR LIMITATIONS OF USE.

CONTRACT DOCUMENTS DATED JUNE 10, 2022, AS PART OF THE BIDDING DOCUMENTS (DRAWINGS AND SPECIFICATIONS) AND SUBSEQUENTLY ISSUED ADDENDA HAVE BEEN MERGED INTO ONE CONFORMING SET OF DOCUMENTS FOR THE CONVENIENCE OF THE CONTRACTOR. IF INCONSISTENCIES OR AMBIGUITIES BETWEEN "CONFORMED" DOCUMENTS AND CONTRACT DOCUMENTS ARE FOUND, THE CONTRACT DOCUMENTS SHALL GOVERN.

HA550 TYP S — GRILLE - SUPPLY/RETURN/EXHAUST - FRP

SHEET 3 OF 3 5/17/18

REV	DATE	BY	DESCRIPTION
			CONFORMED DOCUMENTS

DESIGNED CE
DRAWN CE
CHECKED CE
DATE NOVEMBER 2022

** ORIGINAL SEALED BY CHAD GREEN 06-10-22 TX PE 119980 **

carollo® TBPELS No. F-882

CITY OF AUSTIN

CITY OF AUSTIN
WILD HORSE RANCH WWTP EXPANSION
TYPICAL DETAILS
HVAC
TYPICAL DETAILS 1

VERIFY SCALES
BAR IS ONE INCH ON ORIGINAL DRAWING
0 1"
IF NOT ONE INCH ON THIS SHEET, ADJUST SCALES ACCORDINGLY

JOB NO. 10976A.00
DRAWING NO. 00TH01
SHEET NO. 67 OF 464

Plot Date: 10-OCT-2022 10:11:50 AM
User: LDietzel
Model: Layout1 ColorTable: gshade.ctb DesignScript: Carollo_Std_Pen_v0905.pen PlotScale: 1:1
LAST SAVED BY: ldietzel

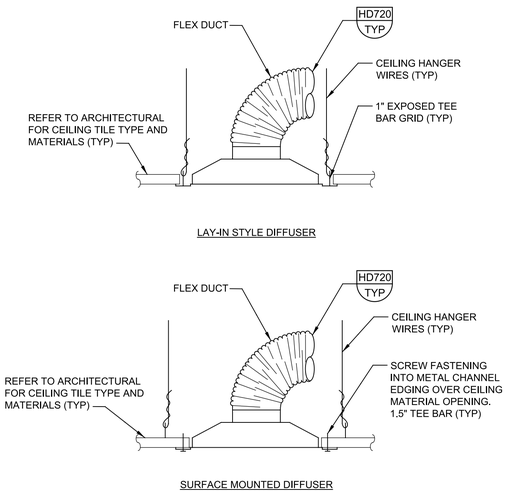

NOTE:
1. EXPOSED AND CONCEALED TEE BAR FRAMES, CEILING TILES, CEILING TO BE PROVIDED BY THE CEILING CONTRACTOR.

HA580 TYP — DIFFUSER - SUPPLY/RETURN/EXHAUST - CEILING

S 5/18/18

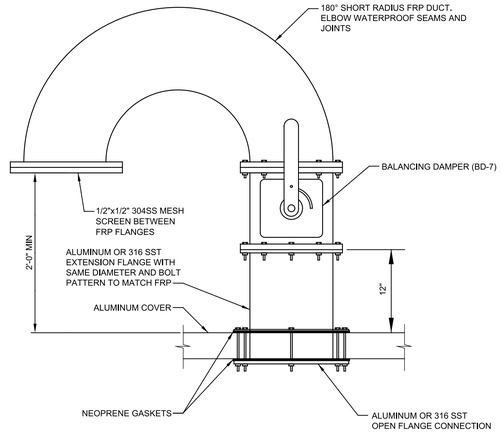

FRP GOOSENECK

NOTES:

1. MINIMUM HEIGHT OF GOOSENECK SHALL BE SUITABLE TO CLEAR SNOW HEIGHT WHERE REQUIRED.

2. ALL HARDWARE SHALL BE 316 SST

HD140 TYP — GOOSENECK - ALUMINUM COVER

R 3/31/21

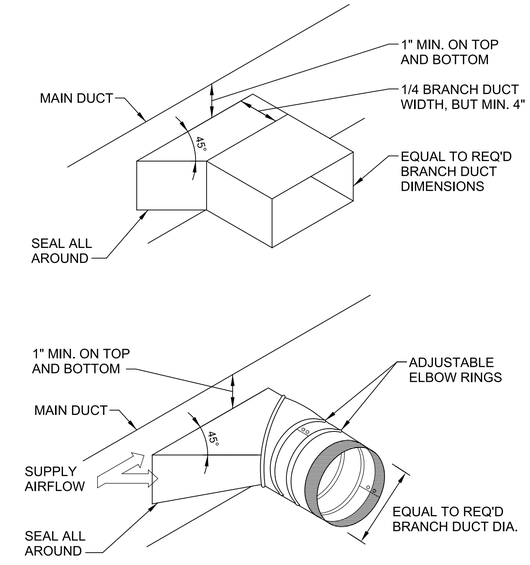

HD320 TYP — TAKE-OFF BRANCH FITTING

S 5/16/18

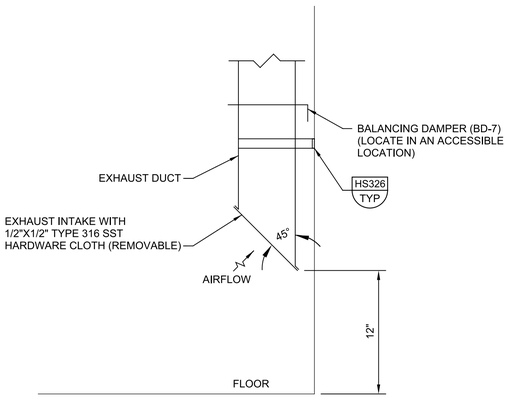

HD540 TYP — TERMINATION - EXHAUST DUCT DROP

R 3/31/21

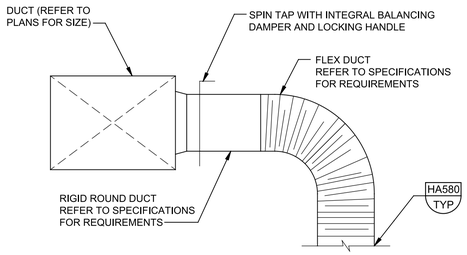

NOTE:
1. CEILING SUPPORT SYSTEM MUST SUPPORT DIFFUSER WEIGHT WHEN FLEXIBLE DUCTWORK/CONNECTIONS ARE USED, NOT THE DUCT ITSELF.

HD720 TYP — FLEXIBLE - BRANCH CONNECTION TO AIR DEVICE

06/10/18

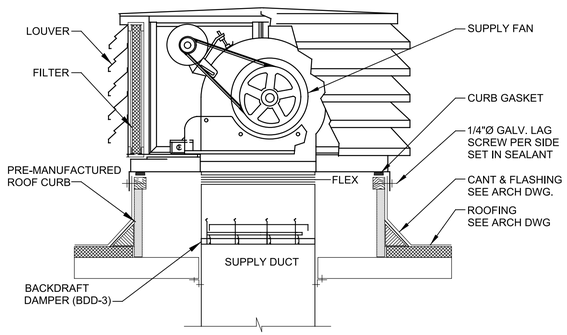

NOTE:

1. VERIFY EXACT OUTSIDE AND INSIDE DIMENSIONS OF ROOF CURB AND ROOF OPENING WITH EQUIPMENT AS PURCHASED.

HE120 TYP — FAN - ROOF MOUNTED CENTRIFUGAL SUPPLY

S 5/21/18

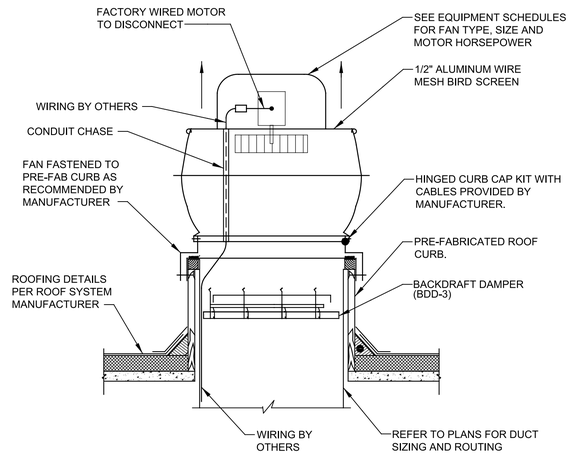

NOTES:

1. BACKDRAFT DAMPER LOCATED IN CURB, PROVIDED BY EXHAUST FAN MANUFACTURER. REFER TO SCHEDULES AND SPECIFICATIONS FOR TYPE REQUIRED.
2. SEE FLOOR PLANS AND/OR SECTIONS FOR EXACT DUCT CONFIGURATION AND SIZING.
3. FAN SHALL BE HIGH WIND RATED. CURB SHALL BE HIGH WIND RATED AND PROVIDED BY FAN MANUFACTURER. REFER TO MANUFACTURER FOR INSTALLATION REQUIREMENTS.
4. TOP OF CURB SHALL BE LEVEL. TAPER SIDES OF PREFAB CURB AS REQUIRED.
5. REFER TO FAN SPECIFICATION FOR CURB HEIGHT.

HE126 TYP — FAN - ROOF MOUNTED CENTRIFUGAL EXHAUST

S 5/21/18

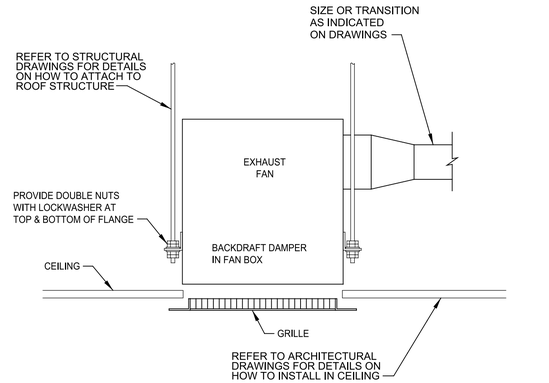

THIS CONFORMED DOCUMENT IS RELEASED FOR THE CONVENIENCE OF THE CONTRACTOR UNDER THE AUTHORITY OF:

DANNY M HURTADO, P.E.
TX LIC NO. 104266

11-01-22
DATE

SEE DISCLAIMER FOR LIMITATIONS OF USE.

CONTRACT DOCUMENTS DATED JUNE 10, 2022, AS PART OF THE BIDDING DOCUMENTS (DRAWINGS AND SPECIFICATIONS) AND SUBSEQUENTLY ISSUED ADDENDA HAVE BEEN MERGED INTO ONE CONFORMING SET OF DOCUMENTS FOR THE CONVENIENCE OF THE CONTRACTOR. IF INCONSISTENCIES OR AMBIGUITIES BETWEEN "CONFORMED" DOCUMENTS AND CONTRACT DOCUMENTS ARE FOUND, THE CONTRACT DOCUMENTS SHALL GOVERN.

HE150 TYP — FAN - CEILING RESTROOM EXHAUST

S 5/22/18

REV	DATE	BY	DESCRIPTION
			CONFORMED DOCUMENTS

DESIGNED CE
DRAWN CE
CHECKED CE
DATE NOVEMBER 2022

** ORIGINAL SEALED BY CHAD GREEN 06-10-22 TX PE 119980 **

carollo® TBPELS No. F-882

CITY OF AUSTIN — FOUNDED 1839

CITY OF AUSTIN

CITY OF AUSTIN
WILD HORSE RANCH WWTP EXPANSION
TYPICAL DETAILS
HVAC
TYPICAL DETAILS 2

VERIFY SCALES
BAR IS ONE INCH ON ORIGINAL DRAWING
0 1"
IF NOT ONE INCH ON THIS SHEET, ADJUST SCALES ACCORDINGLY

JOB NO. 10976A.00
DRAWING NO. 00TH02
SHEET NO. 68 OF 464

PROJECT NO. 10976A10 FILE NAME: 10976A1000TH002.dgn

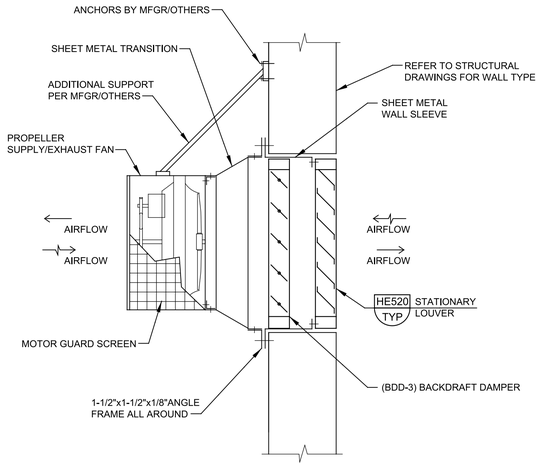

NOTES:

1. SEAL AIRTIGHT AND WATER TIGHT PER LOUVER MFGR RECOMMENDATIONS.

HE166 TYP S — FAN - WALL MOUNTED PROPELLER SUPPLY/EXHAUST

5/23/18

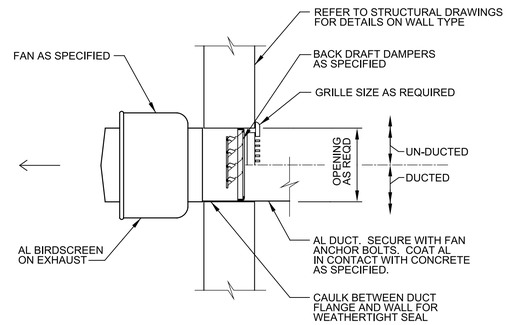

NOTES:

1. MOUNT ON WALL WITH STAINLESS STEEL CONCRETE ANCHORS.
2. ANCHOR TYPE/SIZE TO BE PROVIDED BY MFGR/CONTRACTOR PER PROJECT SITE DESIGN CRITERIA.
3. FOR SPLIT-FACE BLOCK, GRIND OR GROUT FACE TO PROVIDE A SMOOTH, PLANAR MOUNTING SURFACE.

HE172 TYP S — FAN - WALL MOUNTED CENTRIFUGAL EXHAUST

5/23/18

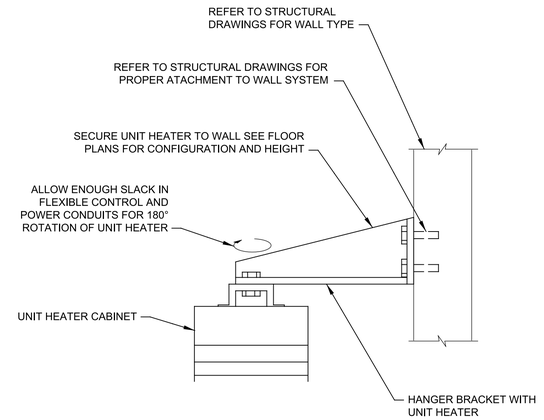

HE350 TYP S — UNIT HEATER - WALL MOUNT - ELECTRIC

5/23/18

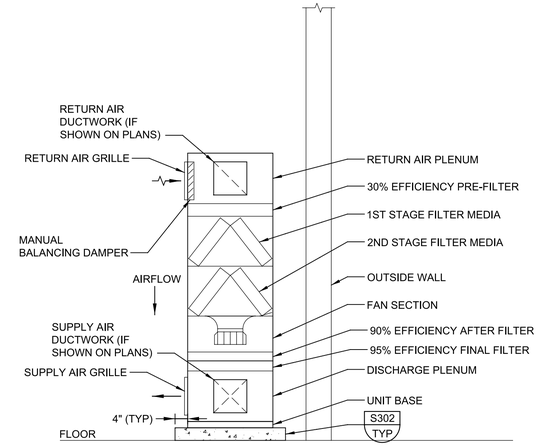

NOTES:

1. INSULATE OUTSIDE AIR DUCT FROM WALL TO UNIT.

HE454 TYP R — POSITIVE PRESSURIZATION UNIT FLOOR MOUNTED - VERTICAL

3/31/21

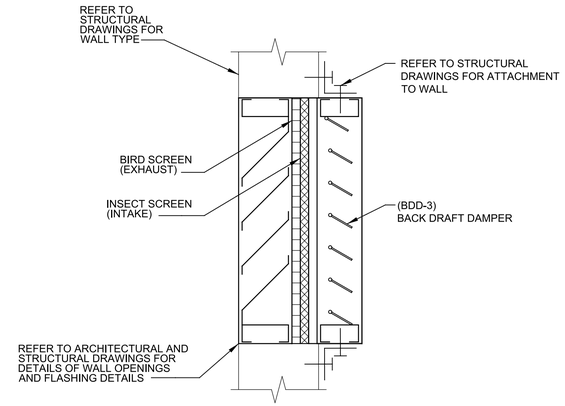

NOTES:

1. ALL FASTENERS SHALL BE STAINLESS STEEL.
2. REFER TO MANUFACTURE RECOMMENDATIONS FOR INSTALLATION.
3. COORDINATE THE SEQUENCE OF INSTALLATION OF DAMPERS AND LOUVERS WITH THE STRUCTURAL BRACING AND EXTERIOR WALL.

HE520 TYP S — LOUVER - STATIONARY - INTAKE/EXHAUST

12/28/18

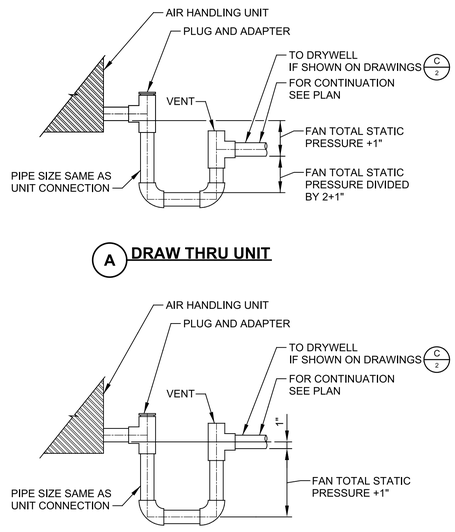

HE620 TYP S — PIPE CONNECTION - AC CONDENSATE

SHEET 1 OF 2 12/28/18

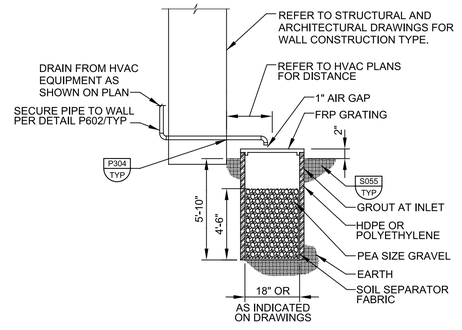

NOTE:

1. ROUTE CONDENSATE LINE BELOW GRADE AND ENTER SIDE OF DRYWELL IF CONDENSATE PIPE IS TRIPPING HAZARD.

HE620 TYP S — PIPE CONNECTION - AC CONDENSATE

SHEET 2 OF 2 12/28/18

THIS CONFORMED DOCUMENT IS RELEASED FOR THE CONVENIENCE OF THE CONTRACTOR UNDER THE AUTHORITY OF:

11-01-22

DANNY M HURTADO, P.E. DATE
TX LIC NO. 104266

SEE DISCLAIMER FOR LIMITATIONS OF USE.

CONTRACT DOCUMENTS DATED JUNE 10, 2022, AS PART OF THE BIDDING DOCUMENTS (DRAWINGS AND SPECIFICATIONS) AND SUBSEQUENTLY ISSUED ADDENDA HAVE BEEN MERGED INTO ONE CONFORMING SET OF DOCUMENTS FOR THE CONVENIENCE OF THE CONTRACTOR. IF INCONSISTENCIES OR AMBIGUITIES BETWEEN "CONFORMED" DOCUMENTS AND CONTRACT DOCUMENTS ARE FOUND, THE CONTRACT DOCUMENTS SHALL GOVERN.

REV	DATE	BY	DESCRIPTION
			CONFORMED DOCUMENTS

DESIGNED CE
DRAWN CE
CHECKED CE
DATE NOVEMBER 2022

** ORIGINAL SEALED BY CHAD GREEN 06-10-22 TX PE 119980 **

carollo® TBPELS No. F-882

CITY OF AUSTIN — FOUNDED 1839

CITY OF AUSTIN

CITY OF AUSTIN
WILD HORSE RANCH WWTP EXPANSION
TYPICAL DETAILS
HVAC
TYPICAL DETAILS 3

VERIFY SCALES
BAR IS ONE INCH ON ORIGINAL DRAWING
0 1"
IF NOT ONE INCH ON THIS SHEET, ADJUST SCALES ACCORDINGLY

JOB NO. 10976A.00
DRAWING NO. 00TH03
SHEET NO. 69 OF 464

PROJECT NO. 10976A10 FILE NAME: 10976A1000TH003.dgn

Plot Date: 10-OCT-2022 10:13:20 AM
User: LDietzel
PlotScale: 1:1
DesignScript: Carollo_Std_Pen_v0905.pen
ColorTable: gshade.ctb
Model: Layout1
LAST SAVED BY: ldietzel

THIS CONFORMED DOCUMENT IS RELEASED FOR THE CONVENIENCE OF THE CONTRACTOR UNDER THE AUTHORITY OF:

11-01-22

DANNY M HURTADO, P.E. DATE
TX LIC NO. 104266

SEE DISCLAIMER FOR LIMITATIONS OF USE.

CONTRACT DOCUMENTS DATED JUNE 10, 2022, AS PART OF THE BIDDING DOCUMENTS (DRAWINGS AND SPECIFICATIONS) AND SUBSEQUENTLY ISSUED ADDENDA HAVE BEEN MERGED INTO ONE CONFORMING SET OF DOCUMENTS FOR THE CONVENIENCE OF THE CONTRACTOR. IF INCONSISTENCIES OR AMBIGUITIES BETWEEN "CONFORMED" DOCUMENTS AND CONTRACT DOCUMENTS ARE FOUND, THE CONTRACT DOCUMENTS SHALL GOVERN.

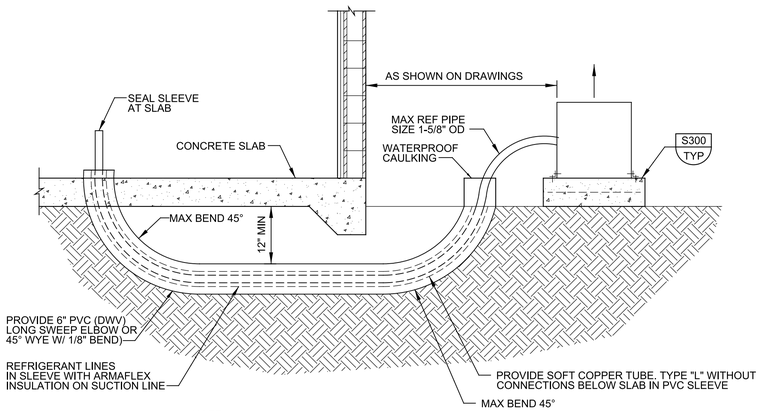

NOTE:

1. CONTRACTOR TO PROVIDE WIND PRESSURE CALCULATIONS AND TIE DOWN DETAIL FOR UNIT PER LOCAL PROJECT SITE DESIGN CRITERIA FOR ENGINEER REVIEW AND APPROVAL

HE690 TYP S — PIPE CONNECTION - REFRIGERANT BELOW GRADE

08/16/18

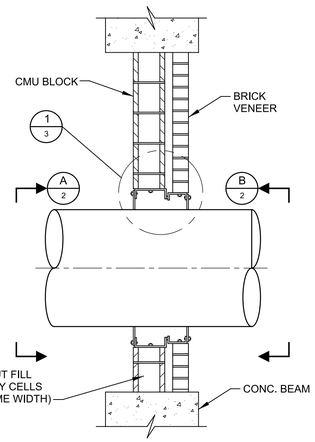

NOTES:

1. PROVIDE MIN 1/8" EXPANSION GAP, SEAL ACCORDING TO SPECS.
2. CONTRACTOR SHALL INSTALL HORIZONTAL MEMBERS FIRST AND USE A JACK TO COMPRESS BLOCK ABOVE BEFORE WELDING VERTICAL MEMBERS.

HO410 TYP S — PENETRATION FOR ROUND FRP DUCT - WALL

SHEET 1 OF 3 3/12/19

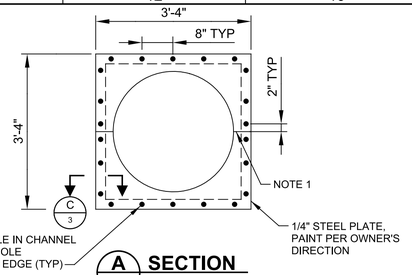

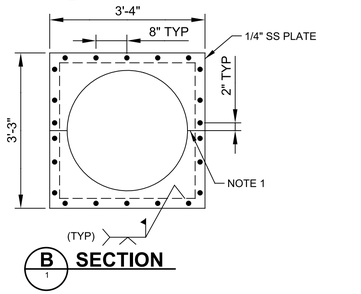

NOTES:

1. PROVIDE MIN 1/8" EXPANSION GAP, SEAL ACCORDING TO SPECS.
2. CONTRACTOR SHALL INSTALL HORIZONTAL MEMBERS FIRST AND USE A JACK TO COMPRESS BLOCK ABOVE BEFORE WELDING VERTICAL MEMBERS.

HO410 TYP S — PENETRATION FOR ROUND FRP DUCT - WALL

SHEET 2 OF 3 3/12/19

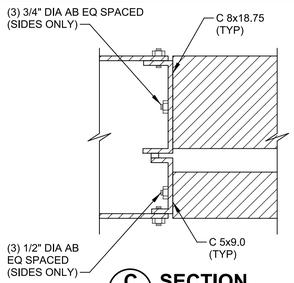

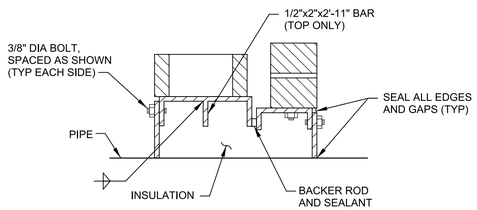

NOTES:

1. PROVIDE MIN 1/8" EXPANSION GAP, SEAL ACCORDING TO SPECS.
2. CONTRACTOR SHALL INSTALL HORIZONTAL MEMBERS FIRST AND USE A JACK TO COMPRESS BLOCK ABOVE BEFORE WELDING VERTICAL MEMBERS.

HO410 TYP S — PENETRATION FOR ROUND FRP DUCT - WALL

SHEET 3 OF 3 3/12/19

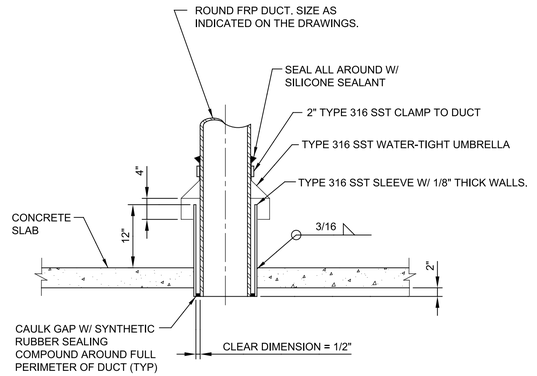

HO428 TYP S — PENETRATION FOR ROUND FRP DUCT - SLAB

9/07/18

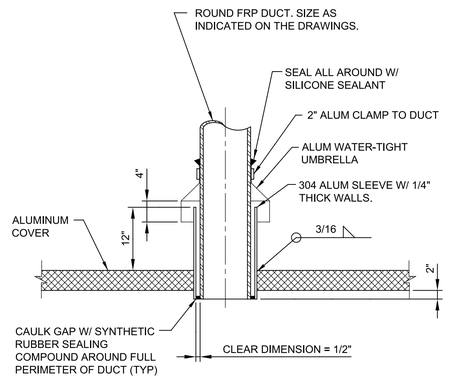

HO436 TYP S — PENETRATION FOR ROUND FRP DUCT - ALUMINUM COVER

9/07/18

NOTES:

1. INSTALL WHERE SHOWN ON PLANS AND AT ALL LOW POINTS IN DUCT.
2. 2"Ø FRP NIPPLE TO BE THREADED INTO BLIND FLANGE.
3. INSTALL 12" STUBOUT ON DUCTS 12"Ø AND LARGER INSTALL A 6" STUBOUT ON DUCTS 6"-12"Ø. INTERIOR OF DUCT AT STUBOUT SHALL BE SMOOTH AND WITHOUT PROTRUSION ABOVE FLOWLINE OF DUCT.

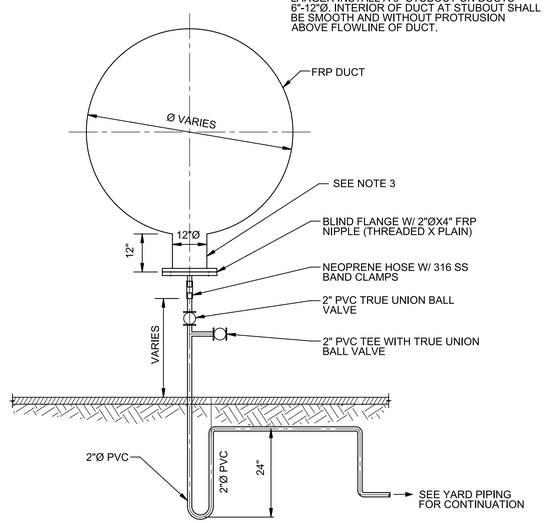

HO730 TYP S — CONDENSATE DRAIN FOR FRP DUCT - 2" DIAMETER BELOW GRADE

9/07/18

REV	DATE	BY	DESCRIPTION
			CONFORMED DOCUMENTS

DESIGNED CE
DRAWN CE
CHECKED CE
DATE NOVEMBER 2022

** ORIGINAL SEALED BY CHAD GREEN 06-10-22 TX PE 119980 **

carollo® TBPELS No. F-882

CITY OF AUSTIN — FOUNDED 1839

CITY OF AUSTIN

CITY OF AUSTIN
WILD HORSE RANCH WWTP EXPANSION
TYPICAL DETAILS
HVAC
TYPICAL DETAILS 4

VERIFY SCALES
BAR IS ONE INCH ON ORIGINAL DRAWING
0 1"
IF NOT ONE INCH ON THIS SHEET, ADJUST SCALES ACCORDINGLY

JOB NO. 10976A.00
DRAWING NO. 00TH04
SHEET NO. 70 OF 464

PROJECT NO. 10976A10 FILE NAME: 10976A1000TH004.dgn

Plot Date: 10-OCT-2022 10:14:45 AM
User: LDietzel
Model: Layout1 ColorTable: gshade.ctb DesignScript: Carollo_Std_Pen_v0905.pen PlotScale: 1:1
LAST SAVED BY: ldietzel

Plot Date: 10-OCT-2022 10:16:43 AM
User: LDietzel
Model: Layout1 ColorTable: gshade.ctb DesignScript: Carollo_Std_Pen_v0905.pen PlotScale: 1:1
LAST SAVED BY: ldietzel

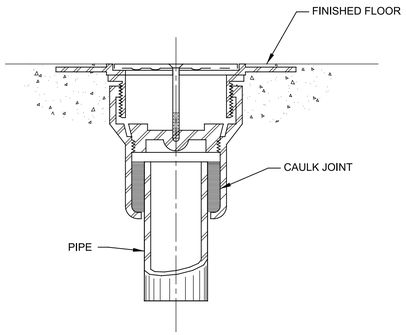

HP110 TYP S — CLEANOUT INSIDE BUILDING - FLOOR

2/2/19

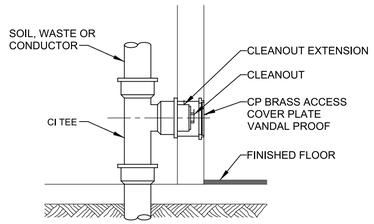

HP120 TYP S — CLEANOUT INSIDE BUILDING - FLUSH WALL

9/12/18

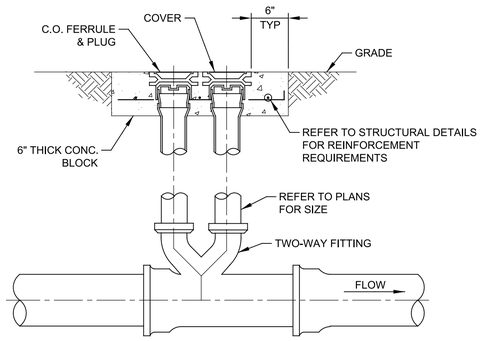

HP130 TYP S — CLEANOUT OUTSIDE BUILDING - DOUBLE

9/12/18

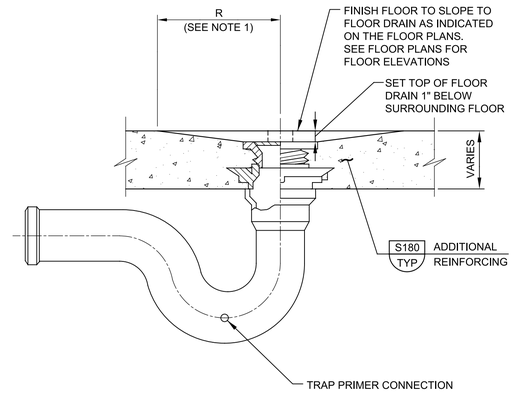

NOTE:

1. PROVIDE 12" RADIUS SLOPE TO EQUIPMENT DRAINS WHERE FLOOR DOES NOT SLOPE TO DRAIN.
2. TRAP IS REQUIRED WHEN DRAINING INTO SANITARY SEWER ONLY, UNLESS OTHERWISE INDICATED ON PLAN.

HP220 TYP S — DRAIN WITH TRAP - FLOOR

9/12/18

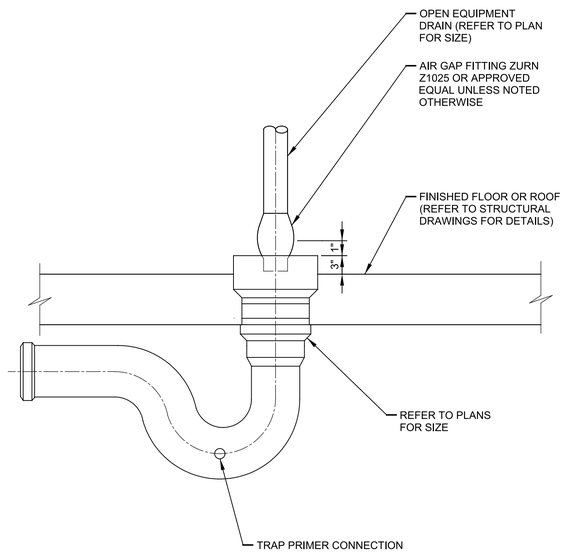

HP230 TYP S — DRAIN WITH TRAP - OPEN EQUIPMENT

9/12/18

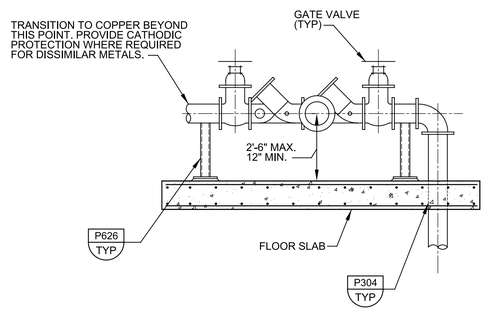

NOTES:

1. ALL PIPING FOR THIS ASSEMBLY TO BE DUCTILE IRON ABOVE GRADE. REFER TO SPECIFICATION SECTION 40_05_19.01 FOR REQUIREMENTS FOR DUCTILE IRON PIPING. TRANSITION TO COPPER PIPING AFTER LAST TEE TO BE CONTINUED THROUGHOUT THE BUILDING.

HP410 TYP S — BACKFLOW PREVENTER INSIDE BUILDING - SINGLE

2/23/2021

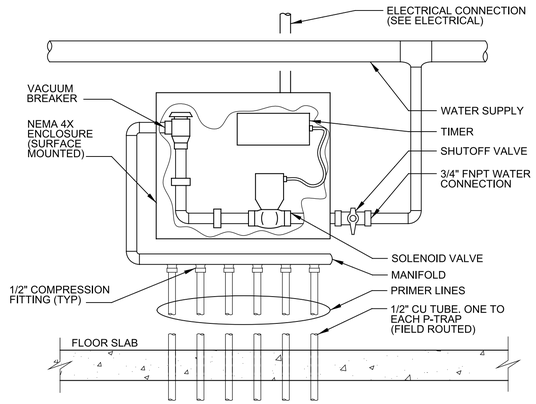

HP520 TYP S — TRAP PRIMER - ELECTRONIC

9/13/18

THIS CONFORMED DOCUMENT IS RELEASED FOR THE CONVENIENCE OF THE CONTRACTOR UNDER THE AUTHORITY OF:

DANNY M HURTADO, P.E.
TX LIC NO. 104266

11-01-22
DATE

SEE DISCLAIMER FOR LIMITATIONS OF USE.

CONTRACT DOCUMENTS DATED JUNE 10, 2022, AS PART OF THE BIDDING DOCUMENTS (DRAWINGS AND SPECIFICATIONS) AND SUBSEQUENTLY ISSUED ADDENDA HAVE BEEN MERGED INTO ONE CONFORMING SET OF DOCUMENTS FOR THE CONVENIENCE OF THE CONTRACTOR. IF INCONSISTENCIES OR AMBIGUITIES BETWEEN "CONFORMED" DOCUMENTS AND CONTRACT DOCUMENTS ARE FOUND, THE CONTRACT DOCUMENTS SHALL GOVERN.

REV	DATE	BY	DESCRIPTION
			CONFORMED DOCUMENTS

DESIGNED CE
DRAWN CE
CHECKED CE
DATE NOVEMBER 2022

** ORIGINAL SEALED BY CHAD GREEN 06-10-22 TX PE 119980 **

carollo® TBPELS No. F-882

CITY OF AUSTIN — FOUNDED 1839

CITY OF AUSTIN

CITY OF AUSTIN
WILD HORSE RANCH WWTP EXPANSION
TYPICAL DETAILS
HVAC
TYPICAL DETAILS 5

VERIFY SCALES
BAR IS ONE INCH ON ORIGINAL DRAWING
0 1"
IF NOT ONE INCH ON THIS SHEET, ADJUST SCALES ACCORDINGLY

JOB NO. 10976A.00
DRAWING NO. 00TH05
SHEET NO. 71 OF 464

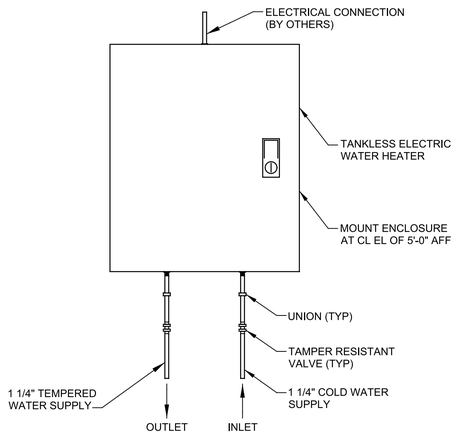

HP530 TYP S — WATER HEATER - INSTANTANEOUS ELECTRIC - SAFETY EQUIPMENT -WALL MOUNTED

SHEET 1 OF 2 10/6/20

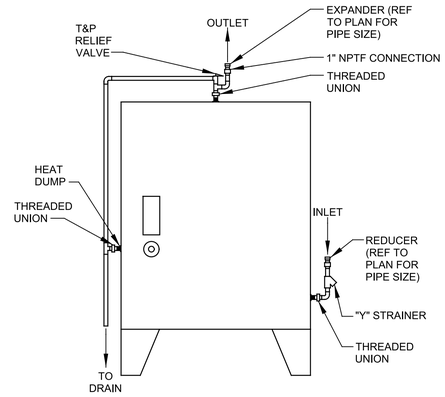

THIS CONFORMED DOCUMENT IS RELEASED FOR THE CONVENIENCE OF THE CONTRACTOR UNDER THE AUTHORITY OF:

DANNY M HURTADO, P.E.
TX LIC NO. 104266

11-01-22
DATE

SEE DISCLAIMER FOR LIMITATIONS OF USE.

CONTRACT DOCUMENTS DATED JUNE 10, 2022, AS PART OF THE BIDDING DOCUMENTS (DRAWINGS AND SPECIFICATIONS) AND SUBSEQUENTLY ISSUED ADDENDA HAVE BEEN MERGED INTO ONE CONFORMING SET OF DOCUMENTS FOR THE CONVENIENCE OF THE CONTRACTOR. IF INCONSISTENCIES OR AMBIGUITIES BETWEEN "CONFORMED" DOCUMENTS AND CONTRACT DOCUMENTS ARE FOUND, THE CONTRACT DOCUMENTS SHALL GOVERN.

HP530 TYP S — WATER HEATER - INSTANTANEOUS ELECTRIC - SAFETY EQUIPMENT - FLOOR MOUNTED

SHEET 2 OF 2 10/6/20

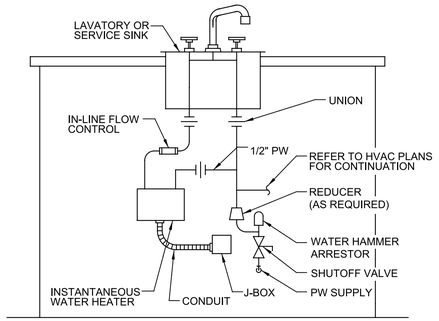

HP538 TYP S — WATER HEATER - INSTANTANEOUS ELECTRIC - SINK

9/13/18

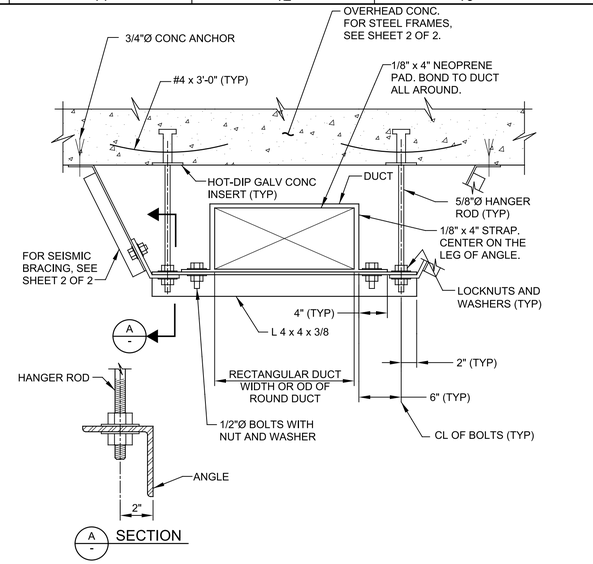

NOTES:

1. ALL METAL SHALL BE HOT-DIP GALV STEEL UNLESS OTHERWISE INDICATED ON THE DWGS.
2. SEE DRAWINGS FOR THE SIZE OF DUCT.
3. TO APPLY TO ALL RECTANGULAR DUCTS & ALL ROUND DUCTS 18" AND LARGER.

HS184 TYP S — DUCT SUPPORT FOR RECTANGULAR/ROUND DUCT - TRAPEZE FROM OVERHEAD

SHEET 1 OF 2 9/14/18

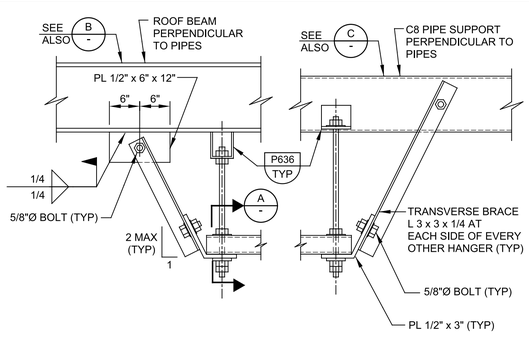

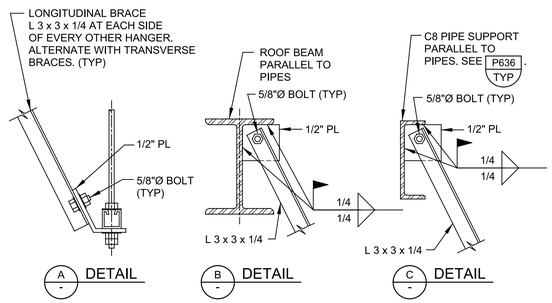

HS184 TYP S — DUCT SUPPORT FOR RECTANGULAR/ROUND DUCT - TRAPEZE FROM OVERHEAD

SHEET 2 OF 2 9/14/18

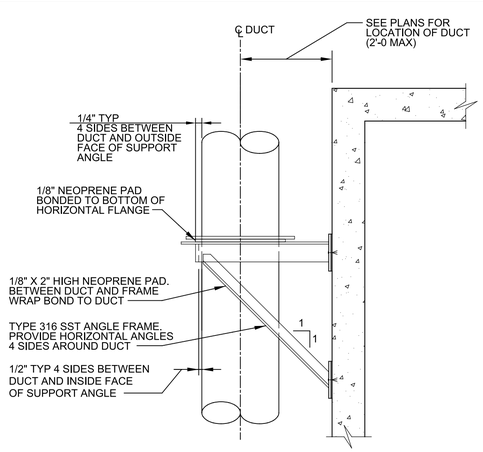

AIR DUCT HANGER AND SUPPORT SCHEDULE		
DUCT DIA	ANGLE SIZE	SPACING WHEN NOT INDICATED ON THE DRAWINGS
LESS THAN 18"	L2 x 2 x 0.250	8'-0" OC MAX
18" THRU 40"	L2 1/2" x 2 1/2" x 0.375	8'-0" OC MAX
GREATER THAN 40"	L3 x 3 x 0.375	4'-0" OC MAX

HS326 TYP S — DUCT SUPPORT FOR VERTICAL ROUND DUCT - WALL LATERAL BRACE

9/14/18

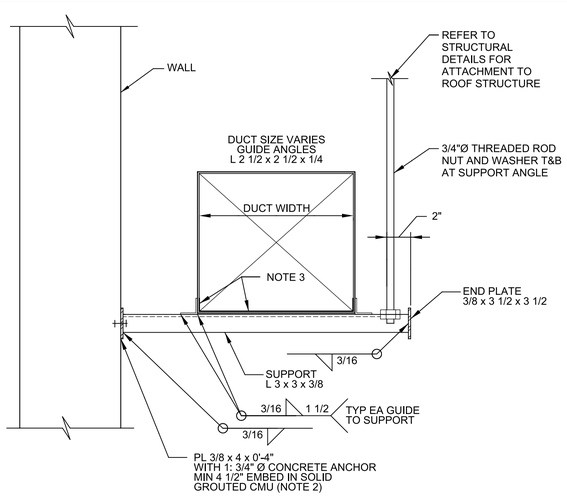

RECTANGULAR DUCT

NOTE:

1. ALL TYPE 316 SST CONSTRUCTION.
2. SOLID CROUTED CMU TO EXTEND MIN 12" ALL AROUND PAST CENTERLINE OF ANCHOR.
3. 1/8" THICK NEOPRENE x WIDTH OF ANGLE BONDED TO TYPE 316 SST ANGLES WITH EPOXY. (TYP BOTTOM AND SIDES OF DUCT)

HS370 TYP S — DUCT SUPPORT FOR HORIZONTAL RECTANGULAR/ ROUND DUCT - TRAPEZE FROM WALL

SHEET 1 OF 2 9/14/18

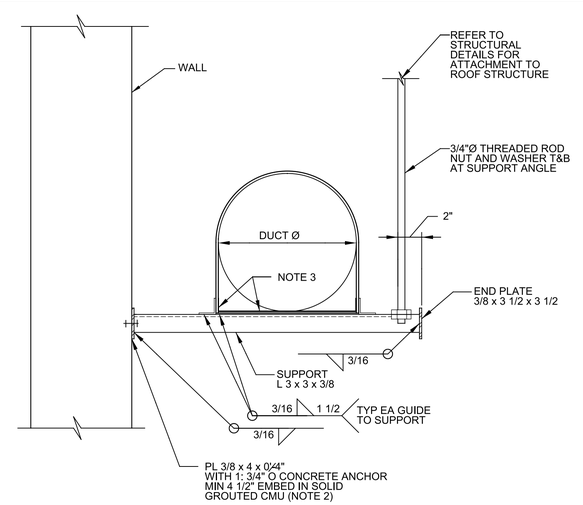

ROUND DUCT

NOTE:

1. ALL TYPE 316 SST CONSTRUCTION.
2. SOLID CROUTED CMU TO EXTEND MIN 12" ALL AROUND PAST CENTERLINE OF ANCHOR.
3. 1/8" THICK NEOPRENE x WIDTH OF ANGLE BONDED TO TYPE 316 SST ANGLES WITH EPOXY. (TYP BOTTOM AND SIDES OF DUCT)

HS370 TYP S — DUCT SUPPORT FOR HORIZONTAL RECTANGULAR/ ROUND DUCT - TRAPEZE FROM WALL

SHEET 2 OF 2 9/14/18

REV	DATE	BY	DESCRIPTION
			CONFORMED DOCUMENTS

DESIGNED CE
DRAWN CE
CHECKED CE
DATE NOVEMBER 2022

** ORIGINAL SEALED BY CHAD GREEN 06-10-22 TX PE 119980 **

carollo®
TBPELS No. F-882

CITY OF AUSTIN
FOUNDED 1839

CITY OF AUSTIN

CITY OF AUSTIN
WILD HORSE RANCH WWTP EXPANSION
TYPICAL DETAILS
HVAC
TYPICAL DETAILS 6

VERIFY SCALES
BAR IS ONE INCH ON ORIGINAL DRAWING
0 1"
IF NOT ONE INCH ON THIS SHEET, ADJUST SCALES ACCORDINGLY

JOB NO. 10976A.00
DRAWING NO. 00TH06
SHEET NO. 72 OF 464

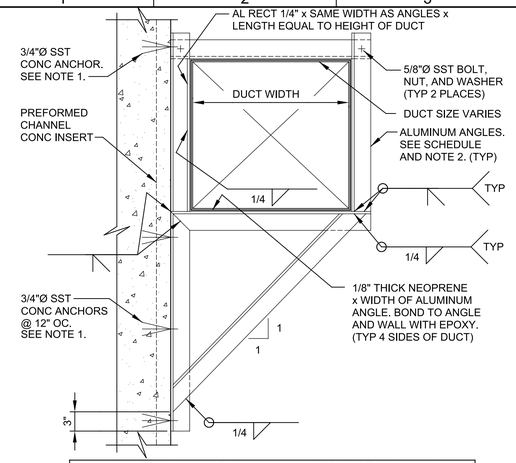

AIR DUCT HANGER AND SUPPORT SCHEDULE		
DUCT WIDTH	ANGLE SIZE	SPACING WHEN NOT INDICATED ON THE DRAWINGS
LESS THAN 18"	L 2 x 2 x 0.250	8'-0" OC MAX
18" THRU 40"	L 2 1/2 x 2 1/2 x 0.375	8'-0" OC MAX
GREATER THAN 40"	L 3 x 3 x 0.375	4'-0" OC MAX

NOTES:

1. WHERE PREFORMED CHANNEL CONC INSERTS ARE PROVIDED IN CONC WALLS, ATTACH SUPPORT TO INSERTS IN LIEU OF USING CONCRETE ANCHORS.
2. DUCT WIDTH SHALL BE THE LONG DIMENSIONS OF RECTANGULAR DUCT OR THE OUTSIDE DIAMETER OF ROUND DUCT.

HS378 TYP S — DUCT SUPPORT FOR HORIZONTAL RECTANGULAR/ROUND DUCT - WALL BRACKET BELOW

SHEET 1 OF 2 9/14/18

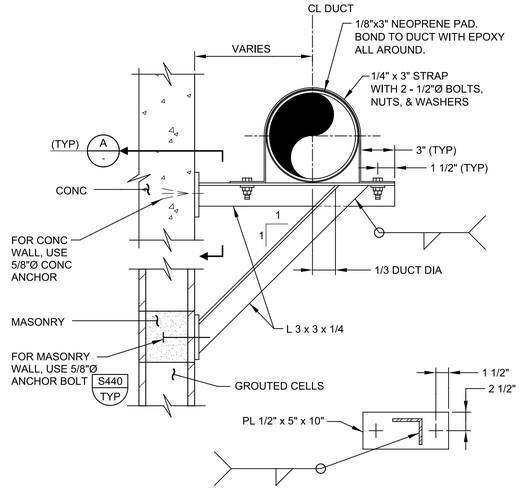

A - SECTION
SCALE: NO SCALE

NOTES:

1. ALL METAL SHAPES SHALL BE TYPE 304 SST UNLESS OTHERWISE INDICATED ON THE DRAWINGS.
2. ALL BOLTS, NUTS, WASHERS, AND CONNECTIONS SHALL BE TYPE 304 SST.
3. SEE DRAWINGS FOR THE SIZE OF DUCT.
4. SHALL APPLY TO ALL RECTANGULAR DUCTS AND ALL ROUND DUCTS 18" AND LARGER.

HS378 TYP S — DUCT SUPPORT FOR HORIZONTAL RECTANGULAR/ROUND DUCT - WALL BRACKET BELOW

SHEET 2 OF 2 9/14/18

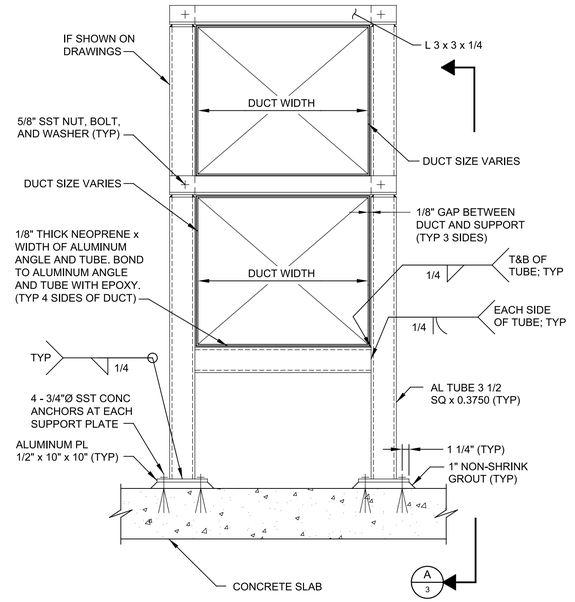

HS510 TYP S — DUCT SUPPORT FOR HORIZONTAL RECTANGULAR/ROUND RIGID FRAME ON SLAB

SHEET 1 OF 3 9/14/18

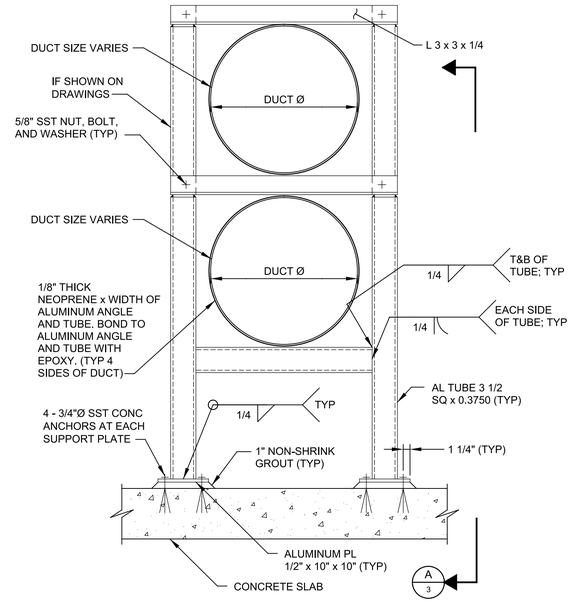

HS510 TYP S — DUCT SUPPORT FOR HORIZONTAL RECTANGULAR/ROUND RIGID FRAME ON SLAB

SHEET 2 OF 3 9/14/18

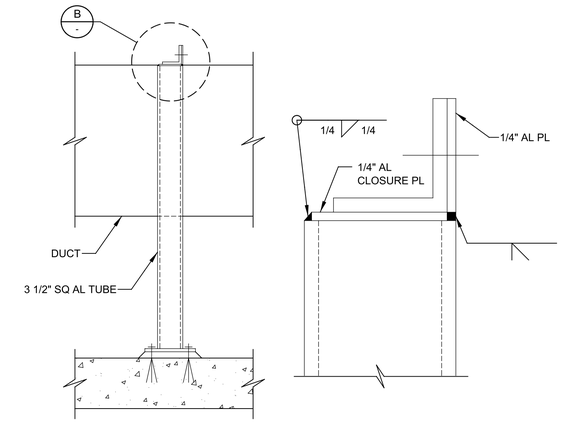

A - ELEVATION

B - DETAIL

AIR DUCT HANGER AND SUPPORT SCHEDULE	
DUCT WIDTH	SPACING WHEN NOT INDICATED ON THE DRAWINGS
40" OR LESS	8'-0" OC MAX
GREATER THAN 40"	4'-0" OC MAX

HS510 TYP S — DUCT SUPPORT FOR HORIZONTAL RECTANGULAR/ROUND RIGID FRAME ON SLAB

SHEET 3 OF 3 9/14/18

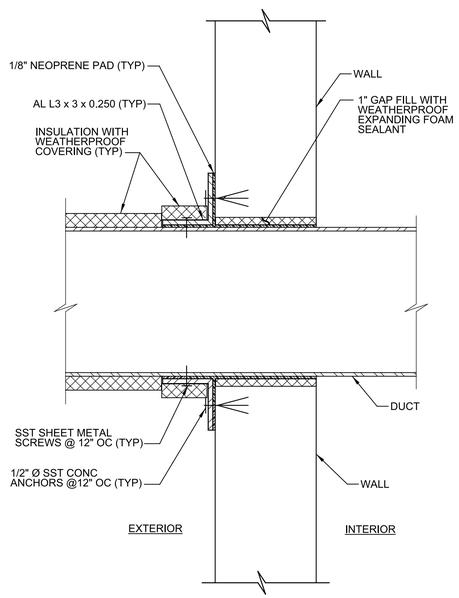

HT350 TYP S — PENETRATION-RECTANGULAR DUCT THROUGH WALL

08/22/18

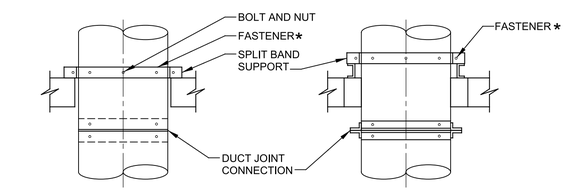

SPLIT BAND SUPPORT DIRECTLY ON FLOOR SLAB

SPLIT BAND SUPPORT BY SUPPLEMENTAL ANGLE OR CHANNEL SPANNING THE SLAB OPENING
USE AISC STEEL HANDBOOK FORMULA FOR SIZING BEAMS WITH TWO CONCENTRATED LOADS

1 - DETAIL

2 - DETAIL

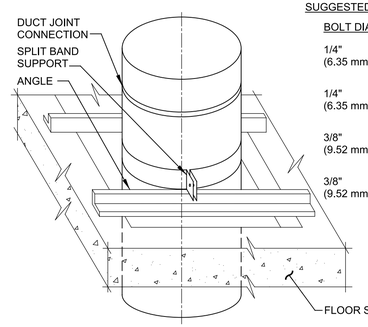

SUGGESTED SIZING FOR SPLIT BAND SUPPORT

BOLT DIA	BAND SIZE	DUCT DIA
1/4" (6.35 mm)	1"x16 GA (25.4 mm x1.61mm)	UP TO 12" DIA 24 GA (UP TO 305 mm DIA 0.70 mm)
1/4" (6.35 mm)	1 1/2"x16 GA (38.1 mm x1.61mm)	13" TO 12" DIA 20 GA (330 mm TO 610 mm DIA 1.00 mm)
3/8" (9.52 mm)	2"x16 GA (51 mm x1.61mm)	25" TO 36" DIA 20 GA (635 mm TO 914 mm DIA 1.00 mm)
3/8" (9.52 mm)	2"x10 GA (51 mm x3.51mm)	37" TO 60" DIA 18 GA (940 mm TO 1524 mm DIA 1.31 mm)

*MINIMUM OF TWO FASTENERS IN EACH HALF OF BAND. OTHERWISE SPACE THEM AT 8" (200mm) AND SO THAT THE LOAD IS SATISFIED.

HT610 TYP S — PENETRATION - ROUND DUCT THROUGH SLAB

08/23/18

THIS CONFORMED DOCUMENT IS RELEASED FOR THE CONVENIENCE OF THE CONTRACTOR UNDER THE AUTHORITY OF:

11-01-22

DANNY M HURTADO, P.E. DATE
TX LIC NO. 104266

SEE DISCLAIMER FOR LIMITATIONS OF USE.

CONTRACT DOCUMENTS DATED JUNE 10, 2022, AS PART OF THE BIDDING DOCUMENTS (DRAWINGS AND SPECIFICATIONS) AND SUBSEQUENTLY ISSUED ADDENDA HAVE BEEN MERGED INTO ONE CONFORMING SET OF DOCUMENTS FOR THE CONVENIENCE OF THE CONTRACTOR. IF INCONSISTENCIES OR AMBIGUITIES BETWEEN "CONFORMED" DOCUMENTS AND CONTRACT DOCUMENTS ARE FOUND, THE CONTRACT DOCUMENTS SHALL GOVERN.

REV	DATE	BY	DESCRIPTION
			CONFORMED DOCUMENTS

DESIGNED CE
DRAWN CE
CHECKED CE
DATE NOVEMBER 2022

** ORIGINAL SEALED BY CHAD GREEN 06-10-22 TX PE 119980 **

carollo® TBPELS No. F-882

CITY OF AUSTIN — FOUNDED 1839

CITY OF AUSTIN

CITY OF AUSTIN
WILD HORSE RANCH WWTP EXPANSION
TYPICAL DETAILS
HVAC
TYPICAL DETAILS 7

VERIFY SCALES
BAR IS ONE INCH ON ORIGINAL DRAWING
0 1"
IF NOT ONE INCH ON THIS SHEET, ADJUST SCALES ACCORDINGLY

JOB NO. 10976A.00
DRAWING NO. 00TH07
SHEET NO. 73 OF 464

PROJECT NO. 10976A10 FILE NAME: 10976A1000TH007.dgn

LAST SAVED BY: idietzel Model: Layout1 ColorTable: gshade.ctb DesignScript: Carollo_Std_Pen_v0905.pen PlotScale: 1:1 Plot Date: 10-OCT-2022 10:20:40 AM User: LDietzel

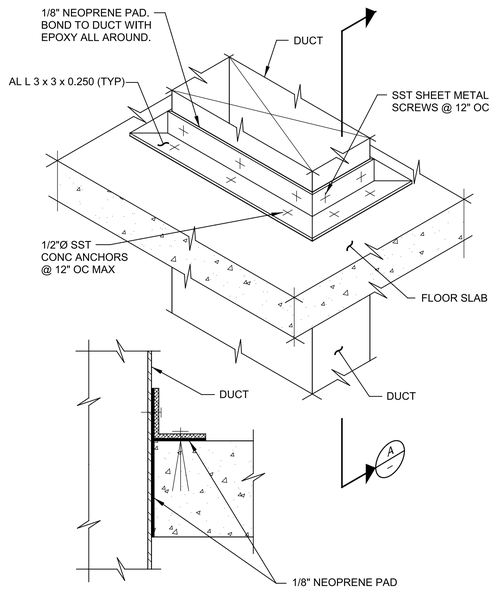

A SECTION

HT650 TYP S PENETRATION - RECTANGULAR DUCT THROUGH SLAB

SHEET 1 OF 2 9/06/18

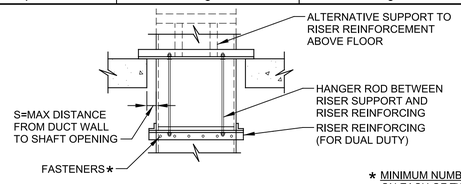

* MINIMUM NUMBER OF FASTENERS ON EACH OF TWO SUPPORT BARS

LARGEST DUCT DIM.	MINIMUM NO. OF FASTENERS
16" AND DOWN	2
17" - 24"	3
OVER 24"	LARGEST DUCT DIM. DIVIDED BY 8

LOCATE A FASTENER WITHIN 2" OF THE DUCT EDGES.
LOCATE OTHERS AT EVENLY SPACED INTERVALS.

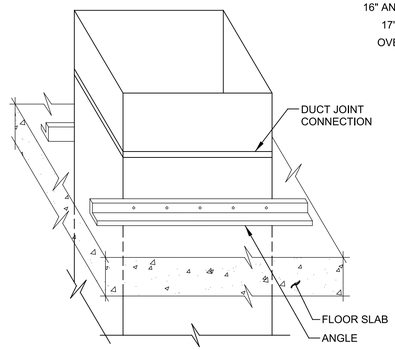

SUGGESTED SIZING FOR SUPPORT OF 12 FT OF DUCT

DUCT SIZE	ANGLE
36"x18"	1 1/2"x1 1/2"x1/8"
48"x24"	1 1/2"x1 1/2"x1/8"
60"x30"	1 1/2"x1 1/2"x3/16"
60"x60"	1 1/2"x1 1/2"x1/4" OR 2"x2"x1/8"

OVER 60" - INCREASE ANGLE SIZE AS REQUIRED FOR SPACE & DUCT SIZE

SUPPORT RISERS SO THAT THEY ARE IN TENSION

FOR DUCTS UP TO 96" - S = 6" MAX
FOR DUCTS OVER 96" - S = 8" MAX
SELECT A PAIR OF ANGLES , EACH OF WHICH HAS A CAPACITY OF AT LEAST 50% OF THE DUCT WEIGHT BEING SUPPORTED

HT650 TYP S PENETRATION - RECTANGULAR DUCT THROUGH SLAB

SHEET 2 OF 2 8/23/18

THIS CONFORMED DOCUMENT IS RELEASED FOR THE CONVENIENCE OF THE CONTRACTOR UNDER THE AUTHORITY OF:

DANNY M HURTADO, P.E. 11-01-22
TX LIC NO. 104266 DATE

SEE DISCLAIMER FOR LIMITATIONS OF USE.

CONTRACT DOCUMENTS DATED JUNE 10, 2022, AS PART OF THE BIDDING DOCUMENTS (DRAWINGS AND SPECIFICATIONS) AND SUBSEQUENTLY ISSUED ADDENDA HAVE BEEN MERGED INTO ONE CONFORMING SET OF DOCUMENTS FOR THE CONVENIENCE OF THE CONTRACTOR. IF INCONSISTENCIES OR AMBIGUITIES BETWEEN "CONFORMED" DOCUMENTS AND CONTRACT DOCUMENTS ARE FOUND, THE CONTRACT DOCUMENTS SHALL GOVERN.

REV	DATE	BY	DESCRIPTION
			CONFORMED DOCUMENTS

DESIGNED CE
DRAWN CE
CHECKED CE
DATE NOVEMBER 2022

** ORIGINAL SEALED BY CHAD GREEN 06-10-22 TX PE 119980 **

carollo® TBPELS No. F-882

CITY OF AUSTIN

CITY OF AUSTIN
WILD HORSE RANCH WWTP EXPANSION
TYPICAL DETAILS
HVAC
TYPICAL DETAILS 8

VERIFY SCALES
BAR IS ONE INCH ON ORIGINAL DRAWING
0 1"
IF NOT ONE INCH ON THIS SHEET, ADJUST SCALES ACCORDINGLY

JOB NO. 10976A.00
DRAWING NO. 00TH08
SHEET NO. 74 OF 464

PROJECT NO. 10976A10 FILE NAME: 10976A1000TH008.dgn

Model: Layout1 ColorTable: gshade.ctb DesignScript: Carollo_Std_Pen_v0905.pen PlotScale: 1:1 Plot Date: 10-OCT-2022 10:22:03 AM User: LDietzel LAST SAVED BY: ldietzel

LIGHTING FIXTURE SCHEDULE

TYPE	LAMP	MANUF./CATALOG NO.	DESCRIPTION
A	LED 10000 LUMENS	HOLOPHANE: EMXH-L48-10000LM-FGFL-WD-50K-90 (OR APPROVED EQUAL)	4-FT CEILING MOUNTED LED LUMINAIRE LENS SHALL BE TEMPERED GLASS. HOUSING SHALL BE FORMED FROM COPPER FREE ALUMINUM. FIXTURE SHALL BE ABLE TO OPERATE IN AN AMBIENT TEMPERATURE RANGE FROM -20°C TO +55°C. TOTAL HARMONIC DISTORTION SHALL BE 20 PERCENT OR LESS DRIVERS AND LED CIRCUIT BOARDS SHALL BE CAPABLE OF BEING DISCONNECTED AND REMOVED FROM THE FIXTURE IN THE FIELD. LED COLOR TEMPERATURE SHALL BE COOL WHITE WITH MINIMUM CRI OF 80. DRIVER POWER FACTOR SHALL BE 0.9 LAGGING AT MINIMUM. THE LUMINAIRE SHALL BE UL LISTED FOR CLASS 1 DIVISION 2 LOCATIONS. COMPLY WITH LIGHTING FIXTURE SCHEDULE NOTE 1.
B	LED 3400 LUMENS	LITHONIA: EPANL-22-34L-50K (OR APPROVED EQUAL)	2-FT x 2-FT FLAT PANEL CEILING MOUNTED LED LUMINAIRE. HOUSING SHALL BE FORMED FROM ALUMINUM. TOTAL HARMONIC DISTORTION SHALL BE 20 PERCENT OR LESS. DRIVERS AND LED CIRCUIT BOARDS SHALL BE CAPABLE OF BEING DISCONNECTED AND REMOVED FROM THE FIXTURE IN THE FIELD. LED COLOR TEMPERATURE SHALL BE COOL WHITE WITH MINIMUM CRI OF 80. DRIVER POWER FACTOR SHALL BE 0.9 LAGGING AT MINIMUM. COMPLY WITH LIGHTING FIXTURE SCHEDULE NOTE 1.
C	LED 21000 LUMENS	HOLOPHANE: HPLED-84-700-5K-AS-UN-L5-55C (OR APPROVED EQUAL)	PENDANT MOUNTED LED LUMINAIRE SHALL INCLUDE A TOTALLY GASKETED AND ENCLOSED OPTICAL ASSEMBLY COMPOSED OF A REFLECTOR, LED BOARD SET AND REFRACTOR. ALL CASTINGS SHALL BE LOW COPPER ALUMINUM ALLOY. THE ELECTRICAL COVER SHALL BE SECURED TO THE ELECTRICAL HOUSING WITH STAINLESS STEEL SCREW AND INSERT FOR ELECTRICAL ACCESS. THE ELECTRICAL ASSEMBLY IS GASKETED AND TOTALLY ENCLOSED. FIXTURE SHALL BE ABLE TO OPERATE IN AN AMBIENT TEMPERATURE RANGE FROM -40°C TO +40°C. TOTAL HARMONIC DISTORTION SHALL BE 20 PERCENT OR LESS. DRIVERS AND LED CIRCUIT BOARDS SHALL BE CAPABLE OF BEING DISCONNECTED AND REMOVED FROM THE FIXTURE IN THE FIELD. LED COLOR TEMPERATURE SHALL BE COOL WHITE, WITH MINIMUM CRI OF 70. DRIVER POWER FACTOR SHALL BE 0.9 LAGGING AT MINIMUM. THE LUMINAIRE SHALL BE UL LISTED FOR CLASS 1 DIVISION 2 LOCATIONS. COMPLY WITH LIGHTING FIXTURE SCHEDULE NOTE 1.
D1	LED 9000 LUMENS	CROUSE-HINDS #VMV9LP/R1/UNV1/S891 AND WITH CORROSION-FREE EPOXY COATING INSIDE AND OUT WITH NATURAL ALUMINUM FINISH. OR APPROVED EQUAL	STANCHION MOUNTED, LED LUMINAIRE WITH TYPE I WALKWAY LIGHT DISTRIBUTION. DRIVER HOUSING SHALL BE OF CORROSION-RESISTANT COPPER FREE ALUMINUM. FIXTURE SHALL BE ABLE TO OPERATE IN AN AMBIENT TEMPERATURE RANGE FROM -20°C TO +55°C. TOTAL HARMONIC DISTORTION SHALL BE 20 PERCENT OR LESS DRIVERS AND LED CIRCUIT BOARDS SHALL BE CAPABLE OF BEING DISCONNECTED AND REMOVED FROM THE FIXTURE IN THE FIELD. LED COLOR TEMPERATURE SHALL BE COOL WHITE WITH MINIMUM CRI OF 80. DRIVER POWER FACTOR SHALL BE 0.9 LAGGING AT MINIMUM. THE LUMINAIRE SHALL BE UL LISTED FOR CLASS 1 DIVISION 2 LOCATIONS.
D2	LED 9000 LUMENS	CROUSE-HINDS #VMV9LP/R5/UNV1/S891 AND WITH CORROSION-FREE EPOXY COATING INSIDE AND OUT WITH NATURAL ALUMINUM FINISH. OR APPROVED EQUAL	STANCHION MOUNTED, LED LUMINAIRE WITH TYPE V AREA LIGHT DISTRIBUTION. DRIVER HOUSING SHALL BE OF CORROSION-RESISTANT COPPER FREE ALUMINUM. FIXTURE SHALL BE ABLE TO OPERATE IN AN AMBIENT TEMPERATURE RANGE FROM -20°C TO +55°C. TOTAL HARMONIC DISTORTION SHALL BE 20 PERCENT OR LESS DRIVERS AND LED CIRCUIT BOARDS SHALL BE CAPABLE OF BEING DISCONNECTED AND REMOVED FROM THE FIXTURE IN THE FIELD. LED COLOR TEMPERATURE SHALL BE COOL WHITE WITH MINIMUM CRI OF 80. DRIVER POWER FACTOR SHALL BE 0.9 LAGGING AT MINIMUM. THE LUMINAIRE SHALL BE UL LISTED FOR CLASS 1 DIVISION 2 LOCATIONS.
FB	LED	EDWARDS SIGNAL: 105XBRMR120A (OR APPROVED EQUAL)	FLASHING LIGHT BEACONS OR ROTATING BEACONS SHALL BE WEATHERPROOF, U. L. LISTED. THE BEACON SHALL BE FURNISHED WITH AN INTEGRAL FLASHING UNIT RATED FOR USE WITH AN LED LAMP, A RED POLYCARBONATE LENS, AND BE FURNISHED COMPLETE WITH THE LED LAMP. THE UNIT SHALL BE RATED FOR AN OPERATING VOLTAGE OF 120VAC. THE WIRING FOR THE HORN OF THE UNIT SHALL BE DISCONNECTED TO DISALLOW OPERATION OF THE HORN. PROVIDE PROTECTIVE LENS GUARD, CATALOG NO. 92-GRD FOR EACH BEACON.
J	LED 3000 LUMENS	HOLOPHANE: HW4G-10C-1000-50K-T3-MVOLT-DF-BZSDP (OR APPROVED EQUAL)	WALL MOUNTED, LED LUMINAIRE. HOUSING AND DOOR FRAME SHALL BE DARK BRONZE OF CORROSION-RESISTANT, DIE-CAST ALUMINUM. HARDWARE SHALL BE OF STAINLESS STEEL FINISH FIXTURE SHALL BE ABLE TO OPERATE IN AN AMBIENT TEMPERATURE RANGE FROM -20°C TO +55°C. TOTAL HARMONIC DISTORTION SHALL BE 20 PERCENT OR LESS DRIVERS AND LED CIRCUIT BOARDS SHALL BE CAPABLE OF BEING DISCONNECTED AND REMOVED FROM THE FIXTURE IN THE FIELD. LED COLOR TEMPERATURE SHALL BE COOL WHITE WITH MINIMUM CRI OF 80. DRIVER POWER FACTOR SHALL BE 0.9 LAGGING AT MINIMUM. THE LUMINAIRE SHALL BE UL LISTED FOR CLASS 1 DIVISION 2 LOCATIONS. COMPLY WITH LIGHTING FIXTURE SCHEDULE NOTE 1.
X	LED	LITHONIA LIGHTING: LZ-S-1-R-ELN-SD (OR APPROVED EQUAL)	STANDARD INTERNAL MOUNTED, SINGLE FACED, LED EXIT SIGN COMPLETE WITH SEALED HEAVY DUTY NICKEL CADMIUM BATTERY AND 120V/277V AS REQUIRED BY CHARGER. HOUSING SHALL BE OF GRAY IMPACT-RESISTANT FIBERGLASS-REINFORCED POLYESTER WITH STAINLESS STEEL HARDWARE AND CLEAR POLYCARBONATE COVER. FIXTURE SHALL HAVE SELF DIAGNOSTIC TESTING FUNCTIONALITY TO PERFORM PERIODIC AND AUTOMATIC SELF TEST OF BATTERY AND CIRCUIT OPERATION. THE SOLID STATE CHARGER SHALL HAVE INTEGRAL TEST SWITCH. THE UNIT SHALL BE UL LISTED AND MEETS THE CURRENT SAFETY CODE NFPA 101, THE NEC, AND OSHA ILLUMINATION STANDARDS. FURNISH WITH ARROW IN DIRECTION AS SHOWN ON PLANS.
Y	(2) LED	EMERGI-LITE: #12HP-M30-2-L10 SERIES (OR APPROVED EQUAL)	WALL MOUNTED 12V TWIN LIGHT, BATTERY EMERGENCY LUMINAIRE. NEMA 4X CABINET SHALL BE CONSTRUCTED OF MOLDED FIBERGLASS WITH ASA 61 GRAY FINISH AND WITH FULLY GASKETED FRONT DOOR. PROVIDE WITH CHORD AND PLUG WHERE SHOWN ON PLANS. COMPLETE UNIT SHALL COME WITH A 3-YEAR FULL WARRANTY. UNIT SHALL BE UL LISTED.

LIGHTING FIXTURE SCHEDULE NOTES:

1. ALTHOUGH IT MAY NOT BE SHOWN ON THE PLANS, THE CONTRACTOR SHALL SIZE, FURNISH, AND INSTALL A DEDICATED JUNCTION BOX, LID, AND MOUNTING HARDWARE FOR EACH TYPE 'B2' LIGHT FIXTURE.

THIS CONFORMED DOCUMENT IS RELEASED FOR THE CONVENIENCE OF THE CONTRACTOR UNDER THE AUTHORITY OF:

K. A. HARUTUNIAN, P.E. — 11-01-22
TX LIC NO. 59181 — DATE

SEE DISCLAIMER FOR LIMITATIONS OF USE.

CONTRACT DOCUMENTS DATED FEBRUARY 28, 2022, AS PART OF THE BIDDING DOCUMENTS (DRAWINGS AND SPECIFICATIONS) AND SUBSEQUENTLY ISSUED ADDENDA HAVE BEEN MERGED INTO ONE CONFORMING SET OF DOCUMENTS FOR THE CONVENIENCE OF THE CONTRACTOR. IF INCONSISTENCIES OR AMBIGUITIES BETWEEN "CONFORMED" DOCUMENTS AND CONTRACT DOCUMENTS ARE FOUND, THE CONTRACT DOCUMENTS SHALL GOVERN.

This document, and the designs incorporated herein, is an instrument of professional service that has been developed, designed and prepared by Harutunian Engineering, Inc., and is not to be used, in whole or in part, for any other project without giving written notice to Harutunian Engineering, Inc.

REV	DATE	BY	DESCRIPTION
			CONFORMED DOCUMENTS

DESIGNED HEI
DRAWN HEI
CHECKED HEI
DATE NOVEMBER 2022

** ORIGINAL SEALED BY K.A. HARUTUNIAN 02-28-22 TX PE 59181 **

HARUTUNIAN ENGINEERING INCORPORATED
ENGINEERING AND ENVIRONMENTAL CONSULTANTS
8100 CROSS PARK DRIVE
AUSTIN, TEXAS 78754
TBPE REGISTRATION NO. F-2408

carollo
TBPELS No. F-882

CITY OF AUSTIN
FOUNDED 1839

CITY OF AUSTIN

CITY OF AUSTIN
WILD HORSE RANCH WWTP EXPANSION
ELECTRICAL
ELECTRICAL TYPICAL DETAILS - 1

VERIFY SCALES
BAR IS ONE INCH ON ORIGINAL DRAWING
0 1"
IF NOT ONE INCH ON THIS SHEET, ADJUST SCALES ACCORDINGLY

JOB NO. 10976A.00
DRAWING NO. 00TE01
SHEET NO. 75 OF 464

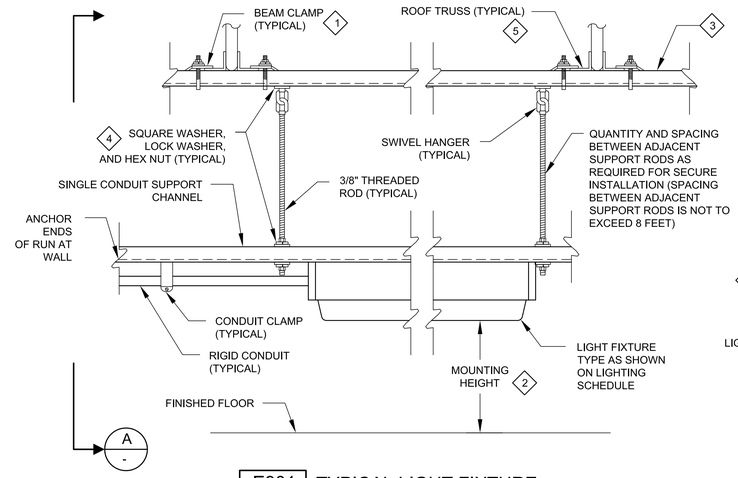

E901 TYP — TYPICAL LIGHT FIXTURE MOUNTING DETAIL

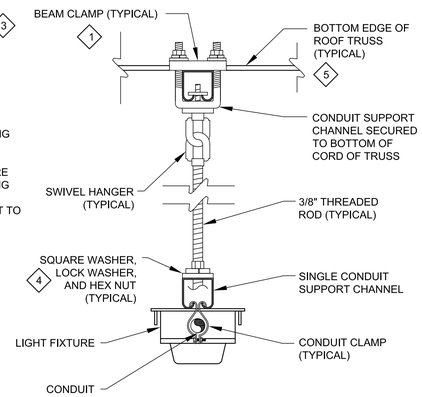

A - SECTION
SCALE: NTS

DETAIL NOTES

1. THE STRUCTURE TYPE TO WHICH EQUIPMENT AND/OR SUPPORT SYSTEMS SHALL BE MOUNTED MAY VARY. THE EQUIPMENT ANCHOR TYPE SHALL CORRESPOND TO THE TYPE OF STRUCTURE TO WHICH THE EQUIPMENT AND/OR SUPPORT SYSTEMS ARE ATTACHED. THE DRAWING REFLECTS A SPECIFIC STRUCTURE TYPE WITH CORRESPONDING ANCHOR TYPE AND IS TYPICAL FOR THE STRUCTURE TYPE SHOWN. TO ATTACH EQUIPMENT/SUPPORT SYSTEMS TO PRE-CAST/CAST-IN-PLACE CONCRETE WALL/FLOOR SLAB STRUCTURE TYPES, FURNISH AND INSTALL BOLT WITH EXPANSION INSERT ANCHOR. TO ATTACH EQUIPMENT/SUPPORT SYSTEMS TO A CONCRETE MASONRY UNIT (CMU)/BRICK WALL STRUCTURE TYPE, FURNISH AND INSTALL BOLT WITH EXPANSION ANCHOR. TO ATTACH EQUIPMENT/SUPPORT SYSTEMS TO STEEL STRUCTURE TYPE, FURNISH AND INSTALL BOLTING ASSEMBLY. COORDINATE ATTACHMENT REQUIREMENTS WITH STRUCTURAL/ARCHITECTURAL AND APPLICABLE DIVISION 5 SPECIFICATION SECTIONS.
2. MOUNTING HEIGHT AS SHOWN ON LIGHTING PLANS.
3. CONDUIT SUPPORT CHANNEL SECURED TO BOTTOM CORD OF ROOF TRUSS (TYPICAL). FURNISH AND INSTALL ALL NECESSARY BOLTS/NUTS/FITTINGS/HARDWARE/ETC., FOR ATTACHMENT TO BUILDING STRUCTURE PER ARCHITECTURAL/STRUCTURAL RECOMMENDATIONS.
4. USE SQUARE WASHER, LOCK WASHER AND HEX NUT HARDWARE ASSEMBLY FOR ALL SUPPORTS SUSPENDED FROM CEILING. LOCATION SHOWN FOR ILLUSTRATION ONLY. TYPICAL FOR ALL POINTS OF CONNECTION ON CEILING SUPPORTS, WHETHER SHOWN HERE OR NOT.
5. ROOF JOIST/TRUSS EXISTING OR PROPOSED AS APPLICABLE. REFER TO STRUCTURAL

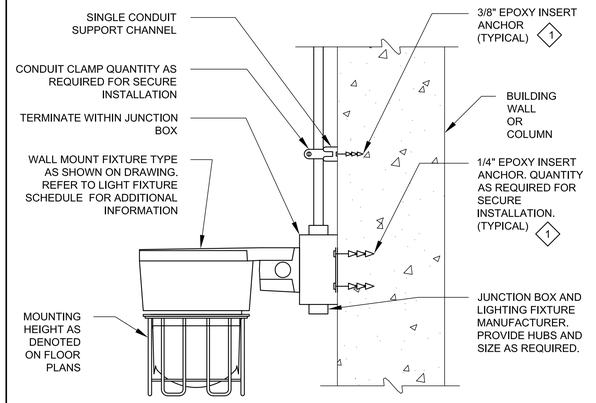

E902 TYP — LIGHT FIXTURE WALL MOUNTING DETAIL

DETAIL NOTES

1. THE STRUCTURE TYPE TO WHICH EQUIPMENT AND/OR SUPPORT SYSTEMS SHALL BE MOUNTED MAY VARY. THE EQUIPMENT ANCHOR TYPE SHALL CORRESPOND TO THE TYPE OF STRUCTURE TO WHICH THE EQUIPMENT AND/OR SUPPORT SYSTEMS ARE ATTACHED. THE DRAWING REFLECTS A SPECIFIC STRUCTURE TYPE WITH CORRESPONDING ANCHOR TYPE AND IS TYPICAL FOR THE STRUCTURE TYPE SHOWN. TO ATTACH EQUIPMENT/SUPPORT SYSTEMS TO PRE-CAST/CAST-IN-PLACE CONCRETE WALL/FLOOR SLAB STRUCTURE TYPES, FURNISH AND INSTALL BOLT WITH EPOXY INSERT ANCHOR. TO ATTACH EQUIPMENT/SUPPORT SYSTEMS TO A CONCRETE MASONRY UNIT (CMU)/BRICK WALL STRUCTURE TYPE, FURNISH AND INSTALL BOLT WITH EXPANSION ANCHOR. TO ATTACH EQUIPMENT/SUPPORT SYSTEMS TO STEEL STRUCTURE TYPE, FURNISH AND INSTALL BOLTING ASSEMBLY. COORDINATE ATTACHMENT REQUIREMENTS WITH STRUCTURAL.

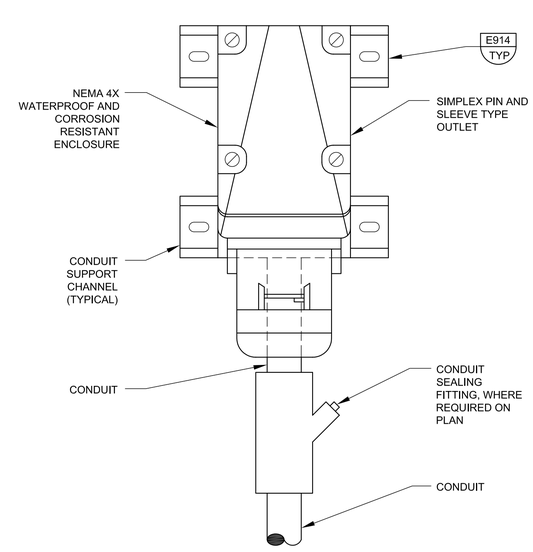

E903 TYP — SURFACE/WALL EXTERIOR MOUNTED SIMPLEX RECEPTACLE DETAIL

DETAIL NOTES

1. GROUND PRONGS SHALL BE ORIENTED VERTICALLY (AS SHOWN HERE), OR TO THE RIGHT FOR HORIZONTAL CONFIGURATION.

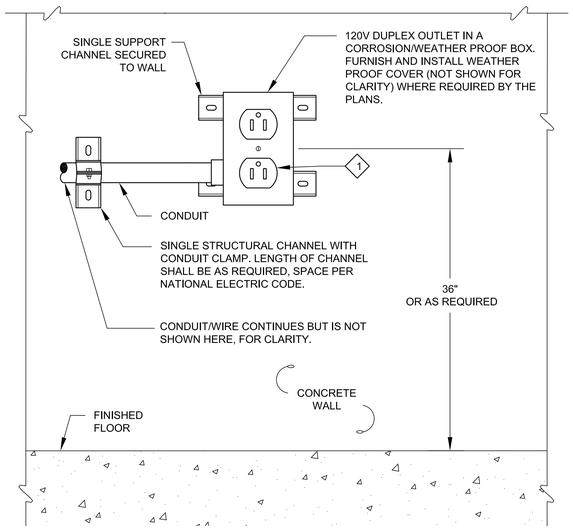

E904 TYP — SURFACE/WALL MOUNTED CONVENIENCE RECEPTACLE DETAIL

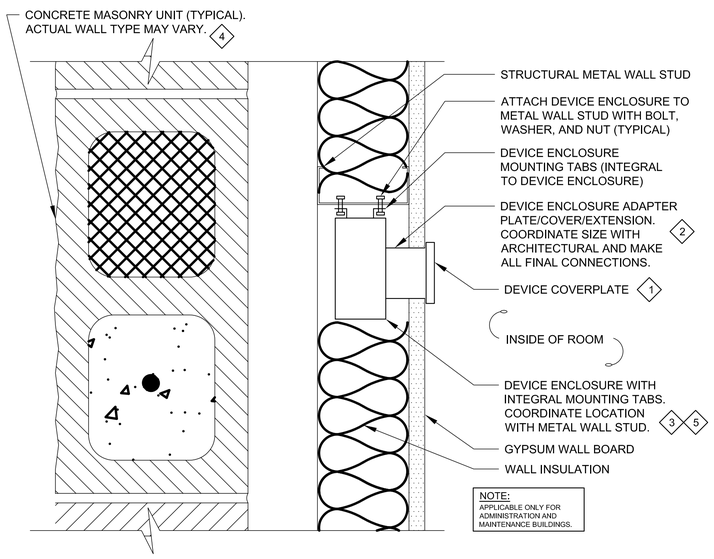

FINISHED GYPSUM WALL BOARD INSTALLATION

E905 TYP — RECESSED DEVICE/RECEPTACLE ENCLOSURE INSTALLATION DETAIL

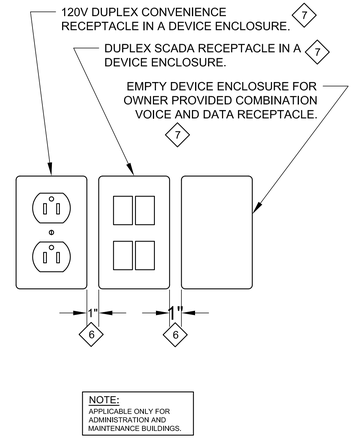

TYPICAL FRONT ELEVATION OF DEVICE ENCLOSURES

DETAIL NOTES

1. CLOSELY AND CAREFULLY COORDINATE WITH ARCHITECTURAL TO MOUNT BACK OF COVERPLATE FLUSH TO WALL FACE AND MAKE ALL FINAL CONNECTIONS.
2. FURNISH AND INSTALL DEVICE MOUNTING ATTACHMENT OF SUFFICIENT LENGTH TO MOUNT FLUSH WITH DRY WALL. CLOSELY AND CAREFULLY COORDINATE LENGTH/SIZE/LOCATION OF DEVICE MOUNTING ATTACHMENT WITH ACTUAL DEVICE ENCLOSURE LOCATION, ARCHITECTURAL, AND MAKE ALL FINAL CONNECTIONS.
3. FURNISH AND INSTALL DEVICE ENCLOSURE TO STUD LOCATED IMMEDIATELY ADJACENT TO THE LOCATION OF THE DEVICE SHOWN ON PLANS.
4. CMU WALL TYPE IS SHOWN HERE FOR CLARITY. ACTUAL PROPOSED WALL TYPE MAY VARY BY ROOM AND LOCATION OF DEVICE ENCLOSURE.
5. PROPOSED CONDUIT/WIRE AND RELATED HARDWARE CONNECTING TO THE DEVICE ENCLOSURE AND ITEMS CONTAINED INSIDE OF THE ENCLOSURE ARE NOT SHOWN HERE FOR CLARITY. CLOSELY AND CAREFULLY COORDINATE LOCATION OF DEVICE ENCLOSURE IN WALL WITH ROUTE OF PROPOSED INTERCONNECT CONDUIT/WIRE AND WITH DEVICE ENCLOSURE MOUNTING COVER/EXTENSION REQUIREMENTS AND MAKE ALL FINAL CONNECTIONS.
6. MOUNT DEVICE ENCLOSURES SEPARATE FROM AND ADJACENT TO ONE ANOTHER. DO NOT GANG MOUNT DEVICE ENCLOSURES CORRESPONDING TO DIFFERENT SUBSYSTEMS, I.E. CONVENIENCE RECEPTACLES, SCADA RECEPTACLES, OWNER'S COMBINATION VOICE AND DATA RECEPTACLE. CERTAIN WALL TYPES (CMU, ETC.) MAY REQUIRE ADDITIONAL SPACING BETWEEN ADJACENT DEVICE ENCLOSURES.
7. NUMBER/ORIENTATION OF DEVICE ENCLOSURES MAY VARY. REFER TO THE PLANS.

THIS CONFORMED DOCUMENT IS RELEASED FOR THE CONVENIENCE OF THE CONTRACTOR UNDER THE AUTHORITY OF:

K. A. Harutunian — 11-01-22

K. A. HARUTUNIAN, P.E. — DATE
TX LIC NO. 59181

SEE DISCLAIMER FOR LIMITATIONS OF USE.

CONTRACT DOCUMENTS DATED FEBRUARY 28, 2022, AS PART OF THE BIDDING DOCUMENTS (DRAWINGS AND SPECIFICATIONS) AND SUBSEQUENTLY ISSUED ADDENDA HAVE BEEN MERGED INTO ONE CONFORMING SET OF DOCUMENTS FOR THE CONVENIENCE OF THE CONTRACTOR. IF INCONSISTENCIES OR AMBIGUITIES BETWEEN "CONFORMED" DOCUMENTS AND CONTRACT DOCUMENTS ARE FOUND, THE CONTRACT DOCUMENTS SHALL GOVERN.

This document, and the designs incorporated herein, is an instrument of professional service that has been developed, designed and prepared by Harutunian Engineering, Inc., and is not to be used, in whole or in part, for any other project without giving written notice to Harutunian Engineering, Inc.

REV	DATE	BY	DESCRIPTION

CONFORMED DOCUMENTS

DESIGNED HEI | DRAWN HEI | CHECKED HEI | DATE NOVEMBER 2022

** ORIGINAL SEALED BY K.A. HARUTUNIAN 02-28-22 TX PE 59181 **

HARUTUNIAN ENGINEERING INCORPORATED
ENGINEERING AND ENVIRONMENTAL CONSULTANTS
8100 CROSS PARK DRIVE
AUSTIN, TEXAS 78754
TBPE REGISTRATION NO. F-2408

carollo
TBPELS No. F-882

CITY OF AUSTIN
FOUNDED 1839
CITY OF AUSTIN

CITY OF AUSTIN

WILD HORSE RANCH WWTP EXPANSION

ELECTRICAL

ELECTRICAL TYPICAL DETAILS - 2

VERIFY SCALES
BAR IS ONE INCH ON ORIGINAL DRAWING
0 — 1"
IF NOT ONE INCH ON THIS SHEET, ADJUST SCALES ACCORDINGLY

JOB NO. 10976A.00
DRAWING NO. 00TE02
SHEET NO. 76 OF 464

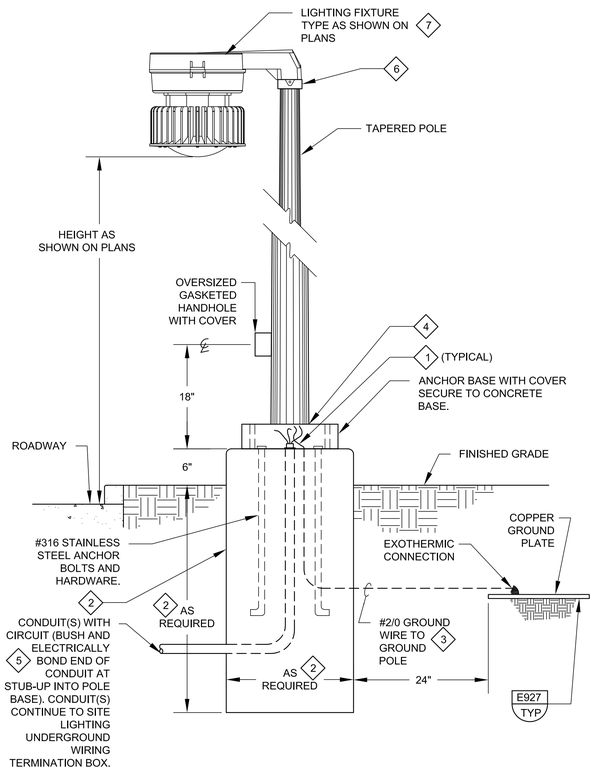

DETAIL NOTES

1. EXTEND CIRCUITING THROUGH THE BASE AND POLE TO THE LIGHT FIXTURE AND TERMINATE WIRING INSIDE OF FIXTURE.
2. FURNISH AND INSTALL DEDICATED FOUNDATION FOR EACH POLE. REFER TO STRUCTURAL DRAWINGS FOR FOUNDATION REQUIREMENTS.
3. ROUTE IN 1" CONDUIT (NOT SHOWN) TO GROUND POLE.
4. POLE OUTSIDE DIAMETER AT BASE SHALL BE MINIMUM OF 5 INCHES. CONTRACTOR TO COORDINATE POLE SIZE WITH THE MANUFACTURER.
5. THE PORTION OF CONDUIT ROUTED BETWEEN THE UNDERGROUND WIRING TERMINATION BOX AND THE POLE MOUNTED FIXTURE SHALL BE SIZED 1-1/2" EVEN THOUGH THE PANEL SCHEDULES MAY INDICATE OTHERWISE FOR THE SITE LIGHTING BRANCH CIRCUITS.
6. ADAPTER HUB TO FACILITATE 1-1/2" STANCHION MOUNT TO 4" DIAMETER POLE.
7. REFER TO LIGHTING PLAN AND FIXTURE SCHEDULE FOR ADDITIONAL INFORMATION.

E906 TYP TYPICAL POLE MOUNTED FIXTURE MOUNTING DETAIL

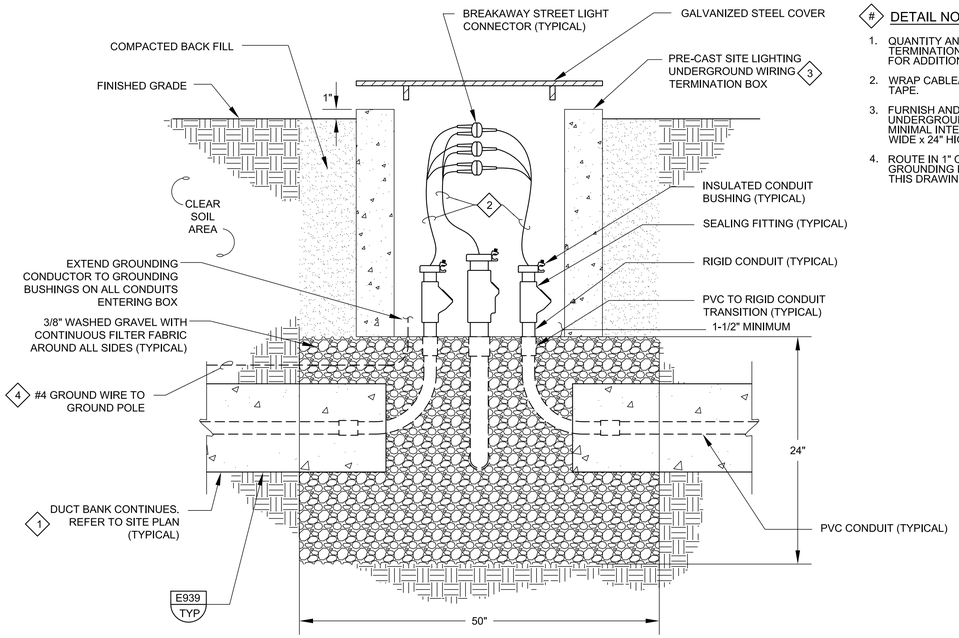

E907 TYP SITE LIGHTING UNDERGROUND WIRING TERMINATION BOX INSTALLATION DETAIL

DETAIL NOTES

1. QUANTITY AND LOCATION OF CONDUIT ENTERING TERMINATION BOX MAY VARY, REFER TO SITE PLANS FOR ADDITIONAL INFORMATION.
2. WRAP CABLE/WIRE WITH ARC AND FIREPROOFING TAPE.
3. FURNISH AND INSTALL PRE-CAST SITE LIGHTING UNDERGROUND WIRING TERMINATION BOX WITH MINIMAL INTERIOR DIMENSIONS OF 18" LONG x 18" WIDE x 24" HIGH AND WALL THICKNESS OF 4".
4. ROUTE IN 1" CONDUIT (NOT SHOWN) TO LIGHT POLE GROUNDING ELECTRODE. REFER TO DETAIL NO. 1 ON THIS DRAWING.

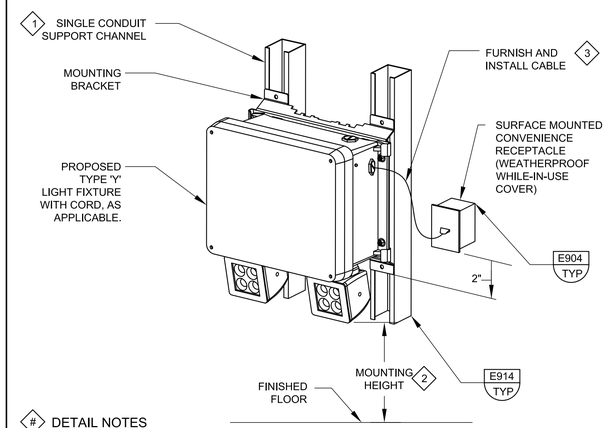

DETAIL NOTES

1. THE STRUCTURE TYPE TO WHICH EQUIPMENT AND/OR SUPPORT SYSTEMS SHALL BE MOUNTED MAY VARY. THE EQUIPMENT ANCHOR TYPE SHALL CORRESPOND TO THE TYPE OF STRUCTURE TO WHICH THE EQUIPMENT AND/OR SUPPORT SYSTEMS ARE ATTACHED. THE DRAWING REFLECTS A SPECIFIC STRUCTURE TYPE WITH CORRESPONDING ANCHOR TYPE AND IS TYPICAL FOR THE STRUCTURE TYPE SHOWN. TO ATTACH EQUIPMENT/SUPPORT SYSTEMS TO PRE-CAST/CAST-IN-PLACE CONCRETE WALL/FLOOR SLAB STRUCTURE TYPES, FURNISH AND INSTALL BOLT WITH EXPANSION INSERT ANCHOR. TO ATTACH EQUIPMENT/SUPPORT SYSTEMS TO A CONCRETE MASONRY UNIT (CMU)/BRICK WALL STRUCTURE TYPE, FURNISH AND INSTALL BOLT WITH EXPANSION ANCHOR. TO ATTACH EQUIPMENT/SUPPORT SYSTEMS TO STEEL STRUCTURE TYPE, FURNISH AND INSTALL BOLTING ASSEMBLY. COORDINATE ATTACHMENT REQUIREMENTS WITH STRUCTURAL AND SPECIFICATIONS.
2. MOUNTING HEIGHT AS SHOWN ON LIGHTING PLANS.
3. WHERE SHOWN ON PLANS, FURNISH AND INSTALL 3-CONDUCTOR #16 TYPE SO MULTI-CONDUCTOR CABLE BETWEEN RECEPTACLE AND LIGHT FIXTURE. FURNISH AND INSTALL CORD/CABLE FITTING (NOT SHOWN) TO TERMINATE CABLE TO FIXTURE. FURNISH AND INSTALL 1P-20A NEMA PLUG TO TERMINATE CABLE TO RECEPTACLE.

E908 TYP LIGHTING FIXTURE TYPE "Y" EMERGENCY LIGHTING MOUNTING DETAIL

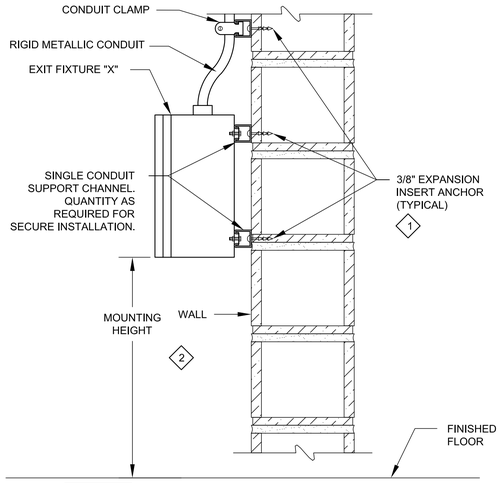

E909 TYP TYPICAL LIGHT FIXTURE MOUNTING SUPPORT STRUCTURE DETAIL

DETAIL NOTES

1. THE STRUCTURE TYPE TO WHICH EQUIPMENT AND/OR SUPPORT SYSTEMS SHALL BE MOUNTED MAY VARY. THE EQUIPMENT ANCHOR TYPE SHALL CORRESPOND TO THE TYPE OF STRUCTURE TO WHICH THE EQUIPMENT AND/OR SUPPORT SYSTEMS ARE ATTACHED. THE DRAWING REFLECTS A SPECIFIC STRUCTURE TYPE WITH CORRESPONDING ANCHOR TYPE AND IS TYPICAL FOR THE STRUCTURE TYPE SHOWN. TO ATTACH EQUIPMENT/SUPPORT SYSTEMS TO PRE-CAST/CAST-IN-PLACE CONCRETE WALL/FLOOR SLAB STRUCTURE TYPES, FURNISH AND INSTALL BOLT WITH EXPANSION INSERT ANCHOR. TO ATTACH EQUIPMENT/SUPPORT SYSTEMS TO A CONCRETE MASONRY UNIT (CMU)/BRICK WALL STRUCTURE TYPE, FURNISH AND INSTALL BOLT WITH EXPANSION ANCHOR. TO ATTACH EQUIPMENT/SUPPORT SYSTEMS TO STEEL STRUCTURE TYPE, FURNISH AND INSTALL BOLTING ASSEMBLY. COORDINATE ATTACHMENT REQUIREMENTS WITH STRUCTURAL/ARCHITECTURAL AND APPLICABLE DIVISION 5 SPECIFICATION SECTIONS.
2. MOUNTING HEIGHT AS SHOWN ON LIGHTING PLANS.

THIS CONFORMED DOCUMENT IS RELEASED FOR THE CONVENIENCE OF THE CONTRACTOR UNDER THE AUTHORITY OF:

K. A. Harutunian — 11-01-22

K. A. HARUTUNIAN, P.E. — DATE
TX LIC NO. 59181

SEE DISCLAIMER FOR LIMITATIONS OF USE.

CONTRACT DOCUMENTS DATED FEBRUARY 28, 2022, AS PART OF THE BIDDING DOCUMENTS (DRAWINGS AND SPECIFICATIONS) AND SUBSEQUENTLY ISSUED ADDENDA HAVE BEEN MERGED INTO ONE CONFORMING SET OF DOCUMENTS FOR THE CONVENIENCE OF THE CONTRACTOR. IF INCONSISTENCIES OR AMBIGUITIES BETWEEN "CONFORMED" DOCUMENTS AND CONTRACT DOCUMENTS ARE FOUND, THE CONTRACT DOCUMENTS SHALL GOVERN.

This document, and the designs incorporated herein, is an instrument of professional service that has been developed, designed and prepared by Harutunian Engineering, Inc., and is not to be used, in whole or in part, for any other project without giving written notice to Harutunian Engineering, Inc.

REV	DATE	BY	DESCRIPTION
			CONFORMED DOCUMENTS

DESIGNED HEI
DRAWN HEI
CHECKED HEI
DATE NOVEMBER 2022

** ORIGINAL SEALED BY K.A. HARUTUNIAN 02-28-22 TX PE 59181 **

HARUTUNIAN ENGINEERING INCORPORATED
ENGINEERING AND ENVIRONMENTAL CONSULTANTS
8100 CROSS PARK DRIVE
AUSTIN, TEXAS 78754
TBPE REGISTRATION NO. F-2408

carollo
TBPELS No. F-882

CITY OF AUSTIN

CITY OF AUSTIN
WILD HORSE RANCH WWTP EXPANSION
ELECTRICAL
ELECTRICAL TYPICAL DETAILS - 3

VERIFY SCALES
BAR IS ONE INCH ON ORIGINAL DRAWING
0 1"
IF NOT ONE INCH ON THIS SHEET, ADJUST SCALES ACCORDINGLY

JOB NO. 10976A.00
DRAWING NO. 00TE03
SHEET NO. 77 OF 464

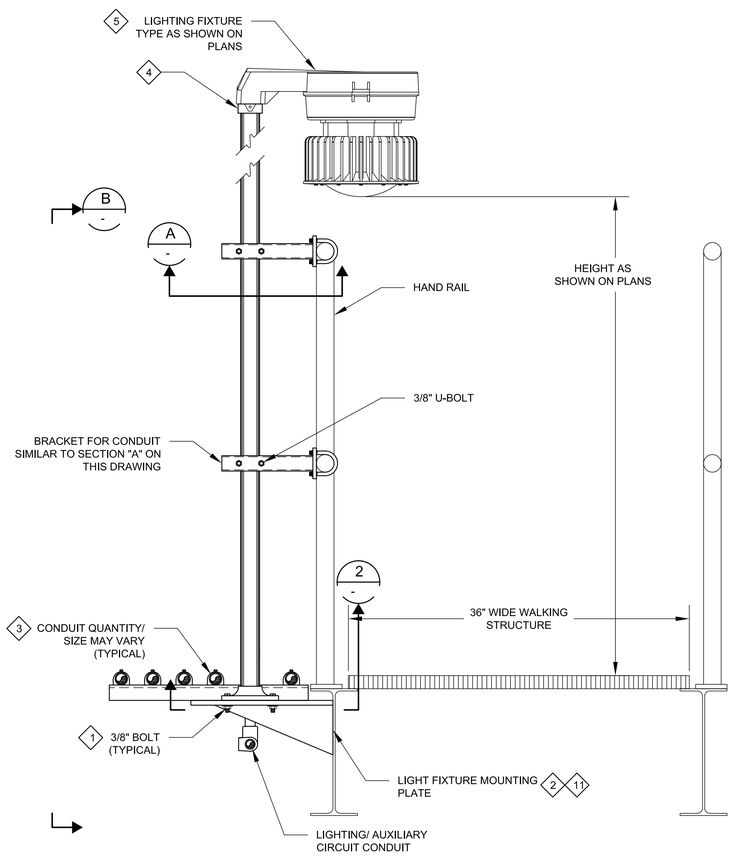

E910 TYP — CLARIFIER LIGHTING FIXTURE MOUNTING DETAIL

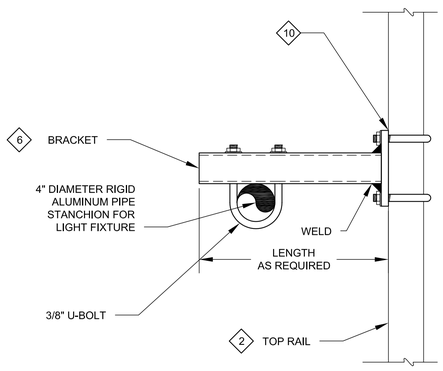

VIEW BELOW-AT TOP RAIL

A - SECTION A
SCALE: NTS

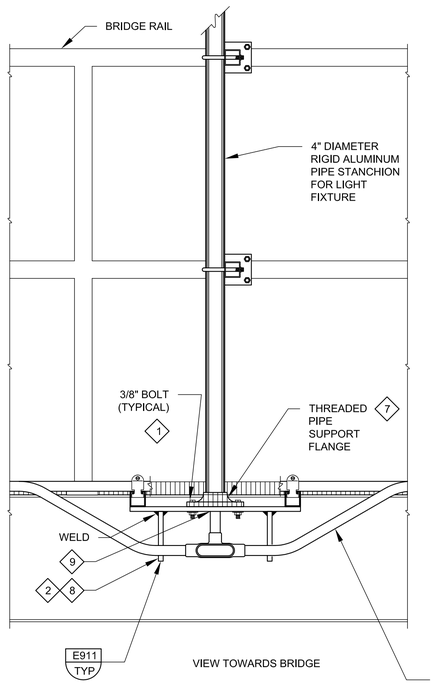

B - MOUNTING PLATE DETAIL FOR LIGHTING FIXTURE
SCALE: NTS

FOR PURPOSE OF CLARITY OTHER CONDUITS ARE NOT SHOWN

DETAIL NOTES

1. FASTEN/SECURE THREADED PIPE SUPPORT FLANGE TO LIGHT FIXTURE MOUNTING PLATE.
2. FOR THE SECONDARY CLARIFIERS MOUNTING BRACKET IS FURNISHED AND INSTALLED BY CLARIFIER MANUFACTURER. FOR THE PRIMARY CLARIFIERS MOUNTING BRACKET IS FURNISHED AND INSTALLED BY THE CONTRACTOR.
3. FURNISH AND INSTALL PROPOSED CONDUIT/WIRE/MOUNTING HARDWARE ASSEMBLY AND NECESSARY MOUNTING CHANNEL AND RELATED HARDWARE TO SECURE CONDUIT/CHANNEL TO ACCESS BRIDGE RACKING FURNISHED AND INSTALLED BY CLARIFIER MANUFACTURER.
4. ADAPTER HUB TO FACILITATE 1-1/2" STANCHION MOUNT TO 4" DIAMETER POLE.
5. REFER TO LIGHTING PLAN AND FIXTURE SCHEDULE FOR ADDITIONAL INFORMATION.
6. #304 STAINLESS STEEL BRACKET. CUT TO LENGTH REQUIRED.
7. #304 STAINLESS STEEL THREADED PIPE FLANGE.
8. COORDINATE LIGHT FIXTURE MOUNTING PLATE REQUIREMENTS AND LIGHT FIXTURE MOUNTING PLATE LOCATIONS ALONG CLARIFIER BRIDGE WITH CLARIFIER MANUFACTURER.
9. SEAL ANNULAR SPACE AROUND CONDUIT ENTRY THROUGH SUPPORT FLANGE.
10. SECURE BRACKET/ASSEMBLY TO TOP RAIL WITH U-BOLTS AND SADDLES.
11. MOUNTING BRACKET WELDED TO CLARIFIER WALKWAY SUPPORT.

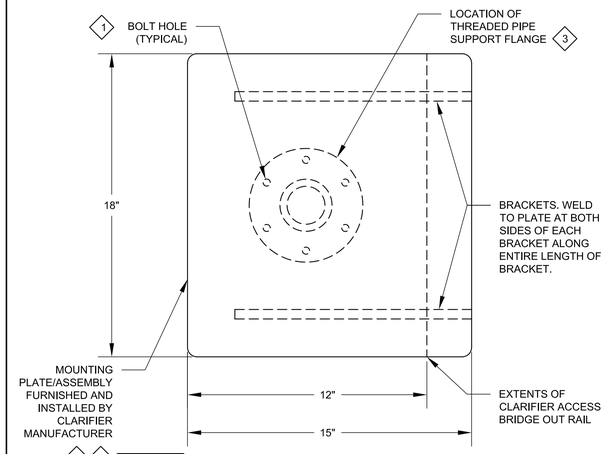

E911 TYP — LIGHTING FIXTURE MOUNTING PLATE ENLARGED DETAIL

DETAIL NOTES

1. THE STRUCTURE TYPE TO WHICH EQUIPMENT AND/OR SUPPORT SYSTEMS SHALL BE MOUNTED MAY VARY. THE EQUIPMENT ANCHOR TYPE SHALL CORRESPOND TO THE TYPE OF STRUCTURE TO WHICH THE EQUIPMENT AND/OR SUPPORT SYSTEMS ARE ATTACHED. THE DRAWING REFLECTS A SPECIFIC STRUCTURE TYPE WITH CORRESPONDING ANCHOR TYPE AND IS TYPICAL FOR THE STRUCTURE TYPE SHOWN. TO ATTACH EQUIPMENT/SUPPORT SYSTEMS TO PRE-CAST/CAST-IN-PLACE CONCRETE WALL/FLOOR SLAB STRUCTURE TYPES, FURNISH AND INSTALL BOLT WITH EXPANSION INSERT ANCHOR. TO ATTACH EQUIPMENT/SUPPORT SYSTEMS TO A CONCRETE MASONRY UNIT (CMU)/BRICK WALL STRUCTURE TYPE, FURNISH AND INSTALL BOLT WITH EXPANSION ANCHOR. TO ATTACH EQUIPMENT/SUPPORT SYSTEMS TO STEEL STRUCTURE TYPE, FURNISH AND INSTALL BOLTING ASSEMBLY. COORDINATE ATTACHMENT REQUIREMENTS WITH STRUCTURAL/ARCHITECTURAL AND APPLICABLE DIVISION 5 SPECIFICATION SECTIONS.
2. MOUNTING HEIGHT AS SHOWN ON LIGHTING PLANS.
3. COORDINATE LIGHT FIXTURE MOUNTING PLATE REQUIREMENTS AND LIGHT FIXTURE MOUNTING PLATE LOCATIONS ALONG CLARIFIER BRIDGE WITH CLARIFIER MANUFACTURER.

THIS CONFORMED DOCUMENT IS RELEASED FOR THE CONVENIENCE OF THE CONTRACTOR UNDER THE AUTHORITY OF:

K. A. Harutunian — 11-01-22

K. A. HARUTUNIAN, P.E. — DATE
TX LIC NO. 59181

SEE DISCLAIMER FOR LIMITATIONS OF USE.

CONTRACT DOCUMENTS DATED FEBRUARY 28, 2022, AS PART OF THE BIDDING DOCUMENTS (DRAWINGS AND SPECIFICATIONS) AND SUBSEQUENTLY ISSUED ADDENDA HAVE BEEN MERGED INTO ONE CONFORMING SET OF DOCUMENTS FOR THE CONVENIENCE OF THE CONTRACTOR. IF INCONSISTENCIES OR AMBIGUITIES BETWEEN "CONFORMED" DOCUMENTS AND CONTRACT DOCUMENTS ARE FOUND, THE CONTRACT DOCUMENTS SHALL GOVERN.

This document, and the designs incorporated herein, is an instrument of professional service that has been developed, designed and prepared by Harutunian Engineering, Inc., and is not to be used, in whole or in part, for any other project without giving written notice to Harutunian Engineering, Inc.

REV	DATE	BY	DESCRIPTION
			CONFORMED DOCUMENTS

DESIGNED HEI
DRAWN HEI
CHECKED HEI
DATE NOVEMBER 2022

** ORIGINAL SEALED BY K.A. HARUTUNIAN 02-28-22 TX PE 59181 **

HARUTUNIAN ENGINEERING INCORPORATED
ENGINEERING AND ENVIRONMENTAL CONSULTANTS
8100 CROSS PARK DRIVE
AUSTIN, TEXAS 78754
TBPE REGISTRATION NO. F-2408

carollo
TBPELS No. F-882

CITY OF AUSTIN
FOUNDED 1839
CITY OF AUSTIN

CITY OF AUSTIN
WILD HORSE RANCH WWTP EXPANSION
ELECTRICAL
ELECTRICAL TYPICAL DETAILS - 4

VERIFY SCALES
BAR IS ONE INCH ON ORIGINAL DRAWING
0 1"
IF NOT ONE INCH ON THIS SHEET, ADJUST SCALES ACCORDINGLY

JOB NO. 10976A.00
DRAWING NO. 00TE04
SHEET NO. 78 OF 464

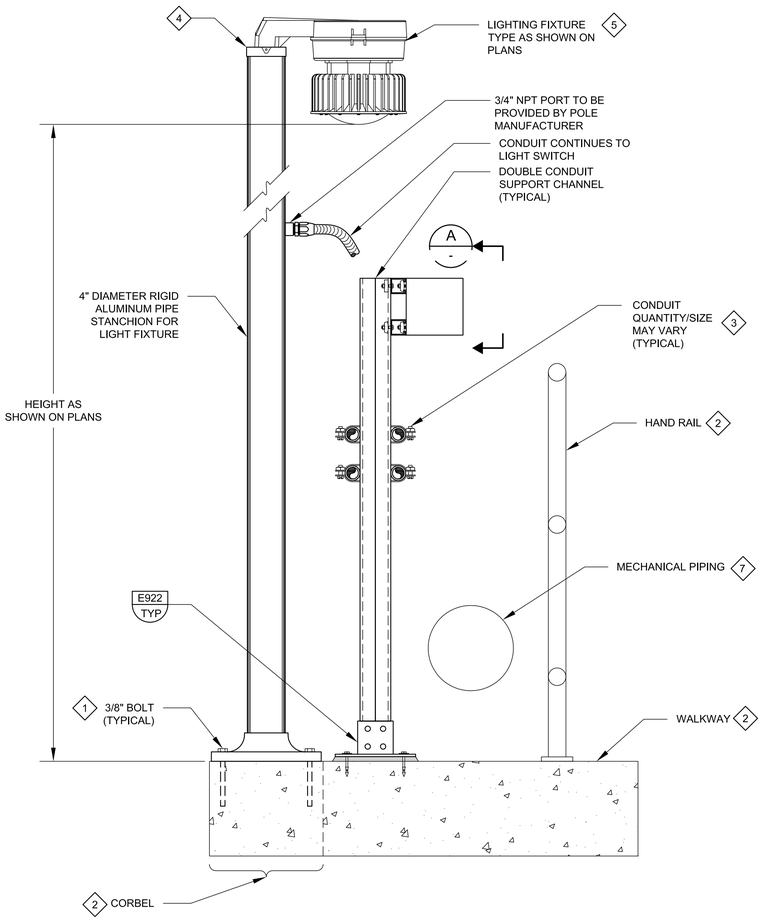

E912 TYP — AERATION BASIN LIGHTING FIXTURE MOUNTING DETAIL

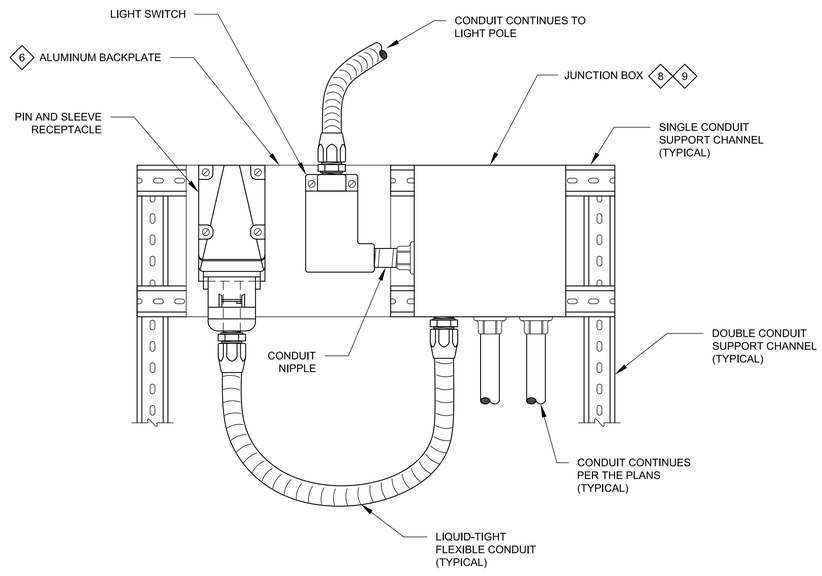

A - MOUNTING PLATE DETAIL FOR LIGHTING FIXTURE
SCALE: NTS

FOR PURPOSE OF CLARITY OTHER CONDUITS ARE NOT SHOWN

DETAIL NOTES

1. SECURE THREADED PIPE SUPPORT FLANGE.
2. REFER TO STRUCTURAL FOR ADDITIONAL INFORMATION.
3. FURNISH AND INSTALL PROPOSED CONDUIT/WIRE/MOUNTING HARDWARE ASSEMBLY AND NECESSARY MOUNTING CHANNEL AND RELATED HARDWARE TO SECURE CONDUIT/CHANNEL TO STRUCTURE/WALKWAY HANDRAIL.
4. ADAPTER HUB TO FACILITATE 1-1/2" STANCHION MOUNT TO 4" DIAMETER POLE.
5. REFER TO LIGHTING PLAN AND FIXTURE SCHEDULE FOR ADDITIONAL INFORMATION.
6. SECURE LIGHT SWITCH/RECEPTACLE TO 1/4" THICK ALUMINUM BACKPLATE.
7. MECHANICAL PIPING LOCATIONS MAY VARY, COORDINATE WITH MECHANICAL AND ADJUST SUPPORT RACK ACCORDINGLY.
8. SPLICE AUXILIARY CIRCUIT WIRING IN JUNCTION BOX USING MULTI-CABLE CONNECTOR BLOCKS.
9. FURNISH AND INSTALL JUNCTION BOX WHERE SHOWN ON THE PLANS. JUNCTION BOX MINIMALLY SIZED 8"H x 8"W x 6"D.

THIS CONFORMED DOCUMENT IS RELEASED FOR THE CONVENIENCE OF THE CONTRACTOR UNDER THE AUTHORITY OF:

K. A. Harutunian — 11-01-22

K. A. HARUTUNIAN, P.E. — DATE
TX LIC NO. 59181

SEE DISCLAIMER FOR LIMITATIONS OF USE.

CONTRACT DOCUMENTS DATED FEBRUARY 28, 2022, AS PART OF THE BIDDING DOCUMENTS (DRAWINGS AND SPECIFICATIONS) AND SUBSEQUENTLY ISSUED ADDENDA HAVE BEEN MERGED INTO ONE CONFORMING SET OF DOCUMENTS FOR THE CONVENIENCE OF THE CONTRACTOR. IF INCONSISTENCIES OR AMBIGUITIES BETWEEN "CONFORMED" DOCUMENTS AND CONTRACT DOCUMENTS ARE FOUND, THE CONTRACT DOCUMENTS SHALL GOVERN.

This document, and the designs incorporated herein, is an instrument of professional service that has been developed, designed and prepared by Harutunian Engineering, Inc., and is not to be used, in whole or in part, for any other project without giving written notice to Harutunian Engineering, Inc.

REV	DATE	BY	DESCRIPTION
			CONFORMED DOCUMENTS

DESIGNED HEI
DRAWN HEI
CHECKED HEI
DATE NOVEMBER 2022

** ORIGINAL SEALED BY K.A. HARUTUNIAN 02-28-22 TX PE 59181 **

HARUTUNIAN ENGINEERING INCORPORATED
ENGINEERING AND ENVIRONMENTAL CONSULTANTS
8100 CROSS PARK DRIVE
AUSTIN, TEXAS 78754
TBPE REGISTRATION NO. F-2408

carollo
TBPELS No. F-882

CITY OF AUSTIN
FOUNDED 1839

CITY OF AUSTIN

WILD HORSE RANCH WWTP EXPANSION

ELECTRICAL

ELECTRICAL TYPICAL DETAILS - 5

VERIFY SCALES
BAR IS ONE INCH ON ORIGINAL DRAWING
0 1"
IF NOT ONE INCH ON THIS SHEET, ADJUST SCALES ACCORDINGLY

JOB NO. 10976A.00
DRAWING NO. 00TE05
SHEET NO. 79 OF 464

DETAIL NOTES

1. SINGLE SUPPORT CHANNEL. THE LENGTH OF CHANNEL SHALL BE AS REQUIRED.
2. THE STRUCTURE TYPE TO WHICH EQUIPMENT AND/OR SUPPORT SYSTEMS SHALL BE MOUNTED MAY VARY. THE EQUIPMENT ANCHOR TYPE SHALL CORRESPOND TO THE TYPE OF STRUCTURE TO WHICH EQUIPMENT AND/OR SUPPORT SYSTEMS ARE ATTACHED. THE DRAWING REFLECTS A SPECIFIC STRUCTURE TYPE WITH CORRESPONDING ANCHOR TYPE AND IS TYPICAL FOR STRUCTURE TYPE SHOWN. TO ATTACH EQUIPMENT/SUPPORT SYSTEMS TO PRE-CAST/CAST-IN-PLACE CONCRETE WALL/FLOOR SLAB STRUCTURE TYPES, FURNISH AND INSTALL BOLT WITH EXPANSION ANCHOR. TO ATTACH EQUIPMENT/SUPPORT SYSTEMS TO CONCRETE MASONRY UNIT (CMU)/BRICK WALL STRUCTURE TYPE, FURNISH AND INSTALL BOLT WITH EXPANSION ANCHOR. TO ATTACH EQUIPMENT/SUPPORT SYSTEMS TO STEEL STRUCTURE TYPE, FURNISH AND INSTALL BOLTING ASSEMBLY. COORDINATE ATTACHMENT REQUIREMENTS WITH STRUCTURAL/ARCHITECTURAL/METAL BUILDING SYSTEM MANUFACTURER AS APPLICABLE.

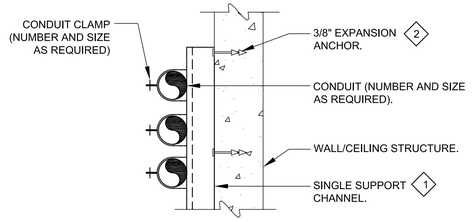

E914 TYP — WALL/CEILING/FLOOR CONDUIT SUPPORT DETAIL

DETAIL NOTES

1. SUPPORT POST BASE FROM STRUCTURE SIMILAR TO DETAIL E922/[00TE07].
2. THE LENGTH OF CHANNEL SHALL BE AS REQUIRED.
3. COORDINATE/CALCULATE TOTAL WEIGHT LOAD OF CONDUIT/WIRE/CABLESETC. AT EACH LOCATION OF SUPPORT. FURNISH AND INSTALL ADDITIONAL SUPPORT AS NECESSARY AT EACH LOCATION, IN ORDER TO MAINTAIN A MAXIMUM OF 50 PERCENT OF MANUFACTURER'S STATED WEIGHT SUPPORT CAPACITY.

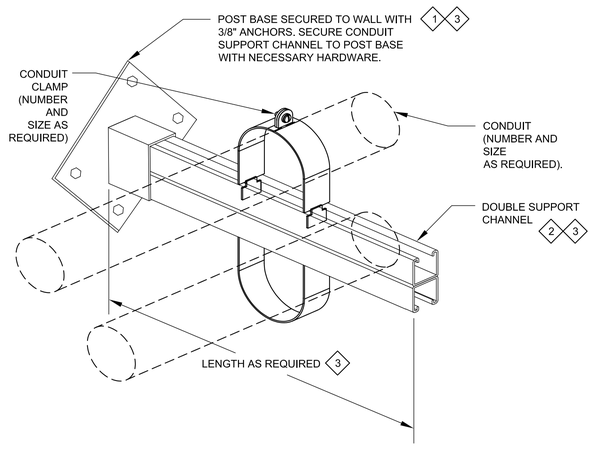

E915 TYP — WALL/FLOOR CONDUIT SUPPORT DETAIL

DETAIL NOTES

1. THE STRUCTURE TYPE TO WHICH EQUIPMENT AND/OR SUPPORT SYSTEMS SHALL BE MOUNTED MAY VARY. THE EQUIPMENT ANCHOR TYPE SHALL CORRESPOND TO THE TYPE OF STRUCTURE TO WHICH EQUIPMENT AND/OR SUPPORT SYSTEMS ARE ATTACHED. THE DRAWING REFLECTS A SPECIFIC STRUCTURE TYPE WITH CORRESPONDING ANCHOR TYPE AND IS TYPICAL FOR STRUCTURE TYPE SHOWN. TO ATTACH EQUIPMENT/SUPPORT SYSTEMS TO PRE-CAST/CAST-IN-PLACE CONCRETE WALL/FLOOR SLAB STRUCTURE TYPES, FURNISH AND INSTALL BOLT WITH EXPANSION ANCHOR. TO ATTACH EQUIPMENT/SUPPORT SYSTEMS TO CONCRETE MASONRY UNIT (CMU)/BRICK WALL STRUCTURE TYPE, FURNISH AND INSTALL BOLT WITH EXPANSION ANCHOR. TO ATTACH EQUIPMENT/SUPPORT SYSTEMS TO STEEL STRUCTURE TYPE, FURNISH AND INSTALL BOLTING ASSEMBLY. COORDINATE ATTACHMENT REQUIREMENTS WITH STRUCTURAL/ARCHITECTURAL/METAL BUILDING SYSTEM MANUFACTURER AS APPLICABLE.
2. COORDINATE/CALCULATE TOTAL WEIGHT LOAD OF CONDUIT/WIRE/CABLES/ETC. AT EACH LOCATION OF SUPPORT. FURNISH AND INSTALL ADDITIONAL SUPPORT AS NECESSARY AT EACH LOCATION, IN ORDER TO MAINTAIN A MAXIMUM OF 50 PERCENT OF MANUFACTURER'S STATED WEIGHT SUPPORT CAPACITY.
3. MAINTAIN MAXIMUM DISTANCE BETWEEN ADJACENT THREADED SUPPORT RODS OF 4'-0".
4. COORDINATE SUPPORT ROD LENGTH (AND CORRESPONDING CONDUIT/WIRE SUPPORT/RACK ELEVATION) WITH PLANS. SUPPORT ROD LENGTH MAY VARY.

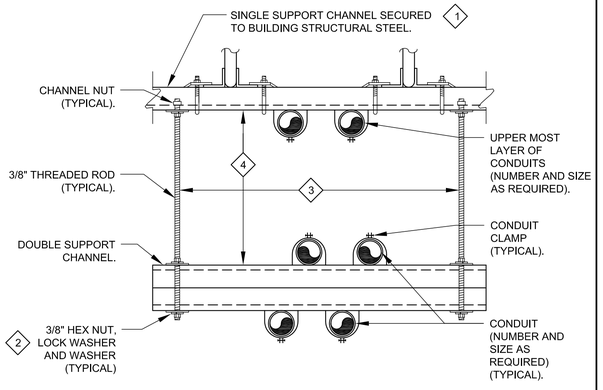

E916 TYP — CONDUIT SUPPORT CEILING DETAIL

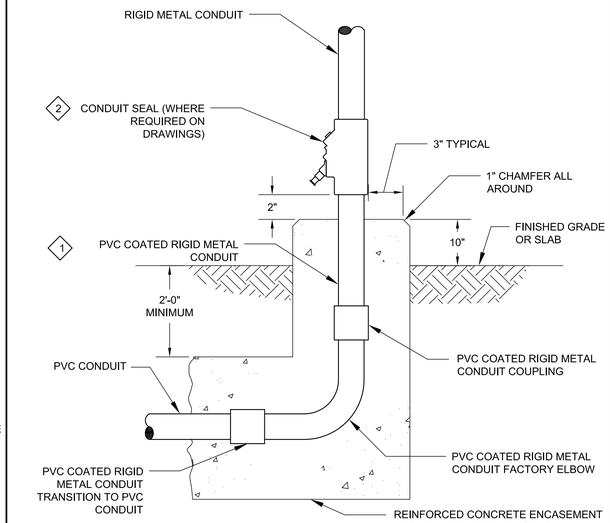

DETAIL NOTES

1. ALTHOUGH SHOWN EXPOSED AND REQUIRED OTHERWISE BY THE SPECIFICATIONS, FURNISH AND INSTALL PER THE REQUIREMENTS OF THE "UNDERGROUND CONDUIT IN DUCT BANK SYSTEM" SUBSECTION OF SECTION 16150 OF THE CONTRACT SPECIFICATIONS.
2. FURNISH AND INSTALL CONDUIT SEALING FITTING WHERE SHOWN ON PLANS. OTHERWISE FURNISH AND INSTALL PVC COATED CONDUIT TO RIGID METAL CONDUIT TRANSITION, REFER TO KEYNOTE 4 ON THIS DRAWING FOR ADDITIONAL INFORMATION. THOROUGHLY COAT THREADS WITH PVC COATED RIGID CONDUIT TOUCH-UP COMPOUND PRIOR TO ASSEMBLY.

E917 TYP — FINISHED OUTDOOR CONDUIT STUB-UP DETAIL

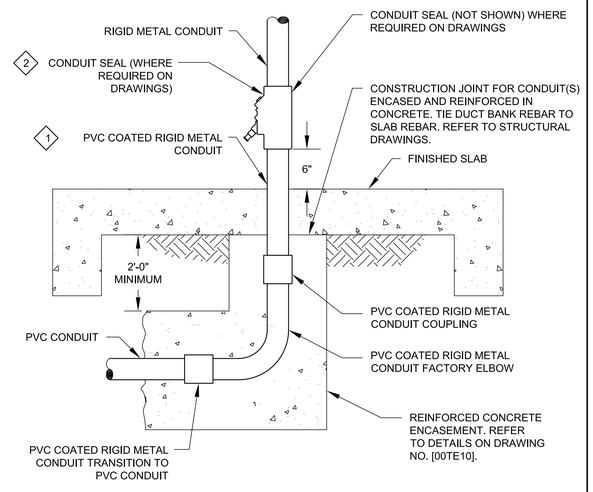

DETAIL NOTES

1. ALTHOUGH SHOWN EXPOSED AND REQUIRED OTHERWISE BY THE SPECIFICATIONS, FURNISH AND INSTALL PER THE REQUIREMENTS OF THE "UNDERGROUND CONDUIT IN DUCT BANK SYSTEM" SUBSECTION OF SECTION 16150 OF THE CONTRACT SPECIFICATIONS.
2. FURNISH AND INSTALL CONDUIT SEALING FITTING WHERE SHOWN ON PLANS. OTHERWISE FURNISH AND INSTALL PVC COATED CONDUIT TO RIGID METAL CONDUIT TRANSITION, REFER TO KEYNOTE 4 ON THIS DRAWING FOR ADDITIONAL INFORMATION. THOROUGHLY COAT THREADS WITH PVC COATED RIGID CONDUIT TOUCH-UP COMPOUND PRIOR TO ASSEMBLY.

E918 TYP — FINISHED INDOOR CONDUIT STUB-UP DETAIL

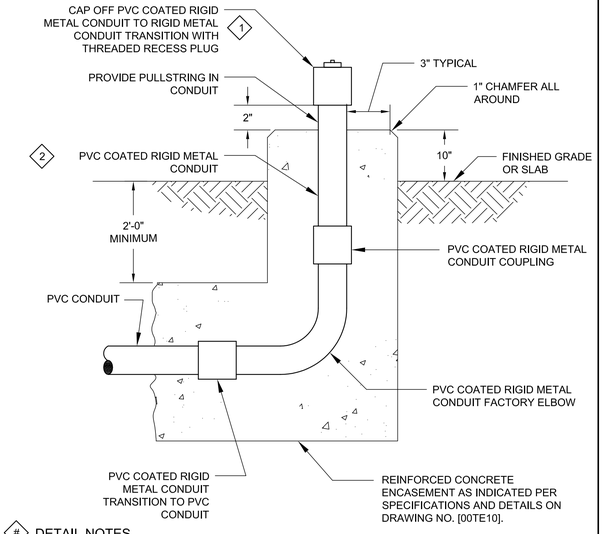

DETAIL NOTES

1. FURNISH AND INSTALL ALUMINUM COUPLING AT THIS LOCATION TO INTERCONNECT FEMALE PVC COATED RIGID METAL CONDUIT TO RIGID METAL CONDUIT SYSTEM. THOROUGHLY COAT THREADS WITH PVC COATED RIGID CONDUIT TOUCH-UP COMPOUND PRIOR TO ASSEMBLY.
2. ALTHOUGH SHOWN EXPOSED AND REQUIRED OTHERWISE BY THE SPECIFICATIONS, FURNISH AND INSTALL PER THE REQUIREMENTS OF THE "UNDERGROUND CONDUIT IN DUCT BANK SYSTEM" SUBSECTION OF SECTION 16150 OF THE CONTRACT SPECIFICATIONS.

E919 TYP — FINISHED OUTDOOR FUTURE CONDUIT STUB-UP DETAIL

THIS CONFORMED DOCUMENT IS RELEASED FOR THE CONVENIENCE OF THE CONTRACTOR UNDER THE AUTHORITY OF:

K. A. Harutunian — 11-01-22

K. A. HARUTUNIAN, P.E. — DATE
TX LIC NO. 59181

SEE DISCLAIMER FOR LIMITATIONS OF USE.

CONTRACT DOCUMENTS DATED FEBRUARY 28, 2022, AS PART OF THE BIDDING DOCUMENTS (DRAWINGS AND SPECIFICATIONS) AND SUBSEQUENTLY ISSUED ADDENDA HAVE BEEN MERGED INTO ONE CONFORMING SET OF DOCUMENTS FOR THE CONVENIENCE OF THE CONTRACTOR. IF INCONSISTENCIES OR AMBIGUITIES BETWEEN "CONFORMED" DOCUMENTS AND CONTRACT DOCUMENTS ARE FOUND, THE CONTRACT DOCUMENTS SHALL GOVERN.

This document, and the designs incorporated herein, is an instrument of professional service that has been developed, designed and prepared by Harutunian Engineering, Inc., and is not to be used, in whole or in part, for any other project without giving written notice to Harutunian Engineering, Inc.

REV	DATE	BY	DESCRIPTION
			CONFORMED DOCUMENTS

DESIGNED HEI | DRAWN HEI | CHECKED HEI | DATE NOVEMBER 2022

** ORIGINAL SEALED BY K.A. HARUTUNIAN 02-28-22 TX PE 59181 **

HARUTUNIAN ENGINEERING INCORPORATED
ENGINEERING AND ENVIRONMENTAL CONSULTANTS
8100 CROSS PARK DRIVE
AUSTIN, TEXAS 78754
TBPE REGISTRATION NO. F-2408

carollo — TBPELS No. F-882

CITY OF AUSTIN — FOUNDED 1839

CITY OF AUSTIN

CITY OF AUSTIN
WILD HORSE RANCH WWTP EXPANSION
ELECTRICAL
ELECTRICAL TYPICAL DETAILS - 6

VERIFY SCALES
BAR IS ONE INCH ON ORIGINAL DRAWING
0 1"
IF NOT ONE INCH ON THIS SHEET, ADJUST SCALES ACCORDINGLY

JOB NO. 10976A.00
DRAWING NO. 00TE06
SHEET NO. 80 OF 464

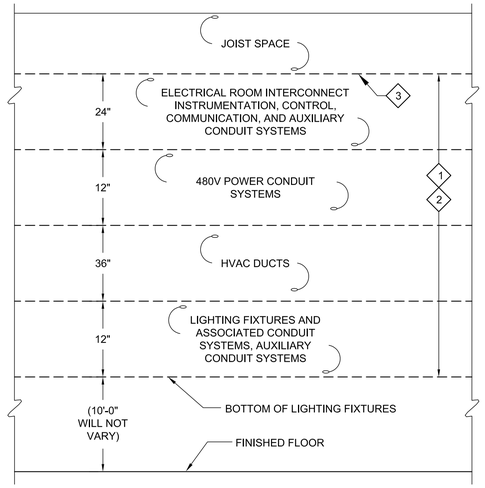

DETAIL NOTES

1. THESE ARE SUGGESTED LAYERS WITH MEASUREMENTS ALLOCATED FOR CONDUITS AND OTHER SYSTEMS. THERE MAY BE SITUATIONS WHERE CONDUITS INTRUDE INTO OTHER LAYERS IF NECESSARY.
2. CONDUIT SUPPORTS NOT SHOWN HERE. REFER TO OTHER TYPICAL DETAILS.
3. BEGIN INSTALLATION OF UPPER MOST LAYER OF CONDUITS IMMEDIATELY BELOW BOTTOM CHORD OF STRUCTURAL JOISTS IN CEILING. CERTAIN CONDUITS SHALL BE LOCATED WITHIN JOIST SPACE TO AVOID CONFLICTS AS INDICATED ON FLOOR PLANS AND CONDUIT CORRIDOR DRAWINGS. OTHER CONDUITS MAY BE LOCATED IN JOIST SPACE AS NEEDED TO FACILITATE CONDUIT BANK CROSSINGS AND TO AVOID CONFLICTS. SUPPORT CONDUITS FROM JOISTS PER APPLICABLE ELECTRICAL AND STRUCTURAL DETAILS. COORDINATE WITH STRUCTURAL AND HVAC.

E920 TYP ELECTRICAL ROOM CONDUIT/SYSTEMS LAYERING CONCEPT

DETAIL NOTES

1. CONDUIT/WIRE CONTINUES AS SHOWN ON PLAN DRAWINGS. FURNISH AND INSTALL CONDUIT SEAL WHERE REQUIRED ON DRAWINGS.

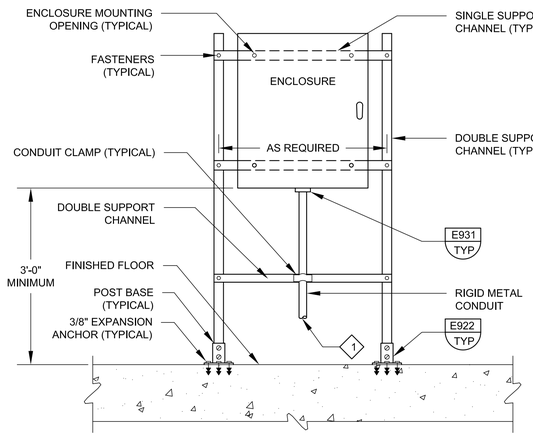

E921 TYP TYPICAL FRONT ELEVATION ENCLOSURE RACK DETAIL

DETAIL NOTES

1. AT LOCATIONS WHERE POST BASES OR OTHER SUPPORTS ARE MOUNTED TO FINISHED FLOOR, INSTALL 50 YEAR NON-SHRINK GROUT BETWEEN BASE PLATE AND FINISHED FLOOR. BEVEL EDGE ON ALL SIDES, TYPICAL FOR ALL FLOOR MOUNTED POST BASES AND OTHER FLOOR MOUNTED SUPPORTS ON PROJECT.
2. THE STRUCTURE TYPE TO WHICH EQUIPMENT AND/OR SUPPORT SYSTEMS SHALL BE MOUNTED MAY VARY. THE EQUIPMENT ANCHOR TYPE SHALL CORRESPOND TO THE TYPE OF STRUCTURE TO WHICH THE EQUIPMENT AND/OR SUPPORT SYSTEMS ARE ATTACHED. THE DRAWING REFLECTS A SPECIFIC STRUCTURE TYPE WITH CORRESPONDING ANCHOR TYPE AND IS TYPICAL FOR THE STRUCTURE TYPE SHOWN. TO ATTACH EQUIPMENT/SUPPORT SYSTEMS TO PRE-CAST/CAST-IN-PLACE CONCRETE WALL/FLOOR SLAB STRUCTURE TYPES, FURNISH AND INSTALL BOLT WITH EXPANSION INSERT ANCHOR. TO ATTACH EQUIPMENT/SUPPORT SYSTEMS TO A CONCRETE MASONRY UNIT (CMU)/BRICK WALL STRUCTURE TYPE, FURNISH AND INSTALL BOLT WITH EXPANSION ANCHOR. TO ATTACH EQUIPMENT/SUPPORT SYSTEMS TO STEEL STRUCTURE TYPE, FURNISH AND INSTALL BOLTING ASSEMBLY. COORDINATE ATTACHMENT REQUIREMENTS WITH STRUCTURAL AND SPECIFICATIONS.

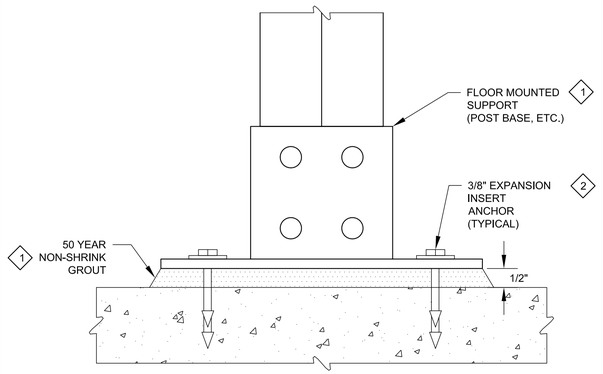

E922 TYP TYPICAL POST BASE FLOOR INSTALLATION

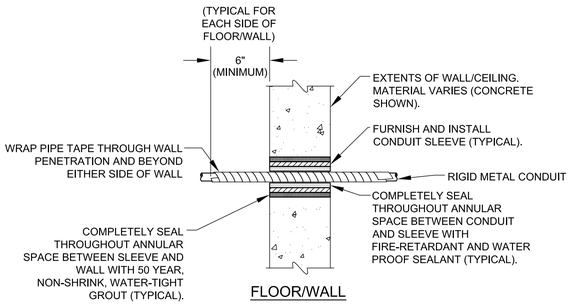

FLOOR/WALL

E923 TYP CONDUIT PENETRATION DETAIL

NOTE:
THIS DETAIL DOES NOT APPLY TO FLOOR PENETRATIONS WHERE SLAB IS AT GRADE, BUT ONLY WHERE SLAB IS BETWEEN LEVELS.

DETAIL NOTES

1. FURNISH AND INSTALL GROUNDING CONDUIT/CONDUCTOR IF SHOWN ON PLAN DRAWINGS. ROUTE GROUNDING CONDUIT/CONDUCTOR THROUGH STRUCTURAL CONCRETE. TERMINATE WITH PVC BELL END FLUSH WITH EDGE OF STRUCTURE AND SEAL AND PACK/FILL ANNULAR SPACE AROUND CABLE WITH FIRE-RETARDANT SEALANT. BOTTOM ELEVATION OF CONDUIT SHALL BE ABOVE MAXIMUM LIQUID LEVEL. COORDINATE WITH STRUCTURAL/MECHANICAL.
2. GROUNDING CONDUCTOR CONTINUES EXPOSED TO DESTINATION. REFER TO GROUNDING PLAN DRAWINGS. SEAL AND PACK/FILL ANNULAR SPACE AROUND CABLE WITH FIRE-RETARDANT SEALANT.
3. FASTEN/BOND GROUNDING CONDUCTOR TO HAND RAIL USING 3/8-INCH TYPE 316 STAINLESS STEEL U-BOLT ASSEMBLY AND COMPRESSION LUG.
4. FURNISH AND INSTALL PVC BELL END FLUSH WITH FINISHED SURFACE OF STRUCTURE IN AREAS WHERE UPPER CONCRETE STRUCTURE IS FLUSH WITH INTERIOR BASIN WALL. REFER TO STRUCTURAL.

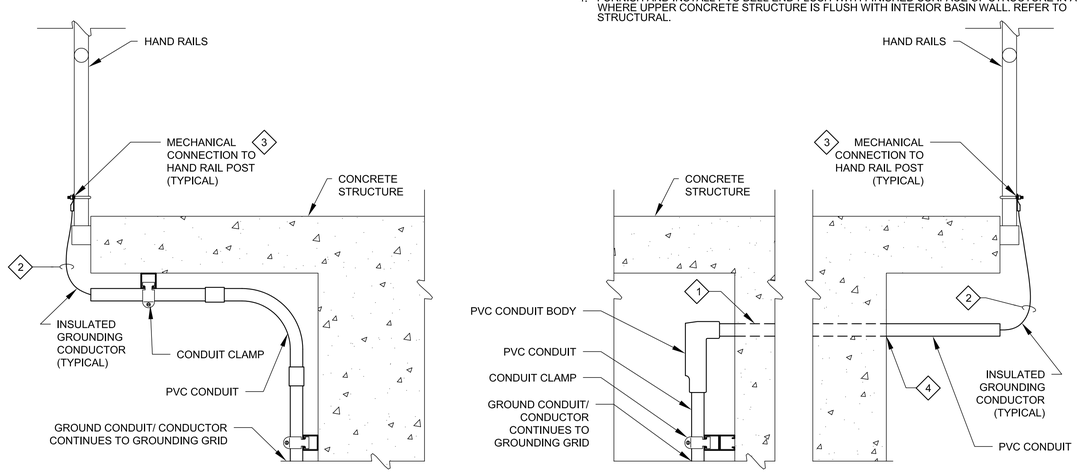

E924 TYP HANDRAIL GROUNDING DETAILS

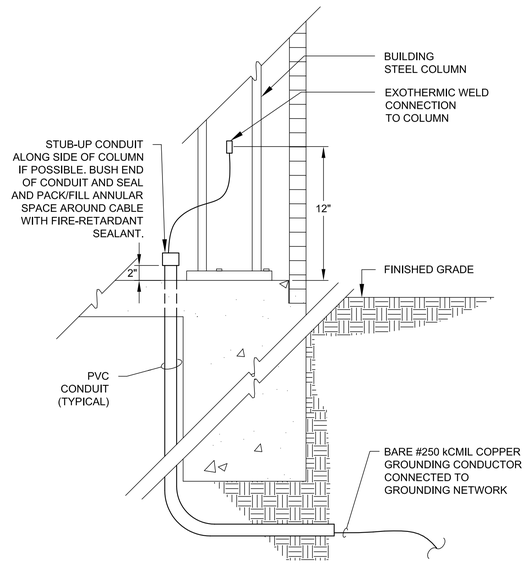

E925 TYP TYPICAL GROUNDING CONDUCTOR/ CONNECTION TO BUILDING COLUMN

THIS CONFORMED DOCUMENT IS RELEASED FOR THE CONVENIENCE OF THE CONTRACTOR UNDER THE AUTHORITY OF:

K. A. Harutunian — 11-01-22

K. A. HARUTUNIAN, P.E. — DATE
TX LIC NO. 59181

SEE DISCLAIMER FOR LIMITATIONS OF USE.

CONTRACT DOCUMENTS DATED FEBRUARY 28, 2022, AS PART OF THE BIDDING DOCUMENTS (DRAWINGS AND SPECIFICATIONS) AND SUBSEQUENTLY ISSUED ADDENDA HAVE BEEN MERGED INTO ONE CONFORMING SET OF DOCUMENTS FOR THE CONVENIENCE OF THE CONTRACTOR. IF INCONSISTENCIES OR AMBIGUITIES BETWEEN "CONFORMED" DOCUMENTS AND CONTRACT DOCUMENTS ARE FOUND, THE CONTRACT DOCUMENTS SHALL GOVERN.

This document, and the designs incorporated herein, is an instrument of professional service that has been developed, designed and prepared by Harutunian Engineering, Inc., and is not to be used, in whole or in part, for any other project without giving written notice to Harutunian Engineering, Inc.

REV	DATE	BY	DESCRIPTION

CONFORMED DOCUMENTS

DESIGNED HEI
DRAWN HEI
CHECKED HEI
DATE NOVEMBER 2022

** ORIGINAL SEALED BY K.A. HARUTUNIAN 02-28-22 TX PE 59181 **

HARUTUNIAN ENGINEERING INCORPORATED
ENGINEERING AND ENVIRONMENTAL CONSULTANTS
8100 CROSS PARK DRIVE
AUSTIN, TEXAS 78754
TBPE REGISTRATION NO. F-2408

carollo
TBPELS No. F-882

CITY OF AUSTIN — FOUNDED 1839

CITY OF AUSTIN

CITY OF AUSTIN
WILD HORSE RANCH WWTP EXPANSION
ELECTRICAL
ELECTRICAL TYPICAL DETAILS - 7

VERIFY SCALES
BAR IS ONE INCH ON ORIGINAL DRAWING
0 — 1"
IF NOT ONE INCH ON THIS SHEET, ADJUST SCALES ACCORDINGLY

JOB NO. 10976A.00
DRAWING NO. 00TE07
SHEET NO. 81 OF 464

DETAIL NOTES

1. CONTRACTOR SHALL COORDINATE THE INSTALLATION OF, AND PROTECTION OF, THE ENTIRE GROUNDING NETWORK (GROUND RODS AND ASSOCIATED GROUNDING CONDUCTORS IN AND AROUND THE STRUCTURE) WITH CIVIL/STRUCTURAL/MECHANICAL DURING ALL PHASES OF CONSTRUCTION.

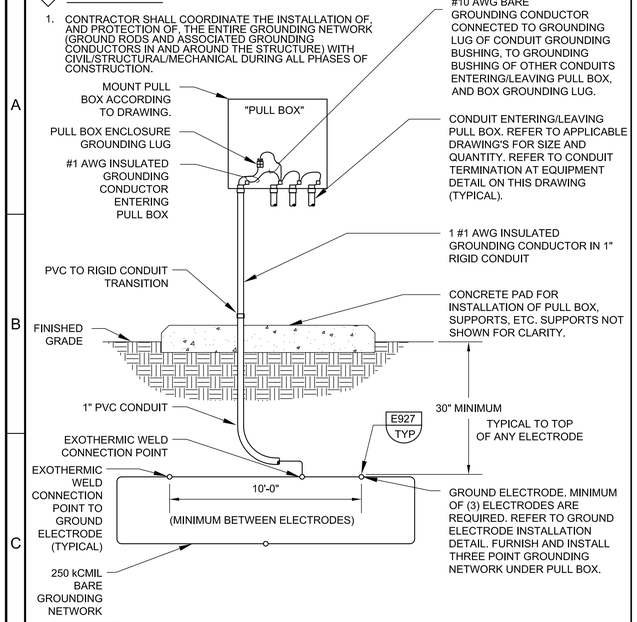

1 E926 TYP — PULL BOX GROUNDING DETAIL

DETAIL NOTES

1. CONTRACTOR SHALL CAREFULLY COORDINATE THE INSTALLATION OF, AND PROTECTION OF, THE ENTIRE GROUNDING NETWORK (GROUND RODS AND ASSOCIATED GROUNDING CONDUCTORS IN AND AROUND THE STRUCTURE) WITH CIVIL/STRUCTURAL/MECHANICAL DRAWINGS/CONTRACTORS DURING ALL PHASES OF CONSTRUCTION.
2. CAREFULLY COORDINATE THE LOCATION/INSTALLATION OF EACH GROUND ROD WITH CIVIL/STRUCTURAL/MECHANICAL/ELECTRICAL DRAWINGS/CONTRACTORS TO AVOID CONFLICTS. SLIGHT RELOCATION OF GROUND RODS AND/OR GROUNDING CONDUCTORS FROM THAT SHOWN ON GROUNDING PLAN MAY BE NECESSARY TO AVOID CONFLICTS. ARRANGE/INSTALL GROUND RODS IN ORDER TO MAINTAIN A MINIMUM DISTANCE OF 13'-0" FROM ANY OTHER GROUND ROD. CONTRACTOR SHALL INSURE THAT A MINIMUM OF 10'-0" OF GROUND ROD IS DRIVEN INTO UNDISTURBED/CLEAR SOIL REGARDLESS OF DEPTH FROM FINISHED SLAB.

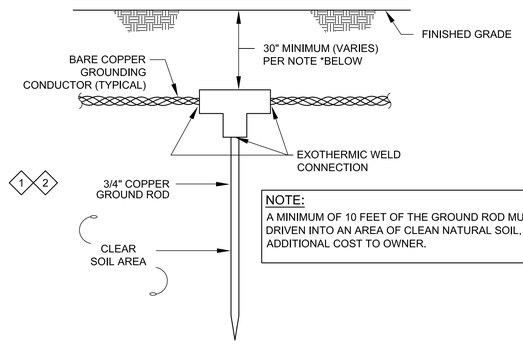

NOTE:
A MINIMUM OF 10 FEET OF THE GROUND ROD MUST BE DRIVEN INTO AN AREA OF CLEAN NATURAL SOIL, AT NO ADDITIONAL COST TO OWNER.

E927 TYP — TYPICAL GROUND ROD INSTALLATION DETAIL

DETAIL NOTES

1. SUPPORT CHANNEL FROM STRUCTURE SIMILAR TO DETAIL E912/[00TE06].
2. #1 AWG GROUNDING CONDUCTOR IS DAISY-CHAINED BETWEEN ADJACENT STRUCTURAL FRAME MEMBERS LOCATED PERPENDICULAR TO MAIN CANOPY STRUCTURAL BEAMS.
3. PROVIDE A TWO BOLT MECHANICAL GROUNDING CONNECTION WITHIN THE JUNCTION BOX. GROUNDING CONDUCTORS SHALL BE CONNECTED TO GROUNDING BOLTS INSIDE THE JUNCTION BOX.

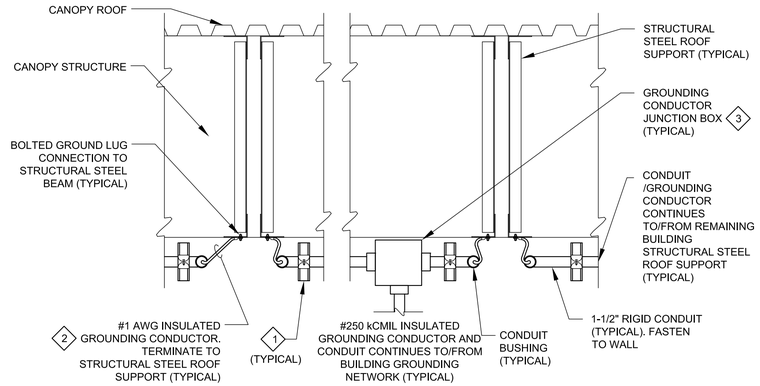

E928 TYP — ROOF STRUCTURE GROUNDING INSTALLATION DETAIL

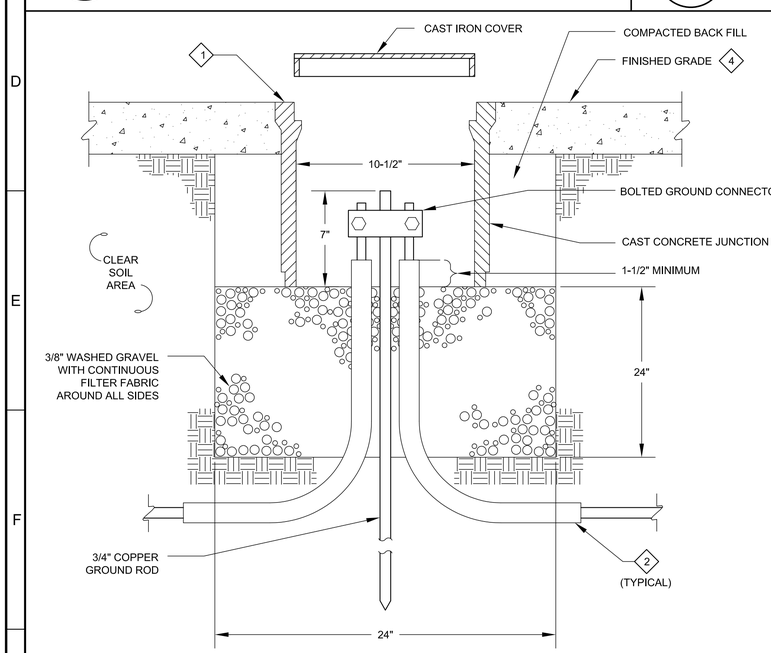

3 E929 TYP — GROUND TEST WELL DETAIL

DETAIL NOTES

1. FURNISH AND INSTALL PRECAST CONCRETE PULLBOX COMPLETE WITH LID. SUBMIT SHOP DRAWINGS AND O&M MANUALS PER SECTION 16550 OF THE CONTRACT SPECIFICATIONS. BOX SHALL BE 10 1/2" X 17 1/4" METER BOX SERIES AS MANUFACTURED BY BROOKS PRODUCTS, OR APPROVED EQUAL. BROOKS PRODUCTS PART NUMBERS ARE:
   A. REINFORCED CONCRETE BODY NO. 36 MB
   B. CAST IRON COVER NO. 36-T
2. 250 KCMIL STRANDED COPPER GROUNDING CONDUCTOR IN 1-1/2" PVC CONDUIT, DIRECT BURIED A MINIMUM OF 30 INCHES BELOW FINISHED GRADE (NOT CONCRETE ENCASED). EACH PVC CONDUIT SHALL EXTEND A MINIMUM OF 12 INCHES HORIZONTALLY FROM THE OUTSIDE EDGE OF THE TEST WELL CONCRETE CAST JUNCTION BOX. COORDINATE LOCATION OF FINISHED GRADE (PARKING LOT/SIDEWALK/NATURAL GRADE/ETC.) WITH SITE/CIVIL DRAWINGS. SLOPE FINISHED GRADE AWAY FROM TEST WELL LID TO PREVENT WATER ACCUMULATION IN VICINITY OF WELL LID.
3. CONTRACTOR SHALL COORDINATE THE INSTALLATION OF, AND PROTECTION OF, THE ENTIRE GROUNDING NETWORK (GROUND ELECTRODES AND ASSOCIATED GROUNDING CONDUCTORS IN AND AROUND THE STRUCTURE) WITH CIVIL/STRUCTURAL/MECHANICAL DRAWINGS/CONTRACTORS DURING ALL PHASES OF CONSTRUCTION.
4. COORDINATE THE LOCATION/INSTALLATION OF EACH GROUND ELECTRODE WITH CIVIL/STRUCTURAL/MECHANICAL/ELECTRICAL DRAWINGS/CONTRACTORS TO AVOID CONFLICTS. SLIGHT RELOCATION OF GROUND ELECTRODES AND/OR GROUNDING CONDUCTORS FROM THAT SHOWN ON GROUNDING PLAN MAY BE NECESSARY TO AVOID CONFLICTS. ARRANGE/INSTALL GROUND ELECTRODES IN ORDER TO MAINTAIN A MINIMUM DISTANCE OF 10'-0" FROM ALL OTHER GROUND ELECTRODES.

THIS CONFORMED DOCUMENT IS RELEASED FOR THE CONVENIENCE OF THE CONTRACTOR UNDER THE AUTHORITY OF:

K. A. HARUTUNIAN, P.E. — 11-01-22
TX LIC NO. 59181 — DATE

SEE DISCLAIMER FOR LIMITATIONS OF USE.

CONTRACT DOCUMENTS DATED FEBRUARY 28, 2022, AS PART OF THE BIDDING DOCUMENTS (DRAWINGS AND SPECIFICATIONS) AND SUBSEQUENTLY ISSUED ADDENDA HAVE BEEN MERGED INTO ONE CONFORMING SET OF DOCUMENTS FOR THE CONVENIENCE OF THE CONTRACTOR. IF INCONSISTENCIES OR AMBIGUITIES BETWEEN "CONFORMED" DOCUMENTS AND CONTRACT DOCUMENTS ARE FOUND, THE CONTRACT DOCUMENTS SHALL GOVERN.

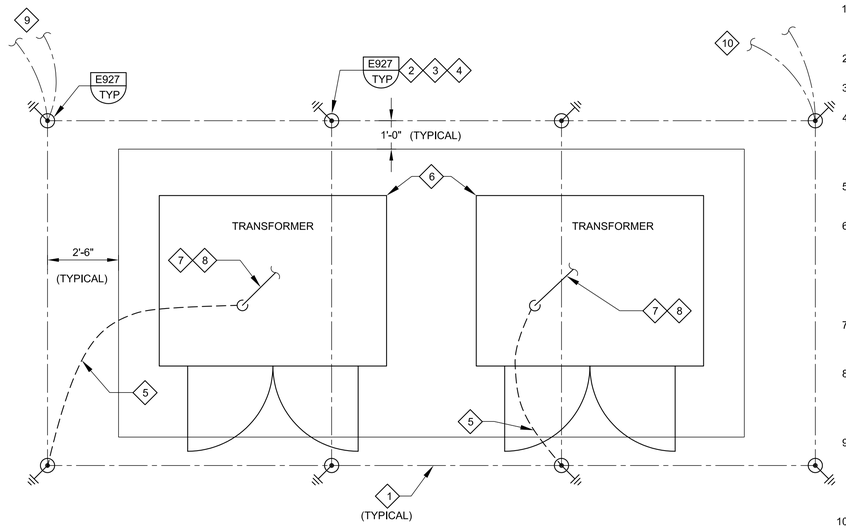

E930 TYP — TRANSFORMER GROUNDING DETAIL

DETAIL NOTES

1. #250 kCMIL BARE COPPER GROUNDING CONDUCTOR. MINIMUM BURIAL DEPTH IS 30" BELOW FINISHED GRADE. THIS IS TYPICAL BETWEEN ALL GROUND ELECTRODES AND THROUGHOUT THE GROUNDING SYSTEM.
2. COPPER GROUND ELECTRODE, BURIED 30" BELOW FINISHED GRADE AT MINIMUM.
3. ALL CONNECTIONS OF GROUND CONDUCTORS TO ELECTRODES TO BE BY EXOTHERMIC WELD.
4. THE SPACING OF GROUND ELECTRODES AROUND PAD IS APPROXIMATE AND MAY BE ADJUSTED TO FIT THE NUMBER OF ELECTRODES SHOWN. MINIMUM SEPARATION OF ELECTRODES SHALL BE 10'-0" CENTER TO CENTER. MAXIMUM SEPARATION SHALL BE 15'-0" CENTER TO CENTER.
5. #250 kCMIL INSULATED COPPER GROUNDING CONDUCTOR IN 1-1/2" PVC CONDUIT. BURY BELOW SLAB AT MINIMUM OF 30" FROM TOP SURFACE.
6. THE ACTUAL REQUIRED SIZE OF THE CONDUIT ENTRANCE AREAS IS TO BE DETERMINED BY THE TRANSFORMER MANUFACTURER. THE ACTUAL EQUIPMENT SIZE MAY VARY. THE LOCATION AND SIZE OF THE TRANSFORMER CONDUIT ENTRANCE AREAS SHALL BE COORDINATED WITH THE CONCRETE FOUNDATION PLANS OF THE TRANSFORMER EQUIPMENT PAD. REFER TO THE APPLICABLE CIVIL/STRUCTURAL/MECHANICAL/ELECTRICAL, ETC. DRAWINGS.
7. COORDINATE TRANSFORMER GROUNDING WITH AUSTIN ENERGY. BOND TRANSFORMER NEUTRAL TO GROUNDING BUS BAR. BOND GROUNDING BUS BAR TO TRANSFORMER GROUNDING SYSTEM.
8. BOND GROUNDING/BONDING CONDUCTORS TO/FROM GROUND BUS IN SERVICE EQUIPMENT TO GROUNDING BUS BAR INSTALLED IN TRANSFORMER SECONDARY COMPARTMENT. CONDUCTORS ROUTE IN FEEDER CONDUIT(S). REFER TO CONDUIT & WIRE SCHEDULE FOR ADDITIONAL INFORMATION.
9. PROPOSED CONDUIT/WIRE CONTINUES TO/FROM POINT ON PRIMARY-SIDE POWER DUCT BANK WHERE GROUNDING CONDUIT/WIRE BREAKS OUT OF DUCT BANK FOR TERMINATION AT TEST WELL. GROUNDING CONDUIT/WIRE INTERCONNECTS PROCESS AREA GROUNDING SYSTEM WITH PLANT GROUNDING SYSTEM. EXACT NUMBER OF CONDUITS/WIRES MAY VARY. REFER TO SITE PLAN.
10. PROPOSED CONDUIT/WIRE CONTINUES TO/FROM PROCESS AREA GROUNDING GRID. COORDINATE ROUTE WITH UNDERGROUND DUCT BANK/MECHANICAL PIPING/ETC., IN VICINITY. EXACT NUMBER OF CONDUITS/WIRES MAY VARY. REFER TO SITE PLAN.

This document, and the designs incorporated herein, is an instrument of professional service that has been developed, designed and prepared by Harutunian Engineering, Inc., and is not to be used, in whole or in part, for any other project without giving written notice to Harutunian Engineering, Inc.

REV	DATE	BY	DESCRIPTION

CONFORMED DOCUMENTS

DESIGNED HEI
DRAWN HEI
CHECKED HEI
DATE NOVEMBER 2022

** ORIGINAL SEALED BY K.A. HARUTUNIAN 02-28-22 TX PE 59181 **

HARUTUNIAN ENGINEERING INCORPORATED
ENGINEERING AND ENVIRONMENTAL CONSULTANTS
8100 CROSS PARK DRIVE
AUSTIN, TEXAS 78754
TBPE REGISTRATION NO. F-2408
TBPELS No. F-882

CITY OF AUSTIN

CITY OF AUSTIN
WILD HORSE RANCH WWTP EXPANSION
ELECTRICAL
ELECTRICAL TYPICAL DETAILS - 8

VERIFY SCALES
BAR IS ONE INCH ON ORIGINAL DRAWING
0 1"
IF NOT ONE INCH ON THIS SHEET, ADJUST SCALES ACCORDINGLY

JOB NO. 10976A.00
DRAWING NO. 00TE08
SHEET NO. 82 OF 464

 # DETAIL NOTES

1. GROUND BUS BAR NOT NECESSARILY IN EXACT LOCATION SHOWN ON THIS DRAWING. GROUND BUS BAR DEPICTED IN THIS MANNER FOR PURPOSES OF CLARITY. CONTRACTOR SHALL FURNISH AND INSTALL SUFFICIENT LENGTH OF ALL GROUNDING CONDUCTORS TO ROUTE THROUGH DESIGNATED WIRING AREAS OF EQUIPMENT TO/FROM ACTUAL LOCATION OF EQUIPMENT GROUND BUS BAR.

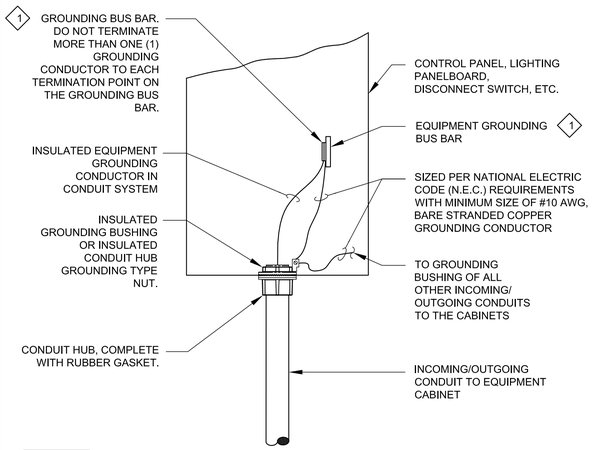

E931 TYP — TYPICAL FOR BOTTOM AND TOP CONDUIT ENTRY TO EQUIPMENT-INDOOR

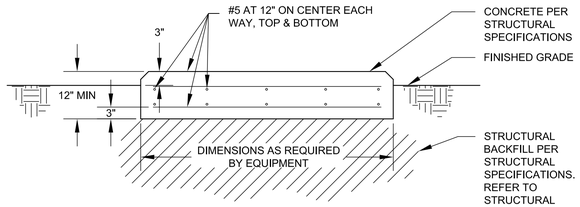

E932 TYP — TYPICAL OUTDOOR ELECTRICAL EQUIPMENT PAD CONCRETE SLAB DETAIL

 # DETAIL NOTES

1. SUPPORT CHANNEL FROM STRUCTURE SIMILAR TO DETAIL E914/[00TE06].
2. CONDUIT/WIRE CONTINUES AS SHOWN ON PLAN DRAWINGS. FURNISH AND INSTALL CONDUIT SEAL WHERE REQUIRED ON DRAWINGS.

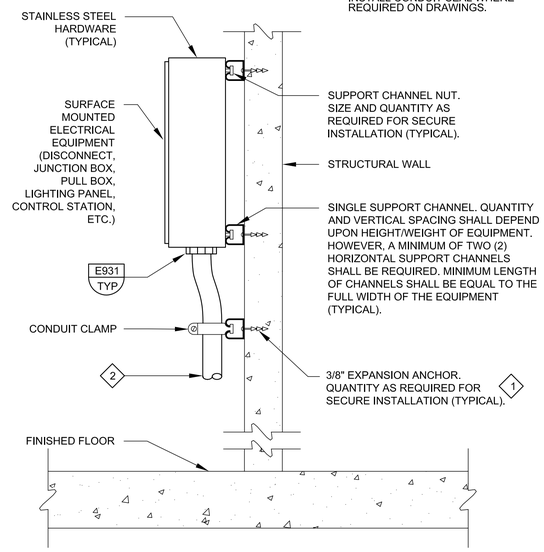

E933 TYP — SIDE ELEVATION SURFACE/WALL MOUNTED ELECTRICAL EQUIPMENT INSTALLATION DETAIL

 # DETAIL NOTES

1. GROUND BUS BAR LOCATION SHOWN FOR ILLUSTRATION ONLY AND MAY NOT NECESSARILY BE LOCATED IN EXACT LOCATION SHOWN. CONTRACTOR SHALL FURNISH AND INSTALL SUFFICIENT LENGTH OF ALL GROUNDING CONDUCTORS TO ROUTE THROUGH DESIGNATED WIRING AREAS OF EQUIPMENT TO/FROM ACTUAL LOCATION OF EQUIPMENT GROUND BUS BAR.

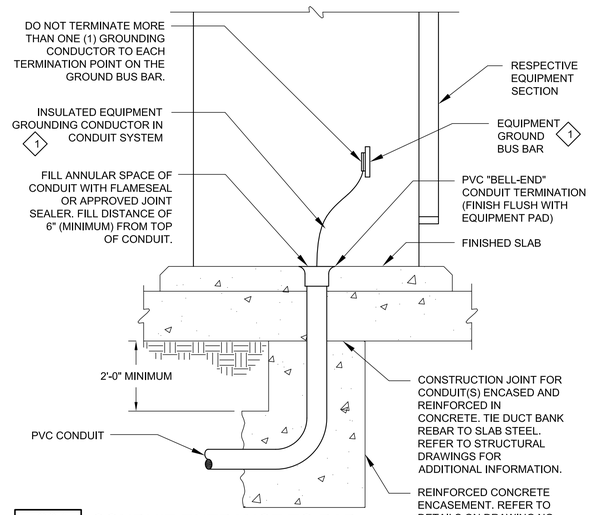

E934 TYP — CONDUIT ENTRANCE TO PAD MOUNTED EQUIPMENT DETAIL

 # DETAIL NOTES

1. ALTHOUGH SHOWN EXPOSED AND REQUIRED OTHERWISE BY THE SPECIFICATIONS, FURNISH AND INSTALL PER THE REQUIREMENTS OF THE "UNDERGROUND CONDUIT IN DUCT BANK SYSTEM" SUBSECTION OF SECTION 16150 OF THE CONTRACT SPECIFICATIONS.

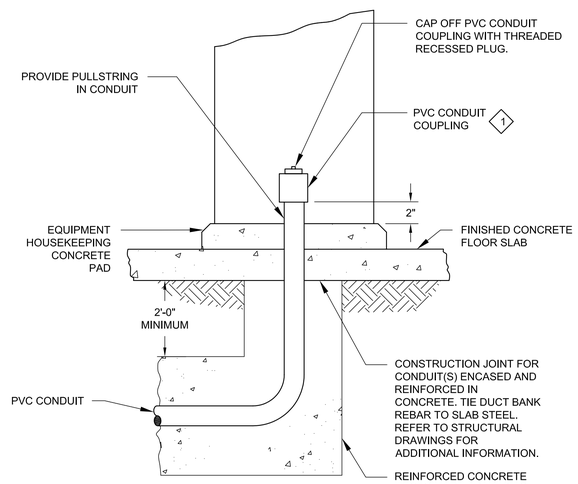

E935 TYP — FUTURE USE CONDUIT ENTRANCE TO PAD MOUNTED EQUIPMENT DETAIL

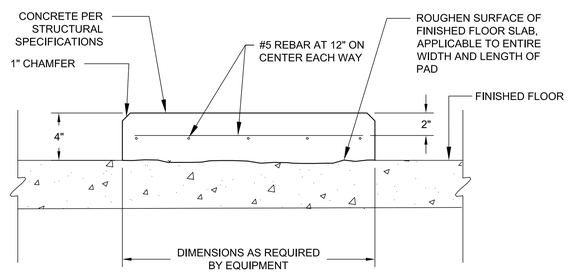

E936 TYP — INDOOR ELECTRICAL EQUIPMENT PAD CONCRETE SLAB DETAIL

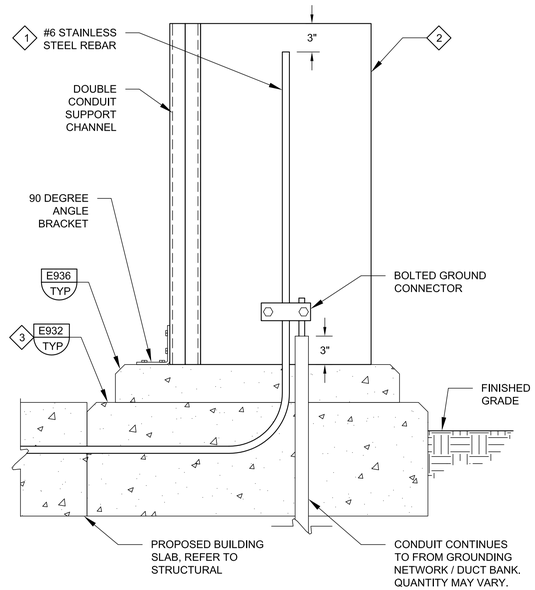

E937 TYP — CONCRETE ENCASED ELECTRODE ACCESSIBILITY DETAIL

 # DETAIL NOTES

1. CONTRACTOR SHALL INSTALL A CONCRETE ENCASED ELECTRODE GROUNDING SYSTEM TO COMPLY WITH CITY OF AUSTIN AMENDMENT TO THE NATIONAL ELECTRICAL CODE ORDINANCE 20090305-047 ARTICLE 250.52(A)(3) AND OBTAIN CITY INSPECTION PRIOR TO CONCRETE PLACEMENT OF BUILDING GRADE BEAMS OR SLABS. SAID GROUNDING SYSTEM SHALL INCLUDE A MINIMUM OF 20 FEET OF #6 STAINLESS STEEL REBAR, ROUTED HORIZONTALLY WITHIN THE BUILDING SLAB WITH MINIMUM OF 4" COVER AND ATTACHED TO THE REINFORCING STEEL BARS.
2. FURNISH AND INSTALL STAINLESS STEEL JUNCTION BOX MINIMALLY SIZED 36"H x 24"W x 18"D. JUNCTION BOX SHALL BE MOUNTED SUCH THAT THE BOTTOM OF THE BOX IS FLUSH WITH THE TOP OF THE EQUIPMENT PAD. CUT A HOLE IN THE BOTTOM OF THE BOX SO THAT THE GROUNDING ELECTRODE EXTENDS INTO THE BOX. LABEL JUNCTION BOX AS "GROUND PORT" TO COMPLY WITH CITY OF AUSTIN AMENDMENT TO THE NATIONAL ELECTRICAL CODE ORDINANCE 20141211-199 ARTICLE 205.68(A)(A).
3. FURNISH AND INSTALL EQUIPMENT PAD SIMILAR TO DETAIL TWO ON THIS DRAWING. PAD SHALL MATCH THICKNESS OF STRUCTURAL SLAB (EXCLUDING PERIMETER BEAMS) WITH MINIMUM DEPTH OF 7" BELOW GRADE.

THIS CONFORMED DOCUMENT IS RELEASED FOR THE CONVENIENCE OF THE CONTRACTOR UNDER THE AUTHORITY OF:

K. A. HARUTUNIAN, P.E. — 11-01-22 DATE
TX LIC NO. 59181

SEE DISCLAIMER FOR LIMITATIONS OF USE.

CONTRACT DOCUMENTS DATED FEBRUARY 28, 2022, AS PART OF THE BIDDING DOCUMENTS (DRAWINGS AND SPECIFICATIONS) AND SUBSEQUENTLY ISSUED ADDENDA HAVE BEEN MERGED INTO ONE CONFORMING SET OF DOCUMENTS FOR THE CONVENIENCE OF THE CONTRACTOR. IF INCONSISTENCIES OR AMBIGUITIES BETWEEN "CONFORMED" DOCUMENTS AND CONTRACT DOCUMENTS ARE FOUND, THE CONTRACT DOCUMENTS SHALL GOVERN.

This document, and the designs incorporated herein, is an instrument of professional service that has been developed, designed and prepared by Harutunian Engineering, Inc., and is not to be used, in whole or in part, for any other project without giving written notice to Harutunian Engineering, Inc.

REV	DATE	BY	DESCRIPTION
			CONFORMED DOCUMENTS

DESIGNED HEI | DRAWN HEI | CHECKED HEI | DATE NOVEMBER 2022

** ORIGINAL SEALED BY K.A. HARUTUNIAN 02-28-22 TX PE 59181 **

HARUTUNIAN ENGINEERING INCORPORATED
ENGINEERING AND ENVIRONMENTAL CONSULTANTS
8100 CROSS PARK DRIVE AUSTIN, TEXAS 78754
TBPE REGISTRATION NO. F-2408
carollo TBPELS No. F-882

CITY OF AUSTIN

CITY OF AUSTIN
WILD HORSE RANCH WWTP EXPANSION
ELECTRICAL
ELECTRICAL TYPICAL DETAILS - 9

VERIFY SCALES: BAR IS ONE INCH ON ORIGINAL DRAWING (0 — 1"). IF NOT ONE INCH ON THIS SHEET, ADJUST SCALES ACCORDINGLY

JOB NO. 10976A.00
DRAWING NO. 00TE09
SHEET NO. 83 OF 464

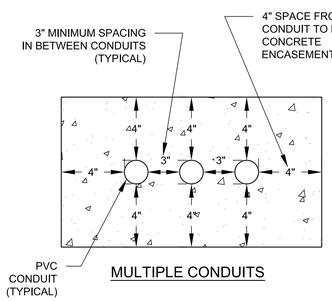

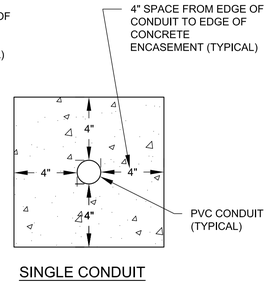

SINGLE-LAYER DUCT/CONDUIT

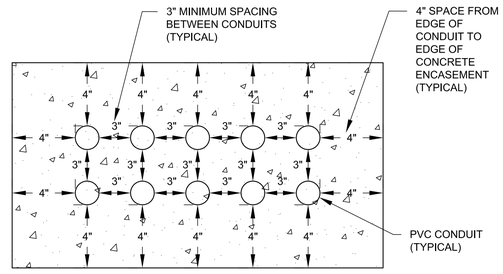

MULTI-LAYER DUCT/CONDUIT

E938 TYP BANK-SPACING DETAIL FOR REINFORCED AND CONCRETE ENCASED DUCT/CONDUIT BANKS

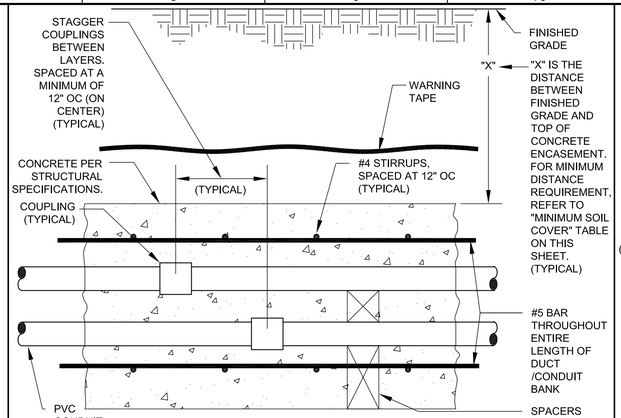

MULTIPLE LAYER DUCT/CONDUIT BANK

◇# DETAIL NOTES

1. MINIMUM COVER IS SHOWN. INCREASE AS NEEDED PER THE REQUIREMENTS OF THE SITE PLANS/DUCT BANK PLAN/PROFILE DRAWINGS AND THE NATIONAL ELECTRICAL CODE.
2. PER NATIONAL ELECTRIC CODE, MINIMUM COVER FOR ALL DUCT BANKS BENEATH A ROADWAY IS 24".

MINIMUM SOIL COVER ◇1

CONDUIT/DUCT BANK CONTENTS	"X"
600V (EXCEPT FOR OUTDOOR POLE MOUNTED WALKWAY LIGHTING FIXTURES)	24"
5kV AND 15kV	36"
15kV AND FIBER OPTIC IN COMBINED DUCT BANK	36"
STAND ALONE FIBER OPTIC AND/OR I&C DUCT BANK	24"
OUTDOOR POLE MOUNTED WALKWAY LIGHTING FIXTURES	18" ◇2
ALL OTHERS	24"

E939 TYP REINFORCEMENT AND CONCRETE ENCASEMENT LONGITUDINAL SECTION A

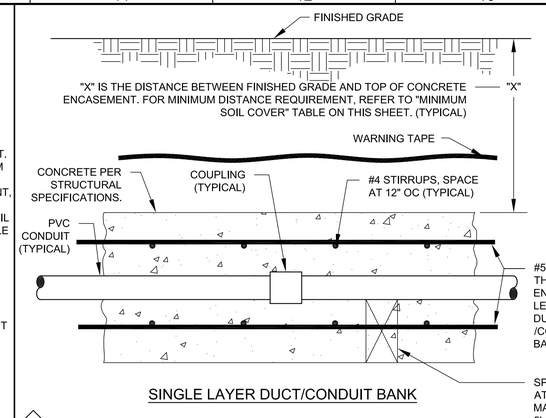

SINGLE LAYER DUCT/CONDUIT BANK

◇# DETAIL NOTES

1. MINIMUM COVER IS SHOWN. INCREASE AS NEEDED PER THE REQUIREMENTS OF THE SITE PLANS/DUCT BANK PLAN/PROFILE DRAWINGS AND THE NATIONAL ELECTRICAL CODE.
2. PER NATIONAL ELECTRIC CODE, MINIMUM COVER FOR ALL DUCT BANKS BENEATH A ROADWAY IS 24".

MINIMUM SOIL COVER ◇1

CONDUIT/DUCT BANK CONTENTS	"X"
600V (EXCEPT FOR OUTDOOR POLE MOUNTED WALKWAY LIGHTING FIXTURES)	24"
5kV AND 15kV	36"
15kV AND FIBER OPTIC IN COMBINED DUCT BANK	36"
STAND ALONE FIBER OPTIC AND/OR I&C DUCT BANK	24"
OUTDOOR POLE MOUNTED WALKWAY LIGHTING FIXTURES	18" ◇2
ALL OTHERS	24"

E940 TYP SINGLE-LAYER DUCT/CONDUIT BANK REINFORCEMENT AND CONCRETE ENCASEMENT LONGITUDINAL SECTION B

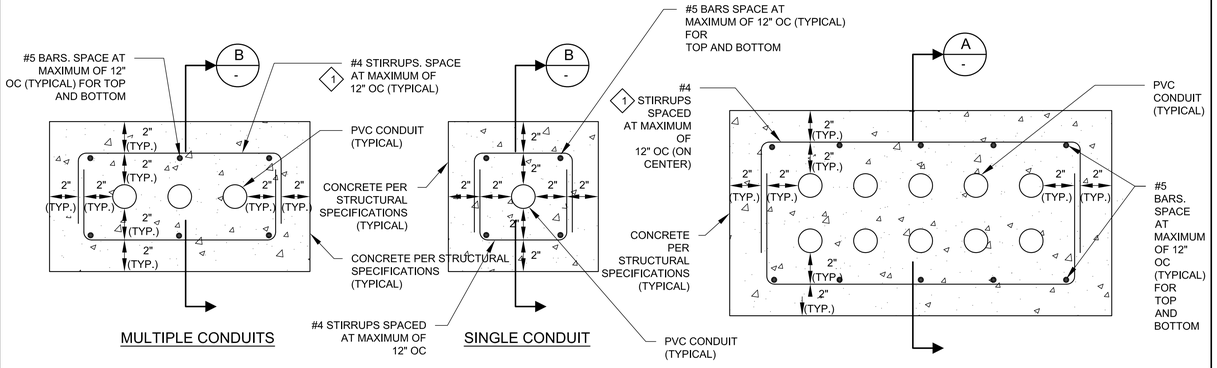

SINGLE-LAYER DUCT/CONDUIT

MULTI-LAYER DUCT/CONDUIT

◇# DETAIL NOTES

1. #4 STIRRUPS SHALL BE SPACED AT A MAXIMUM OF TWELVE INCHES (12") ON CENTER (O.C.). HOWEVER, THE MAXIMUM SPACING REQUIREMENT FOR THE STIRRUPS SHALL BE REDUCED WHEN THE UNDERGROUND DUCT/CONDUIT BANK IS A CERTAIN DISTANCE, AS DENOTED ON THE STRUCTURAL DRAWINGS, FROM THE WALL OF A MANHOLE/STRUCTURE/BUILDING/ETC. (I.E. THE CONTRACTOR SHALL INSTALL MORE STIRRUPS WHEN THE UNDERGROUND DUCT/CONDUIT BANK IS WITHIN A CERTAIN DISTANCE, AS DENOTED ON THE STRUCTURAL DRAWINGS, FROM A WALL OF A MANHOLE/BUILDING/STRUCTURE/ETC.).

E941 TYP BANK REINFORCEMENT AND CONCRETE BANK ENCASEMENT DETAIL

THIS CONFORMED DOCUMENT IS RELEASED FOR THE CONVENIENCE OF THE CONTRACTOR UNDER THE AUTHORITY OF:

K. A. HARUTUNIAN, P.E.
TX LIC NO. 59181

11-01-22
DATE

SEE DISCLAIMER FOR LIMITATIONS OF USE.

CONTRACT DOCUMENTS DATED FEBRUARY 28, 2022, AS PART OF THE BIDDING DOCUMENTS (DRAWINGS AND SPECIFICATIONS) AND SUBSEQUENTLY ISSUED ADDENDA HAVE BEEN MERGED INTO ONE CONFORMING SET OF DOCUMENTS FOR THE CONVENIENCE OF THE CONTRACTOR. IF INCONSISTENCIES OR AMBIGUITIES BETWEEN "CONFORMED" DOCUMENTS AND CONTRACT DOCUMENTS ARE FOUND, THE CONTRACT DOCUMENTS SHALL GOVERN.

This document, and the designs incorporated herein, is an instrument of professional service that has been developed, designed and prepared by Harutunian Engineering, Inc., and is not to be used, in whole or in part, for any other project without giving written notice to Harutunian Engineering, Inc.

REV	DATE	BY	DESCRIPTION
			CONFORMED DOCUMENTS

DESIGNED HEI
DRAWN HEI
CHECKED HEI
DATE NOVEMBER 2022

** ORIGINAL SEALED BY K.A. HARUTUNIAN 02-28-22 TX PE 59181 **

HARUTUNIAN ENGINEERING INCORPORATED
ENGINEERING AND ENVIRONMENTAL CONSULTANTS
8100 CROSS PARK DRIVE
AUSTIN, TEXAS 78754
TBPE REGISTRATION NO. F-2408

carollo®
TBPELS No. F-882

CITY OF AUSTIN
FOUNDED 1839
CITY OF AUSTIN

CITY OF AUSTIN
WILD HORSE RANCH WWTP EXPANSION
ELECTRICAL
ELECTRICAL TYPICAL DETAILS - 10

VERIFY SCALES
BAR IS ONE INCH ON ORIGINAL DRAWING
0 1"
IF NOT ONE INCH ON THIS SHEET, ADJUST SCALES ACCORDINGLY

JOB NO. 10976A.00
DRAWING NO. 00TE10
SHEET NO. 84 OF 464

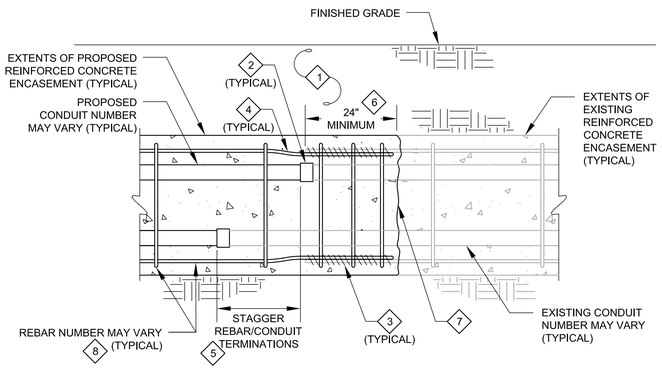

E942 TYP — INTERCONNECTION OF PROPOSED DUCT BANK WITH EXISTING DUCT BANK INSTALLATION DETAIL

DETAIL NOTES

1. HAND EXCAVATE IN VICINITY OF EXISTING DUCT BANK TO AVOID DAMAGE TO EXISTING DUCT BANK CONDUITS, REBAR, ETC. FIELD VERIFY EXISTING DUCT BANK LOCATION.
2. REMOVE CONDUIT CAP FROM EXISTING CONDUIT. FURNISH AND INSTALL COUPLING.
3. REMOVE PIPE TAPE FROM EXISTING REBAR. TIE PROPOSED REBAR TO EXISTING REBAR ALONG OVERLAP LENGTH.
4. BEND PROPOSED REBAR AND OVERLAP EXISTING REBAR A MINIMUM OF 24 INCHES.
5. STAGGER CONDUIT END POINTS. REFER TO PROPOSED DUCT BANK INSTALLATION DETAIL FOR SEPARATION DISTANCE.
6. FURNISH AND INSTALL A MINIMUM OF THREE EVENLY SPACED STIRRUPS IN THIS REGION. STIRRUP SHALL BE NO LESS THAN 3" FROM THE CONCRETE EDGE. REFER TO PROPOSED DUCT BANK INSTALLATION DETAIL FOR PROPOSED STIRRUP SIZE.
7. CLEAN SURFACE OF EXISTING DUCT BANK BY HAND AND COAT WITH EPOXY RESIN/PORTLAND CEMENT BONDING AGENT. APPLICABLE TO ENTIRE WIDTH AND DEPTH OF DUCT BANK.
8. REFER TO PROPOSED DUCT BANK INSTALLATION DETAIL FOR PROPOSED REBAR REQUIREMENTS.

DETAIL NOTES

1. AFTER CONDUITS ARE BRUSHED AND WIPED OUT, GLUE CONDUIT CAP TO ENDS OF CONDUITS TO PREVENT ENTRY OF MOISTURE. PRIOR TO INSTALLING CONDUIT CAP, FURNISH AND INSTALL A PULL STRING INSIDE AND ALONG THE ENTIRE LENGTH OF EACH CONDUIT FOR FUTURE USE. SECURELY TAPE PULL STRING AROUND INTERIOR OF CONDUIT AT CONDUITS TERMINATION POINT.
2. THOROUGHLY CLEAN AND DRY EXPOSED REBAR AROUND ITS CIRCUMFERENCE AND ALONG ITS LENGTH. TIGHTLY WRAP REBAR WITH TWO LAYERS AT HALF LAP WITH SCOTCH #33 TAPE (OR APPROVED EQUAL) TO PREVENT CORROSION.
3. CUT AND STAGGER ALL EXISTING CONDUITS AND REBAR END POINTS.
4. CONTRACTOR SHALL BACKFILL REGION IN, ABOUT, AND AROUND EACH EXPOSED CONDUIT/REBAR EXTENDING BEYOND THE EDGE OF THE EXISTING REINFORCED CONCRETE ENCASEMENT BY HAND.
5. TAPER TOP EDGE 45 DEGREES TO FACILITATE FUTURE CONNECTION TO DUCT BANK.

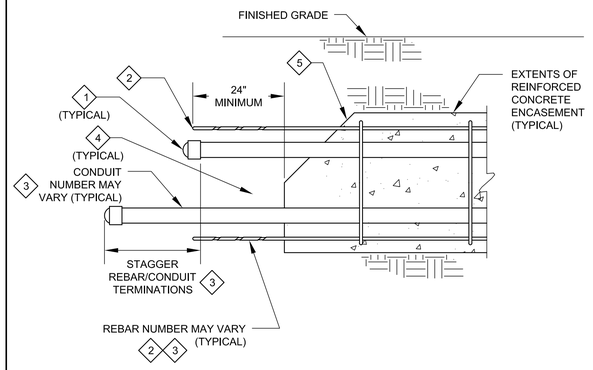

E943 TYP — DETAIL OF DUCT BANK STUB-OUT TERMINATION

DETAIL NOTES

1. CONTRACTOR SHALL BACKFILL REGION IN, ABOUT, AND AROUND EACH EXPOSED CONDUIT/REBAR EXTENDING BEYOND THE EDGE OF THE EXISTING REINFORCED CONCRETE ENCASEMENT BY HAND.
2. AFTER CONDUITS ARE BRUSHED AND WIPED OUT, GLUE CONDUIT CAP TO ENDS OF CONDUITS TO PREVENT ENTRY OF MOISTURE. PRIOR TO INSTALLING CONDUIT CAP, FURNISH AND INSTALL A PULL STRING INSIDE AND ALONG THE ENTIRE LENGTH OF EACH CONDUIT FOR FUTURE USE. SECURELY TAPE PULL STRING AROUND INTERIOR OF CONDUIT AT CONDUITS TERMINATION POINT.
3. THOROUGHLY CLEAN AND DRY EXPOSED REBAR AROUND ITS CIRCUMFERENCE AND ALONG ITS LENGTH. TIGHTLY WRAP REBAR WITH TWO LAYERS AT HALF LAP WITH SCOTCH #33 TAPE (OR APPROVED EQUAL) TO PREVENT CORROSION.
4. CUT AND STAGGER ALL EXISTING CONDUITS AND REBAR END POINTS.

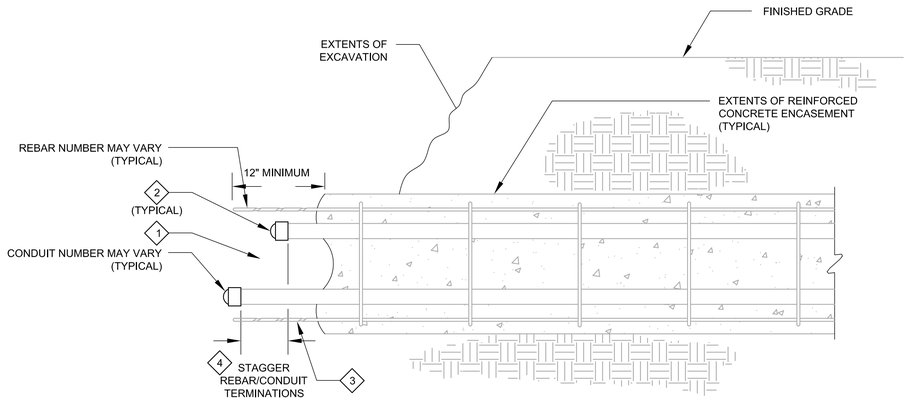

E944 TYP — TYPICAL DETAIL OF EXISTING DUCT BANK TERMINATION

THIS CONFORMED DOCUMENT IS RELEASED FOR THE CONVENIENCE OF THE CONTRACTOR UNDER THE AUTHORITY OF:

K. A. Harutunian — 11-01-22

K. A. HARUTUNIAN, P.E. — DATE
TX LIC NO. 59181

SEE DISCLAIMER FOR LIMITATIONS OF USE.

CONTRACT DOCUMENTS DATED FEBRUARY 28, 2022, AS PART OF THE BIDDING DOCUMENTS (DRAWINGS AND SPECIFICATIONS) AND SUBSEQUENTLY ISSUED ADDENDA HAVE BEEN MERGED INTO ONE CONFORMING SET OF DOCUMENTS FOR THE CONVENIENCE OF THE CONTRACTOR. IF INCONSISTENCIES OR AMBIGUITIES BETWEEN "CONFORMED" DOCUMENTS AND CONTRACT DOCUMENTS ARE FOUND, THE CONTRACT DOCUMENTS SHALL GOVERN.

This document, and the designs incorporated herein, is an instrument of professional service that has been developed, designed and prepared by Harutunian Engineering, Inc., and is not to be used, in whole or in part, for any other project without giving written notice to Harutunian Engineering, Inc.

REV	DATE	BY	DESCRIPTION
			CONFORMED DOCUMENTS

DESIGNED HEI
DRAWN HEI
CHECKED HEI
DATE NOVEMBER 2022

** ORIGINAL SEALED BY K.A. HARUTUNIAN 02-28-22 TX PE 59181 **

HARUTUNIAN ENGINEERING INCORPORATED
ENGINEERING AND ENVIRONMENTAL CONSULTANTS
8100 CROSS PARK DRIVE
AUSTIN, TEXAS 78754
TBPE REGISTRATION NO. F-2408

carollo
TBPELS No. F-882

CITY OF AUSTIN
FOUNDED 1839

CITY OF AUSTIN

WILD HORSE RANCH WWTP EXPANSION

ELECTRICAL

ELECTRICAL TYPICAL DETAILS - 11

VERIFY SCALES
BAR IS ONE INCH ON ORIGINAL DRAWING
0 1"
IF NOT ONE INCH ON THIS SHEET, ADJUST SCALES ACCORDINGLY

JOB NO. 10976A.00
DRAWING NO. 00TE11
SHEET NO. 85 OF 464

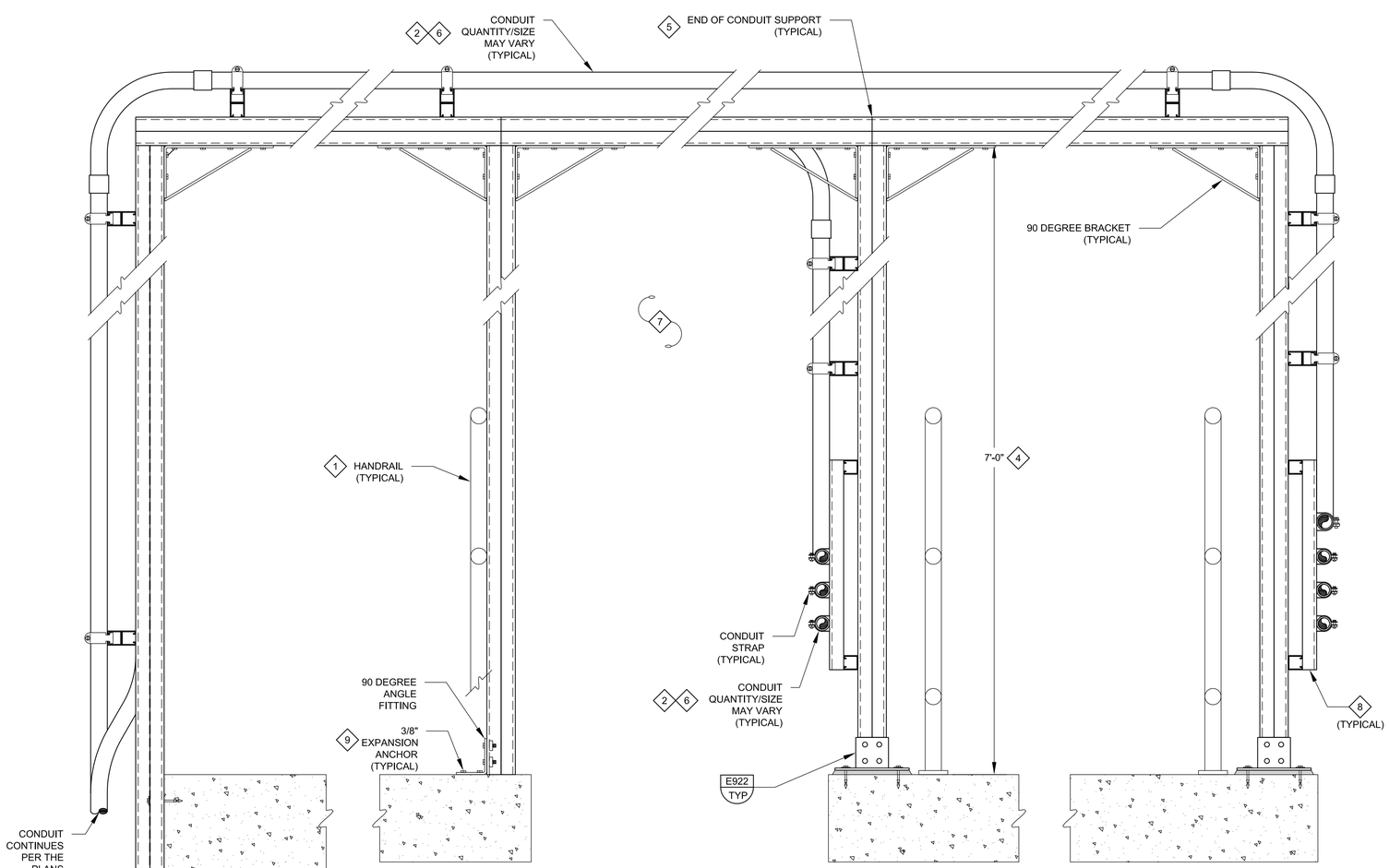

DETAIL NOTES

1. QUANTITY OF CONDUITS WILL VARY.
2. FURNISH AND INSTALL EXPANSION/DEFLECTION FITTING WHERE REQUIRED BY THE CONTRACT DOCUMENTS.
3. THE STRUCTURE TYPE TO WHICH EQUIPMENT AND/OR SUPPORT SYSTEMS SHALL BE MOUNTED MAY VARY. THE EQUIPMENT ANCHOR TYPE SHALL CORRESPOND TO THE TYPE OF STRUCTURE TO WHICH EQUIPMENT AND/OR SUPPORT SYSTEMS ARE ATTACHED. THE DRAWING REFLECTS A SPECIFIC STRUCTURE TYPE WITH CORRESPONDING ANCHOR TYPE AND IS TYPICAL FOR STRUCTURE TYPE SHOWN. TO ATTACH EQUIPMENT/SUPPORT SYSTEMS TO PRE-CAST/CAST-IN-PLACE CONCRETE WALL/FLOOR SLAB STRUCTURE TYPES. FURNISH AND INSTALL BOLT WITH EXPANSION INSERT ANCHOR. TO ATTACH EQUIPMENT/SUPPORT SYSTEMS TO CONCRETE MASONRY UNIT (CMU)/BRICK WALL STRUCTURE TYPE. FURNISH AND INSTALL BOLT WITH EXPANSION ANCHOR. TO ATTACH EQUIPMENT/SUPPORT SYSTEMS TO STEEL STRUCTURE TYPE. FURNISH AND INSTALL BOLTING ASSEMBLY. COORDINATE ATTACHMENT REQUIREMENTS WITH STRUCTURAL/ARCHITECTURAL/METAL BUILDING SYSTEM MANUFACTURER AS APPLICABLE.
4. SECURE TO WALL SIMILAR TO DETAIL E914/[00TE06].

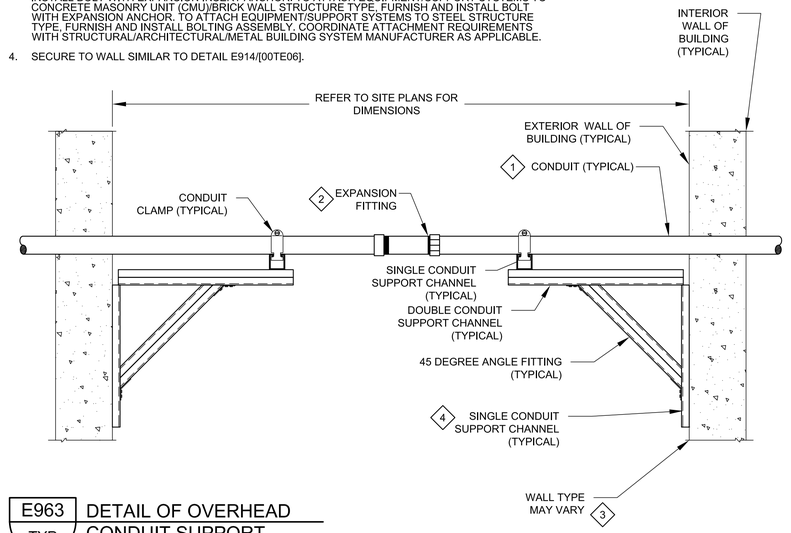

E963 TYP — DETAIL OF OVERHEAD CONDUIT SUPPORT

THIS CONFORMED DOCUMENT IS RELEASED FOR THE CONVENIENCE OF THE CONTRACTOR UNDER THE AUTHORITY OF:

K. A. HARUTUNIAN, P.E. — 11-01-22
TX LIC NO. 59181 — DATE

SEE DISCLAIMER FOR LIMITATIONS OF USE.

CONTRACT DOCUMENTS DATED FEBRUARY 28, 2022, AS PART OF THE BIDDING DOCUMENTS (DRAWINGS AND SPECIFICATIONS) AND SUBSEQUENTLY ISSUED ADDENDA HAVE BEEN MERGED INTO ONE CONFORMING SET OF DOCUMENTS FOR THE CONVENIENCE OF THE CONTRACTOR. IF INCONSISTENCIES OR AMBIGUITIES BETWEEN "CONFORMED" DOCUMENTS AND CONTRACT DOCUMENTS ARE FOUND, THE CONTRACT DOCUMENTS SHALL GOVERN.

DETAIL NOTES

1. REFER TO STRUCTURAL FOR ADDITIONAL INFORMATION.
2. FURNISH AND INSTALL PROPOSED CONDUIT/WIRE/MOUNTING HARDWARE ASSEMBLY AND NECESSARY MOUNTING CHANNEL AND RELATED HARDWARE TO SECURE CONDUIT/CHANNEL TO CONDUIT SUPPORT STRUCTURE.
3. SIDE VIEW SHOWN FOR PURPOSE OF CLARITY. ONLY ONE SIDE OF SUPPORT STRUCTURE IS SHOWN. EACH RACK INCLUDES A MINIMUM OF TWO VERTICAL MEMBERS WITH HORIZONTAL BRACING MEMBERS TO COMPRISE A LADDER TYPE SUPPORT ASSEMBLY.
4. SUPPORT STRUCTURE CONFIGURATION WILL VARY AS REQUIRED. COORDINATE EXACT CONFIGURATION OF CONDUIT SUPPORT STRUCTURE WITH PROCESS/MECHANICAL EQUIPMENT, AND THE OWNER TO OPTIMIZE WALKWAY SPACE AND ACCESS TO EQUIPMENT. COORDINATE HEIGHT AND WIDTH OF OVERHEAD ASSEMBLY WITH OWNER. ALLOW A MINIMUM OF 7'-0" OF CLEAR SPACE BELOW ASSEMBLY.
5. DOUBLE CONDUIT SUPPORT CHANNEL SHALL BE ONE CONTINUOUS PIECE. DO NOT USE CHANNEL COUPLINGS TO FASTEN TWO PIECES TOGETHER. SECURE SUPPORT CHANNEL IN PLACE WITH APPROPRIATE HARDWARE, ANCHORS AND FITTINGS, AS APPLICABLE FOR A SECURE INSTALLATION. UTILIZE HORIZONTAL AND VERTICAL SECTIONS OF SUPPORT RACK ASSEMBLY FOR SUPPORT OF ASSOCIATED CONDUIT/WIRE SYSTEM AS APPLICABLE.
6. CONDUIT SIZES/QUANTITY SHOWN FOR ILLUSTRATION ONLY. REFER TO PLANS AND CONDUIT/WIRE SCHEDULE FOR REQUIRED SIZE/QUANTITY. CONDUIT/WIRE CONNECTIONS NOT SHOWN FOR CLARITY. REFER TO PLANS FOR ADDITIONAL INFORMATION.
7. COORDINATE/CALCULATE TOTAL WEIGHT LOAD OF CONDUIT/WIRE/CABLES/ETC. FURNISH AND INSTALL ADDITIONAL SUPPORT AS NECESSARY, IN ORDER TO MAINTAIN A MAXIMUM OF 50 PERCENT OF MANUFACTURER'S STATED WEIGHT SUPPORT CAPACITY.
8. SINGLE CONDUIT SUPPORT CHANNEL. THE LENGTH OF CHANNEL SHALL BE AS REQUIRED.
9. THE STRUCTURE TYPE TO WHICH EQUIPMENT AND/OR SUPPORT SYSTEMS SHALL BE MOUNTED MAY VARY. THE EQUIPMENT ANCHOR TYPE SHALL CORRESPOND TO THE TYPE OF STRUCTURE TO WHICH EQUIPMENT AND/OR SUPPORT SYSTEMS ARE ATTACHED. THE DRAWING REFLECTS A SPECIFIC STRUCTURE TYPE WITH CORRESPONDING ANCHOR TYPE AND IS TYPICAL FOR STRUCTURE TYPE SHOWN. TO ATTACH EQUIPMENT/SUPPORT SYSTEMS TO PRE-CAST/CAST-IN-PLACE CONCRETE WALL/FLOOR SLAB STRUCTURE TYPES. FURNISH AND INSTALL BOLT WITH EXPANSION INSERT ANCHOR. TO ATTACH EQUIPMENT/SUPPORT SYSTEMS TO CONCRETE MASONRY UNIT (CMU)/BRICK WALL STRUCTURE TYPE. FURNISH AND INSTALL BOLT WITH EXPANSION ANCHOR. TO ATTACH EQUIPMENT/SUPPORT SYSTEMS TO STEEL STRUCTURE TYPE. FURNISH AND INSTALL BOLTING ASSEMBLY. COORDINATE ATTACHMENT REQUIREMENTS WITH STRUCTURAL/ARCHITECTURAL/METAL BUILDING SYSTEM MANUFACTURER AS APPLICABLE.

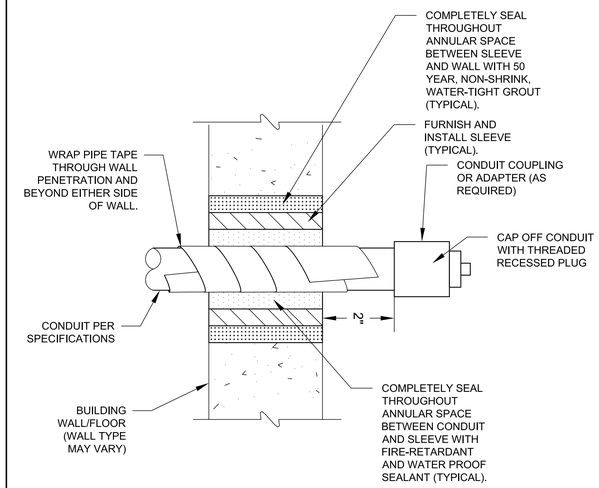

E964 TYP — DETAIL OF OVERHEAD CONDUIT SUPPORT

3 E945 TYP — TYPICAL CONDUIT SUPPORT STRUCTURE DETAIL ABOVE BASIN WALKWAY

This document, and the designs incorporated herein, is an instrument of professional service that has been developed, designed and prepared by Harutunian Engineering, Inc., and is not to be used, in whole or in part, for any other project without giving written notice to Harutunian Engineering, Inc.

REV	DATE	BY	DESCRIPTION
			CONFORMED DOCUMENTS

DESIGNED HEI | DRAWN HEI | CHECKED HEI | DATE NOVEMBER 2022

** ORIGINAL SEALED BY K.A. HARUTUNIAN 02-28-22 TX PE 59181 **

HARUTUNIAN ENGINEERING INCORPORATED
ENGINEERING AND ENVIRONMENTAL CONSULTANTS
8100 CROSS PARK DRIVE AUSTIN, TEXAS 78754
TBPE REGISTRATION NO. F-2408

carollo — TBPELS No. F-882

CITY OF AUSTIN — FOUNDED 1839

CITY OF AUSTIN

CITY OF AUSTIN
WILD HORSE RANCH WWTP EXPANSION
ELECTRICAL
ELECTRICAL TYPICAL DETAILS - 12

VERIFY SCALES
BAR IS ONE INCH ON ORIGINAL DRAWING
0 1"
IF NOT ONE INCH ON THIS SHEET, ADJUST SCALES ACCORDINGLY

JOB NO. 10976A.00
DRAWING NO. 00TE12
SHEET NO. 86 OF 464

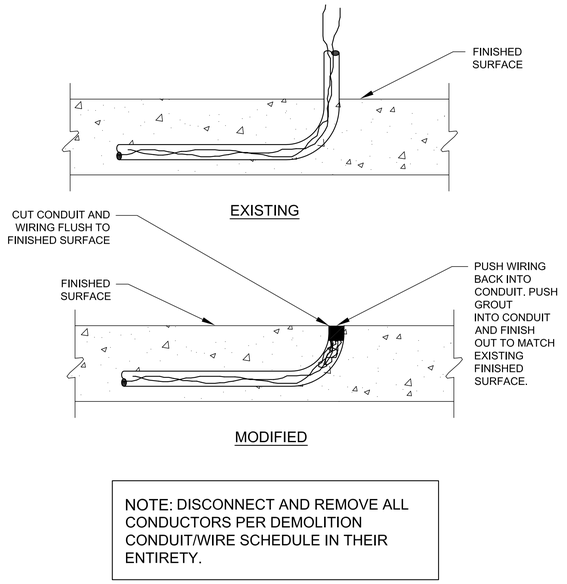

NOTE: DISCONNECT AND REMOVE ALL CONDUCTORS PER DEMOLITION CONDUIT/WIRE SCHEDULE IN THEIR ENTIRETY.

E946 TYP — MODIFICATION TO EXISTING CONDUIT STUB UPS

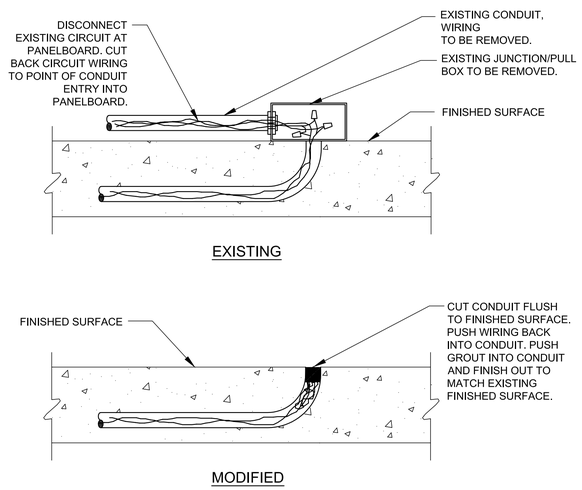

E947 TYP — MODIFICATION TO EXISTING CONDUIT STUB UP TO SURFACE MOUNTED BOX

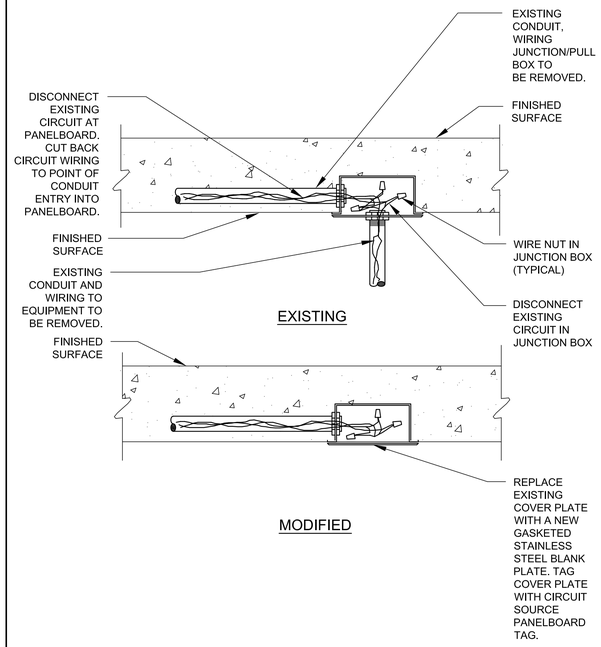

E948 TYP — MODIFICATION TO RECESSED ELECTRICAL JUNCTION/PULL BOX

DETAIL NOTES

1. PROVIDE A MINIMUM OF 10" SPACE BETWEEN CABLE CLAMPS FOR INSTALLATION OF FUTURE 15kV CABLE CLAMP.
2. FOR 15kV CONDUCTOR INSTALLATION, FASTEN WITH PORCELAIN CABLE CLAMP WITH DIMENSION "A" SUITABLE FOR (3) 15kV SHIELDED CONDUCTORS AND (1) 600V INSULATED GROUND CONDUCTOR GROUPED TOGETHER AND WRAPPED WITH FIRE TAPE COATING. REFER TO THE APPROPRIATE CONDUIT/WIRE SCHEDULE FOR CONDUCTOR SIZE.
3. FOR GROUNDING CONDUCTORS, FASTEN WITH PORCELAIN CABLE CLAMP WITH DIMENSION "B" SUITABLE FOR (3) BARE #250 KCMIL GROUNDING CONDUCTORS AND (4) BARE #6 AWG GROUNDING CONDUCTORS.
4. CALCULATE TOTAL WEIGHT LOAD OF CONDUIT/WIRE/CABLES/ETC. AT EACH LOCATION OF SUPPORT. FURNISH AND INSTALL ADDITIONAL SUPPORT AS NECESSARY, IN ORDER TO MAINTAIN A MAXIMUM OF 50 PERCENT OF MANUFACTURERS STATED WEIGHT SUPPORT CAPACITY.

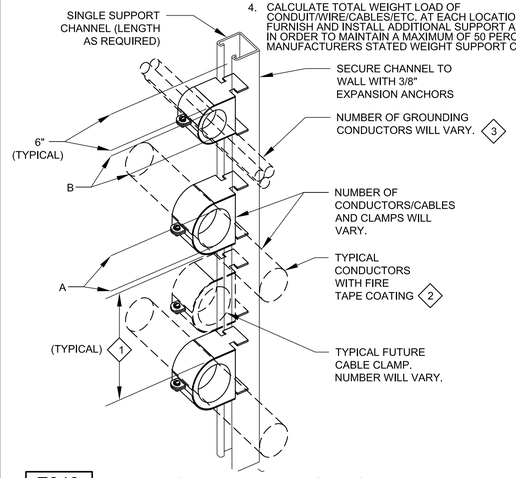

4 E949 TYP — WALL MOUNTED MANHOLE OR HANDHOLE CABLE RACK DETAIL

DETAIL NOTES

1. PROVIDE A MINIMUM OF 10" SPACE BETWEEN CABLE CLAMPS FOR INSTALLATION OF FUTURE 15kV CABLE CLAMP.
2. FOR 15kV CONDUCTOR INSTALLATION, FASTEN WITH PORCELAIN CABLE CLAMP WITH DIMENSION "A" SUITABLE FOR (3) 15kV SHIELDED CONDUCTORS AND (1) 600V INSULATED GROUND CONDUCTOR GROUPED TOGETHER AND WRAPPED WITH FIRE TAPE COATING. REFER TO THE APPROPRIATE CONDUIT/WIRE SCHEDULE FOR CONDUCTOR SIZE.
3. CALCULATE TOTAL WEIGHT LOAD OF CONDUIT/WIRE/CABLES/ETC. AT EACH LOCATION OF SUPPORT. FURNISH AND INSTALL ADDITIONAL SUPPORT AS NECESSARY, IN ORDER TO MAINTAIN A MAXIMUM OF 50 PERCENT OF MANUFACTURERS STATED WEIGHT SUPPORT CAPACITY.
4. SUPPORT CHANNEL BRACKET IS OF 12GA CONSTRUCTION FOR A MINIMUM UNIFORM DESIGN LOAD OF 300 LBS.

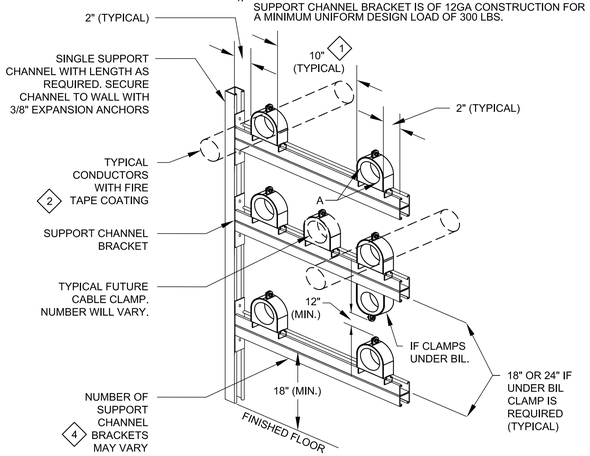

3 E950 TYP — WALL MOUNTED MANHOLE CABLE RACK DETAIL

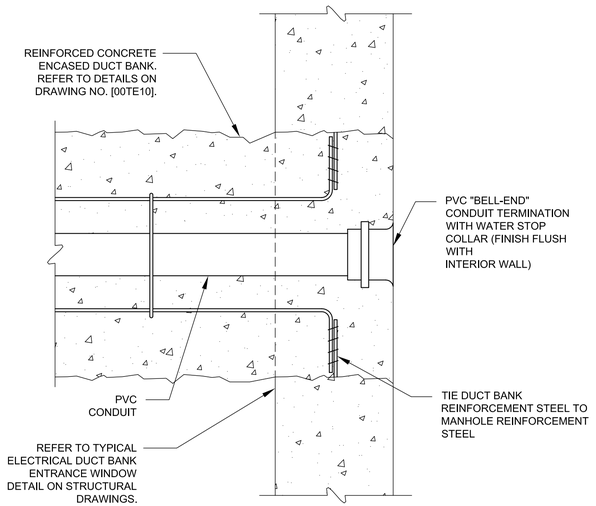

E951 TYP — CONDUIT ENTRY INTO EXTERIOR MANHOLE/CABLE VAULT

DETAIL NOTES

1. MINIMUM MANHOLE COVER SIZE IS INDICATED HERE. REFER TO THE MANHOLE PLAN, ELEVATION, AND STRUCTURAL DRAWINGS TO DETERMINE THE EXACT SIZE OF MANHOLE COVER REQUIRED FOR EACH INDIVIDUAL MANHOLE.

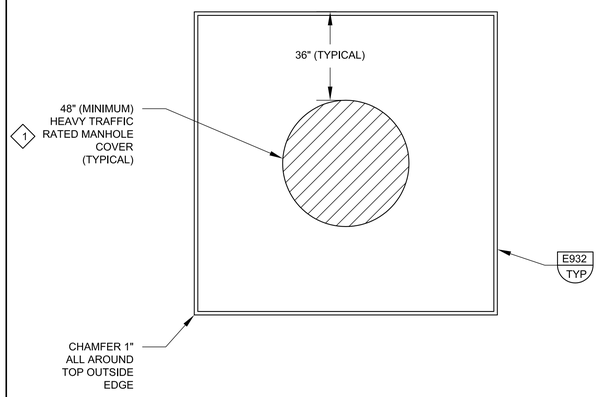

E952 TYP — MANHOLE HOUSEKEEPING PAD

THIS CONFORMED DOCUMENT IS RELEASED FOR THE CONVENIENCE OF THE CONTRACTOR UNDER THE AUTHORITY OF:

K. A. Harutunian — 11-01-22

K. A. HARUTUNIAN, P.E. — DATE
TX LIC NO. 59181

SEE DISCLAIMER FOR LIMITATIONS OF USE.

CONTRACT DOCUMENTS DATED FEBRUARY 28, 2022, AS PART OF THE BIDDING DOCUMENTS (DRAWINGS AND SPECIFICATIONS) AND SUBSEQUENTLY ISSUED ADDENDA HAVE BEEN MERGED INTO ONE CONFORMING SET OF DOCUMENTS FOR THE CONVENIENCE OF THE CONTRACTOR. IF INCONSISTENCIES OR AMBIGUITIES BETWEEN "CONFORMED" DOCUMENTS AND CONTRACT DOCUMENTS ARE FOUND, THE CONTRACT DOCUMENTS SHALL GOVERN.

This document, and the designs incorporated herein, is an instrument of professional service that has been developed, designed and prepared by Harutunian Engineering, Inc., and is not to be used, in whole or in part, for any other project without giving written notice to Harutunian Engineering, Inc.

REV	DATE	BY	DESCRIPTION
			CONFORMED DOCUMENTS

DESIGNED HEI
DRAWN HEI
CHECKED HEI
DATE NOVEMBER 2022

** ORIGINAL SEALED BY K.A. HARUTUNIAN 02-28-22 TX PE 59181 **

HARUTUNIAN ENGINEERING INCORPORATED
ENGINEERING AND ENVIRONMENTAL CONSULTANTS
8100 CROSS PARK DRIVE
AUSTIN, TEXAS 78754
TBPE REGISTRATION NO. F-2408
TBPELS No. F-882

CITY OF AUSTIN
WILD HORSE RANCH WWTP EXPANSION
ELECTRICAL
ELECTRICAL TYPICAL DETAILS - 13

VERIFY SCALES
BAR IS ONE INCH ON ORIGINAL DRAWING
0 1"
IF NOT ONE INCH ON THIS SHEET, ADJUST SCALES ACCORDINGLY

JOB NO. 10976A.00
DRAWING NO. 00TE13
SHEET NO. 87 OF 464

DETAIL NOTES

1. LOCATE GROUNDING BUS BAR WITHIN 18" OF CEILING. CLOSELY AND CAREFULLY COORDINATE LOCATION OF GROUNDING BUS BAR WITH CORRESPONDING MANHOLE PLAN/ELEVATION DRAWING, AS APPLICABLE.
2. LOCATION AND SIZES OF DUCT BANK PENETRATIONS WILL VARY.

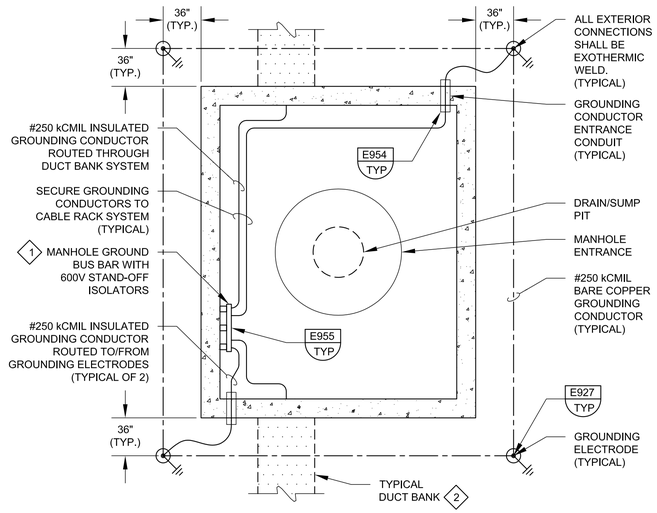

E953 TYP — MANHOLE/HANDHOLE GROUNDING SYSTEM DETAIL

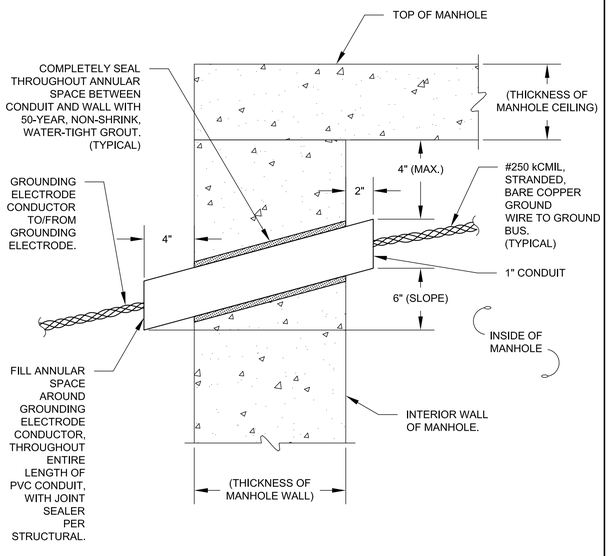

E954 TYP — PRECAST MANHOLE/HANDHOLE GROUNDING CONDUCTOR ENTRANCE DETAIL

DETAIL NOTES

1. LOCATE GROUNDING BUS BAR WITHIN 18" OF CEILING. CLOSELY AND CAREFULLY COORDINATE LOCATION OF GROUNDING BUS BAR WITH CORRESPONDING MANHOLE PLAN/ELEVATION DRAWING, AS APPLICABLE.

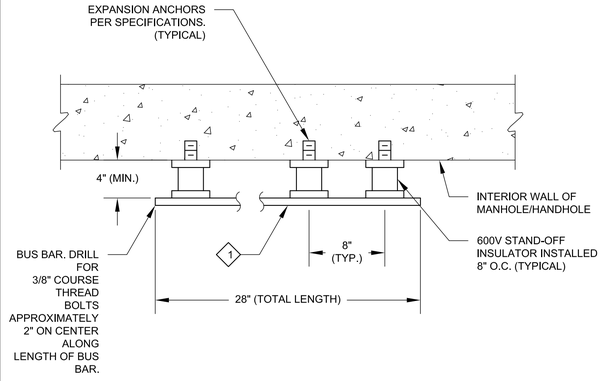

E955 TYP — MANHOLE/HANDHOLE/CABLE CLOSET GROUND BUS ASSEMBLY DETAIL

DETAIL NOTES

1. #250 KCMIL GROUNDING CONDUCTOR (NUMBER OF CONDUCTORS VARY) CONTINUES AROUND PERIMETER OF MANHOLE/HANDHOLE TO/FROM GROUNDING BUS BAR ASSEMBLY.
2. 1-#6 AWG GROUNDING CONDUCTOR, WITH DAISY CHAIN TERMINATION CONFIGURATION, CONTINUES TO/FROM NEXT CABLE INSULATOR/CLAMP ASSEMBLY AND/OR MANHOLE/HANDHOLE GROUNDING BUS BAR ASSEMBLY. REFER TO APPROPRIATE DETAIL ON THIS SHEET FOR SPECIFIC TERMINATION/ATTACHMENT INFORMATION AT EACH LOCATION IN MANHOLE/HANDHOLE. EACH CABLE/CIRCUIT TO HAVE A SEPARATE AND DEDICATED GROUNDING CONDUCTOR TERMINATED AT GROUNDING BUS.

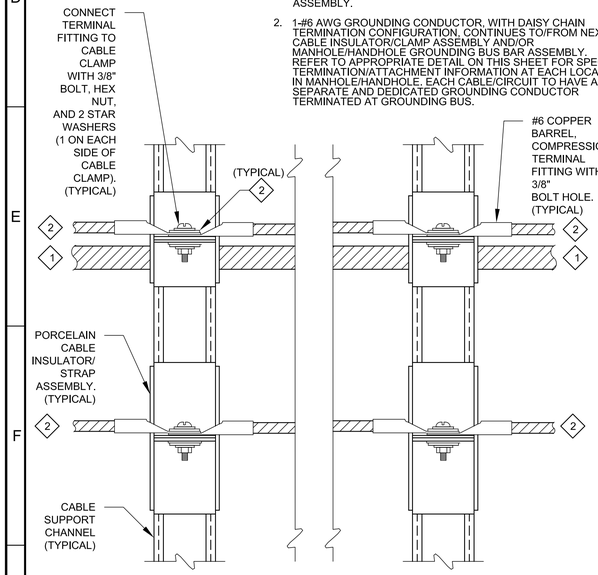

E956 TYP — MANHOLE/HANDHOLE/CABLE CLOSET CABLE RACK GROUNDING DETAIL

DETAIL NOTES

1. CABLE SUPPORT CHANNEL GROUNDING CONDUCTOR CONTINUES TO/FROM EACH SEPARATE CABLE SUPPORT CHANNEL WITHIN CONFINES OF MANHOLE/HANDHOLE, THEN TO/FROM GROUNDING BUS BAR.

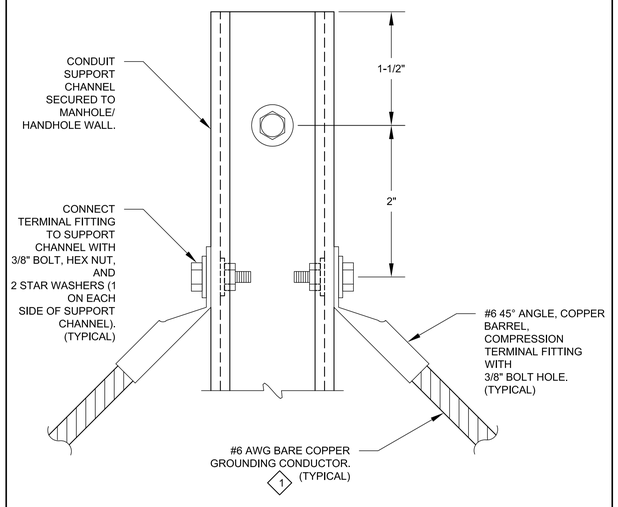

E957 TYP — MANHOLE/HANDHOLE/CABLE CLOSET BACK/SUPPORT CHANNEL GROUNDING DETAIL

DETAIL NOTES

1. NUMBER OF GROUNDING CONDUCTORS AND COMPRESSION TERMINALS ATTACHED TO CABLE CLAMP WILL VARY.

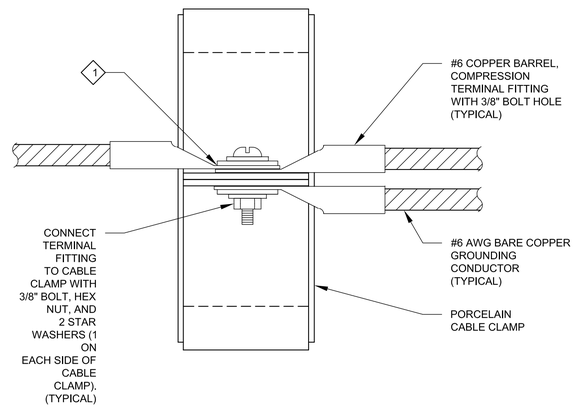

E958 TYP — CABLE CLAMP GROUNDING DETAIL

THIS CONFORMED DOCUMENT IS RELEASED FOR THE CONVENIENCE OF THE CONTRACTOR UNDER THE AUTHORITY OF:

K. A. HARUTUNIAN, P.E.
TX LIC NO. 59181

11-01-22
DATE

SEE DISCLAIMER FOR LIMITATIONS OF USE.

CONTRACT DOCUMENTS DATED FEBRUARY 28, 2022, AS PART OF THE BIDDING DOCUMENTS (DRAWINGS AND SPECIFICATIONS) AND SUBSEQUENTLY ISSUED ADDENDA HAVE BEEN MERGED INTO ONE CONFORMING SET OF DOCUMENTS FOR THE CONVENIENCE OF THE CONTRACTOR. IF INCONSISTENCIES OR AMBIGUITIES BETWEEN "CONFORMED" DOCUMENTS AND CONTRACT DOCUMENTS ARE FOUND, THE CONTRACT DOCUMENTS SHALL GOVERN.

This document, and the designs incorporated herein, is an instrument of professional service that has been developed, designed and prepared by Harutunian Engineering, Inc., and is not to be used, in whole or in part, for any other project without giving written notice to Harutunian Engineering, Inc.

REV	DATE	BY	DESCRIPTION
			CONFORMED DOCUMENTS

DESIGNED HEI
DRAWN HEI
CHECKED HEI
DATE NOVEMBER 2022

** ORIGINAL SEALED BY K.A. HARUTUNIAN 02-28-22 TX PE 59181 **

HARUTUNIAN ENGINEERING INCORPORATED
ENGINEERING AND ENVIRONMENTAL CONSULTANTS
8100 CROSS PARK DRIVE
AUSTIN, TEXAS 78754
TBPE REGISTRATION NO. F-2408

carollo
TBPELS No. F-882

CITY OF AUSTIN

CITY OF AUSTIN
WILD HORSE RANCH WWTP EXPANSION
ELECTRICAL
ELECTRICAL TYPICAL DETAILS - 14

VERIFY SCALES
BAR IS ONE INCH ON ORIGINAL DRAWING
0 1"
IF NOT ONE INCH ON THIS SHEET, ADJUST SCALES ACCORDINGLY

JOB NO. 10976A.00
DRAWING NO. 00TE14
SHEET NO. 88 OF 464

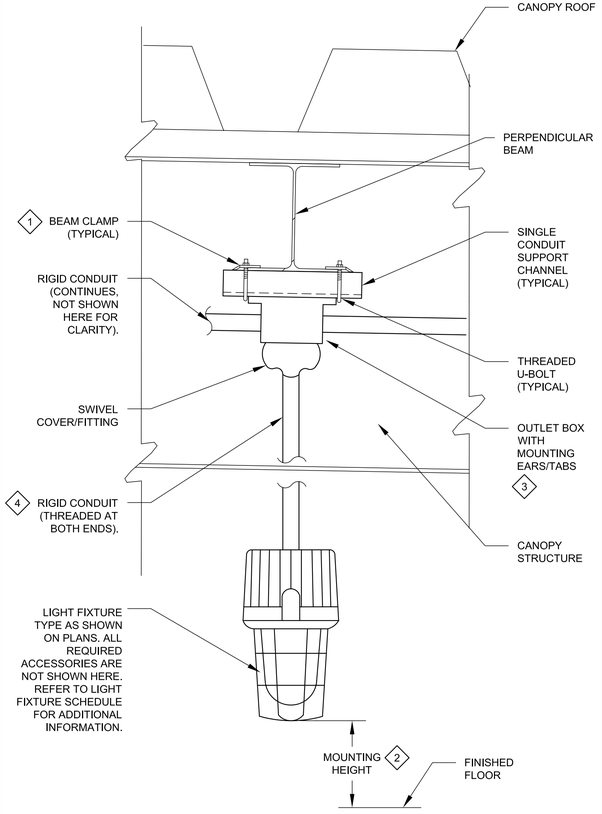

E959 TYP — LIGHT FIXTURE CANOPY CEILING MOUNTING DETAIL

DETAIL NOTES

1. THE STRUCTURE TYPE TO WHICH EQUIPMENT AND/OR SUPPORT SYSTEMS SHALL BE MOUNTED MAY VARY. THE EQUIPMENT ANCHOR TYPE SHALL CORRESPOND TO THE TYPE OF STRUCTURE TO WHICH THE EQUIPMENT AND/OR SUPPORT SYSTEMS ARE ATTACHED. THE DRAWING REFLECTS A SPECIFIC STRUCTURE TYPE WITH CORRESPONDING ANCHOR TYPE AND IS TYPICAL FOR THE STRUCTURE TYPE SHOWN. TO ATTACH EQUIPMENT/SUPPORT SYSTEMS TO PRE-CAST/CAST-IN-PLACE CONCRETE WALL/FLOOR SLAB STRUCTURE TYPES, FURNISH AND INSTALL BOLT WITH EPOXY INSERT ANCHOR. TO ATTACH EQUIPMENT/SUPPORT SYSTEMS TO A CONCRETE MASONRY UNIT (CMU)/BRICK WALL STRUCTURE TYPE, FURNISH AND INSTALL BOLT WITH EXPANSION ANCHOR. TO ATTACH EQUIPMENT/SUPPORT SYSTEMS TO STEEL STRUCTURE TYPE, FURNISH AND INSTALL BOLTING ASSEMBLY. COORDINATE ATTACHMENT REQUIREMENTS WITH STRUCTURAL AND SPECIFICATIONS.
2. MOUNTING HEIGHT AS SHOWN ON LIGHTING PLANS.
3. FURNISH AND INSTALL LIGHT FIXTURE, PENDANT, CONDUIT HUB, AND MOUNTING HARDWARE FOR A SAFE AND SOUND INSTALLATION. COORDINATE WITH OWNER AND CANOPY MANUFACTURER FOR ADDITIONAL INFORMATION.
4. COORDINATE WITH LIGHT FIXTURE MANUFACTURER, OWNER AND STRUCTURAL TO DETERMINE MOUNTING HEIGHT OF LIGHT FIXTURE AND LENGTH OF CONDUIT. REFER TO PLANS FOR ADDITIONAL INFORMATION.

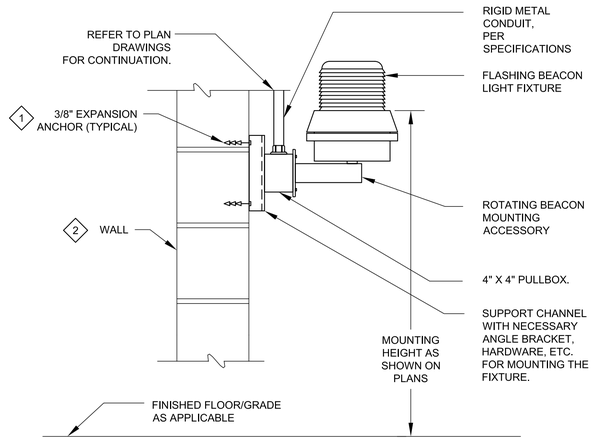

E960 TYP — BEACON MOUNTING DETAIL

DETAIL NOTES

1. SUPPORT CHANNEL FROM STRUCTURE SIMILAR TO DETAIL E914 ON DRAWING NO. [00TE06].
2. THE STRUCTURE TYPE TO WHICH EQUIPMENT AND/OR SUPPORT SYSTEMS SHALL BE MOUNTED MAY VARY. THE EQUIPMENT ANCHOR TYPE SHALL CORRESPOND TO THE TYPE OF STRUCTURE TO WHICH THE EQUIPMENT AND/OR SUPPORT SYSTEMS ARE ATTACHED. THE DRAWING REFLECTS A SPECIFIC STRUCTURE TYPE WITH CORRESPONDING ANCHOR TYPE AND IS TYPICAL FOR THE STRUCTURE TYPE SHOWN. TO ATTACH EQUIPMENT/SUPPORT SYSTEMS TO PRE-CAST/CAST-IN-PLACE CONCRETE WALL/FLOOR SLAB STRUCTURE TYPES, FURNISH AND INSTALL BOLT WITH EXPANSION INSERT ANCHOR. TO ATTACH EQUIPMENT/SUPPORT SYSTEMS TO A CONCRETE MASONRY UNIT (CMU)/BRICK WALL STRUCTURE TYPE, FURNISH AND INSTALL BOLT WITH EXPANSION ANCHOR. TO ATTACH EQUIPMENT/SUPPORT SYSTEMS TO STEEL STRUCTURE TYPE, FURNISH AND INSTALL BOLTING ASSEMBLY. COORDINATE ATTACHMENT REQUIREMENTS WITH STRUCTURAL/ARCHITECTURAL AND APPLICABLE DIVISION 5 SPECIFICATION SECTIONS.

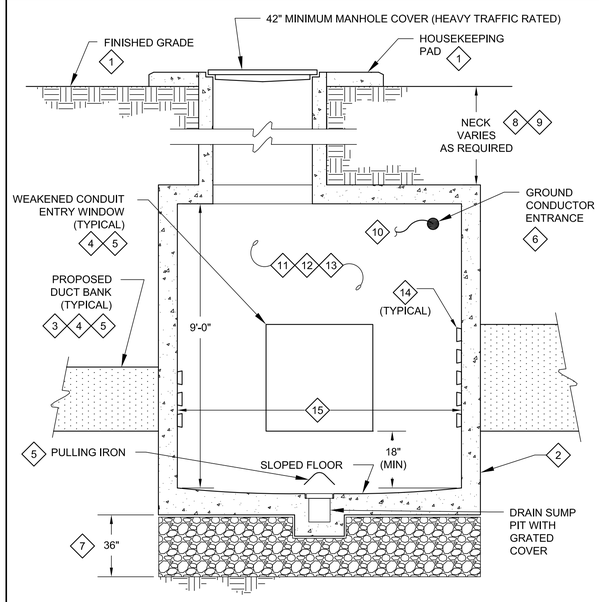

E961 TYP — TYPICAL MANHOLE ELEVATION INSTALLATION DETAIL

DETAIL NOTES

1. COORDINATE LOCATION OF FINISHED GRADE (PARKING LOT/SIDEWALK/ETC.) WITH SITE/CIVIL DRAWINGS. SLOPE FINISHED GRADE AWAY FROM LID/PAD TO PREVENT WATER ACCUMULATION IN VICINITY OF LID/PAD.
2. THE PROPOSED HANDHOLE/MANHOLE SHALL BE MADE OF STEEL REINFORCED CONCRETE WITH 4500 POUNDS PER SQUARE INCH DESIGN STRENGTH MEASURED AT 28 DAYS AND CONCRETE STEEL REINFORCEMENT SHALL COMPLY WITH ASTM A-615 GRADE 60 AT MINIMUM. FURNISH AND INSTALL MANHOLE/HANDHOLE WITH MINIMUM DIMENSIONS AS SHOWN IN THE "PRE-CAST MANHOLE MINIMUM DIMENSION IDENTIFICATION TABLE" SHOWN ON THIS DRAWING. MANHOLE/HANDHOLE SHALL BE FURNISHED WITH HEAVY TRAFFIC RATED LID AND OTHER FEATURES AS SHOWN. PROPOSED MANHOLE/HANDHOLE SHALL BE AS MANUFACTURED BY OLDCASTLE OR APPROVED EQUAL. SUBMIT SHOP DRAWINGS AND O&M MANUALS PER SECTION 16150.
3. PROPOSED DUCT BANK SHOWN FOR ILLUSTRATION PURPOSE ONLY. PROPOSED DUCT BANK QUANTITY/SIZE/LOCATION MAY VARY. REFER TO SITE PLAN FOR CONTINUATION AND ADDITIONAL INFORMATION. SPACE AND ENCASE IN REINFORCED CONCRETE PER THE DETAILS ON DRAWING [00TE10]. FILL/SEAL ALL VOIDS BETWEEN ALL CONDUIT ENTRIES AND BETWEEN CONDUITS AND MANHOLE/HANDHOLE STRUCTURE WITH 50 YEAR NON-SHRINK WATER TIGHT GROUT.
4. INTERFACE PROPOSED DUCT BANK WITH STRUCTURAL WALL PER STRUCTURAL DRAWINGS/SPECIFICATIONS. STRUCTURAL REBAR NOT SHOWN. CONTRACTOR SHALL TIE STRUCTURAL REBAR OF MANHOLE/HANDHOLE TO DUCT BANK REINFORCING STEEL SYSTEM. COORDINATE WITH STRUCTURAL.
5. WINDOW SIZE AND LOCATION SHOWN HERE ARE CONCEPTUAL. SOME WINDOWS CAN BE LOCATED NEAR ADJACENT WALLS. CONTRACTOR SHALL ADJUST SIZE AND LOCATION OF WINDOW ALONG WALL AS NEEDED TO ACCOUNT FOR FIELD CONDITIONS. PULLING IRONS SHALL BE TREATED LIKEWISE. CLOSELY AND CAREFULLY COORDINATE CONDUIT ENTRY WINDOW LOCATIONS WITH THE DUCT BANK BURIAL DEPTH AND MANHOLE/HANDHOLE MANUFACTURER. ALIGNMENT AND ORIENTATION OF WINDOWS AND CABLES SHALL ALLOW FOR AN UNOBSTRUCTED PERSONNEL LANDING AREA INSIDE OF MANHOLE/HANDHOLE AND SHALL BE COORDINATED WITH ACCESS LID/HATCH. MANHOLE/ HANDHOLE SHALL BE PROVIDED WITH A MINIMUM OF ONE WINDOW KNOCKOUT PER SIDE FOR PRESENT OR FUTURE USE. ALL PROPOSED WINDOWS MAY NOT BE USED IN THIS CONTRACT.
6. FURNISH AND INSTALL GROUNDING NETWORK FOR MANHOLE/HANDHOLE PER DETAIL E921 ON DRAWING NO. [00TE05]. GROUNDING NOT SHOWN FOR CLARITY.
7. FURNISH AND INSTALL 36" BED OF 3/8" WASHED GRAVEL ACROSS THE FULL WIDTH AND DEPTH OF MANHOLE/HANDHOLE.
8. EXACT MANHOLE ELEVATION IS NOT SHOWN HERE. COORDINATE ELEVATION OF MANHOLE WITH THE CIVIL/STRUCTURAL/AND ELECTRICAL DRAWINGS, ETC. FURNISH AND INSTALL MANHOLE ACCESS NECK AS REQUIRED TO ACCOMMODATE FOR THE ACTUAL MANHOLE ELEVATION. REFER TO SPECIFICATIONS FOR REQUIRED DUCT BANK SLOPE.
9. NECK OF MANHOLE IS 24" UNLESS CONDITIONS ARE SUCH THAT LENGTH MUST VARY. COORDINATE NECK LENGTH WITH STRUCTURAL/CIVIL. SHOULD THE NECK LENGTH INCREASE, MANHOLE ENTRANCE DIAMETER SHALL BE INCREASED AS NECESSARY TO PERMIT A MAN WITH A LADDER TO SAFELY ENTER THE MANHOLE. IN RESIZING NECK AND COVER DIAMETERS, CONSIDERATION MUST BE GIVEN TO A SAFE LADDER ANGLE TO PERMIT AN UNOBSTRUCTED ENTRANCE BY AN INDIVIDUAL. ASSUME LADDER LEGS AT CONTACT TO FLOOR ARE SET NO LESS THAN 36" FROM BACK WALL OR 12" FROM FRONT EDGE OF CABLE RACKING IN MANHOLE SUCH THAT AN INDIVIDUAL CAN EASILY BACK OFF OR GO UP THE LADDER. ADDITIONALLY, LENGTH AND WIDTH OF MANHOLE SHALL BE INCREASED TO FACILITATE SAFE PLACEMENT OF LADDER.
10. ROUTE AND SECURE GROUND CABLE ALONG WALL 6" BELOW MANHOLE/HANDHOLE CEILING AND CONTINUE TO TERMINATION AT GROUND BUS.
11. CONDUCTORS/CABLES ROUTED THROUGH MANHOLE/ HANDHOLE SHALL BE TAGGED IN MANHOLE/HANDHOLE PER SPECIFICATIONS WITH TAG NAME DESIGNATED ON DRAWINGS.
12. BENDING RADIUS OF CABLES SHALL NOT BE LESS THAN CABLE MANUFACTURES RECOMMENDATION.
13. SUPPORT CHANNELS AND CABLE CLAMPS NOT SHOWN FOR CLARITY. CONFIGURATION OF CABLE SUPPORT SYSTEM WILL VARY DEPENDING ON QUANTITY AND ROUTING OF CABLES/CONDUCTORS. SECURE SUPPORT CHANNELS TO WALL MANHOLE/HANDHOLE WITH 3/8" EXPANSION INSERT ANCHORS PER SPECIFICATIONS.
14. FURNISH AND INSTALL FACTORY BELL-END FITTINGS ON ALL CONDUIT ENTRIES INTO MANHOLE/HANDHOLE.
15. REFER TO DETAIL E962 ON THIS DRAWING FOR MANHOLE INTERNAL DIMENSIONS.

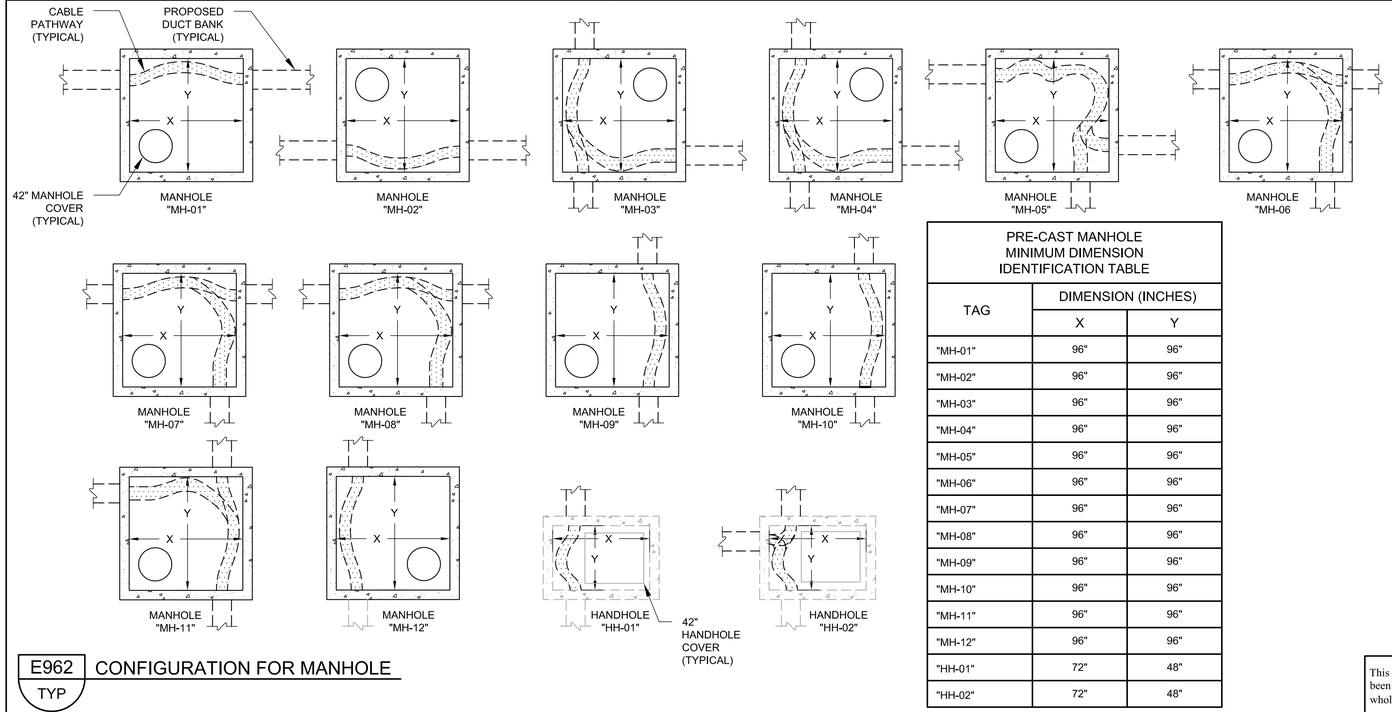

E962 TYP — CONFIGURATION FOR MANHOLE

PRE-CAST MANHOLE MINIMUM DIMENSION IDENTIFICATION TABLE

TAG	DIMENSION (INCHES)	
	X	Y
"MH-01"	96"	96"
"MH-02"	96"	96"
"MH-03"	96"	96"
"MH-04"	96"	96"
"MH-05"	96"	96"
"MH-06"	96"	96"
"MH-07"	96"	96"
"MH-08"	96"	96"
"MH-09"	96"	96"
"MH-10"	96"	96"
"MH-11"	96"	96"
"MH-12"	96"	96"
"HH-01"	72"	48"
"HH-02"	72"	48"

GENERAL NOTES:

1. ORIENTATION OF MANHOLE/DUCT BANK MAY VARY FROM ORIENTATION ON SITE PLAN.
2. REFER TO TYPICAL MANHOLE RACKING DETAILS ON THIS SHEET.
3. REFER TO TYPICAL MANHOLE DETAIL ON THIS SHEET.
4. LOCATIONS AND SIZES OF DUCT BANK PENETRATIONS WILL VARY.
5. REFER TO TYPICAL MANHOLE GROUNDING SYSTEM DETAILS ON SHEET [00TE05].
6. DUCT BANK/DUCT BANKS SHALL NOT BE INSTALLED CLOSER THAN 24" FROM MANHOLE COVER.
7. MANHOLE SHALL NOT BE INSTALLED CLOSER THAN 48" FROM ANOTHER MANHOLE.
8. LOCATION OF MANHOLE COVER MAY VARY.

THIS CONFORMED DOCUMENT IS RELEASED FOR THE CONVENIENCE OF THE CONTRACTOR UNDER THE AUTHORITY OF:

K. A. HARUTUNIAN, P.E. — 11-01-22
TX LIC NO. 59181 — DATE

SEE DISCLAIMER FOR LIMITATIONS OF USE.

CONTRACT DOCUMENTS DATED FEBRUARY 28, 2022, AS PART OF THE BIDDING DOCUMENTS (DRAWINGS AND SPECIFICATIONS) AND SUBSEQUENTLY ISSUED ADDENDA HAVE BEEN MERGED INTO ONE CONFORMING SET OF DOCUMENTS FOR THE CONVENIENCE OF THE CONTRACTOR. IF INCONSISTENCIES OR AMBIGUITIES BETWEEN "CONFORMED" DOCUMENTS AND CONTRACT DOCUMENTS ARE FOUND, THE CONTRACT DOCUMENTS SHALL GOVERN.

This document, and the designs incorporated herein, is an instrument of professional service that has been developed, designed and prepared by Harutunian Engineering, Inc., and is not to be used, in whole or in part, for any other project without giving written notice to Harutunian Engineering, Inc.

REV	DATE	BY	DESCRIPTION
			CONFORMED DOCUMENTS

DESIGNED HEI
DRAWN HEI
CHECKED HEI
DATE NOVEMBER 2022

** ORIGINAL SEALED BY K.A. HARUTUNIAN 02-28-22 TX PE 59181 **

HARUTUNIAN ENGINEERING INCORPORATED
ENGINEERING AND ENVIRONMENTAL CONSULTANTS
8100 CROSS PARK DRIVE
AUSTIN, TEXAS 78754
TBPE REGISTRATION NO. F-2408
TBPELS No. F-882

CITY OF AUSTIN
WILD HORSE RANCH WWTP EXPANSION
ELECTRICAL
ELECTRICAL TYPICAL DETAILS - 15

VERIFY SCALES
BAR IS ONE INCH ON ORIGINAL DRAWING
0 1"
IF NOT ONE INCH ON THIS SHEET, ADJUST SCALES ACCORDINGLY

JOB NO. 10976A.00
DRAWING NO. 00TE15
SHEET NO. 89 OF 464

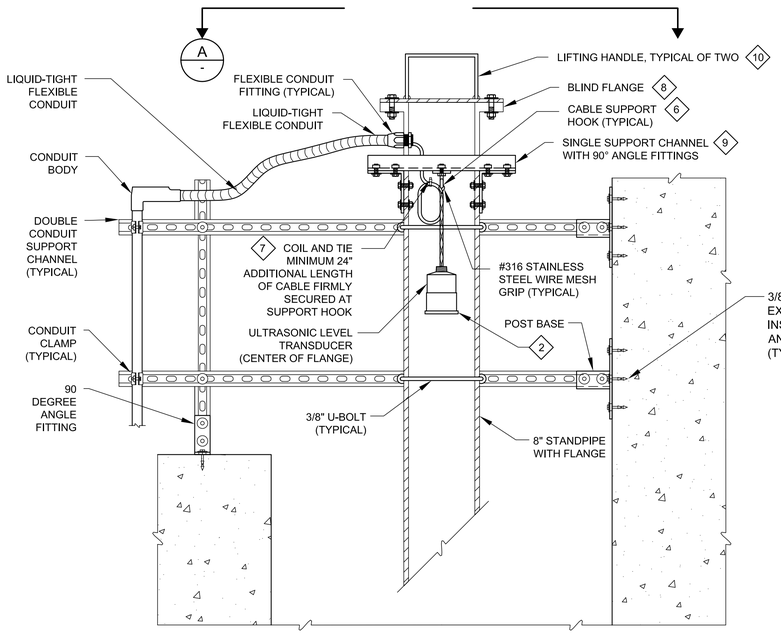

4 N901 TYP — ULTRASONIC LEVEL TRANSDUCER ASSEMBLY INSTALLATION DETAIL

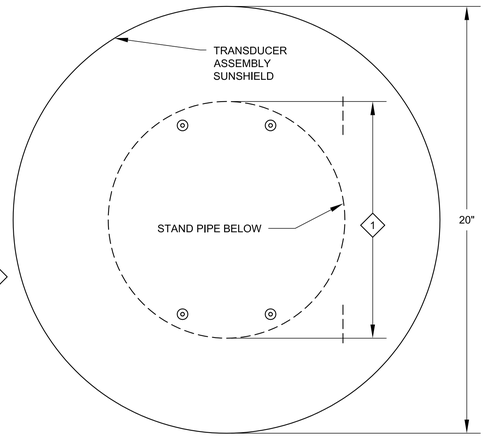

3 A - — TRANSDUCER ASSEMBLY SUN SHIELD TOP VIEW
SCALE: NTS

DETAIL NOTES

1. FURNISH AND INSTALL BLIND FLANGE AND HARDWARE TO PROVIDE INSTRUMENT MOUNTING SURFACE. BLIND FLANGE SIZE/MATERIAL/FINISH/PSI CLASSIFICATION/BOLT PATTERN TO MATCH THAT OF STAND PIPE/FLANGE.
2. INSTALL ULTRASONIC LEVEL ELEMENT AT A MINIMUM ELEVATION OF 1'-0" ABOVE THE HIGHEST POTENTIAL LIQUID LEVEL. REFER TO MECHANICAL FOR INFORMATION REGARDING POTENTIAL LIQUID LEVEL.
3. PROPOSED ALUMINUM SUNSHIELD SHALL HAVE MINIMUM ONE INCH FOAM INSULATION BENEATH TOP PLATE. REFER TO SPECIFICATIONS FOR ADDITIONAL INFORMATION.
4. COORDINATE FINAL LOCATION OF LEVEL ELEMENT WITH MECHANICAL/STRUCUTRAL.
5. THE STRUCTURE TYPE TO WHICH EQUIPMENT AND/OR SUPPORT SYSTEMS SHALL BE MOUNTED MAY VARY. THE EQUIPMENT ANCHOR TYPE SHALL CORRESPOND TO THE TYPE OF STRUCTURE TO WHICH THE EQUIPMENT AND/OR SUPPORT SYSTEMS ARE ATTACHED. THE DRAWING REFLECTS A SPECIFIC STRUCTURE TYPE WITH CORRESPONDING ANCHOR TYPE AND IS TYPICAL FOR THE STRUCTURE TYPE SHOWN. TO ATTACH EQUIPMENT/SUPPORT SYSTEMS TO PRE-CAST/CAST-IN-PLACE CONCRETE WALL/FLOOR SLAB STRUCTURE TYPES, FURNISH AND INSTALL BOLT WITH EXPANSION INSERT ANCHOR. TO ATTACH EQUIPMENT/SUPPORT SYSTEMS TO A CONCRETE MASONRY UNIT (CMU)/BRICK WALL STRUCTURE TYPE, FURNISH AND INSTALL BOLT WITH EXPANSION ANCHOR. TO ATTACH EQUIPMENT/SUPPORT SYSTEMS TO STEEL STRUCTURE TYPE, FURNISH AND INSTALL BOLTING ASSEMBLY. COORDINATE ATTACHMENT REQUIREMENTS WITH STRUCTURAL AND SPECIFICATIONS.
6. THE TYPE 316 STAINLESS STEEL SUPPORT HOOK BOLT SIZE SHALL BE MINIMALLY SIZED 1/4 INCH, WITH A MINIMUM HOOK RADIUS OF 3/4 INCH.
7. COORDINATE CABLE LENGTH WITH THE CONTRACT DOCUMENTS AND PROVIDE THE REQUIRED LENGTH FOR THE APPLICATION. CONTRACTOR TO INSTALL AND MAKE ALL FINAL CONNECTIONS PER THE MANUFACTURER'S WIRING DIAGRAMS AND RECOMMENDATIONS.
8. FURNISH AND INSTALL STAND PIPE/FLANGE AND BLIND FLANGE WITH ALL NECESSARY HARDWARE TO PROVIDE INSTRUMENT MOUNTING SURFACE. BLIND FLANGE SIZE AND BOLT PATTERN TO MATCH THAT OF STAND PIPE/FLANGE.
9. CUT TWO (2) 1-3/4" x 1-3/4" HOLES IN THE OPPOSING EXTERIOR SIDE WALLS OF STAND PIPE TO ALLOW A SINGLE SUPPORT CHANNEL TO BE INSERTED THROUGH STAND PIPE. SECURE THE SUPPORT CHANNEL TO THE STAND PIPE WITH ANGLE BRACKETS. SUPPORT HOOK SHALL BE SECURELY FASTENED TO THE SINGLE SUPPORT CHANNEL.
10. EACH FLANGE SHALL HAVE TWO LIFTING HANDLES ATTACHED TO THE FLANGE. ONLY ONE HANDLE SHOWN HERE FOR CLARITY. EACH HANDLE SHALL BE CONSTRUCTED OF SAME MATERIAL AS THE BLIND FLANGE, 0.25" THICK BY 0.75" WIDE AND OF LENGTH AS REQUIRED TO FORM INTO HANDLE SHAPE AS SHOWN. PROVIDE A MINIMUM OF 6" CLEAR SPACE BETWEEN TOP OF HANDLE AND TOP OF BLIND FLANGE AND TO ALLOW USER HANDS TO ACCESS/GRAB HANDLES WITHOUT OBSTRUCTION. EACH END OF EACH HANDLE SHALL BE ATTACHED ONTO THE BLIND FLANGE WITH CONTINUOUS WELDS. WHERE BLIND FLANGE IS OF STAINLESS STEEL CONSTRUCTION, THE BLIND FLANGE AND EACH HANDLE SHALL BE OF TYPE "316L" LOW CARBON STAINLESS STEEL SUITABLE FOR WELDING. WHERE BLIND FLANGE IS OF ALUMINUM CONSTRUCTION, THE BLIND FLANGE AND EACH HANDLE SHALL BE OF TYPE "6061-T6" ALUMINUM SUITABLE FOR WELDING.

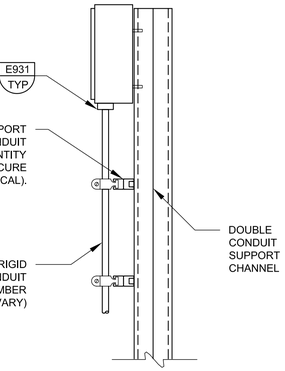

N902 TYP — CONTROL STATION/ INSTRUMENT SUPPORT DETAIL

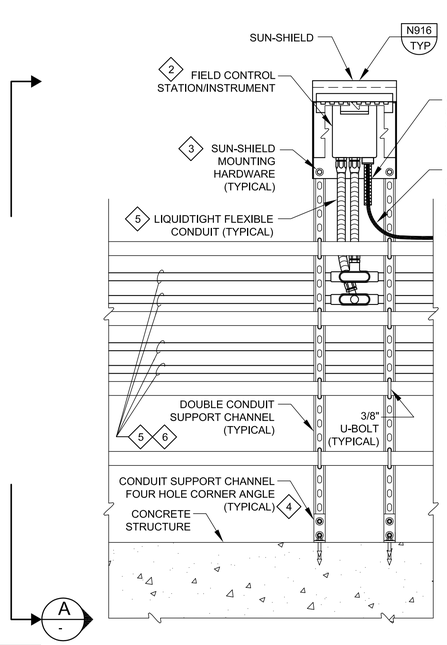

N903 TYP — OUTDOOR INSTRUMENT AT HANDRAIL SUPPORT DETAIL

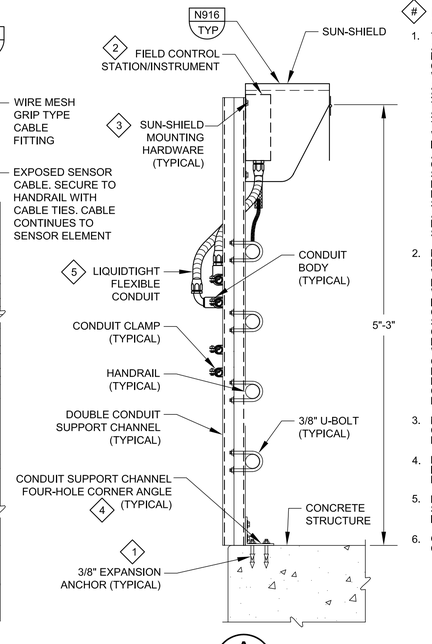

A - — SIDE VIEW
SCALE: NTS

DETAIL NOTES

1. THE STRUCTURE TYPE TO WHICH EQUIPMENT AND/OR SUPPORT SYSTEMS SHALL BE MOUNTED MAY VARY. THE EQUIPMENT ANCHOR TYPE SHALL CORRESPOND TO THE TYPE OF STRUCTURE TO WHICH THE EQUIPMENT AND/OR SUPPORT SYSTEMS ARE ATTACHED. THE DRAWING REFLECTS A SPECIFIC STRUCTURE TYPE WITH CORRESPONDING ANCHOR TYPE AND IS TYPICAL FOR THE STRUCTURE TYPE SHOWN. TO ATTACH EQUIPMENT/SUPPORT SYSTEMS TO PRE-CAST/CAST-IN-PLACE CONCRETE WALL/FLOOR SLAB STRUCTURE TYPES, FURNISH AND INSTALL BOLT WITH EXPANSION INSERT ANCHOR. TO ATTACH EQUIPMENT/SUPPORT SYSTEMS TO A CONCRETE MASONRY UNIT (CMU)/BRICK WALL STRUCTURE TYPE, FURNISH AND INSTALL BOLT WITH EXPANSION ANCHOR. TO ATTACH EQUIPMENT/SUPPORT SYSTEMS TO STEEL STRUCTURE TYPE, FURNISH AND INSTALL BOLTING ASSEMBLY. COORDINATE ATTACHMENT REQUIREMENTS WITH STRUCTURAL AND SPECIFICATIONS.
2. MOUNT FIELD CONTROL STATION/INSTRUMENT TO FABRICATED FIELD CONTROL STATION SUN-SHIELD WITH HARDWARE SIZED PER MANUFACTURER'S RECOMMENDATION. USE FLAT WASHERS AND LOCK WASHERS AT EACH MOUNTING LOCATION. INSTRUMENT SIZE SHOWN IS FOR REPRESENTATION ONLY. ACTUAL FIELD CONTROL STATION/INSTRUMENT DIMENSIONS VARY. COORDINATE EXACT FINAL ELEVATION OF EACH RESPECTIVE FIELD CONTROL STATION/INSTRUMENT WITHIN THE CONFINES OF THE SUN-SHIELD IN ORDER TO PROVIDE MAXIMUM SUN-SHIELDING OF DIGITAL DISPLAY, WHILE MAINTAINING A REASONABLE LINE-OF-SIGHT TO DISPLAY. COORDINATE THIS FINAL ELEVATION WITH OWNERS REPRESENTATIVE PRIOR TO INSTALLATION.
3. MOUNT PROPOSED SUN-SHIELD TO PROPOSED CONDUIT SUPPORT CHANNEL WITH MINIMUM 1/4" HARDWARE.
4. PROPOSED FOUR-HOLE CORNER ANGLES SHALL BE INSTALLED AT FOOT OF MOUNTING RACK TO FASTEN/SECURE RACK TO CONCRETE STRUCTURE.
5. REFER TO FLOOR PLAN AND CONDUIT/WIRE SCHEDULE FOR SPECIFIC CONDUIT/WIRE INFORMATION.
6. QUANTITY AND ARRANGEMENT OF CONDUITS MAY CHANGE PER SPECIFIC INSTALLATION.

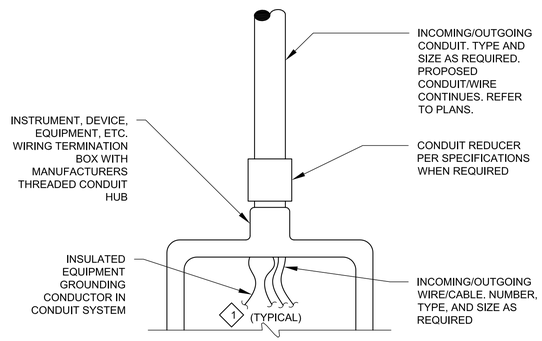

DETAIL NOTES

1 BOND CONDUIT SYSTEM INSULATED GROUNDING CONDUCTOR TO WIRING TERMINATION BOX BY MEANS OF GROUND BUS BAR/TERMINATION BLOCK/LUG FURNISHED IN WIRING TERMINATION BOX. REFER TO DETAIL E931/[00TE09] FOR ADDITIONAL INFORMATION.

N904 TYP — CONDUIT REDUCER INSTALLATION DETAIL

THIS CONFORMED DOCUMENT IS RELEASED FOR THE CONVENIENCE OF THE CONTRACTOR UNDER THE AUTHORITY OF:

K. A. HARUTUNIAN, P.E.
TX LIC NO. 59181

11-01-22
DATE

SEE DISCLAIMER FOR LIMITATIONS OF USE.

CONTRACT DOCUMENTS DATED FEBRUARY 28, 2022, AS PART OF THE BIDDING DOCUMENTS (DRAWINGS AND SPECIFICATIONS) AND SUBSEQUENTLY ISSUED ADDENDA HAVE BEEN MERGED INTO ONE CONFORMING SET OF DOCUMENTS FOR THE CONVENIENCE OF THE CONTRACTOR. IF INCONSISTENCIES OR AMBIGUITIES BETWEEN "CONFORMED" DOCUMENTS AND CONTRACT DOCUMENTS ARE FOUND, THE CONTRACT DOCUMENTS SHALL GOVERN.

This document, and the designs incorporated herein, is an instrument of professional service that has been developed, designed and prepared by Harutunian Engineering, Inc., and is not to be used, in whole or in part, for any other project without giving written notice to Harutunian Engineering, Inc.

REV	DATE	BY	DESCRIPTION
			CONFORMED DOCUMENTS

DESIGNED HEI
DRAWN HEI
CHECKED HEI
DATE NOVEMBER 2022

** ORIGINAL SEALED BY K.A. HARUTUNIAN 02-28-22 TX PE 59181 **

HARUTUNIAN ENGINEERING INCORPORATED
ENGINEERING AND ENVIRONMENTAL CONSULTANTS
8100 CROSS PARK DRIVE
AUSTIN, TEXAS 78754
TBPE REGISTRATION NO. F-2408

carollo
TBPELS No. F-882

CITY OF AUSTIN

CITY OF AUSTIN
WILD HORSE RANCH WWTP EXPANSION
INSTRUMENTATION
INSTRUMENTATION TYPICAL DETAILS - 1

VERIFY SCALES
BAR IS ONE INCH ON ORIGINAL DRAWING
0 1"
IF NOT ONE INCH ON THIS SHEET, ADJUST SCALES ACCORDINGLY

JOB NO. 10976A.00
DRAWING NO. 00TN01
SHEET NO. 90 OF 464

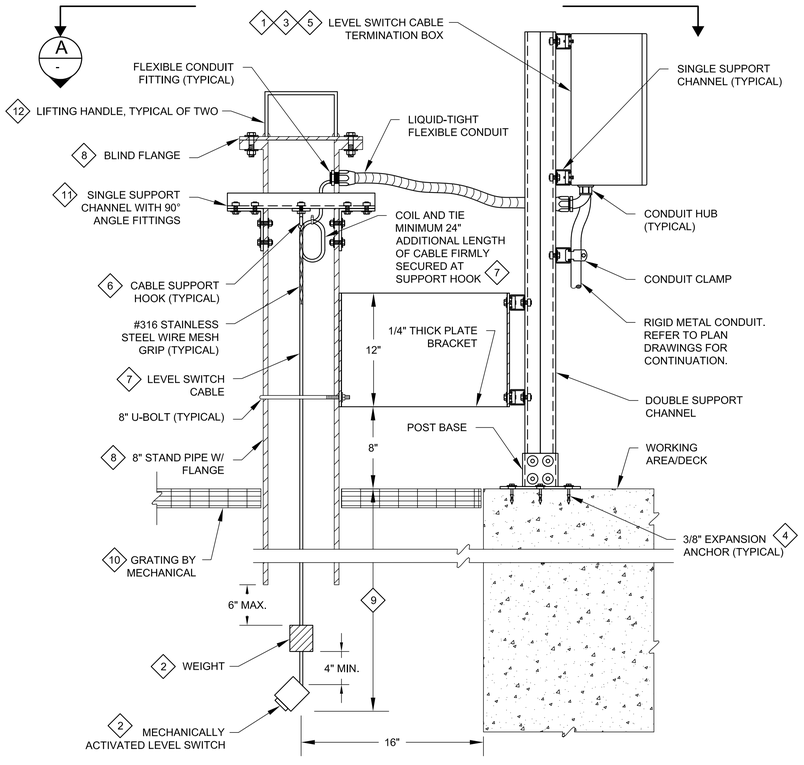

N905 TYP — MECHANICALLY ACTIVATED LEVEL SWITCH INSTALLATION DETAIL

DETAIL NOTES

1. ALL PROPOSED CONDUIT/WIRE ASSOCIATED WITH LEVEL SWITCHES SHALL TERMINATE AT MULTI-CABLE CONNECTOR BLOCKS MOUNTED TO THE BACK PANEL INSIDE THE LEVEL SWITCH TERMINATION BOX.
2. COORDINATE LEVEL ELEVATION WITH OWNER AND MECHANICAL. COORDINATE LEVEL CABLE LENGTH, WEIGHT, STAINLESS STEEL WIRE MESH LENGTH, AND MOUNTING HARDWARE WITH LEVEL MANUFACTURER. FURNISH AND INSTALL LEVEL WITH MOVABLE WEIGHT FOR LEVEL ADJUSTMENT. FURNISH AND INSTALL ALL WEIGHT ATTACHMENT STAINLESS STEEL HARDWARE AND MAKE ALL FINAL CONNECTIONS. FURNISH AND INSTALL ALL CABLE/LEVEL STAINLESS STEEL ATTACHMENT HARDWARE AND MAKE ALL FINAL CONNECTIONS. ALL NECESSARY MOUNTING HARDWARE IS NOT SHOWN HERE FOR CLARITY.
3. ALLOW 48" (MINIMUM) OF EXTRA CABLE AT THIS LOCATION. COORDINATE LENGTH OF LEVEL SWITCHES/LEVEL SWITCH CABLE WITH EQUIPMENT MANUFACTURER AS TO ENSURE ADEQUATE LENGTH OF PROPOSED CABLE/CABLES.
4. THE PROPOSED STRUCTURE TYPE CONNECTING TO THE PROPOSED EQUIPMENT MAY VARY. THE EQUIPMENT ANCHOR TYPE MAY ALSO VARY BUT SHALL CORRESPOND TO THE TYPE OF STRUCTURE TO WHICH THE EQUIPMENT IS ATTACHED. THE DRAWING REFLECTS A SPECIFIC STRUCTURE TYPE WITH CORRESPONDING ANCHOR TYPE AND IS TYPICAL FOR THE STRUCTURE TYPE SHOWN. TO ATTACH EQUIPMENT TO PRE-CAST/CAST-IN-PLACE CONCRETE WALL/FLOOR SLAB STRUCTURE TYPES, FURNISH AND INSTALL BOLT WITH EXPANSION ANCHOR. TO ATTACH EQUIPMENT TO A CONCRETE MASONRY UNIT (CMU) WALL STRUCTURE TYPE, FURNISH AND INSTALL BOLT WITH EXPANSION ANCHOR. CAREFULLY COORDINATE STRUCTURE TYPES WITH STRUCTURAL.
5. CONTRACTOR SHALL FURNISH AND INSTALL ENCLOSURE MINIMALLY SIZED 16" X 16" X 8". ENCLOSURE SHALL BE FURNISHED WITH MANUFACTURERS FULL SIZE BACK PANEL. ENCLOSURE MOUNTING CONFIGURATION MAY VARY. REFER TO PLANS FOR SPECIFIC MOUNTING ARRANGEMENT.
6. THE TYPE 316 STAINLESS STEEL SUPPORT HOOK BOLT SIZE SHALL BE MINIMALLY SIZED 1/4 INCH, WITH A MINIMUM HOOK RADIUS OF 3/4 INCH.
7. COORDINATE CABLE LENGTH WITH THE CONTRACT DOCUMENTS AND PROVIDE THE REQUIRED LENGTH FOR THE APPLICATION. CONTRACTOR TO INSTALL AND MAKE ALL FINAL CONNECTIONS PER THE MANUFACTURER'S WIRING DIAGRAMS AND RECOMMENDATIONS.
8. FURNISH AND INSTALL STAND PIPE/FLANGE AND BLIND FLANGE WITH ALL NECESSARY HARDWARE TO PROVIDE INSTRUMENT MOUNTING SURFACE. BLIND FLANGE SIZE AND BOLT PATTERN TO MATCH THAT OF STAND PIPE/FLANGE.
9. ELEVATION OF THE LEVEL SWITCH VARIES FOR LOW-LOW LEVEL AND HIGH-HIGH LEVEL MEASUREMENT AND FOR EACH WET WELL/VAULT/TANK/ETC. IN WHICH THE LEVEL SWITCH IS INSTALLED, REFER TO THE INSTRUMENT LIST IN SPECIFICATION SECTION 17380 APPENDIX A FOR MINIMUM AND MAXIMUM LEVELS OF EACH INSTRUMENT. REFER ALSO TO MECHANICAL/ELECTRICAL/INSTRUMENTATION DRAWINGS FOR ADDITIONAL INFORMATION.
10. CUT NOTCH IN GRATING IMMEDIATELY ADJACENT TO JOINT TO ALLOW FOR REMOVAL OF GRATING. LOCATE LEVEL ELEMENT NEAR GRATING JOINT TO FACILITATE NOTCH CUT. ALSO REFER TO STRUCTURAL/MECHANICAL DRAWINGS FOR ADDITIONAL INFORMATION.
11. CUT TWO (2) 1-3/4" x 1-3/4" HOLES IN THE OPPOSING EXTERIOR SIDE WALLS OF STAND PIPE TO ALLOW A SINGLE SUPPORT CHANNEL TO BE INSERTED THROUGH STAND PIPE. SECURE THE SUPPORT CHANNEL TO THE STAND PIPE WITH ANGLE BRACKETS. SUPPORT HOOK SHALL BE SECURELY FASTENED TO THE SINGLE SUPPORT CHANNEL
12. EACH FLANGE SHALL HAVE TWO LIFTING HANDLES ATTACHED TO THE FLANGE. ONLY ONE HANDLE SHOWN HERE FOR CLARITY. EACH HANDLE SHALL BE CONSTRUCTED OF SAME MATERIAL AS THE BLIND FLANGE, 0.25" THICK BY 0.75" WIDE AND OF LENGTH AS REQUIRED TO FORM INTO HANDLE SHAPE AS SHOWN. PROVIDE A MINIMUM OF 6" CLEAR SPACE BETWEEN TOP OF HANDLE AND TOP OF BLIND FLANGE AND TO ALLOW USER HANDS TO ACCESS/GRAB HANDLES WITHOUT OBSTRUCTION. EACH END OF EACH HANDLE SHALL BE ATTACHED ONTO THE BLIND FLANGE WITH CONTINUOUS WELDS. WHERE BLIND FLANGE IS OF STAINLESS STEEL CONSTRUCTION, THE BLIND FLANGE AND EACH HANDLE SHALL BE OF TYPE "316L" LOW CARBON STAINLESS STEEL SUITABLE FOR WELDING. WHERE BLIND FLANGE IS OF ALUMINUM CONSTRUCTION, THE BLIND FLANGE AND EACH HANDLE SHALL BE OF TYPE "6061-T6" ALUMINUM SUITABLE FOR WELDING.

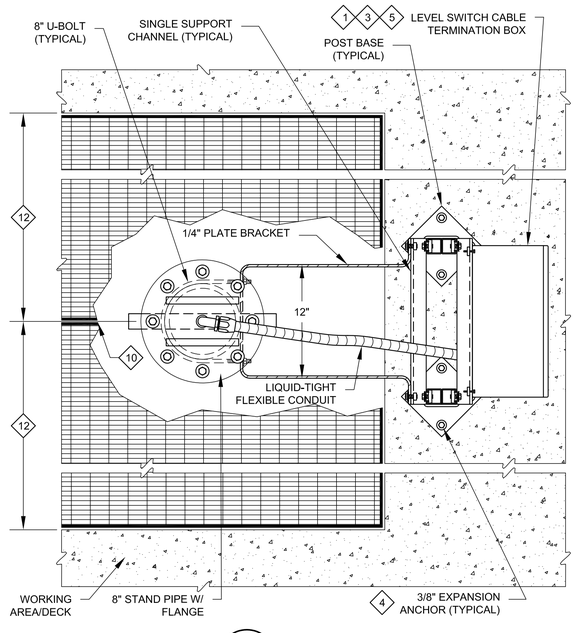

A - TOP VIEW
SCALE: NTS

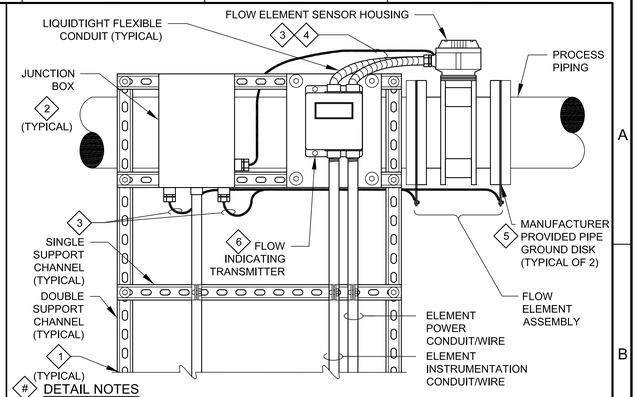

DETAIL NOTES

1. SUPPORT CHANNEL CONTINUES TO FINISHED PLATFORM AND ATTACHES WITH POST BASE FITTINGS. LAYOUT AND LOCATIONS MAY VARY AND MAY REQUIRE ADDITIONAL SUPPORT METHODS. CAREFULLY COORDINATE THE NEED FOR SUCH AND FURNISH AND INSTALL AT NO ADDITIONAL COST TO THE OWNER.
2. FURNISH AND INSTALL JUNCTION BOX 12" X 8" X 6" (MINIMUM) WITH MANUFACTURER PROVIDED BACK PANEL. FURNISH AND INSTALL WIRE/CABLE CONNECTOR PER SECTION 16200. WITH SUFFICIENT NUMBER OF PORTS TO SPLICE GROUNDING CONDUCTORS ROUTED TO/FROM THE FLOW ELEMENT SENSOR AND THE SENSOR PIPE GROUND DISKS WITH THE GROUNDING CONDUCTOR ROUTED TO/FROM THE APPLICABLE MAIN CONTROL PANEL.
3. FURNISH AND INSTALL NO. 10 AWG INSULATED GROUNDING CONDUCTOR. GROUNDING CONDUCTOR SHALL SPLICE IN JUNCTION BOX AND ROUTE EXPOSED TO FLOW ELEMENT SENSOR HOUSING AND SENSOR PIPE GROUND DISKS. SECURE/SUPPORT EXPOSED GROUNDING CONDUCTOR TO SUPPORT CHANNEL/CONDUIT/EQUIPMENT/ETC. WITH WIRE TIES. COORDINATE WITH INSTRUMENT MANUFACTURER TO IMPLEMENT POTENTIAL MATCHING. REFER TO INSTRUMENT WIRING SCHEMATICS FOR ADDITIONAL INFORMATION.
4. CONNECT NO. 10 AWG GROUNDING CONDUCTOR DIRECTLY TO FLOW ELEMENT SENSOR HOUSING EXTERNAL GROUNDING TERMINAL.
5. CONNECT NO. 10 AWG GROUNDING CONDUCTOR DIRECTLY TO PIPE GROUND DISK FURNISHED BY FLOW ELEMENT SENSOR MANUFACTURER.
6. MOUNT TRANSMITTER MAXIMUM 54 INCHES ABOVE FINISHED FLOOR, UNLESS OTHERWISE STATED ON DRAWINGS.

N906 TYP — ELECTROMAGNETIC INLINE FLOW ELEMENT ASSEMBLY

THIS CONFORMED DOCUMENT IS RELEASED FOR THE CONVENIENCE OF THE CONTRACTOR UNDER THE AUTHORITY OF:

K. A. HARUTUNIAN, P.E. — 11-01-22
TX LIC NO. 59181 — DATE

SEE DISCLAIMER FOR LIMITATIONS OF USE.

CONTRACT DOCUMENTS DATED FEBRUARY 28, 2022, AS PART OF THE BIDDING DOCUMENTS (DRAWINGS AND SPECIFICATIONS) AND SUBSEQUENTLY ISSUED ADDENDA HAVE BEEN MERGED INTO ONE CONFORMING SET OF DOCUMENTS FOR THE CONVENIENCE OF THE CONTRACTOR. IF INCONSISTENCIES OR AMBIGUITIES BETWEEN "CONFORMED" DOCUMENTS AND CONTRACT DOCUMENTS ARE FOUND, THE CONTRACT DOCUMENTS SHALL GOVERN.

This document, and the designs incorporated herein, is an instrument of professional service that has been developed, designed and prepared by Harutunian Engineering, Inc., and is not to be used, in whole or in part, for any other project without giving written notice to Harutunian Engineering, Inc.

CONFORMED DOCUMENTS

REV	DATE	BY	DESCRIPTION

DESIGNED HEI | DRAWN HEI | CHECKED HEI | DATE NOVEMBER 2022

** ORIGINAL SEALED BY K.A. HARUTUNIAN 02-28-22 TX PE 59181 **

HARUTUNIAN ENGINEERING INCORPORATED
ENGINEERING AND ENVIRONMENTAL CONSULTANTS
8100 CROSS PARK DRIVE, AUSTIN, TEXAS 78754
TBPE REGISTRATION NO. F-2408

carollo
TBPELS No. F-882

CITY OF AUSTIN — FOUNDED 1839
CITY OF AUSTIN

CITY OF AUSTIN
WILD HORSE RANCH WWTP EXPANSION
INSTRUMENTATION
INSTRUMENTATION TYPICAL DETAILS - 2

VERIFY SCALES
BAR IS ONE INCH ON ORIGINAL DRAWING
0 1"
IF NOT ONE INCH ON THIS SHEET, ADJUST SCALES ACCORDINGLY

JOB NO. 10976A.00
DRAWING NO. 00TN02
SHEET NO. 91 OF 464

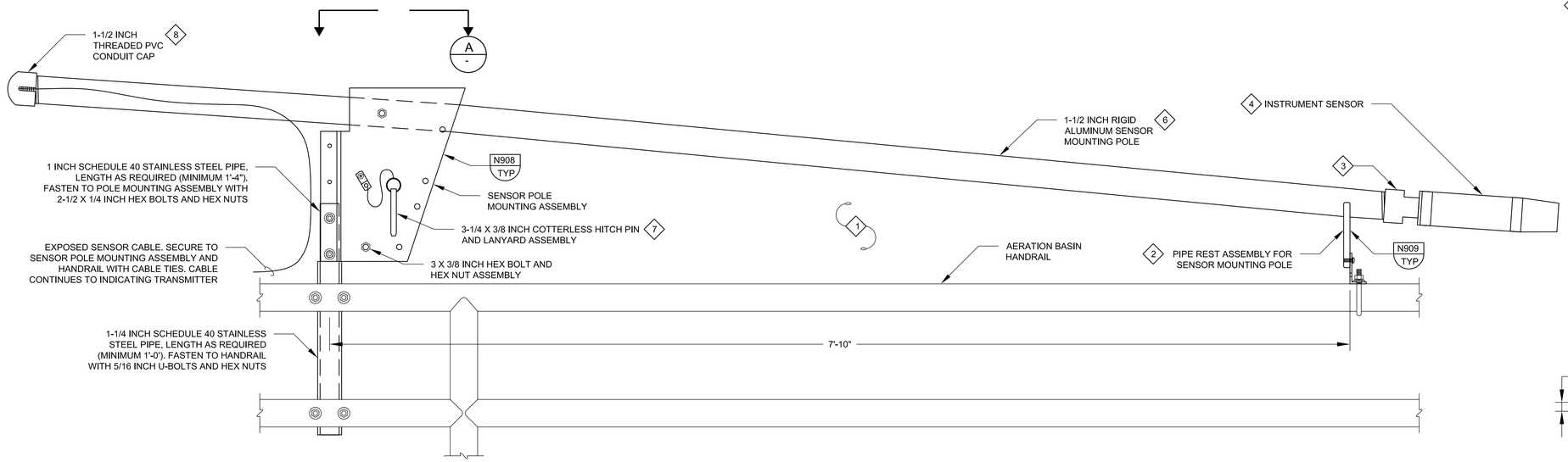

N907 TYP **AERATION BASIN SENSOR MOUNTING DETAIL**

DETAIL NOTES

1. ALL SENSOR POLE MOUNTING ASSEMBLY HARDWARE SHALL BE 316 STAINLESS STEEL. ALL HEX NUTS SHALL BE THE NYLON INSERT LOCKING TYPE.
2. FURNISH AND INSTALL PIPE REST FOR HANDRAIL MOUNTING HARDWARE AS MANUFACTURED BY HACH, PRODUCT NO. 276G1206, OR APPROVED EQUAL. SUBMIT PRODUCT DATA FOR PIPE REST IN COMPLIANCE WITH SPECIFICATION SECTIONS 01300 AND 17380. INSTALL PER MANUFACTURER'S RECOMMENDATIONS AND DETAIL THREE ON THIS DRAWING.
3. FURNISH AND INSTALL MOUNTING CONVERSION ADAPTER FOR DISSOLVED OXYGEN SENSOR AND FOR OXIDATION REDUCTION POTENTIAL SENSOR TO ADAPT FROM SENSOR'S 1" NPT THREADS TO MOUNTING POLE'S 1-1/2" NPT THREADS. MOUNTING CONVERSION ADAPTER SHALL BE AS MANUFACTURED BY HACH, PRODUCT NO. 9253400, OR APPROVED EQUAL. SUBMIT PRODUCT DATA FOR MOUNTING CONVERSION ADAPTER IN COMPLIANCE WITH SPECIFICATION SECTIONS 01300 AND 17380.
4. ALTHOUGH DISSOLVED OXYGEN SENSOR IS SHOWN, DETAIL IS APPLICABLE FOR EACH THE DISSOLVED OXYGEN SENSOR MOUNTING, OXIDATION REDUCTION POTENTIAL SENSOR MOUNTING, AND TOTAL SUSPENDED SOLIDS SENSOR MOUNTING.
5. 1-1/2 INCH RIGID ALUMINUM SENSOR MOUNTING POLE NOT SHOWN IN SECTION DRAWING FOR PURPOSE OF CLARITY.
6. FURNISH AND INSTALL 10'-0" LONG PIECE OF 1-1/2 INCH RIGID ALUMINUM CONDUIT FOR USE AS SENSOR MOUNTING POLE. DRILL A 3/8 INCH DIAMETER HOLE THROUGH THE CENTERLINE OF THE CONDUIT AT 2'-1" FROM ONE END OF THE CONDUIT FOR MOUNTING TO THE SENSOR POLE MOUNTING ASSEMBLY. FASTEN/SECURE SENSOR POLE TO THE MOUNTING ASSEMBLY USING A 3 x 3/8 INCH HEX BOLT AND HEX NUT ASSEMBLY.
7. FURNISH COTTERLESS HITCH PIN COMPLETE WITH WITH 6 INCH NYLON COVERED FLEXIBLE STAINLESS STEEL WIRE ROPE LANYARD ASSEMBLY AND BRACKET FOR ATTACHING LANYARD TO SENSOR POLE MOUNTING ASSEMBLY. FASTEN BRACKET TO SENSOR POLE MOUNTING ASSEMBLY WITH 3/4 INCH LONG 10-24 BOLT AND HEX NUT.
8. FURNISH AND INSTALL 1-1/2 INCH THREADED PVC CONDUIT CAP. NOTCH SIDE OF CONDUIT CAP WITH A NOTCH THAT IS OF MINIMUM WIDTH AND LENGTH REQUIRED TO ALLOW THE SENSOR CABLE TO PASS FREELY THROUGH THE NOTCHED OPENING AFTER THE CONDUIT CAP IS INSTALLED ONTO THE ALUMINUM CONDUIT. DEBUR THE NOTCHED PVC TO AVOID POSSIBLE DAMAGE TO THE SENSOR CABLE.

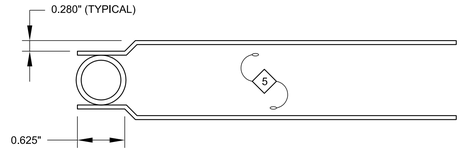

A - **POLE MOUNTING ASSEMBLY SECTION**
SCALE: NTS

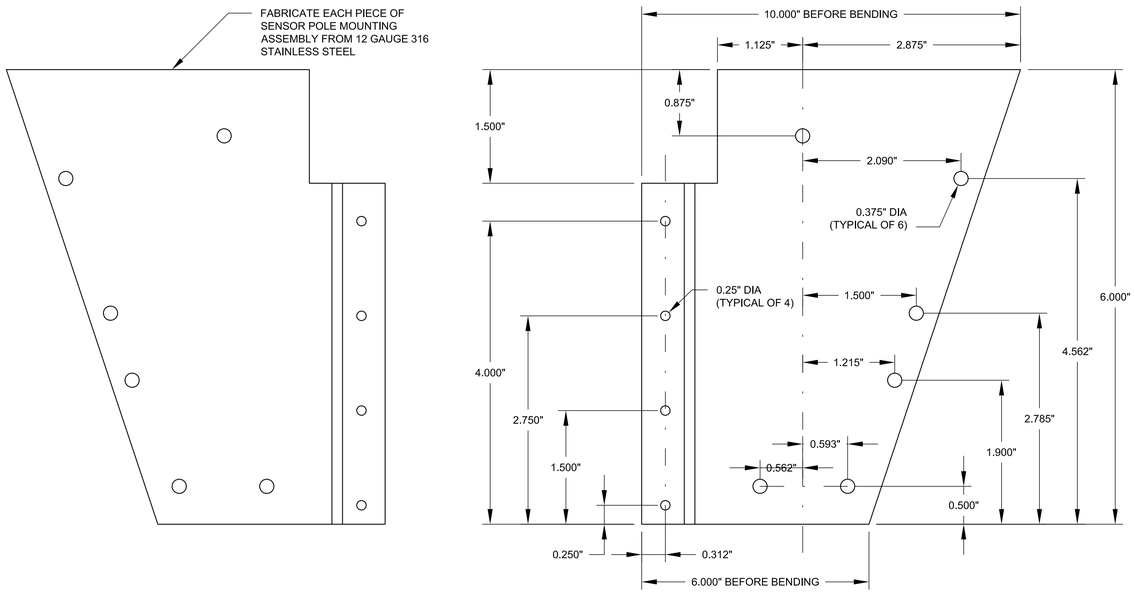

LEFT PIECE

RIGHT PIECE

N908 TYP **SENSOR POLE MOUNTING ASSEMBLY DETAIL**

DETAIL NOTES

1. FURNISH AND INSTALL PIPE REST FOR HANDRAIL MOUNTING HARDWARE AS MANUFACTURED BY HACH, PRODUCT NO. 276G1206, OR APPROVED EQUAL. SUBMIT PRODUCT DATA FOR PIPE REST IN COMPLIANCE WITH SPECIFICATION SECTIONS 01300 AND 17380. INSTALL PER MANUFACTURER'S RECOMMENDATIONS AND DETAIL N908/[00TN03] ON THIS DRAWING.

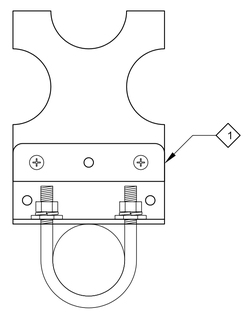

N909 TYP **POLE REST MOUNTING DETAIL**

THIS CONFORMED DOCUMENT IS RELEASED FOR THE CONVENIENCE OF THE CONTRACTOR UNDER THE AUTHORITY OF:

K. A. HARUTUNIAN, P.E.
TX LIC NO. 59181

11-01-22
DATE

SEE DISCLAIMER FOR LIMITATIONS OF USE.

CONTRACT DOCUMENTS DATED FEBRUARY 28, 2022, AS PART OF THE BIDDING DOCUMENTS (DRAWINGS AND SPECIFICATIONS) AND SUBSEQUENTLY ISSUED ADDENDA HAVE BEEN MERGED INTO ONE CONFORMING SET OF DOCUMENTS FOR THE CONVENIENCE OF THE CONTRACTOR. IF INCONSISTENCIES OR AMBIGUITIES BETWEEN "CONFORMED" DOCUMENTS AND CONTRACT DOCUMENTS ARE FOUND, THE CONTRACT DOCUMENTS SHALL GOVERN.

This document, and the designs incorporated herein, is an instrument of professional service that has been developed, designed and prepared by Harutunian Engineering, Inc., and is not to be used, in whole or in part, for any other project without giving written notice to Harutunian Engineering, Inc.

REV	DATE	BY	DESCRIPTION
			CONFORMED DOCUMENTS

DESIGNED HEI
DRAWN HEI
CHECKED HEI
DATE NOVEMBER 2022

** ORIGINAL SEALED BY K.A. HARUTUNIAN 02-28-22 TX PE 59181 **

HARUTUNIAN ENGINEERING INCORPORATED
ENGINEERING AND ENVIRONMENTAL CONSULTANTS
8100 CROSS PARK DRIVE
AUSTIN, TEXAS 78754
TBPE REGISTRATION NO. F-2408

carollo
TBPELS No. F-882

CITY OF AUSTIN
FOUNDED 1839
CITY OF AUSTIN

CITY OF AUSTIN
WILD HORSE RANCH WWTP EXPANSION
INSTRUMENTATION
INSTRUMENTATION TYPICAL DETAILS - 3

VERIFY SCALES
BAR IS ONE INCH ON ORIGINAL DRAWING
0 1"
IF NOT ONE INCH ON THIS SHEET, ADJUST SCALES ACCORDINGLY

JOB NO. 10976A.00
DRAWING NO. 00TN03
SHEET NO. 92 OF 464

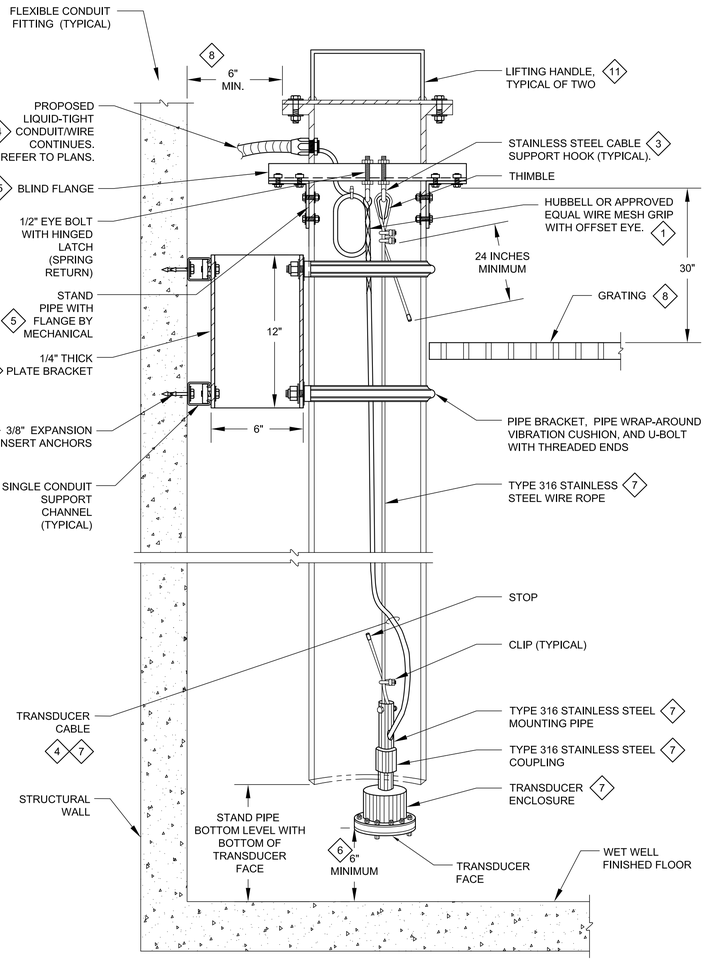

DETAIL NOTES

1. ALLOW 36" (MINIMUM) OF EXTRA CABLE AT THIS LOCATION. COORDINATE LENGTH OF TRANSDUCER CABLE WITH EQUIPMENT MANUFACTURER AS TO ENSURE ADEQUATE LENGTH OF PROPOSED CABLE/CABLES.
2. THE PROPOSED STRUCTURE TYPE CONNECTING TO THE PROPOSED EQUIPMENT MAY VARY. THE EQUIPMENT ANCHOR TYPE MAY ALSO VARY BUT SHALL CORRESPOND TO THE TYPE OF STRUCTURE TO WHICH THE EQUIPMENT IS ATTACHED. THE DRAWING REFLECTS A SPECIFIC STRUCTURE TYPE WITH CORRESPONDING ANCHOR TYPE AND IS TYPICAL FOR THE STRUCTURE TYPE SHOWN. TO ATTACH EQUIPMENT TO PRE-CAST/CAST-IN-PLACE CONCRETE WALL/FLOOR SLAB STRUCTURE TYPES, FURNISH AND INSTALL BOLT WITH EXPANSION INSERT ANCHOR. TO ATTACH EQUIPMENT TO A CONCRETE MASONRY UNIT (CMU) WALL STRUCTURE TYPE, FURNISH AND INSTALL BOLT WITH EXPANSION INSERT ANCHOR. COORDINATE STRUCTURE TYPES WITH STRUCTURAL.
3. THE TYPE 316 STAINLESS STEEL SUPPORT HOOK BOLT SIZE SHALL BE MINIMALLY SIZED 1/4 INCH, WITH A MINIMUM HOOK RADIUS OF 3/4 INCH.
4. CONTRACTOR SHALL COORDINATE CABLE LENGTH WITH THE CONTRACT DOCUMENTS AND PROVIDE THE REQUIRED LENGTH FOR INTERCONNECTION TO TRANSMITTER. CONTRACTOR TO INSTALL AND MAKE ALL FINAL CONNECTIONS PER THE MANUFACTURER'S WIRING DIAGRAMS AND RECOMMENDATIONS.
5. FURNISH AND INSTALL STAND PIPE/FLANGE AND BLIND FLANGE WITH ALL NECESSARY HARDWARE TO PROVIDE INSTRUMENT MOUNTING SURFACE. BLIND FLANGE SIZE AND BOLT PATTERN TO MATCH THAT OF STAND PIPE/FLANGE.
6. PROVIDE A MINIMUM OF SIX INCHES OF CLEAR SPACE ALL AROUND TRANSDUCER ENCLOSURE/FACE. COORDINATE MOUNTING ELEVATION WITH OWNER.
7. FURNISHED BY INSTRUMENT MANUFACTURER. COORDINATE WITH INSTRUMENT MANUFACTURER AND INSTALL PER THE MANUFACTURER'S RECOMMENDATIONS.
8. CUT NOTCH IN GRATING IMMEDIATELY ADJACENT TO JOINT TO ALLOW FOR REMOVAL OF GRATING. LOCATE LEVEL ELEMENT NEAR GRATING JOINT TO FACILITATE NOTCH CUT. ALSO REFER TO STRUCTURAL/MECHANICAL DRAWINGS FOR ADDITIONAL INFORMATION.
9. VENTILATION PIPING SHALL BE CONSTRUCTED OF INSTRUMENT TUBING AND FITTINGS. PROVIDE VENT SCREEN FITTING AT TERMINATION OF STAND PIPE VENT PIPING. BOTTOM OF VENT SCREEN SHALL BE 3" ABOVE TOP OF BLIND FLANGE. ATTACH PIPING TO BLIND FLANGE WITH INSTRUMENT TUBING MALE CONNECTOR FITTING, BOLTS AND WASHERS. REFER TO SPECIFICATIONS FOR STAND PIPE VENTILATION TUBING, VENT SCREEN FITTING AND ELBOWS/FITTINGS MATERIALS/REQUIREMENTS.
10. FOR TOP VIEW OF STAND PIPE SUPPORT BRACKET, REFER TO DETAIL N905/[00TN02].
11. EACH FLANGE SHALL HAVE TWO LIFTING HANDLES ATTACHED TO THE FLANGE. ONLY ONE HANDLE SHOWN HERE FOR CLARITY. EACH HANDLE SHALL BE CONSTRUCTED OF SAME MATERIAL AS THE BLIND FLANGE, 0.25" THICK BY 0.75" WIDE AND OF LENGTH AS REQUIRED TO FORM INTO HANDLE SHAPE AS SHOWN. PROVIDE A MINIMUM OF 6" CLEAR SPACE BETWEEN TOP OF HANDLE AND TOP OF BLIND FLANGE AND TO ALLOW USER HANDS TO ACCESS/GRAB HANDLES WITHOUT OBSTRUCTION. EACH END OF EACH HANDLE SHALL BE ATTACHED ONTO THE BLIND FLANGE WITH CONTINUOUS WELDS. WHERE BLIND FLANGE IS OF STAINLESS STEEL CONSTRUCTION, THE BLIND FLANGE AND EACH HANDLE SHALL BE OF TYPE "316L" LOW CARBON STAINLESS STEEL SUITABLE FOR WELDING. WHERE BLIND FLANGE IS OF ALUMINUM CONSTRUCTION, THE BLIND FLANGE AND EACH HANDLE SHALL BE OF TYPE "6061-T6" ALUMINUM SUITABLE FOR WELDING

N910 TYP — SUBMERSIBLE LEVEL TRANSDUCER INSTALLATION DETAIL

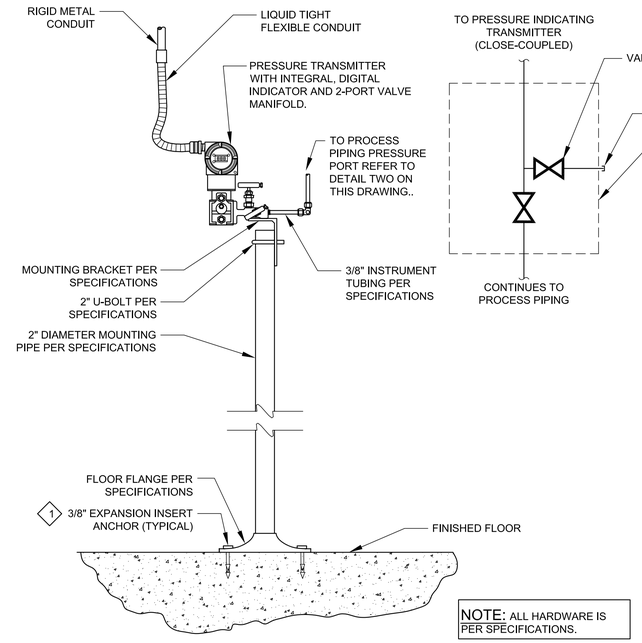

NOTE: ALL HARDWARE IS PER SPECIFICATIONS.

N911 TYP — PRESSURE INDICATING TRANSMITTER INSTALLATION DETAIL

DETAIL NOTES

1. THE PROPOSED STRUCTURE TYPE CONNECTING TO THE PROPOSED EQUIPMENT MAY VARY. THE EQUIPMENT ANCHOR TYPE MAY ALSO VARY BUT SHALL CORRESPOND TO THE TYPE OF STRUCTURE TO WHICH THE EQUIPMENT IS ATTACHED. THE DRAWING REFLECTS A SPECIFIC STRUCTURE TYPE WITH CORRESPONDING ANCHOR TYPE AND IS TYPICAL FOR THE STRUCTURE TYPE SHOWN. TO ATTACH EQUIPMENT TO PRE-CAST/CAST-IN-PLACE CONCRETE WALL/FLOOR SLAB STRUCTURE TYPES, FURNISH AND INSTALL BOLT WITH EXPANSION INSERT ANCHOR. TO ATTACH EQUIPMENT TO A CONCRETE MASONRY UNIT (CMU) WALL STRUCTURE TYPE, FURNISH AND INSTALL BOLT WITH EXPANSION INSERT ANCHOR. COORDINATE STRUCTURE TYPES WITH STRUCTURAL.
2. FURNISH AND INSTALL FLEXIBLE INSTRUMENT TUBING AND SCREENED FITTING.

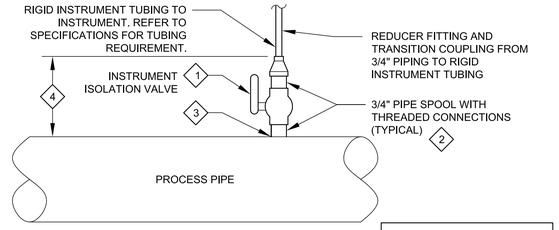

NOTE: DETAIL SHOWN IN ELEVATION VIEW

DETAIL NOTES

1. FULL PORT BALL VALVE SAME SIZE AS ADJACENT PIPE SPOOL PIECE AND WITH THREADED CONNECTIONS, QUARTER TURN HANDLE, AND LOCKABLE WITH LOCK-OUT TO ACCEPT PAD LOCK. REFER TO MECHANICAL SPECIFICATIONS FOR ADDITIONAL VALVE REQUIREMENTS. REFER TO MECHANICAL PIPING AND VALVE SCHEDULES/REQUIREMENTS FOR VALVE MATERIAL, PRESSURE RATING AND GENERAL CONSTRUCTION REQUIREMENTS. VALVE SHALL BE SUITABLE FOR THE PROCESS FLUID PRESSURE, TEMPERATURE AND CORROSION CHARACTERISTICS. LOCATE VALVES SUCH THAT THERE IS 36" MINIMUM CLEARANCE TO ACCESS AND OPERATE VALVE HAND QUADRANT. CALIBRATION AND FLUSH VALVES SHALL BE NORMALLY CLOSED; ALL OTHER VALVES NORMALLY OPEN.
2. SCHEDULE 80 MINIMUM PIPE WALL THICKNESS FOR ALL PIPING SHOWN ATTACHED TO PROCESS PIPE. MATERIAL, PRESSURE RATING AND CONSTRUCTION REQUIREMENTS OF PIPING AND FITTINGS SHOWN ON THIS DETAIL SHALL MATCH AND/OR EXCEED PROCESS PIPE REQUIREMENTS SERVED BY PRESSURE PORT AND SHALL BE SUITABLE FOR THE PROCESS FLUID PRESSURE, TEMPERATURE, AND CORROSION CHARACTERISTICS. REFER TO MECHANICAL PLANS AND SPECIFICATIONS FOR ADDITIONAL REQUIREMENTS.
3. PROVIDE NPT THREADED CONNECTION SAME SIZE AS PRESSURE PORT PIPE SPOOL. FOR PROCESS PIPING, REFER TO MECHANICAL DETAILS AND SPECIFICATIONS FOR PIPE THREADED OUTLET PIPE-O-LET OR T-FITTING AND OTHER REQUIREMENTS FOR CONNECTION TO PROCESS PIPING.
4. INSTALL SYSTEM PIPING/COMPONENTS SUCH THAT THIS DISTANCE IS AS SHORT AS POSSIBLE WITHOUT COMPROMISING OPERATION/ACCESS OF VALVES AND UNIONS.

N912 TYP — STANDARD PRESSURE PORT INSTALLATION DETAIL

THIS CONFORMED DOCUMENT IS RELEASED FOR THE CONVENIENCE OF THE CONTRACTOR UNDER THE AUTHORITY OF:

K. A. Harutunian — 11-01-22

K. A. HARUTUNIAN, P.E. — DATE
TX LIC NO. 59181

SEE DISCLAIMER FOR LIMITATIONS OF USE.

CONTRACT DOCUMENTS DATED FEBRUARY 28, 2022, AS PART OF THE BIDDING DOCUMENTS (DRAWINGS AND SPECIFICATIONS) AND SUBSEQUENTLY ISSUED ADDENDA HAVE BEEN MERGED INTO ONE CONFORMING SET OF DOCUMENTS FOR THE CONVENIENCE OF THE CONTRACTOR. IF INCONSISTENCIES OR AMBIGUITIES BETWEEN "CONFORMED" DOCUMENTS AND CONTRACT DOCUMENTS ARE FOUND, THE CONTRACT DOCUMENTS SHALL GOVERN.

This document, and the designs incorporated herein, is an instrument of professional service that has been developed, designed and prepared by Harutunian Engineering, Inc., and is not to be used, in whole or in part, for any other project without giving written notice to Harutunian Engineering, Inc.

REV	DATE	BY	DESCRIPTION
			CONFORMED DOCUMENTS

DESIGNED HEI
DRAWN HEI
CHECKED HEI
DATE NOVEMBER 2022

** ORIGINAL SEALED BY K.A. HARUTUNIAN 02-28-22 TX PE 59181 **

HARUTUNIAN ENGINEERING INCORPORATED
ENGINEERING AND ENVIRONMENTAL CONSULTANTS
8100 CROSS PARK DRIVE
AUSTIN, TEXAS 78754
TBPE REGISTRATION NO. F-2408
TBPELS No. F-882

CITY OF AUSTIN

CITY OF AUSTIN
WILD HORSE RANCH WWTP EXPANSION
INSTRUMENTATION
INSTRUMENTATION TYPICAL DETAILS - 4

VERIFY SCALES
BAR IS ONE INCH ON ORIGINAL DRAWING
0 1"
IF NOT ONE INCH ON THIS SHEET, ADJUST SCALES ACCORDINGLY

JOB NO. 10976A.00
DRAWING NO. 00TN04
SHEET NO. 93 OF 464

DETAIL NOTES

1. CONTRACTOR SHALL FURNISH AND INSTALL PROPOSED WELD-O-LET PROCESS PIPING SAMPLE PORT. COORDINATE WITH PROCESS PIPING TO PROVIDE PROPER PRODUCT TO MATCH EXISTING RATINGS/MATERIALS. PREPARE AND WELD INTO PLACE PER SPECIFICATIONS. COORDINATE EXACT LOCATION OF SAMPLE PORT WITH ENGINEER/OWNERS REPRESENTATIVE.
2. LOCATION/ROUTES OF PRESSURE INSTRUMENTATION RELATED TUBING AND VALVES FOR REPRESENTATION ONLY. EXACT LOCATIONS/ROUTES TO BE DETERMINED BY FIELD CONDITIONS. CONTRACTOR SHALL FURNISH ALL REQUIRED TUBING, VALVES, STRAPPING, SUPPORT MATERIALS, AND MOUNTING HARDWARE TO PROVIDE A COMPLETE AND MECHANICALLY SOUND INSTALLATION. COORDINATE AND FURNISH THE REQUIRED LENGTH OF TUBING REQUIRED FOR EACH RESPECTIVE LOCATION. REFER TO PLAN DRAWINGS FOR LOCATION OF RESPECTIVE TRANSMITTER MOUNTING RACK.
3. PROPOSED 3/8" STAINLESS STEEL ISOLATION VALVE. INSTALL WITHIN 12 INCHES OF THE SAMPLE PORT.

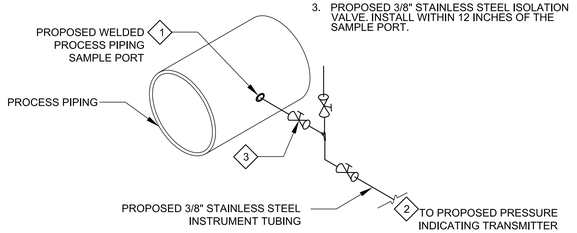

N913 TYP — PRESSURE ELEMENT AT NEW SAMPLE PORT INSTALLATION DETAIL

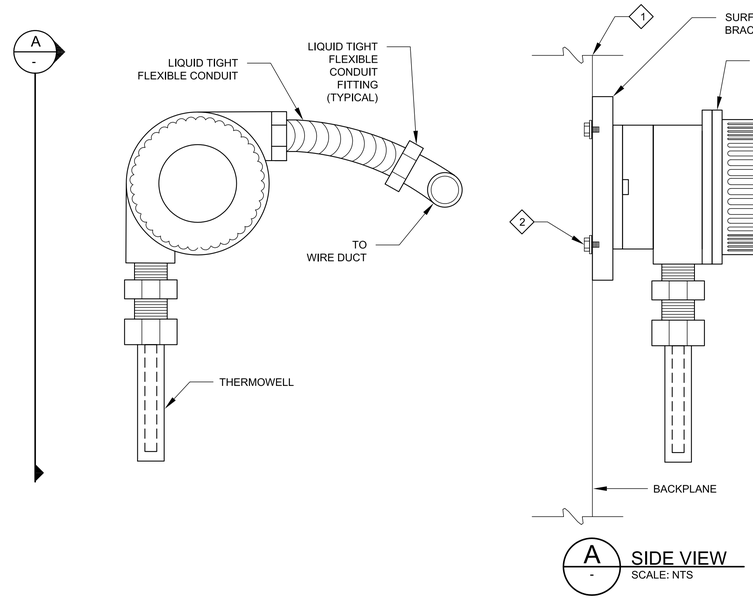

N914 TYP — CONTROL PANEL TEMPERATURE INDICATING TRANSMITTER AND ELEMENT INSTALLATION DETAIL

DETAIL NOTES

1. ATTACH TRANSMITTER TO BACKPLANE BEFORE INSTALLING BACKPLANE.
2. SECURE TRANSMITTER TO BACKPLANE WITH STAINLESS STEEL SCREWS.

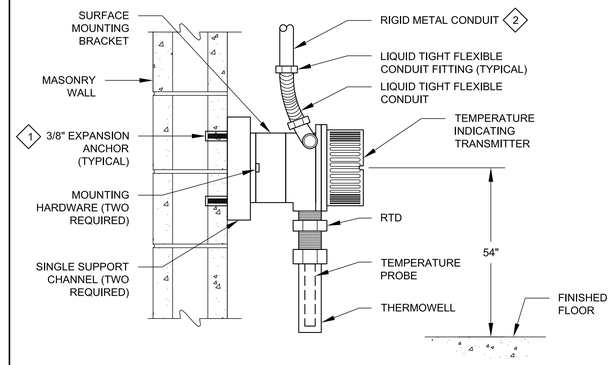

N915 TYP — AMBIENT TEMPERATURE INDICATING TRANSMITTER AND ELEMENT INSTALLATION DETAIL

DETAIL NOTES

1. SUPPORT CHANNEL FROM STRUCTURE SIMILAR TO DETAIL E914/[00TE06].
2. POINT OF CONDUIT ENTRY SHOWN FOR REPRESENTATION ONLY. ACTUAL POINT OF CONDUIT ENTRY AS WELL AS QUANTITY AND SIZE OF CONDUIT MAY VARY WITH EACH APPLICATION.

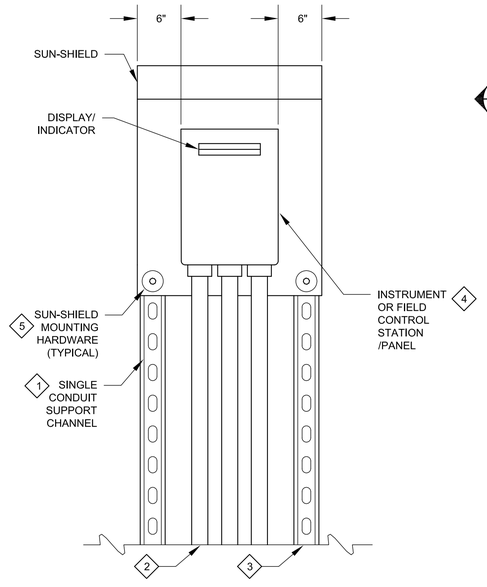

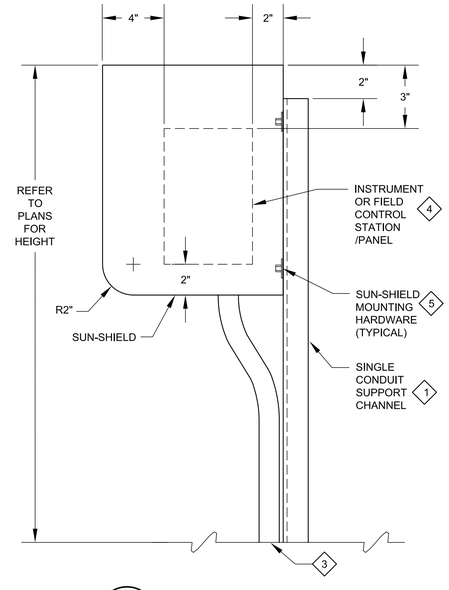

N916 TYP — SUNSHIELD MOUNTING DETAIL

DETAIL NOTES

1. THE STRUCTURE TYPE TO WHICH EQUIPMENT AND/OR SUPPORT SYSTEMS SHALL BE MOUNTED MAY VARY. THE EQUIPMENT ANCHOR TYPE SHALL CORRESPOND TO THE TYPE OF STRUCTURE TO WHICH THE EQUIPMENT AND/OR SUPPORT SYSTEMS ARE ATTACHED. THE DRAWING REFLECTS A SPECIFIC STRUCTURE TYPE WITH CORRESPONDING ANCHOR TYPE AND IS TYPICAL FOR THE STRUCTURE TYPE SHOWN. TO ATTACH EQUIPMENT/SUPPORT SYSTEMS TO PRE-CAST/CAST-IN-PLACE CONCRETE WALL/FLOOR SLAB STRUCTURE TYPES, FURNISH AND INSTALL BOLT WITH EXPANSION INSERT ANCHOR. TO ATTACH EQUIPMENT/SUPPORT SYSTEMS TO A CONCRETE MASONRY UNIT (CMU)/BRICK WALL STRUCTURE TYPE, FURNISH AND INSTALL BOLT WITH EXPANSION ANCHOR. TO ATTACH EQUIPMENT/SUPPORT SYSTEMS TO STEEL STRUCTURE TYPE, FURNISH AND INSTALL BOLTING ASSEMBLY. COORDINATE ATTACHMENT REQUIREMENTS WITH STRUCTURAL.
2. PROPOSED CONDUIT CONTINUES. QUANTITY OF CONDUITS SHOWN IS FOR ILLUSTRATION PURPOSES ONLY. REFER TO PLANS.
3. SUPPORT CHANNEL CONTINUES TO FINISHED FLOOR AND ATTACHES WITH POST BASE FITTINGS. LAYOUT AND LOCATIONS MAY VARY AND MAY REQUIRE ADDITIONAL SUPPORT METHODS. CAREFULLY COORDINATE THE NEED FOR SUCH AND FURNISH AND INSTALL AT NO ADDITIONAL COST TO THE OWNER.
4. INSTRUMENT OR FIELD CONTROL STATION/PANEL SHALL BE MOUNTED INDEPENDENT AND SEPARATE FROM THE SUN-SHIELD AND SUN-SHIELD SUPPORT STRUCTURAL ELEMENTS. REFER TO INSTRUMENT OR FIELD CONTROL STATION/PANEL SUPPORT SYSTEM PLANS AND SPECIFICATION FOR ADDITIONAL REQUIREMENTS. INSTRUMENT OR FIELD CONTROL STATION/PANEL SIZE SHOWN IS FOR REPRESENTATION ONLY. ACTUAL INSTRUMENT OR FIELD CONTROL STATION/PANEL DIMENSIONS VARY. COORDINATE EXACT ELEVATION OF EACH RESPECTIVE INSTRUMENT OR FIELD CONTROL STATION/PANEL WITHIN CONFINES OF SUN-SHIELD IN ORDER TO PROVIDE MAXIMUM SUN-SHIELDING OF DISPLAY/INDICATOR, WHILE MAINTAINING A REASONABLE LINE-OF-SIGHT TO DISPLAY/INDICATOR. COORDINATE THIS FINAL ELEVATION WITH OWNER'S REPRESENTATIVE PRIOR TO INSTALLATION.
5. MOUNT PROPOSED SUNSHIELD TO PROPOSED CONDUIT SUPPORT CHANNEL WITH MINIMUM 1/4" HARDWARE.

THIS CONFORMED DOCUMENT IS RELEASED FOR THE CONVENIENCE OF THE CONTRACTOR UNDER THE AUTHORITY OF:

K. A. HARUTUNIAN, P.E.
TX LIC NO. 59181

11-01-22
DATE

SEE DISCLAIMER FOR LIMITATIONS OF USE.

CONTRACT DOCUMENTS DATED FEBRUARY 28, 2022, AS PART OF THE BIDDING DOCUMENTS (DRAWINGS AND SPECIFICATIONS) AND SUBSEQUENTLY ISSUED ADDENDA HAVE BEEN MERGED INTO ONE CONFORMING SET OF DOCUMENTS FOR THE CONVENIENCE OF THE CONTRACTOR. IF INCONSISTENCIES OR AMBIGUITIES BETWEEN "CONFORMED" DOCUMENTS AND CONTRACT DOCUMENTS ARE FOUND, THE CONTRACT DOCUMENTS SHALL GOVERN.

This document, and the designs incorporated herein, is an instrument of professional service that has been developed, designed and prepared by Harutunian Engineering, Inc., and is not to be used, in whole or in part, for any other project without giving written notice to Harutunian Engineering, Inc.

REV	DATE	BY	DESCRIPTION
			CONFORMED DOCUMENTS

DESIGNED HEI
DRAWN HEI
CHECKED HEI
DATE NOVEMBER 2022

** ORIGINAL SEALED BY K.A. HARUTUNIAN 02-28-22 TX PE 59181 **

HARUTUNIAN ENGINEERING INCORPORATED
ENGINEERING AND ENVIRONMENTAL CONSULTANTS
8100 CROSS PARK DRIVE
AUSTIN, TEXAS 78754
TBPE REGISTRATION NO. F-2408

carollo
TBPELS No. F-882

CITY OF AUSTIN
FOUNDED 1839
CITY OF AUSTIN

CITY OF AUSTIN
WILD HORSE RANCH WWTP EXPANSION
INSTRUMENTATION
INSTRUMENTATION TYPICAL DETAILS - 5

VERIFY SCALES
BAR IS ONE INCH ON ORIGINAL DRAWING
0 1"
IF NOT ONE INCH ON THIS SHEET, ADJUST SCALES ACCORDINGLY

JOB NO. 10976A.00
DRAWING NO. 00TN05
SHEET NO. 94 OF 464

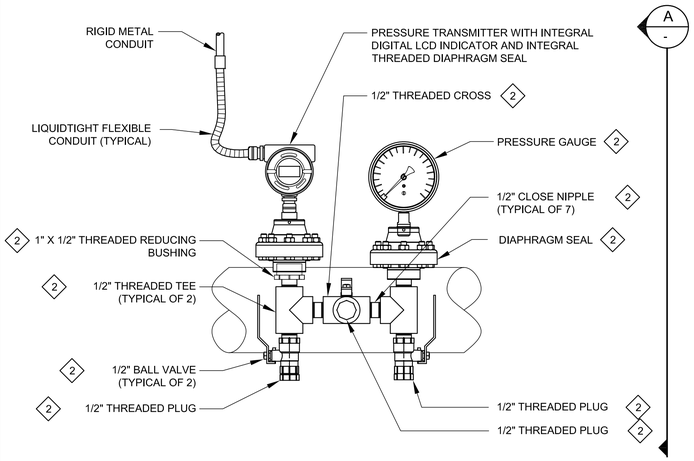

N917 TYP — PRESSURE INDICATING TRANSMITTER/GAUGE DEVICE TREE (FRONT VIEW)

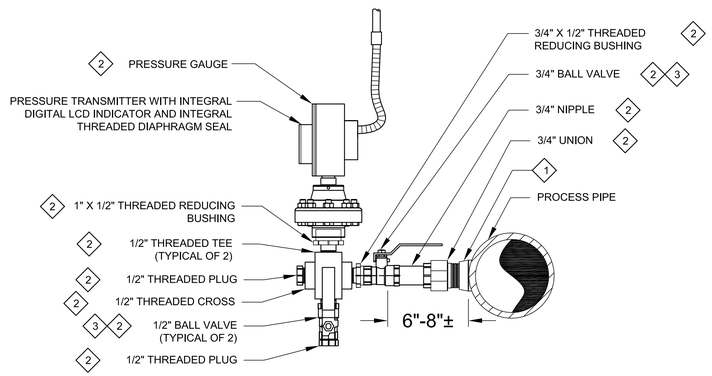

A - PRESSURE INDICATING TRANSMITTER/GAUGE ASSEMBLY (SIDE VIEW)
SCALE: NTS

DETAIL NOTES

1. PROVIDE NPT THREADED CONNECTION SAME SIZE AS PRESSURE PORT PIPE SPOOL. FOR PROCESS PIPING, REFER TO MECHANICAL DETAILS AND SPECIFICATIONS FOR PIPE THREADED OUTLET PIPE-O-LET OR T-FITTING AND OTHER REQUIREMENTS FOR CONNECTION TO PROCESS PIPING.
2. REFER TO MECHANICAL FOR MATERIAL TYPE, MANUFACTURER AND MODEL, AND ADDITIONAL INFORMATION.
3. DO NOT OBSTRUCT ACCESS REQUIRED FOR THE COMPLETE OPERATION OF THE BALL VALVE. FOR THE FULL PATH OF TRAVEL OF THE VALVE HANDLE, PROVIDE A MINIMUM 4-INCH UNOBSTRUCTED CLEARANCE BETWEEN THE VALVE HANDLE AND ANY SUN-SHIELD/HOOD AND/OR OTHER ELEMENTS THAT MAY BE REQUIRED FOR THIS INSTALLATION.

GENERAL NOTES:

1. FOR LIQUID PROCESS FLUID, MOUNT ASSEMBLY ON SIDE OF HORIZONTAL PIPE IN PROXIMITY TO PUMP.
2. FOR AIR/GAS PROCESS FLUID, MOUNT ASSEMBLY ON TOP OF HORIZONTAL PIPE IN PROXIMITY TO PUMP AND ROTATE PRESSURE DEVICE TREES 90 DEGREES FROM THAT SHOWN ON THIS DETAIL TO FACILITATE VISIBILITY OF PRESSURE INDICATING TRANSMITTER AND PRESSURE GAUGE.

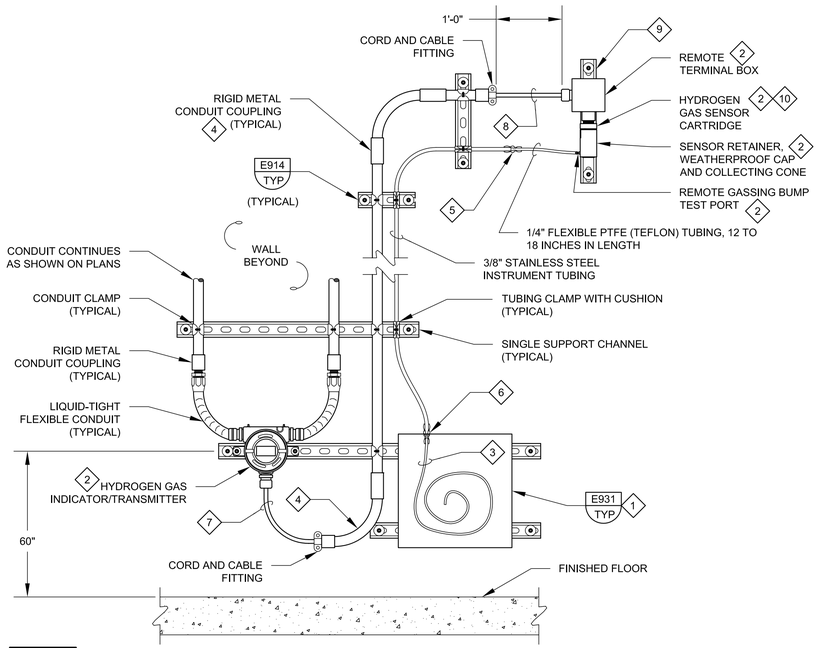

N918 TYP — HYDROGEN SENSOR/TRANSMITTER DETAIL

DETAIL NOTES

1. FURNISH AND INSTALL PULL BOX MINIMALLY SIZED 12" X 12" X 6" WITH HINGED ACCESS DOOR AND LOCKING HAND QUADRANT DOOR HANDLE.
2. FURNISHED BY TRANSMITTER MANUFACTURER. INSTALL AND MAKE ALL FINAL CONNECTIONS PER MANUFACTURERS REQUIREMENTS.
3. COIL FIVE FEET OF 1/4" FLEXIBLE PTFE (TEFLON) TUBING INSIDE PULL BOX FOR CONNECTION TO CALIBRATION KIT. REFER TO SPECIFICATIONS. WHERE EXTRA/UNUSED PTFE (TEFLON) LENGTH OF OF SPECIFIED QUANTITY OF TUBING REMAINS, CUT, NEATLY COIL AND ZIP-TIE THE EXTRA/UNUSED LENGTH OF TUBING AND STORE IN PULL BOX FOR FUTURE USE BY THE OWNER.
4. FURNISH AND INSTALL INTERCONNECTING CONDUIT/WIRE BETWEEN TRANSMITTER AND SENSOR ASSEMBLY. COORDINATE WIRING REQUIREMENTS WITH MANUFACTURER.
5. FURNISH AND INSTALL TUBE INSERT AND REDUCING FITTING TO TRANSITION FROM 1/4" FLEXIBLE TUBING TO 3/8" RIGID TUBING.
6. FURNISH AND INSTALL TUBE INSERT AND REDUCING BULKHEAD FITTING TO CONNECT TO PULL BOX AND TRANSITION FROM 3/8" RIGID TUBING TO 1/4" FLEXIBLE TUBING.
7. ROUTE THIS SEGMENT OF FACTORY FURNISHED CABLE EXPOSED. LENGTH OF EXPOSED CABLE SHALL BE 12 TO 20 INCHES.
8. ROUTE THIS SEGMENT OF FACTORY FURNISHED CABLE EXPOSED. INSTALL FULL LENGTH OF FACTORY FURNISHED CABLE. REFER TO SPECIFICATION FOR MINIMUM CABLE LENGTH. DO NOT CUT UNUSED/EXTRA CABLE LENGTH. ALTHOUGH COILING NOT SHOWN IN SCHEMATIC, NEATLY COIL ANY EXTRA LENGTH OF CABLE AND ZIP-TIE THE COILED CABLE TO THE ADJACENT CONDUIT.
9. FASTEN REMOTE TERMINAL BOX WALL VIA CHANNEL SUPPORT. OFFSET THE REMOTE TERMINAL BOX FROM THE WALL WITH MULTIPLE LAYERS OF CHANNEL SEGMENTS AS REQUIRED TO ALLOW THE SENSOR, WEATHERPROOF CAP AND COLLECTING CONE TO CLEAR AND NOT CONFLICT WITH ADJOINING WALL.
10. MOUNT HYDROGEN SENSOR WITHIN 6 INCHES OF OVERHEAD ROOM CEILING/ROOF DECK.

THIS CONFORMED DOCUMENT IS RELEASED FOR THE CONVENIENCE OF THE CONTRACTOR UNDER THE AUTHORITY OF:

K. A. Harutunian — 11-01-22

K. A. HARUTUNIAN, P.E. — DATE
TX LIC NO. 59181

SEE DISCLAIMER FOR LIMITATIONS OF USE.

CONTRACT DOCUMENTS DATED FEBRUARY 28, 2022, AS PART OF THE BIDDING DOCUMENTS (DRAWINGS AND SPECIFICATIONS) AND SUBSEQUENTLY ISSUED ADDENDA HAVE BEEN MERGED INTO ONE CONFORMING SET OF DOCUMENTS FOR THE CONVENIENCE OF THE CONTRACTOR. IF INCONSISTENCIES OR AMBIGUITIES BETWEEN "CONFORMED" DOCUMENTS AND CONTRACT DOCUMENTS ARE FOUND, THE CONTRACT DOCUMENTS SHALL GOVERN.

This document, and the designs incorporated herein, is an instrument of professional service that has been developed, designed and prepared by Harutunian Engineering, Inc., and is not to be used, in whole or in part, for any other project without giving written notice to Harutunian Engineering, Inc.

REV	DATE	BY	DESCRIPTION

CONFORMED DOCUMENTS

DESIGNED HEI
DRAWN HEI
CHECKED HEI
DATE NOVEMBER 2022

** ORIGINAL SEALED BY K.A. HARUTUNIAN 02-28-22 TX PE 59181 **

HARUTUNIAN ENGINEERING INCORPORATED
ENGINEERING AND ENVIRONMENTAL CONSULTANTS
8100 CROSS PARK DRIVE AUSTIN, TEXAS 78754
TBPE REGISTRATION NO. F-2408
TBPELS No. F-882

CITY OF AUSTIN
WILD HORSE RANCH WWTP EXPANSION
INSTRUMENTATION
INSTRUMENTATION TYPICAL DETAILS - 6

VERIFY SCALES
BAR IS ONE INCH ON ORIGINAL DRAWING
0 1"
IF NOT ONE INCH ON THIS SHEET, ADJUST SCALES ACCORDINGLY

JOB NO. 10976A.00
DRAWING NO. 00TN06
SHEET NO. 95 OF 464

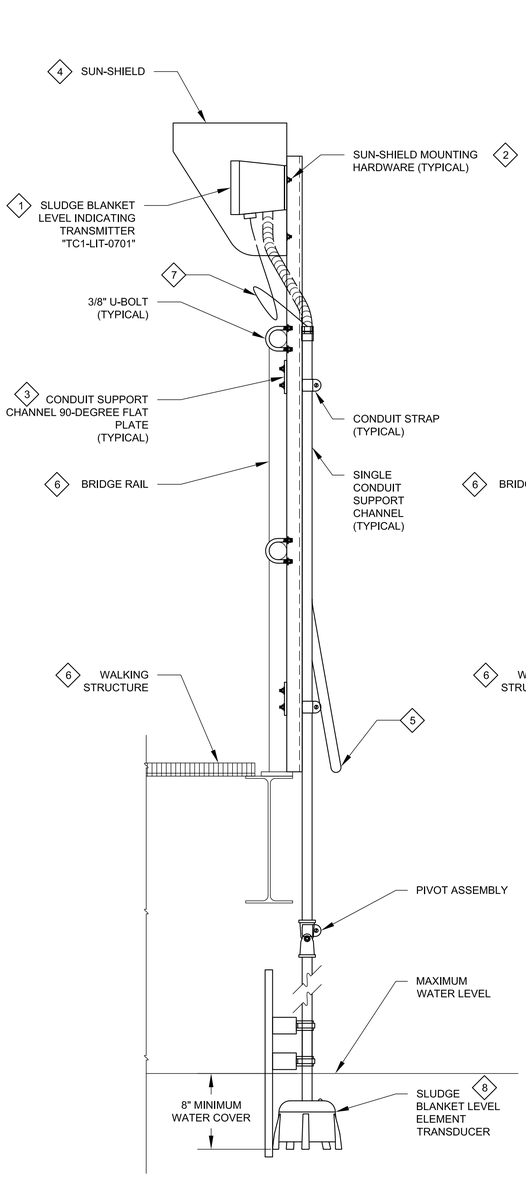

A
-
SECTION A
SCALE: NTS

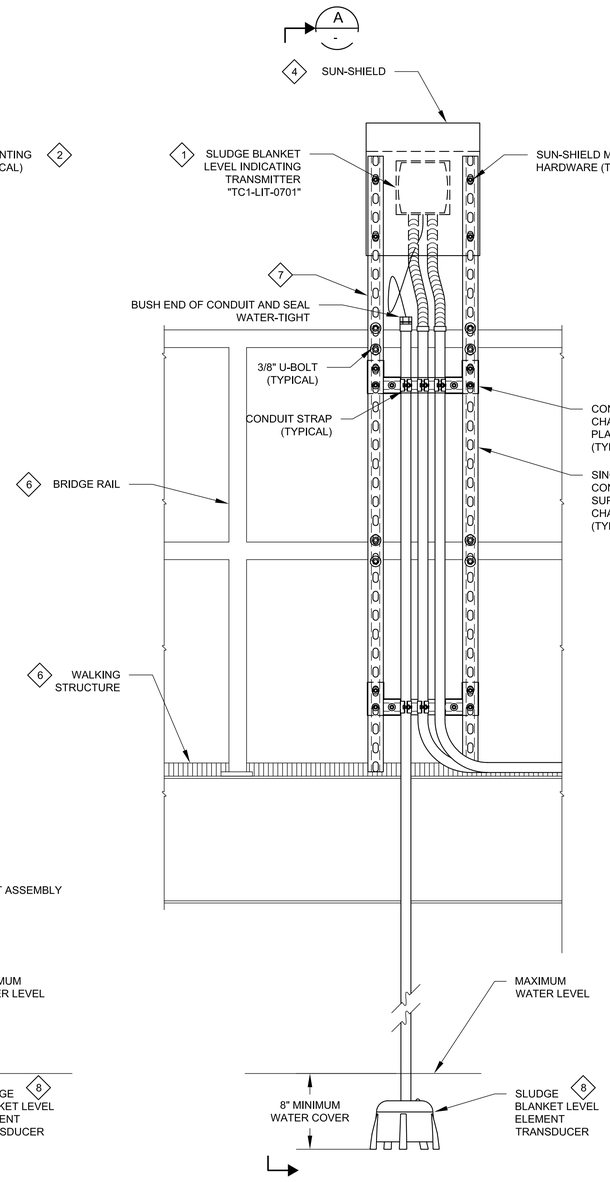

N919 TYP SLUDGE BLANKET LEVEL ELEMENT AND TRANSMITTER MOUNTING DETAIL

DETAIL NOTES

1. MOUNT INSTRUMENT TO FABRICATED SUN-SHIELD WITH HARDWARE SIZED PER THE MANUFACTURER'S RECOMMENDATION. USE FLAT WASHERS AND LOCK WASHERS AT EACH MOUNTING LOCATION. INSTRUMENT SIZE SHOWN IS FOR PRESENTATION ONLY. ACTUAL INSTRUMENTATION DIMENSIONS VARY. COORDINATE EXACT FINAL ELEVATION OF EACH RESPECTIVE INSTRUMENT WITHIN THE CONFINES OF THE SUN-SHIELD IN ORDER TO PROVIDE MAXIMUM SUN-SHIELDING OF DISPLAY, WHILE MAINTAINING A REASONABLE LINE-OF-SIGHT TO DISPLAY. COORDINATE THIS FINAL ELEVATION WITH OWNERS REPRESENTATIVE PRIOR TO INSTALLATION.
2. MOUNT PROPOSED SUN-SHIELD TO PROPOSED CONDUIT SUPPORT CHANNEL WITH MINIMUM 1/4" HARDWARE.
3. PROPOSED 90-DEGREE FLAT PLATE SHALL BE INSTALLED ON BACK SIDE OF MOUNTING RACK TO ALLOW MAXIMUM CONDUIT STRAP SPACE.
4. PROPOSED SUN-SHIELD SHALL HAVE MINIMUM ONE INCH FOAM INSULATION BENEATH TOP PLATE. REFER TO SPECIFICATIONS FOR ADDITIONAL INFORMATION.
5. FOR CONTINUATION OF CONDUIT/WIRE REFER TO PLAN DRAWING.
6. FURNISHED AND INSTALLED BY SLUDGE THICKENER MANUFACTURER.
7. COIL 6' MINIMUM EXCESS CORD AND SECURE/SUPPORT EXPOSED CORD TO SUPPORT CHANNEL /CONDUIT/EQUIPMENT/ETC. WITH WIRE TIES. CORD SUPPLIED BY VENDOR.
8. MOUNT SLUDGE BLANKET LEVEL TRANSDUCER PER MANUFACTURERS REQUIREMENTS.

GENERAL NOTES:

1. PORTIONS OF SLUDGE THICKENER ACCESS BRIDGE AND CONDUIT/WIRE RACK ARE PROVIDED BY THE SLUDGE THICKENER MANUFACTURER. COORDINATE LOCATION OF LIGHT FIXTURES WITH ROUTE OF PROPOSED CONDUIT/WIRE ALONG SLUDGE THICKENER BRIDGE/SIZE OF RACK FURNISHED AND INSTALLED BY SLUDGE THICKENER MANUFACTURER, ETC.
2. FURNISH AND INSTALL ALL EQUIPMENT/HARDWARE/ETC. SHOWN HEREIN UNLESS NOTED OTHERWISE.

THIS CONFORMED DOCUMENT IS RELEASED FOR THE CONVENIENCE OF THE CONTRACTOR UNDER THE AUTHORITY OF:

K. A. HARUTUNIAN, P.E.
TX LIC NO. 59181

11-01-22
DATE

SEE DISCLAIMER FOR LIMITATIONS OF USE.

CONTRACT DOCUMENTS DATED FEBRUARY 28, 2022, AS PART OF THE BIDDING DOCUMENTS (DRAWINGS AND SPECIFICATIONS) AND SUBSEQUENTLY ISSUED ADDENDA HAVE BEEN MERGED INTO ONE CONFORMING SET OF DOCUMENTS FOR THE CONVENIENCE OF THE CONTRACTOR. IF INCONSISTENCIES OR AMBIGUITIES BETWEEN "CONFORMED" DOCUMENTS AND CONTRACT DOCUMENTS ARE FOUND, THE CONTRACT DOCUMENTS SHALL GOVERN.

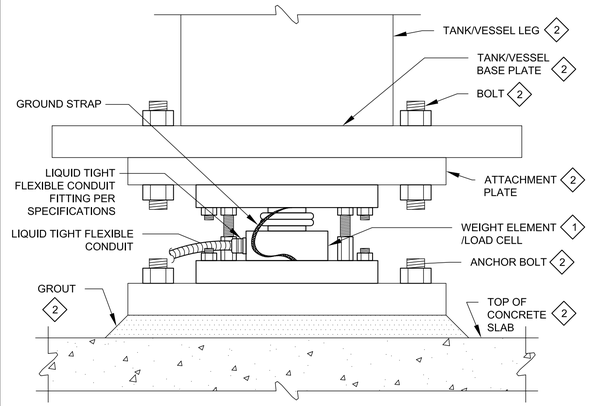

DETAIL NOTES

1. MOUNT WEIGHT ELEMENT/LOAD CELL TO TANK/VESSEL LEG AND TO CONCRETE SLAB PER THE MANUFACTURERS RECOMMENDATIONS AND PER THE REQUIREMENTS OF THE MECHANICAL/STRUCTURAL DRAWINGS AND SPECIFICATIONS. CONTRACTOR TO FURNISH AND INSTALL ALL NECESSARY HARDWARE, PER SPECIFICATIONS, TO INSURE A STRUCTURALLY SOUND INSTALLATION. LIMIT LENGTH OF UNSUPPORTED FLEXIBLE CONDUIT TO A MAXIMUM OF 12". CLOSELY AND CAREFULLY COORDINATE MOUNTING REQUIREMENTS WITH STRUCTURAL/MECHANICAL.

   SHOWN FOR REPRESENTATION ONLY. ACTUAL QUANTITY AND DIMENSIONS OF TANK/VESSEL LEG, ATTACHMENT PLATES, ANCHOR BOLTS, GROUT THICKNESS, AND ASSOCIATED HARDWARE, ETC. MAY VARY. NOT ALL REQUIRED STRUCTURAL COMPONENTS ARE SHOWN FOR CLARITY. REFER TO STRUCTURAL/MECHANICAL DRAWINGS FOR ADDITIONAL INFORMATION.

N920 TYP WEIGHT INDICATING TRANSMITTER INSTALLATION DETAIL

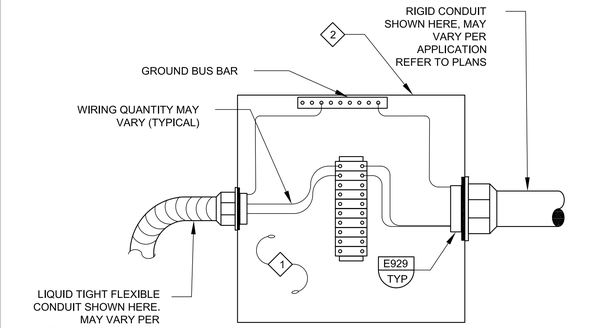

NOTE:
SEAL ALL WIRE TERMINATIONS WITH RAYCHEM ANTI-CORROSION SEALANT OR APPROVED EQUAL.

DETAIL NOTES

1. FURNISH AND INSTALL TERMINAL BLOCKS, INTERNAL WIRING, INTERNAL TAGGING, GROUNDING AND ALL OTHER INTERNAL ASPECTS PER SPECIFICATION SECTION 17200. NUMBER OF TERMINAL BLOCKS MAY VARY PER APPLICATION. REQUIRED NUMBER OF TERMINAL BLOCKS IS NOT SHOWN HERE.
2. FURNISH AND INSTALL JUNCTION BOX ENCLOSURE PER SPECIFICATION SECTION 16130. NOT ALL BOX REQUIREMENTS ARE SHOWN HERE. MINIMUM SIZE BOX SHALL BE 12" X 8" X 6". CONTRACTOR SHALL SIZE ENCLOSURE PER, AND IN ACCORDANCE WITH, THE REQUIREMENTS OF THE NATIONAL ELECTRICAL CODE (N.E.C.).

N921 TYP JUNCTION BOX INSTALLATION DETAIL

This document, and the designs incorporated herein, is an instrument of professional service that has been developed, designed and prepared by Harutunian Engineering, Inc., and is not to be used, in whole or in part, for any other project without giving written notice to Harutunian Engineering, Inc.

REV	DATE	BY	DESCRIPTION
			CONFORMED DOCUMENTS

DESIGNED HEI
DRAWN HEI
CHECKED HEI
DATE NOVEMBER 2022

**
ORIGINAL
SEALED BY
K.A. HARUTUNIAN
02-28-22
TX PE 59181
**

HARUTUNIAN ENGINEERING INCORPORATED
ENGINEERING AND ENVIRONMENTAL CONSULTANTS
8100 CROSS PARK DRIVE
AUSTIN, TEXAS 78754
TBPE REGISTRATION NO. F-2408

carollo
TBPELS No. F-882

CITY OF AUSTIN
FOUNDED 1839

CITY OF AUSTIN
WILD HORSE RANCH WWTP EXPANSION
INSTRUMENTATION
INSTRUMENTATION TYPICAL DETAILS - 7

VERIFY SCALES
BAR IS ONE INCH ON ORIGINAL DRAWING
0 1"
IF NOT ONE INCH ON THIS SHEET, ADJUST SCALES ACCORDINGLY

JOB NO. 10976A.00
DRAWING NO. 00TN07
SHEET NO. 96 OF 464

CONDUIT/WIRE SCHEDULE

CONDUIT TAG	SIZE	CABLE/WIRE DESCRIPTION
AB-AIT-400-I	1"	EMPTY
AB-AIT-400-P	1-1/4"	EMPTY
AB-CP-01	1"	3 #8(P), 1 #8 (N), 1 #8 (G)
AB-XFMR-01-C	1-1/4"	3 #6 (P), 1 #6 (G)
AB-XFMR-1P3-C	1-1/4"	EMPTY
BF-ME-DCE1-C	(1)	(1)
BF-MCP-001-PC	1-1/4"	4 #6 (P), 1 #6 (N), 3 #12 (C), 2 #12 (SPARE), 1 #10 (G)
BF-VF-001-PSH	(1)	(1)
BF-MCP-001-A1	3"	EMPTY
BF-MCP-001-A2	3"	EMPTY
BF-MCP-001-COM1	3"	EMPTY
DB-FE-100-I	1"	VENDOR SUPPLIED CABLE
DB-FIT-100-I	1"	1 #16 2-CONDUCTOR TWISTED PAIR SHIELDED CABLE (I)
DB-TE-100-I	1"	VENDOR SUPPLIED CABLE
EF-FE-900-I	1"	VENDOR SUPPLIED CABLE
EF-FE-900-TE	1"	VENDOR SUPPLIED CABLE
SP-I	1"	4 #16 2-CONDUCTOR TWISTED PAIR SHIELDED CABLE (I)
SP-PC	2"	EMPTY
F1-MCC-OP1L	4"	3 #500 MCM (P), 1 #250 MCM (G)
F1-MCC-OP1R	4"	3 #500 MCM (P), 1 #250 MCM (G)
F1-XFMR-OP1L	(2)	FURNISHED AND INSTALLED BY BLUEBONNET ELECTRIC COOPERATIVE (2)
F1-XFMR-OP1R	(2)	FURNISHED AND INSTALLED BY BLUEBONNET ELECTRIC COOPERATIVE (2)
F1-SP	4"	EMPTY
F2-MCC-OP1L	4"	3 #500 MCM (P), 1 #250 MCM (G)
F2-MCC-OP1R	4"	3 #500 MCM (P), 1 #250 MCM (G)
F2-XFMR-OP1L	(2)	FURNISHED AND INSTALLED BY BLUEBONNET ELECTRIC COOPERATIVE (2)
F2-XFMR-OP1R	(2)	FURNISHED AND INSTALLED BY BLUEBONNET ELECTRIC COOPERATIVE (2)
F3-MCC-OP1L	4"	3 #500 MCM (P), 1 #250 MCM (G)
F3-MCC-OP1R	4"	3 #500 MCM (P), 1 #250 MCM (G)
F4-MCC-OP1L	4"	3 #500 MCM (P), 1 #250 MCM (G)
F4-MCC-OP1R	4"	3 #500 MCM (P), 1 #250 MCM (G)
F5-MCC-OP1L	4"	3 #500 MCM (P), 1 #250 MCM (G)
F5-MCC-OP1R	4"	3 #500 MCM (P), 1 #250 MCM (G)
FC-FC-001-PC	1-1/4"	3 #10 (P), 1 #10 (N), 1 #10 (G), 12 #12 (C), 4 #12 (SPARE), 1 #10 (G)
FC-FC-001-PCSH	(1)	(1)
FC-FC-002-PC	1-1/4"	EMPTY
FC-NS-FC1-C	(1)	(1)
FI-BWP-F1-C	(1)	(1)
FI-BWP-F2-P	(1)	(1)
FI-F-001-PC	1-1/4"	3 #8 (P), 1 #8 (N), 3 #12 (C), 2 #12 (SPARE)
FI-F-001-PCT	(1)	(1)
FI-F-002-PC	1-1/4"	3 #8 (P), 1 #8 (N), 4 #12 (C), 2 #12 (SPARE)
FI-F-002-PCT	(1)	(1)
FI-F-003-PC	1-1/4"	EMPTY
FI-F-003-PCT	1-1/4"	EMPTY
FI-LE-700-I	(1)	(1)
FI-LE-701-I	(1)	(1)
FI-LE-702-I	(1)	(1)
FI-LE-703-I	(1)	(1)
FI-LE-710-I	(1)	(1)
FI-LE-711-I	(1)	(1)
FI-LE-712-I	(1)	(1)
FI-LE-713-I	(1)	(1)
FI-RD-F1-P	(1)	(1)
FI-RD-F2-P	(1)	(1)
FI-SFP-F1-P	(1)	(1)
FI-SFP-F2-P	(1)	(1)

CONDUIT/WIRE SCHEDULE

CONDUIT TAG	SIZE	CABLE/WIRE DESCRIPTION
FI-WRP-F1-P	(1)	(1)
FI-WRP-F2-P	(1)	(1)
FI-ZS-700-C	(1)	(1)
FI-ZS-710-C	(1)	(1)
LS-AS-001-C	1-1/2"	7 #12 (C), 1 #12 (SPARE), 1 #10 (G)
LS-DB-001-I	1-1/4"	5 #16 2-CONDUCTOR TWISTED PAIR SHIELDED CABLE (I)
LS-FI-001-P	1"	3 #8 (P), 1 #10 (G)
LS-LE-200-I	1"	VENDOR SUPPLIED CABLE
LS-LS-200-C	1"	2 VENDOR PROVIDED CABLES
LS-LS-210-C	1"	VENDOR PROVIDED CABLE
LS-LS-220-C	1"	VENDOR PROVIDED CABLE
LS-LS-230-C	1"	VENDOR PROVIDED CABLE
LS-LS-240-C	1"	EMPTY
LS-LS-250-C	1"	EMPTY
LS-LSP-001-AC	1-1/2"	24 #12 (C), 1 #12 (SPARE), 1 #10 (G)
LS-LSP-001-C1	1-1/4"	7 #12 (C), 2 #12 (SPARE), 1 #10 (G)
LS-LSP-001-D2	1"	VENDOR PROVIDED CABLE
LS-LSP-001-P	1-1/4"	3 #2 (P), 1 #4 (G)
LS-LSP-002-C	1-1/2"	24 #12 (C), 1 #12 (SPARE), 1 #10 (G)
LS-LSP-002-C1	1-1/4"	7 #12 (C), 2 #12 (SPARE), 1 #10 (G)
LS-LSP-002-D2	1"	VENDOR PROVIDED CABLE
LS-LSP-002-P	1-1/4"	3 #2 (P), 1 #4 (G)
LS-LSP-003-C	1-1/2"	24 #12 (C), 1 #12 (SPARE), 1 #10 (G)
LS-LSP-003-C1	1-1/4"	7 #12 (C), 2 #12 (SPARE), 1 #10 (G)
LS-LSP-003-D2	1"	VENDOR PROVIDED CABLE
LS-LSP-003-P	1-1/4"	3 #2 (P), 1 #4 (G)
LS-LSP-004-C	1-1/2"	EMPTY
LS-LSP-004-C1	1-1/4"	EMPTY
LS-LSP-004-D2	1"	EMPTY
LS-LSP-004-P	1-1/4"	EMPTY
LS-LSP-005-C	1-1/2"	EMPTY
LS-LSP-005-C1	1-1/4"	EMPTY
LS-LSP-005-D2	1"	EMPTY
LS-LSP-005-P	1-1/4"	EMPTY
LS-XT-006-I	1"	1 #16 2-CONDUCTOR TWISTED PAIR SHIELDED CABLE (I)
NPW-CS-001-C	1"	7 #12 (C), 2 #12 (SPARE), 1 #10 (G)
NPW-CS-002-C	1"	7 #12 (C), 2 #12 (SPARE), 1 #10 (G)
NPW-NP-001-P	1"	3 #8 (P), 1 #10 (G)
NPW-NP-002-PC	1-1/4"	3 #8 (P), 1 #10 (N), 1 #12 (C), 3 #12 (SPARE), 1 #10 (G)
NPW-NP-003-P	1"	3 #8 (P), 1 #10 (G)
NPW-NP-004-PC	1-1/4"	3 #8 (P), 1 #10 (N), 1 #12 (C), 3 #12 (SPARE), 1 #10 (G)
NPW-PIT-7000-I	1"	1 #16 2-CONDUCTOR TWISTED PAIR SHIELDED CABLE (I)
OP-ACU-001-P	1"	3 # 10 (P), 1 #10 (G)
OP-ACU-002-P	1"	3 #10 (P), 1 #10 (G)
OP-ACU-003-P	1"	3 #10 (P), 1 #10 (G)
OP-ATS1-EF1	2-1/2"	3 #250 MCM (P), 1 #2 (G)
OP-ATS1-EF2	2-1/2"	3 #250 MCM (P), 1 #2 (G)
OP-ATS1-NF1	2-1/2"	3 #250 MCM (P), 1 #2 (G)
OP-ATS1-NF2	2-1/2"	3 #250 MCM (P), 1 #2 (G)
OP-CHFP-001-IC	3/4"	1 #16 2-CONDUCTOR TWISTED PAIR SHIELDED CABLE (I)
OP-CHFP-002-IC	3/4"	1 #16 2-CONDUCTOR TWISTED PAIR SHIELDED CABLE (I)
OP-CHFP-IC1	1"	3 #16 2-CONDUCTOR TWISTED PAIR SHIELDED CABLE (I)
OP-CPP1-P1	2"	3 #1 (P), 1 #1 (N), 1 #1 (IG), 1 #6(G)
OP-CS-EF2-C	1"	7 #12 (C), 2 #12 (SPARE), 1 #10 (G)
OP-CS-EF3-C	1"	7 #12 (C), 2 #12 (SPARE), 1 #10 (G)
OP-CS-EF4-C	1"	7 #12 (C), 2 #12 (SPARE), 1 #10 (G)
OP-CS-SWP1-C	1"	9 #12 (C), 2 #12 (SPARE), 1 #10 (G)
OP-DCF-001-C	1-1/4"	9 #12 (C), 2 #12 (SPARE), 1 #10 (G)

KEY NOTES:

(1) THE CONTRACTOR SHALL SIZE PROPOSED CONDUIT/WIRE PER THE SPECIFICATIONS. THE CONTRACTOR SHALL FURNISH AND INSTALL ALL NECESSARY CONDUIT/WIRE PER THE MANUFACTURER'S WIRING DIAGRAMS AND RECOMMENDATIONS AND MAKE ALL FINAL CONNECTIONS. CLOSELY AND CAREFULLY COORDINATE DEVICE CONDUIT/WIRE REQUIREMENTS AND CONNECTION REQUIREMENTS WITH THE MANUFACTURER'S WIRING DIAGRAMS AND THE SPECIFICATIONS AND MAKE ALL FINAL CONNECTIONS.

(2) CONDUIT/WIRE IS SIZED, FURNISHED, AND INSTALLED BY BLUEBONNET ELECTRIC COOPERATIVE. ACTUAL CONDUIT/WIRE QUANTITY MAY VARY. CLOSELY AND CAREFULLY COORDINATE ALL REQUIREMENTS WITH BLUEBONNET ELECTRIC COOPERATIVE.

GENERAL NOTES:

1. CLOSELY AND CAREFULLY COORDINATE ALL REQUIREMENTS WITH THE APPLICABLE EQUIPMENT MANUFACTURER/HVAC/MECHANICAL, THE SPECIFICATIONS, AND MAKE ALL FINAL CONNECTIONS.
2. CLOSELY AND CAREFULLY COORDINATE ALL ELECTRICAL SERVICE RELATED CONDUIT/WIRE REQUIREMENTS WITH BLUEBONNET ELECTRIC COOPERATIVE AND MAKE ALL FINAL CONNECTIONS.
3. CLOSELY AND CAREFULLY COORDINATE VENDOR SUPPLIED CABLE REQUIREMENTS WITH THE EQUIPMENT MANUFACTURER AND MAKE ALL FINAL CONNECTIONS.

RECORD DRAWING
THIS CONSTRUCTION DOCUMENT WAS PREPARED USING INFORMATION SUPPLIED BY THE CONTRACTOR TO REPRESENT CONSTRUCTION CHANGES. THIS DOCUMENT IS FOR INFORMATION AND REFERENCE IN CONNECTION WITH THE OWNER'S USE AND OCCUPANCY OF THE PROJECT AND IS NOT INTENDED FOR BID, PERMIT OR CONSTRUCTION.
BY: K. A. Harutunian DATE: 1/5/2023

REUSE OF DOCUMENTS
This document and the ideas and designs incorporated herein as an instrument of professional service has been developed, designed and prepared by Harutunian Engineering, Inc. and is not to be used, in whole or part, for any other project without the written authorization of the City of Austin and Harutunian Engineering, Inc. © 2003

HARUTUNIAN ENGINEERING INCORPORATED
ENGINEERING AND ENVIRONMENTAL CONSULTANTS
305 EAST HUNTLAND DRIVE, SUITE 300, AUSTIN, TEXAS 78752

NO.	DATE	REVISION	APPROV.
4			
3			
2			
1			

WARNING: IF THIS BAR DOES NOT MEASURE 1" THEN DRAWING IS NOT TO SCALE (0, 1/2, 1)

K. A. HARUTUNIAN, 59181, STATE OF TEXAS, REGISTERED PROFESSIONAL ENGINEER
10/15/2003

Dwg. No. RE-33

CITY OF AUSTIN, TEXAS
NORTHEAST INTERIM WASTEWATER TREATMENT PLANT
OPERATIONS BUILDING CONDUIT/WIRE SCHEDULES (SHEET 1 OF 2)
Turner Collie & Braden Inc.
ENGINEERS • PLANNERS • PROJECT MANAGERS

Unit PUBLIC WORKS	Scale NONE	Date OCTOBER 2003	
Designed HEI	Checked HEI	Job No. 052-122094-0008	
Drawn HEI	Approved HEI	Sheet 247/917	

KEY NOTES

1. DISCONNECT AND REMOVE CABLE/WIRE IN ITS ENTIRETY.
2. CONDUIT SHALL BE PARTIALLY DEMOLISHED AND EXTENDED DURING RENOVATION ACTIVITIES. REFER TO PLANS FOR ADDITIONAL INFORMATION.
3. CONDUIT SHALL BE PARTIALLY DEMOLISHED, CAPPED, AND ABANDONED IN PLACE. REFER TO PLANS FOR ADDITIONAL INFORMATION.
4. EXISTING EMPTY CONDUIT TO BE REUSED DURING RENOVATION ACTIVITIES. REFER TO RENOVATION DRAWINGS FOR ADDITIONAL INFORMATION .

THIS CONFORMED DOCUMENT IS RELEASED FOR THE CONVENIENCE OF THE CONTRACTOR UNDER THE AUTHORITY OF:

K. A. Harutunian — 11-01-22
K. A. HARUTUNIAN, P.E. — DATE
TX LIC NO. 59181

SEE DISCLAIMER FOR LIMITATIONS OF USE.

CONTRACT DOCUMENTS DATED FEBRUARY 28, 2022, AS PART OF THE BIDDING DOCUMENTS (DRAWINGS AND SPECIFICATIONS) AND SUBSEQUENTLY ISSUED ADDENDA HAVE BEEN MERGED INTO ONE CONFORMING SET OF DOCUMENTS FOR THE CONVENIENCE OF THE CONTRACTOR. IF INCONSISTENCIES OR AMBIGUITIES BETWEEN "CONFORMED" DOCUMENTS AND CONTRACT DOCUMENTS ARE FOUND, THE CONTRACT DOCUMENTS SHALL GOVERN.

This document, and the designs incorporated herein, is an instrument of professional service that has been developed, designed and prepared by Harutunian Engineering, Inc., and is not to be used, in whole or in part, for any other project without giving written notice to Harutunian Engineering, Inc.

REV	DATE	BY	DESCRIPTION
			CONFORMED DOCUMENTS

DESIGNED HEI
DRAWN HEI
CHECKED HEI
DATE NOVEMBER 2022

** ORIGINAL SEALED BY K.A. HARUTUNIAN 02-28-22 TX PE 59181 **

HARUTUNIAN ENGINEERING INCORPORATED
ENGINEERING AND ENVIRONMENTAL CONSULTANTS
8100 CROSS PARK DRIVE AUSTIN, TEXAS 78754
TBPE REGISTRATION NO. F-2408

carollo
TBPELS No. F-882

CITY OF AUSTIN — FOUNDED 1839

CITY OF AUSTIN

CITY OF AUSTIN
WILD HORSE RANCH WWTP EXPANSION
DEMOLITION
CONDUIT/WIRE SCHEDULES
DEMOLITION - 1

VERIFY SCALES
BAR IS ONE INCH ON ORIGINAL DRAWING (0, 1")
IF NOT ONE INCH ON THIS SHEET, ADJUST SCALES ACCORDINGLY

JOB NO. 10976A.00
DRAWING NO. 00DE01
SHEET NO. 97 OF 464

CONDUIT/WIRE SCHEDULE

CONDUIT TAG	SIZE	CABLE/WIRE DESCRIPTION
OP-EF-002-PC	1-1/4"	3 #10 (P), 1 #10 (G), 1 #10 (G), 10 #12 (C), 3 #12 (SPARE)
OP-EF-002-P	1"	3 #10 (P), 1 #10 (G)
OP-EF-003-C	1"	10 #12 (C), 3 #12 (SPARE), 1 #10 (G)
OP-EF-003-PC	1-1/4"	3 #10 (P), 1 #10 (G), 1 #10 (G), 10 #12 (C), 3 #12 (SPARE)
OP-EF-003-P	1"	3 #10 (P), 1 #10 (G)
OP-EF-004-C	1"	10 #12 (C), 3 #12 (SPARE), 1 #10 (G)
OP-EF-004-PC	1-1/4"	3 #10 (P), 1 #10 (G), 1 #10 (G), 10 #12 (C), 3 #12 (SPARE)
OP-EF-004-P	1"	3 #10 (P), 1 #10 (G)
OP-EF-01	1-1/2"	1 #250 MCM TW GREEN INSULATED CABLE (G)
OP-FSH-1600-C	1"	2 #12 (C), 1 #12 (SPARE), 1 #10 (G)
OP-FSH-1601-C	1"	2 #12 (C), 1 #12 (SPARE), 1 #10 (G)
OP-FSH-160X-C	1"	4 #12 (C), 2 #12 (SPARE), 1 #10 (G)
OP-GEN-MCC1-P1	2-1/2"	3 #250 MCM (P), 1 #2 (G)
OP-GEN-MCC1-P2	2-1/2"	3 #250 MCM (P), 1 #2 (G)
OP-GEN-MCC1R-P1	2-1/2"	3 #250 MCM (P), 1 #2 (G)
OP-H-001-P	1"	3 #10 (P), 1 #10 (G)
OP-HH1-01	1-1/2"	1 #250 MCM TW GREEN INSULATED CABLE (G)
OP-HH2-01	1-1/2"	1 #250 MCM TW GREEN INSULATED CABLE (G)
OP-LO-001-C	1"	2 #12 (C), 1 #12 (SPARE), 1 #10 (G)
OP-LSL-1700-C	1"	VENDOR SUPPLIED CABLE
OP-LSL-1700-C1	1"	2 #12 (C), 1 #10 (G)
OP-LP1-P1	2-1/2"	3 #2/0 (P), 1 #2/0 (N), 1 #2 (G)
OP-LS1-P1	2-1/2"	3 #2/0 (P), 1 #2/0 (N), 1 #2 (G)
OP-MCC-01L-C1	2-1/2"	58 #12 (C), 12 #12 (SPARE), 4 #10 (G)
OP-MCC-01L-C2	2-1/2"	54 #12 (C), 12 #12 (SPARE), 4 #10 (G)
OP-MCC-01L-C3	2-1/2"	EMPTY
OP-MCC-01L-C4	2-1/2"	EMPTY
OP-MCC-01L-COM	1"	1 #16 2-CONDUCTOR TWISTED PAIR SHIELDED CABLE (I)
OP-MCC-01L-G1	1-1/2"	1 #250 MCM THW GREEN INSULATED CABLE (G)
OP-MCC-01L-G2	1-1/2"	1 #250 MCM THW GREEN INSULATED CABLE (G)
OP-MCC-01R-C1	2-1/2"	41 #12 (C), 10 #12 (SPARE), 5 #10 (G)
OP-MCC-01R-C2	2-1/2"	38 #12 (C), 10 #12 (SPARE), 5 #10 (G)
OP-MCC-01R-C3	2-1/2"	EMPTY
OP-MCC-01R-C4	2-1/2"	EMPTY
OP-MCC-01R-COM	1"	1 #16 2-CONDUCTOR TWISTED PAIR SHIELDED CABLE (I)
OP-MCC-01R-G1	1-1/2"	1 #250 MCM THW GREEN INSULATED CABLE (G)
OP-MCC-01R-G2	1-1/2"	1 #250 MCM THW GREEN INSULATED CABLE (G)
OP-MCP-001-G1	1-1/2"	1 #250 MCM THW GREEN INSULATED CABLE (G)
OP-MCP-001-T1	3/4"	(4)
OP-MCP-TELE-C1	2"	(3)
OP-PAR-001-C2	1-1/4"	15 #12 (C), 5 #12 (SPARE), 1 #10 (G)
OP-PAR-001-C6	2"	29 #12 (C), 9 #12 (SPARE)
OP-PAR-001-I2-COM	1"	2 #16 2-CONDUCTOR TWISTED PAIR SHIELDED CABLE (I)
OP-PAR-001-IE1	1"	8 #10 (I), 1 #10 (G)
OP-PAR-001-P	4"	3 #2/0 (P), 1 #6 (G)
OP-PAR-001-SH	1"	2 #10 (SH), 1 #10 (G)
OP-PAR-002-C1	1-1/4"	15 #12 (C), 4 #12 (SPARE), 1 #10 (G)
OP-PAR-002-C2	2"	29 #12 (C), 9 #12 (SPARE)
OP-PAR-002-IE1	1"	8 #10 (I), 1 #10 (G)
OP-PAR-002-P	4"	3 #250 MCM (P), 1 #4 (G)
OP-PAR-002-SH	1"	2 #10 (SH), 1 #10 (G)
OP-PAR-003-C1	1-1/4"	15 #12 (C), 5 #12 (SPARE), 1 #10 (G)
OP-PAR-003-C2	2"	29 #12 (C), 9 #12 (SPARE)
OP-PAR-003-COM	1"	1 #16 2-CONDUCTOR TWISTED PAIR SHIELDED CABLE (I)
OP-PAR-003-IE1	1"	8 #10 (I), 1 #10 (G)
OP-PAR-003-P	4"	3 #250 MCM (P), 1 #4 (G)
OP-PAR-003-SH	1"	2 #10 (SH), 1 #10 (G)
OP-PDP1-P1	2-1/2"	3 #250 MCM (P), 1 #2 (G)
OP-PDP1-P2	2-1/2"	3 #250 MCM (P), 1 #2 (G)
OP-PS-1700-C	1"	2 #12 (C), 1 #12 (SPARE), 1 #10 (G)

CONDUIT/WIRE SCHEDULE

CONDUIT TAG	SIZE	CABLE/WIRE DESCRIPTION
OP-XGEN-C1	2-1/2"	15 #12 (C), 4 #12 (SPARE), 1 #8 (G)
OP-TS-EF2-C	1"	4 #12 (C), 1 #10 (G)
OP-TS-EF3-C	1"	4 #12 (C), 1 #10 (G)
OP-TS-EF4-C	1"	4 #12 (C), 1 #10 (G)
OP-TSTA-ACU1-C	1"	(2)
OP-TSTA-ACU2-C	1"	(2)
OP-TSTA-ACU3-C	1"	(2)
OP-TSTA-EF2-C	1"	2 #12 (C), 1 #12 (SPARE), 1 #10 (G)
OP-TSTA-EF3-C	1"	2 #12 (C), 1 #12 (SPARE), 1 #10 (G)
OP-TSTA-EF4-C	1"	2 #12 (C), 1 #12 (SPARE), 1 #10 (G)
OP-UH-001-P	1"	3 #10 (P), 1 #10 (G)
OP-VS-1300-C	(1)	(1)
OP-VS-1310-C	(1)	(1)
OP-VS-1320-C	(1)	(1)
OP-WH-001-P	1-1/4"	3 #4 (P), 1 #8 (G)
OP-WHM-MCC1L-C	1-1/4"	8 #10 (C), 1 #10 (G)
OP-WHM-MCC1R-C	1-1/4"	8 #10 (C), 1 #10 (G)
OP-XFMR-CPP1G	1"	1 #1/0 THW GREEN INSULATED CABLE (G)
OP-XFMR-CPP1-P	1-1/4"	3 #6 (P), 1 #6(G)
OP-XFMR-LP1-P	2"	3 #2/0 (P), 1 #6(G)
PT-BS-001-P	(1)	(1)
PT-ESF-001-DC	1-1/4"	7 #4 (C), 3 #10 (C), 10 #12 (C), 4 #12 (SPARE)
PT-ESTOP-BS1-C	(1)	(1)
PT-FE-300A-I	1"	VENDOR SUPPLIED CABLE
PT-FE-300B-I	1"	VENDOR SUPPLIED CABLE
PT-FE-301A-I	(1)	EMPTY
PT-FE-301B-I	(1)	EMPTY
PT-FT-300	1"	1 #16 2-CONDUCTOR TWISTED PAIR SHIELDED CABLE (I)
PT-SV-BS1-C	(1)	(1)
PT-SCP-001-C	1-1/4"	EMPTY
PT-SCP-001-PC	1-1/4"	EMPTY
PT-TE-300-C	1"	3 #12 (C), 1 #12 (SPARE), 1 #10 (G)
SLT-CS-SLP1-C	1"	6 #12 (C), 2 #12 (SPARE), 1 #10 (G)
SLT-CS-SLP2-C	1"	6 #12 (C), 2 #12 (SPARE), 1 #10 (G)
SLT-FE-1100A-I	1"	VENDOR SUPPLIED CABLE
SLT-FE-1100B-I	1"	VENDOR SUPPLIED CABLE
SLT-FE-1102A-I	1"	VENDOR SUPPLIED CABLE
SLT-FE-1102B-I	1"	VENDOR SUPPLIED CABLE
SLT-FIT-1100-I	1"	1 #16 2-CONDUCTOR TWISTED PAIR SHIELDED CABLE (I)
SLT-FIT-1100-P	1"	2 #10 (P), 1 #10 (G)
SLT-FIT-1101-I	1"	EMPTY
SLT-FIT-1101-P	1"	EMPTY
SLT-FIT-1102-I	1"	1 #16 2-CONDUCTOR TWISTED PAIR SHIELDED CABLE (I)
SLT-FIT-1102-P	1"	2 #10 (P), 1 #10 (G)
SLT-FIT-1	1"	1 #16 2-CONDUCTOR TWISTED PAIR SHIELDED CABLE (I)
SLT-FIT-P	1-1/4"	4 #10 (P), 3 #10 (C), 3 #10 (SPARE)
SLT-PW-001-PC	1-1/4"	3 #8 (P), 1 #10 (G), 12 #12 (C), 4 #12 (SPARE)
SLT-SLP-001-PCSH	1-1/4"	2 #6 (P), 2 #10 (SH), 1 #8 (G), 3 #12 (C), 2 #12 (SPARE), 1 #10 (G)
SLT-SLP-001-PSH	1"	3 #8 (P), 2 #10 (SH), 1 #8 (G)
SLT-SLP-002-PCSH	1-1/4"	3 #8 (P), 2 #10 (SH), 1 #8 (G), 5 #12 (C), 2 #12 (SPARE), 1 #10 (G)
SLT-SLP-002-PSH	1"	3 #8 (P), 2 #10 (SH), 1 #8 (G)
SLT-SLP-003-PCSH	1-1/4"	EMPTY
UV-CP-UV1-C	1-1/4"	15 #12 (C), 4 #12 (SPARE), 1 #10 (G)
UV-CP-UV1-COM	1"	1 #16 2-CONDUCTOR TWISTED PAIR SHIELDED CABLE (I)
UV-CP-UV1-I	1"	2 #16 2-CONDUCTOR TWISTED PAIR SHIELDED CABLE (I)
UV-CP-UV1-P	(X)	(X)
UV-UV-001-I	(X)	(X)
UV-UV-001-P	(X)	(X)

CONDUIT/WIRE SCHEDULE

CONDUIT TAG	SIZE	CABLE/WIRE DESCRIPTION
UV-UV-002-I	(X)	(X)
UV-UV-002-P	(X)	(X)
UV-UV-003-I	(X)	(X)
UV-UV-003-P	(X)	(X)
UV-UV-004-I	(X)	(X)
UV-UV-004-P	(X)	(X)
UV-UV-005-I	(X)	(X)
UV-UV-005-P	(X)	(X)
UV-UV-006-I	(X)	(X)
UV-UV-006-P	(X)	(X)
UV-XFMR-UV1-P	1-1/4"	3 #4 (P), 1 #8 (G)

KEY NOTES:

1. THE CONTRACTOR SHALL SIZE PROPOSED CONDUIT/WIRE PER THE SPECIFICATIONS. THE CONTRACTOR SHALL FURNISH AND INSTALL ALL NECESSARY CONDUIT/WIRE PER THE MANUFACTURER'S WIRING DIAGRAMS AND RECOMMENDATIONS AND MAKE ALL FINAL CONNECTIONS. CLOSELY AND CAREFULLY COORDINATE DEVICE CONDUIT/WIRE REQUIREMENTS AND CONNECTION REQUIREMENTS WITH THE MANUFACTURER'S WIRING DIAGRAMS AND THE SPECIFICATIONS AND MAKE ALL FINAL CONNECTIONS.
2. WIRE IS FURNISHED AND INSTALLED BY HVAC/MECHANICAL. CLOSELY AND CAREFULLY COORDINATE WITH HVAC/MECHANICAL AND MAKE ALL FINAL CONNECTIONS.
3. WIRE IS FURNISHED AND INSTALLED BY SOUTHWESTERN BELL FOR TELEPHONE SERVICE. CLOSELY AND CAREFULLY COORDINATE WITH SOUTHWESTERN BELL AND MAKE ALL FINAL CONNECTIONS.
4. WIRE IS FURNISHED AND INSTALLED BY OTHERS.

GENERAL NOTES:

1. CLOSELY AND CAREFULLY COORDINATE ALL REQUIREMENTS WITH THE APPLICABLE EQUIPMENT MANUFACTURER/HVAC/MECHANICAL, THE SPECIFICATIONS, AND MAKE ALL FINAL CONNECTIONS.
2. CLOSELY AND CAREFULLY COORDINATE VENDOR SUPPLIED CABLE REQUIREMENTS WITH THE EQUIPMENT MANUFACTURER AND MAKE ALL FINAL CONNECTIONS.

KEY NOTES

1. DISCONNECT AND REMOVE CABLE/WIRE IN ITS ENTIRETY.
2. CONDUIT SHALL BE PARTIALLY DEMOLISHED AND EXTENDED DURING RENOVATION ACTIVITIES. REFER TO PLANS FOR ADDITIONAL INFORMATION.
3. CONDUIT SHALL BE PARTIALLY DEMOLISHED, CAPPED, AND ABANDONED IN PLACE. REFER TO PLANS FOR ADDITIONAL INFORMATION.
4. EXISTING EMPTY CONDUIT TO BE REUSED DURING RENOVATION ACTIVITIES. REFER TO RENOVATION DRAWINGS FOR ADDITIONAL INFORMATION .

RECORD DRAWING

THIS CONSTRUCTION DOCUMENT WAS PREPARED USING INFORMATION SUPPLIED BY THE CONTRACTOR TO REPRESENT CONSTRUCTION CHANGES. THIS DOCUMENT IS FOR INFORMATION AND REFERENCE IN CONNECTION WITH THE OWNER'S USE AND OCCUPANCY OF THE PROJECT AND IS NOT INTENDED FOR BID, PERMIT OR CONSTRUCTION.

BY: K.A. Hartunian DATE: 1/5/2007

REUSE OF DOCUMENTS
This document and the ideas and designs incorporated herein as an instrument of professional service has been developed, designed and prepared by Harutunian Engineering, Inc. and is not to be used, in whole or part, for any other project without the written authorization of the City of Austin and Harutunian Engineering, Inc. © 2003

HARUTUNIAN ENGINEERING INCORPORATED
ENGINEERING AND ENVIRONMENTAL CONSULTANTS
305 EAST HUNTLAND DRIVE SUITE 500 AUSTIN, TEXAS 78752

NO.	DATE	REVISION	APPROVED
4			
3			
2			
1	1/5/7	RECORD DRAWING	K.A.H.

THE SEAL APPEARING ON THIS DOCUMENT WAS AUTHORIZED BY K. A. HARUTUNIAN, P.E. 59181 ON OCTOBER 18, 2003

WARNING
IF THIS BAR DOES NOT MEASURE 1" THEN DRAWING IS NOT TO SCALE

STATE OF TEXAS · K. A. HARUTUNIAN · 59181 · REGISTERED PROFESSIONAL ENGINEER

Dwg. No. RE-34

CITY OF AUSTIN, TEXAS
NORTHEAST INTERIM WASTEWATER TREATMENT PLANT

OPERATIONS BUILDING CONDUIT/WIRE SCHEDULES (SHEET 2 OF 2)

Turner Collie & Braden Inc.
ENGINEERS • PLANNERS • PROJECT MANAGERS

Unit PUBLIC WORKS	Scale NONE	Date OCTOBER 2003	
Designed HEI	Checked HEI	Job No. 052-122094-0008	
Drawn HEI	Approved HEI	Sheet 248/327	

THIS CONFORMED DOCUMENT IS RELEASED FOR THE CONVENIENCE OF THE CONTRACTOR UNDER THE AUTHORITY OF:

K. A. HARUTUNIAN, P.E. TX LIC NO. 59181 — 11-01-22 DATE

SEE DISCLAIMER FOR LIMITATIONS OF USE.

CONTRACT DOCUMENTS DATED FEBRUARY 28, 2022, AS PART OF THE BIDDING DOCUMENTS (DRAWINGS AND SPECIFICATIONS) AND SUBSEQUENTLY ISSUED ADDENDA HAVE BEEN MERGED INTO ONE CONFORMING SET OF DOCUMENTS FOR THE CONVENIENCE OF THE CONTRACTOR. IF INCONSISTENCIES OR AMBIGUITIES BETWEEN "CONFORMED" DOCUMENTS AND CONTRACT DOCUMENTS ARE FOUND, THE CONTRACT DOCUMENTS SHALL GOVERN.

This document, and the designs incorporated herein, is an instrument of professional service that has been developed, designed and prepared by Harutunian Engineering, Inc., and is not to be used, in whole or in part, for any other project without giving written notice to Harutunian Engineering, Inc.

REV	DATE	BY	DESCRIPTION
			CONFORMED DOCUMENTS

DESIGNED HEI · DRAWN HEI · CHECKED HEI · DATE NOVEMBER 2022

** ORIGINAL SEALED BY K.A. HARUTUNIAN 02-28-22 TX PE 59181 **

HARUTUNIAN ENGINEERING INCORPORATED
ENGINEERING AND ENVIRONMENTAL CONSULTANTS
8100 CROSS PARK DRIVE AUSTIN, TEXAS 78754
TBPE REGISTRATION NO. F-2408

carollo® TBPELS No. F-882

CITY OF AUSTIN FOUNDED 1839 CITY OF AUSTIN

CITY OF AUSTIN
WILD HORSE RANCH WWTP EXPANSION
DEMOLITION
CONDUIT/WIRE SCHEDULES DEMOLITION - 2

VERIFY SCALES
BAR IS ONE INCH ON ORIGINAL DRAWING
0 1"
IF NOT ONE INCH ON THIS SHEET, ADJUST SCALES ACCORDINGLY

JOB NO. 10976A.00
DRAWING NO. 00DE02
SHEET NO. 98 OF 464

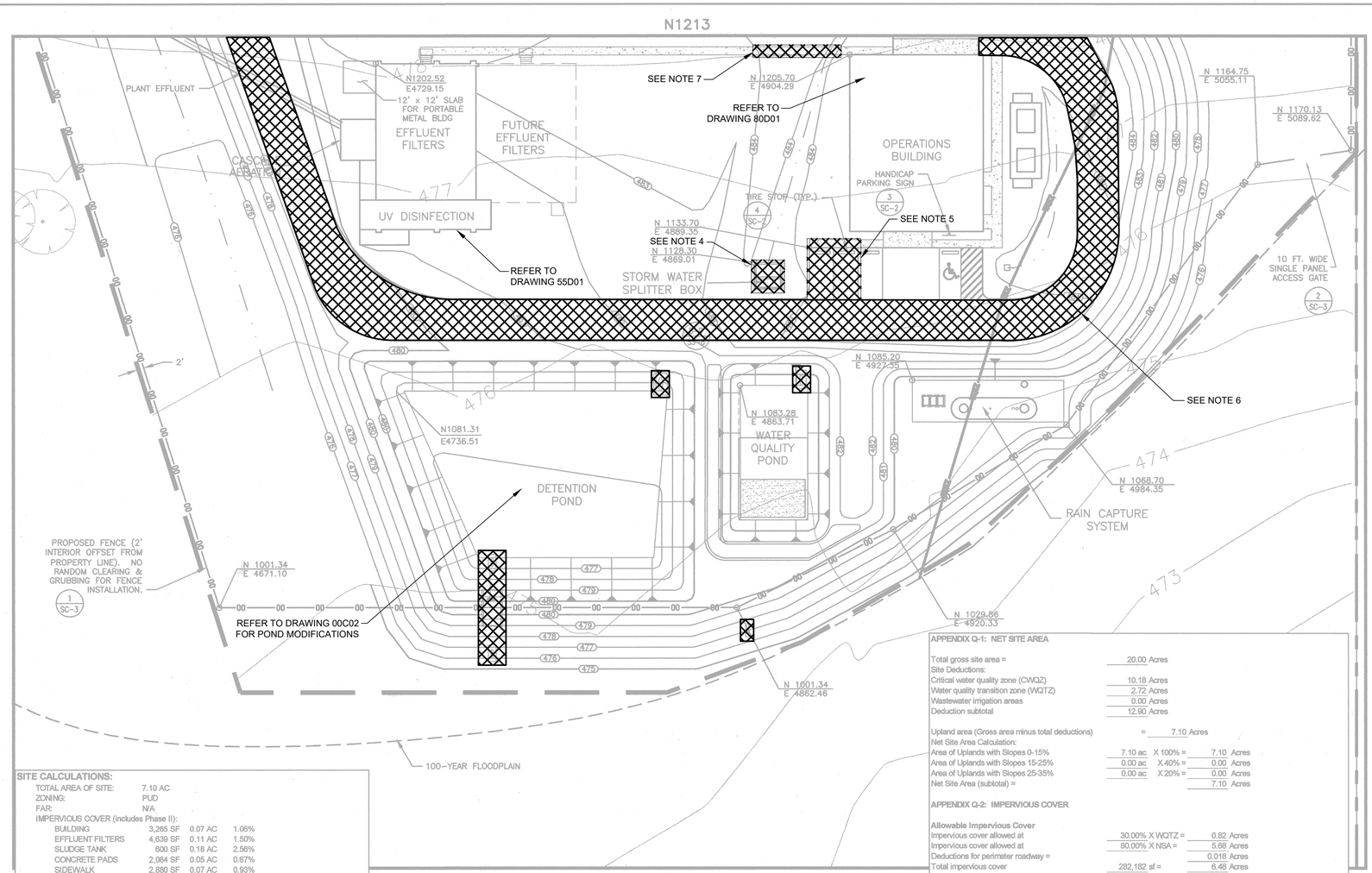

SITE CALCULATIONS:

TOTAL AREA OF SITE:	7.10 AC		
ZONING:	PUD		
FAR:	N/A		
IMPERVIOUS COVER (includes Phase II):			
BUILDING	3,265 SF	0.07 AC	1.06%
EFFLUENT FILTERS	4,639 SF	0.11 AC	1.50%
SLUDGE TANK	600 SF	0.18 AC	2.56%
CONCRETE PADS	2,064 SF	0.05 AC	0.67%
SIDEWALK	2,880 SF	0.07 AC	0.93%
PARKING/DRIVES	40,617 SF	0.93 AC	13.13%
ACTUAL I.C.	54,065 SF	1.41 AC	19.84%
ALLOWABLE I.C.	-- SF	-- AC	--%

BUILDING:

TOTAL AREA:	3,256 SF
HEIGHT	20 FT
STORIES	1 STORY
FFE	485
FOUNDATION	SLAB ON GRADE
USE	TREATMENT PLANT OPERATIONS BUILDING
AMENITITIES	NONE

PARKING:

REQUIRED SPACES	4	Based upon use by Water & Wastewater Utility
PROVIDED SPACES	4	
STANDARD SPACES	3	
COMPACT SPACES	0	
HANDICAP SPACES	1	
BICYCLE PARKING (TYPE C)		
REQUIRED	0	
PROVIDED	0	

NOTES:

1. OFF-SITE WATER AND WASTEWATER SERVICE IS NOT PROVIDED. DURING CONSTRUCTION, CONTRACTOR IS RESPONSIBLE FOR PROVIDING SANITARY FACILITIES, DRINKING WATER, AND WATER FOR TESTING IN ACCORDANCE WITH THE CONTRACT DOCUMENTS. FOLLOWING OCCUPATION OF THE FACILITY, WASTEWATER FROM THE SANITARY FACILITIES LOCATED IN THE OPERATIONS BUILDING WILL BE CONVEYED BY THE PLANT DRAIN PIPING TO THE INFLUENT LIFT STATION FOR TREATMENT. DRINKING WATER FOR OPERATIONS STAFF WILL BE DELIVERED IN 5-GALLON CONTAINERS. WATER FOR OTHER POTABLE USES SUCH AS SHOWERS, SINKS, AND TOILETS WILL BE SERVED FROM THE RAINWATER COLLECTION SYSTEM. 1
2. FOR CONSTRUCTION WITHIN THE RIGHT-OF-WAY, A CONCRETE PERMIT IS REQUIRED.
3. ALL ADJOINING LAND USES ARE VACANT. THE SURROUNDING PROPERTY IS CURRENTLY UNDEVELOPED.
4. THERE ARE NO EXISTING BUILDINGS ON ADJOINING LOTS.
5. THE SITE IS COMPOSED OF 3 LOTS/TRACTS. IT HAS BEEN APPROVED AS ONE COHESIVE DEVELOPMENT. IF PORTIONS OF THE LOTS/TRACTS ARE SOLD, APPLICATION FOR SUBDIVISION AND SITE PLAN APPROVAL MAY BE REQUIRED.
6. PHASE I AND PHASE II CONSTRUCTION FOR THE NORTHEAST INTERIM WASTEWATER TREATMENT PLANT HAVE BEEN REVIEWED BY THE CITY OF AUSTIN'S WATERSHED PROTECTION AND DEVELOPMENT REVIEW DEPARTMENT AS CASE NUMBER SP-03-0358C. IF PHASE II CONSTRUCTION OCCURS WITHIN THREE YEARS OF PHASE I, ADDITIONAL REVIEW IS NOT REQUIRED. AN EXTENSION MAY BE REQUESTED BY ADMINISTRATIVE VARIANCE OR CITY COUNCIL ACTION FOR TIME PERIODS BEYOND THREE YEARS. 1

APPENDIX Q-1: NET SITE AREA

Total gross site area =	20.00	Acres
Site Deductions:		
Critical water quality zone (CWQZ)	10.18	Acres
Water quality transition zone (WQTZ)	2.72	Acres
Wastewater irrigation areas	0.00	Acres
Deduction subtotal	12.90	Acres
Upland area (Gross area minus total deductions) =	7.10	Acres
Net Site Area Calculation:		
Area of Uplands with Slopes 0-15%	7.10 ac X 100% =	7.10 Acres
Area of Uplands with Slopes 15-25%	0.00 ac X 40% =	0.00 Acres
Area of Uplands with Slopes 25-35%	0.00 ac X 20% =	0.00 Acres
Net Site Area (subtotal) =		7.10 Acres

APPENDIX Q-2: IMPERVIOUS COVER

Allowable Impervious Cover		
Impervious cover allowed at	30.00% X WQTZ =	0.82 Acres
Impervious cover allowed at	80.00% X NSA =	5.68 Acres
Deductions for perimeter roadway =		0.018 Acres
Total impervious cover	282,182 sf =	6.48 Acres
Allowable Impervious Cover Breakdown by Slope Category		
Total acreage <15% =	7.10 ac X 80% =	5.68 Acres
Total acreage 15-25% =	0.00 ac X 10% =	0.00 Acres
Total acreage 25-35% =	0.00 ac X 0% =	0.00 Acres
Proposed Total Impervious Cover		
Impervious cover in WQTZ =	0.04 ac =	1.47%
Impervious cover in Uplands Zone =	0.15 ac =	2.11%
Total proposed impervious cover =	0.19 ac =	2.68%

Proposed Impervious Cover on Slopes

		IMPERVIOUS COVER					
		Building/ And Other Impervious Cover		Driveways Roadways			
Slope Categories	Acres	Ac.	% of Category	Ac	% of Category	Total Ac.	% of Category
0-15%	7.10	0.48	6.71%	0.93	13.13%	1.41	19.84%
15-25%	0.00	0.00	0.00%	0.00	0.00%	0.00	0.00%
25-35%	0.00	0.00	0.00%	0.00	0.00%	0.00	0.00%
Over 35%	0.00	0.00	0.00%	0.00	0.00%	0.00	0.00%
Total Site Area	7.10	0.48	6.71%	0.93	13.13%	1.41	19.84%

LEGEND

- EASEMENT LIMITS
- PROJECT SHEET GRID
- CONSTRUCTION LIMITS
- PHASE I
- PHASE II (NOT IN THIS CONTRACT)
- 100 YR FLOOD PLAIN
- PROPOSED CHAINLINK FENCE
- WQTZ WATER QUALITY TRANSITION ZONE
- CWQZ CRITICAL WATER QUALITY ZONE

PLANT GRID NORTH
STATE PLANE GRID NORTH

RECORD DRAWING

THIS CONSTRUCTION DOCUMENT WAS PREPARED USING INFORMATION SUPPLIED BY THE CONTRACTOR TO REPRESENT CONSTRUCTION CHANGES. THIS DOCUMENT IS FOR INFORMATION AND REFERENCE IN CONNECTION WITH THE OWNER'S USE AND OCCUPANCY OF THE PROJECT AND IS NOT INTENDED FOR BID, PERMIT OR CONSTRUCTION.

BY: SRB DATE: FEBRUARY 15, 2007

THE SEAL APPEARING ON THIS DOCUMENT WAS AUTHORIZED BY BLAYNE E. STANSBERRY, P.E. 88646 ON NOVEMBER 24, 2003

WARNING 0 1/2 1 IF THIS BAR DOES NOT MEASURE 1" THEN DRAWING IS NOT TO SCALE

STATE OF TEXAS BLAYNE E. STANSBERRY 88646 REGISTERED PROFESSIONAL ENGINEER

Dwg. No. BC-1

NOTES:

1. THIS IS A RECORD DRAWING FROM A PREVIOUS CONTRACT. ACTUAL FIELD CONDITIONS MAY BE DIFFERENT FROM THOSE SHOWN ON THIS DRAWING. CONTRACTOR TO FIELD VERIFY INSTALLED CONDITIONS IMPACTED BY OR IMPACTING THIS WORK PRIOR TO INITIATING THE WORK. CONTRACTOR SHALL REFER TO CONSTRUCTION DOCUMENTS FOR RESPONSIBILITIES RELATIVE TO VERIFICATION OF EXISTING FACILITIES AND COORDINATION WITH PLANT OPERATION.
2. COORDINATES SHOWN ON THIS RECORD DRAWING MAY NOT MATCH THE PLANT GRID ESTABLISHED FOR THIS PROJECT. CONTRACTOR TO FIELD VERIFY INSTALLED CONDITIONS IMPACTED BY OR IMPACTING THIS WORK PRIOR TO INITIATING THE WORK.
3. CONTRACTOR SHALL REFER TO SPECIFICATION 01140 - WORK RESTRICTIONS FOR SHUTDOWN REQUIREMENTS AND SEQUENCING OF DEMOLITION IN ORDER TO ALLOW THE PLANT TO REMAIN IN SERVICE DURING CONSTRUCTION.
4. CONTRACTOR SHALL EXCAVATE AND REMOVE EXISTING STORM WATER SPLITTER BOX IN ITS ENTIRETY.
5. CONTRACTOR SHALL EXCAVATE AND REMOVE TWO (2) EXISTING PARKING SPOTS. PAVING SHALL BE EXTENDED AND TIED INTO ADMINISTRATION BUILDING ROLLUP DOOR ENTRANCE.
6. CONTRACTOR SHALL EXCAVATE AND REMOVE EXISTING ROAD PAVEMENT AND REPLACE AFTER ALL CONSTRUCTION IS COMPLETE.
7. CONTRACTOR SHALL EXCAVATE AND REMOVE EXISTING SIDEWALK. REFER TO PAVING SHEET TO TIE SIDEWALK INTO PROPOSED PARKING AREA.

LEGEND

DEMOLITION

THIS CONFORMED DOCUMENT IS RELEASED FOR THE CONVENIENCE OF THE CONTRACTOR UNDER THE AUTHORITY OF:

CASEY G. WAUTERS, P.E. 11-01-22
TX LIC NO. 93889 DATE

SEE DISCLAIMER FOR LIMITATIONS OF USE.

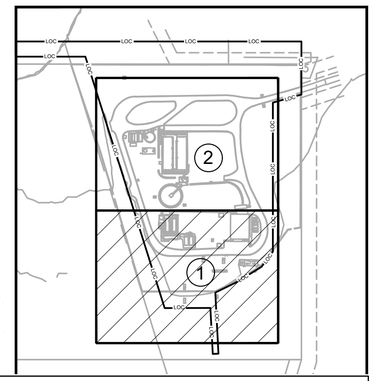

CONTRACT DOCUMENTS DATED JUNE 10, 2022, AS PART OF THE BIDDING DOCUMENTS (DRAWINGS AND SPECIFICATIONS) AND SUBSEQUENTLY ISSUED ADDENDA HAVE BEEN MERGED INTO ONE CONFORMING SET OF DOCUMENTS FOR THE CONVENIENCE OF THE CONTRACTOR. IF INCONSISTENCIES OR AMBIGUITIES BETWEEN "CONFORMED" DOCUMENTS AND CONTRACT DOCUMENTS ARE FOUND, THE CONTRACT DOCUMENTS SHALL GOVERN.

RAYMOND CHAN & ASSOCIATES, INC.
CONSULTING CIVIL ENGINEERS
4319 JAMES CASEY STREET, SUITE 300
AUSTIN, TEXAS 78745
PH. (512) 480-8156 FAX (512) 480-8811

NO.	DATE	REVISION	APPROV.
4			
3			
2			
1	11/03	ADDENDUM NO. 2	BK

CITY OF AUSTIN, TEXAS
NORTHEAST INTERIM WASTEWATER TREATMENT PLANT
10621 BLUE BLUFF ROAD

PROPOSED SITE IMPROVEMENTS

Turner Collie & Braden Inc.
ENGINEERS • PLANNERS • PROJECT MANAGERS

Unit PUBLIC WORKS	Scale 1"=20'	Date DECEMBER 2003	
Designed	Checked	Job No. 052-122094-0003	
Drawn	Approved	Sheet 31/327	

REV	DATE	BY	DESCRIPTION

CONFORMED DOCUMENTS

DESIGNED CW
DRAWN AW
CHECKED SGE
DATE FEBRUARY 2022

** ORIGINAL SEALED BY CASEY G. WAUTERS, P.E. 2/28/2022 TX PE 93889 **

AECOM TECHNICAL SERVICES INC.
13640 BRIARWICK DRIVE, SUITE 200
AUSTIN, TEXAS 78729
WWW.AECOM.COM
TBPE REG. NO. F-3580

carollo
TBPE No. F-882

CITY OF AUSTIN
FOUNDED 1839
CITY OF AUSTIN

CITY OF AUSTIN
WILD HORSE RANCH WWTP EXPANSION
DEMOLITION
SITE DEMOLITION PLAN (SHEET 1 OF 4)

VERIFY SCALES
BAR IS ONE INCH ON ORIGINAL DRAWING
0 1"
IF NOT ONE INCH ON THIS SHEET, ADJUST SCALES ACCORDINGLY

JOB NO. 10976A.10
DRAWING NO. 01D01
SHEET NO. 99 OF 464

LAST SAVED BY: dseivert
E:\122094-Northeast\0008-Wildhorse Plant Design\RECORD-DWGS\VOLUME 1 OF 3\18C-1.dwg ; March 19, 2007 ; 2:14pm
PROJECT NO. 9585A10 FILE NAME: 9585A10_SheetSeed.dgn

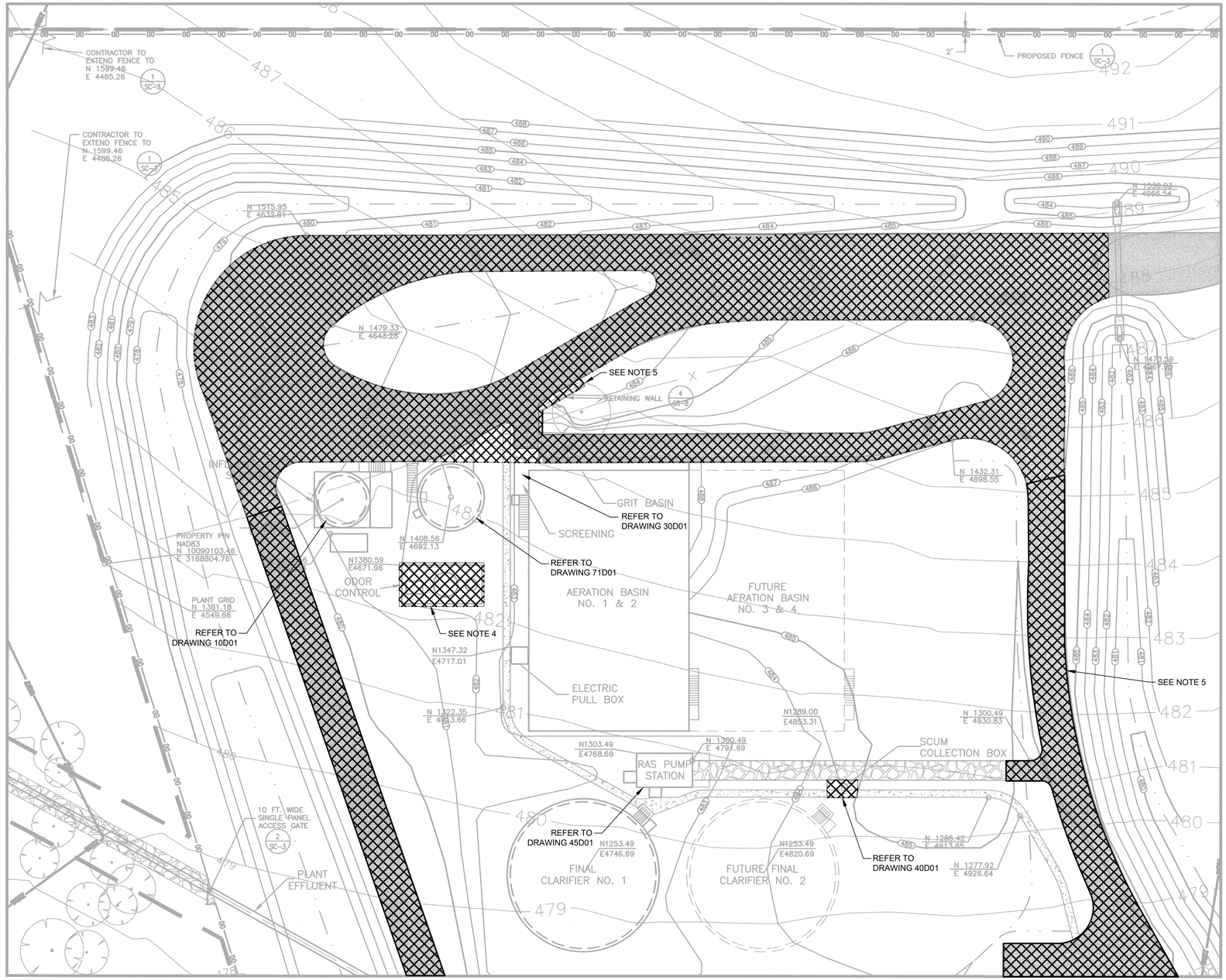

LEGEND

- EASEMENT LIMITS
- PROJECT SHEET GRID
- CONSTRUCTION LIMITS
- PHASE I
- PHASE II (NOT IN THIS CONTRACT)
- 100 YR FLOOD PLAIN
- PROPOSED CHAINLINK FENCE
- WATER QUALITY TRANSITION ZONE
- CRITICAL WATER QUALITY ZONE

PLANT GRID NORTH

STATE PLANE GRID NORTH

RECORD DRAWING

THIS CONSTRUCTION DOCUMENT WAS PREPARED USING INFORMATION SUPPLIED BY THE CONTRACTOR TO REPRESENT CONSTRUCTION CHANGES. THIS DOCUMENT IS FOR INFORMATION AND REFERENCE IN CONNECTION WITH THE OWNER'S USE AND OCCUPANCY OF THE PROJECT AND IS NOT INTENDED FOR BID, PERMIT OR CONSTRUCTION.

BY: Shay Rabb Roden DATE: 2/15/2007

WARNING
0 1/2 1
IF THIS BAR DOES NOT MEASURE 1" THEN DRAWING IS NOT TO SCALE

STATE OF TEXAS
BLAYNE E. STANSBERRY
88646
LICENSED PROFESSIONAL ENGINEER

Dwg. No. BC-2

NOTES:

1. THIS IS A RECORD DRAWING FROM A PREVIOUS CONTRACT. ACTUAL FIELD CONDITIONS MAY BE DIFFERENT FROM THOSE SHOWN ON THIS DRAWING. CONTRACTOR TO FIELD VERIFY INSTALLED CONDITIONS IMPACTED BY OR IMPACTING THIS WORK PRIOR TO INITIATING THE WORK. CONTRACTOR SHALL REFER TO CONSTRUCTION DOCUMENTS FOR RESPONSIBILITIES RELATIVE TO VERIFICATION OF EXISTING FACILITIES AND COORDINATION WITH PLANT OPERATION.
2. COORDINATES SHOWN ON THIS RECORD DRAWING MAY NOT MATCH THE PLANT GRID ESTABLISHED FOR THIS PROJECT. CONTRACTOR TO FIELD VERIFY INSTALLED CONDITIONS IMPACTED BY OR IMPACTING THIS WORK PRIOR TO INITIATING THE WORK.
3. CONTRACTOR SHALL REFER TO SPECIFICATION 01140 - WORK RESTRICTIONS FOR SHUTDOWN REQUIREMENTS AND SEQUENCING OF DEMOLITION IN ORDER TO ALLOW THE PLANT TO REMAIN IN SERVICE DURING CONSTRUCTION.
4. CONTRACTOR SHALL EXCAVATE AND REMOVE EXISTING ODOR CONTROL SLAB IN ITS ENTIRETY. CONTRACTOR SHALL COORDINATE WITH OWNER TO SCHEDULE REMOVAL AND RELOCATION OF EXISTING PLASTIC TANK AND ASSOCIATED APPURTENANCES. REFER TO DRAWING 01D05 FOR DETAILS.
5. CONTRACTOR SHALL REMOVE EXISTING RETAINING WALL IN ITS ENTIRETY.
6. CONTRACTOR SHALL EXCAVATE AND REMOVE EXISTING ROAD PAVEMENT AND REPLACE AFTER ALL CONSTRUCTION IS COMPLETE.

LEGEND

DEMOLITION

THIS CONFORMED DOCUMENT IS RELEASED FOR THE CONVENIENCE OF THE CONTRACTOR UNDER THE AUTHORITY OF:

Casey Wauters 11-01-22

CASEY G. WAUTERS, P.E. DATE
TX LIC NO. 93889

SEE DISCLAIMER FOR LIMITATIONS OF USE.

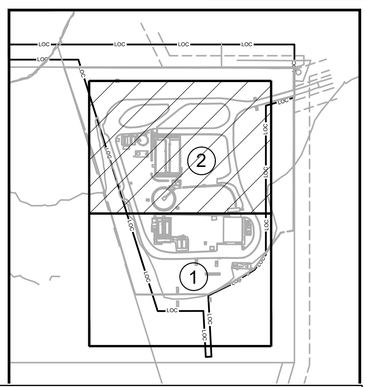

CONTRACT DOCUMENTS DATED JUNE 10, 2022, AS PART OF THE BIDDING DOCUMENTS (DRAWINGS AND SPECIFICATIONS) AND SUBSEQUENTLY ISSUED ADDENDA HAVE BEEN MERGED INTO ONE CONFORMING SET OF DOCUMENTS FOR THE CONVENIENCE OF THE CONTRACTOR. IF INCONSISTENCIES OR AMBIGUITIES BETWEEN "CONFORMED" DOCUMENTS AND CONTRACT DOCUMENTS ARE FOUND, THE CONTRACT DOCUMENTS SHALL GOVERN.

RAYMOND CHAN & ASSOCIATES, INC.
CONSULTING CIVIL ENGINEERS
4319 JAMES CASEY STREET, SUITE 300
AUSTIN, TEXAS 78745
PH. (512) 480-8156 FAX (512) 480-8811

NO.	DATE	REVISION	APPROV.
4			
3			
2			
1			

CITY OF AUSTIN, TEXAS
NORTHEAST INTERIM WASTEWATER TREATMENT PLANT
10621 BLUE BLUFF ROAD

PROPOSED SITE IMPROVEMENTS

Turner Collie & Braden Inc.
ENGINEERS • PLANNERS • PROJECT MANAGERS

Unit PUBLIC WORKS	Scale 1"=20'	Date NOVEMBER 2003	
Designed	Checked	Job No. 052-122094-0003	
Drawn PW	Approved	Sheet 32/327	

REV	DATE	BY	DESCRIPTION
			CONFORMED DOCUMENTS

DESIGNED CW
DRAWN AW
CHECKED SGE
DATE FEBRUARY 2022

** ORIGINAL SEALED BY CASEY G. WAUTERS, P.E. 2/28/2022 TX PE 93889 **

AECOM TECHNICAL SERVICES INC.
13640 BRIARWICK DRIVE, SUITE 200
AUSTIN, TEXAS 78729
WWW.AECOM.COM
TBPE REG. NO. F-3580

carollo
TBPE No. F-882

CITY OF AUSTIN
FOUNDED 1839

CITY OF AUSTIN
WILD HORSE RANCH WWTP EXPANSION
DEMOLITION
SITE DEMOLITION PLAN
(SHEET 2 OF 4)

VERIFY SCALES
BAR IS ONE INCH ON ORIGINAL DRAWING
0 1"
IF NOT ONE INCH ON THIS SHEET, ADJUST SCALES ACCORDINGLY

JOB NO. 10976A.10
DRAWING NO. 01D02
SHEET NO. 100 OF 464

LAST SAVED BY: dselvert

PROJECT NO. 9585A10 FILE NAME: 9585A10_SheetSeed.dgn

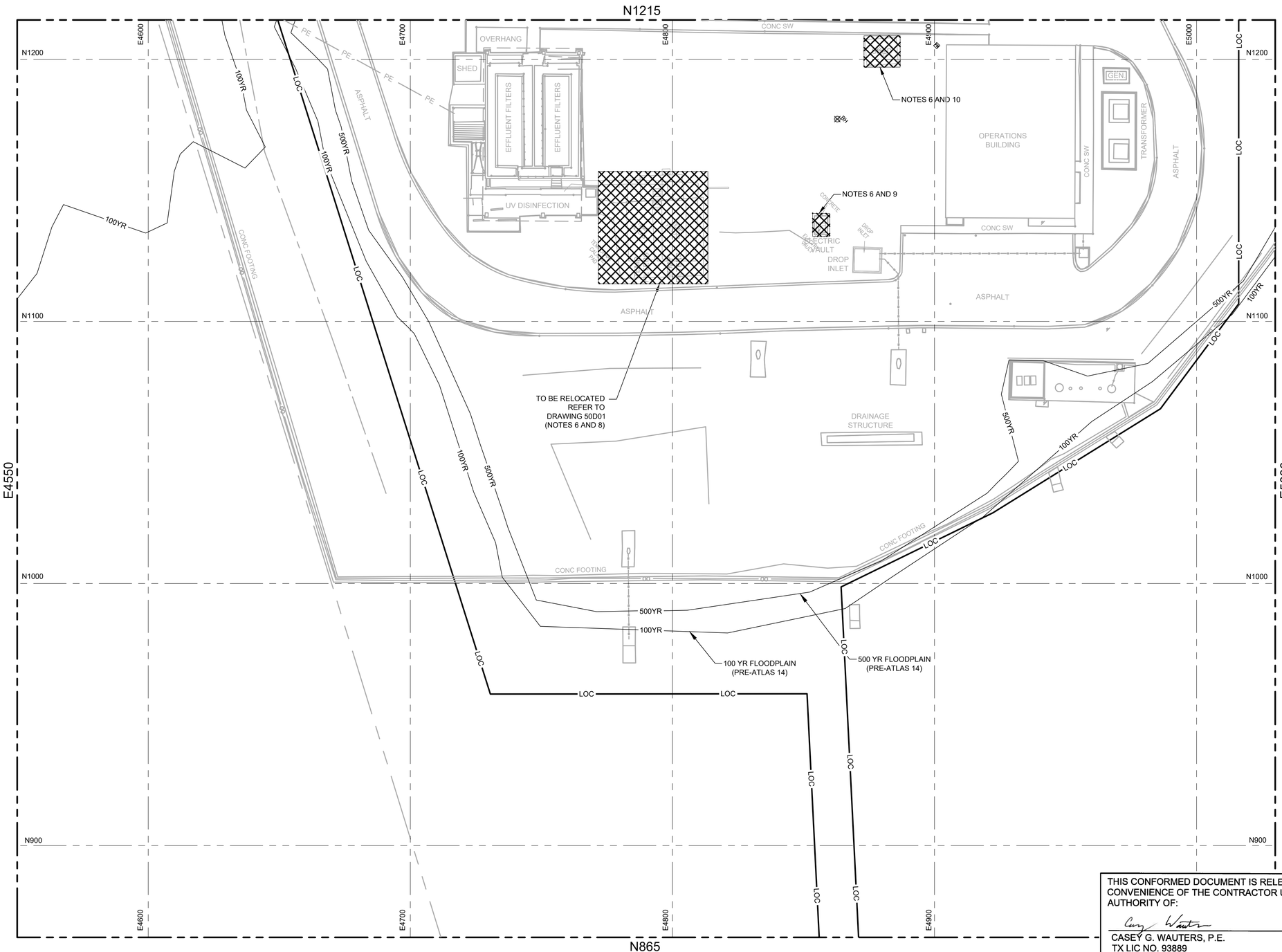

45°00'05"
NORTH
NORTH
TRUE
PLANT

SCALE: 1" = 20'

LEGEND

- EXISTING
- PROPOSED
- 100YR — 100 YEAR FLOODPLAIN
- 500YR — 500 YEAR FLOODPLAIN
- LOC — LIMITS OF CONSTRUCTION
- DEMOLITION

NOTES:

1. REFERENCE DRAWING 00G06 FOR OVERALL WWTP SITE PLAN.
2. ACTUAL FIELD CONDITIONS MAY BE DIFFERENT FROM THOSE SHOWN IN THIS DRAWING. CONTRACTOR TO FIELD VERIFY INSTALLED CONDITIONS IMPACTING OR IMPACTED BY THIS WORK PRIOR TO INITIATING WORK.
3. ALL ACCESS WAYS AND DRIVEWAYS TO BE KEPT CLEAR TO ALLOW OPERATORS ACCESS TO ALL AREAS FOR MAINTENANCE AND EMERGENCIES. CONTRACTOR TO COORDINATE THE DELIVERY AND LOADING / UNLOADING OF EQUIPMENT WITH OWNER AT A MINIMUM OF 48 HOURS PRIOR TO DELIVERY.
4. CONTRACTOR TO NOT OBSTRUCT DELIVERIES ON THE PLANT ACCESS ROAD. WORK WITHIN THE ACCESS ROAD MUST BE DONE IN A WAY THAT CAN BE COVERED TO PROVIDE DELIVERY ACCESS. ACCESS ROAD CLOSURES MUST BE AGREED UPON WITH THE CITY OF AUSTIN IN ADVANCE.
5. CONTRACTOR SHALL NOT BLOCK DRAINAGE SWALES, DITCHES, CULVERTS, OR ANY OTHER STORM WATER DRAINAGE WAY AT ANY TIME DURING EXECUTION OF THE PROJECT. DAMAGE RESULTING FROM FLOODING DUE TO BLOCKED DRAINAGE WAYS WILL BE THE RESPONSIBILITY OF THE CONTRACTOR AT NO ADDITIONAL PAY.
6. ITEMS SHOWN ON THIS DRAWING REPRESENT STRUCTURES TO BE RELOCATED OR DEMOLISHED THAT WERE IDENTIFIED BY THE SURVEYOR BUT WERE NOT PART OF THE ORIGINAL CONSTRUCTION CONTRACT. CONTRACTOR TO FIELD VERIFY INSTALLED CONDITIONS IMPACTING OR IMPACTED BY THIS WORK PRIOR TO INITIATING WORK.
7. CONTRACTOR SHALL REFER TO SPECIFICATION 01140 - WORK RESTRICTIONS FOR SHUTDOWN REQUIREMENTS AND SEQUENCING OF DEMOLITION IN ORDER TO ALLOW THE PLANT TO REMAIN IN SERVICE DURING CONSTRUCTION.
8. CONTRACTOR SHALL RELOCATE EXISTING TEMPORARY FILTERS AS IDENTIFIED IN THE SPECIFICATION 01140 - WORK RESTRICTIONS.
9. CONTRACTOR SHALL EXCAVATE AND REMOVE EXISTING ELECTRICAL VAULT IN ITS ENTIRETY AS IDENTIFIED IN THE SPECIFICATION 01140 - WORK RESTRICTIONS.
10. CONTRACTOR SHALL COORDINATE WITH OWNER FOR REMOVAL AND RELOCATION OF EXISTING SHED.

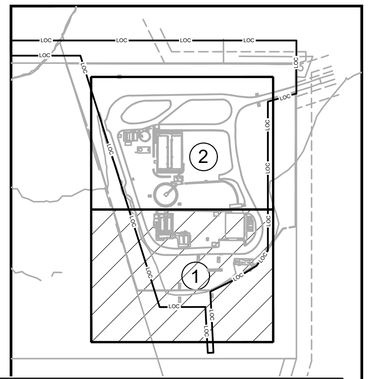

THIS CONFORMED DOCUMENT IS RELEASED FOR THE CONVENIENCE OF THE CONTRACTOR UNDER THE AUTHORITY OF:

CASEY G. WAUTERS, P.E.
TX LIC NO. 93889

11-01-22
DATE

SEE DISCLAIMER FOR LIMITATIONS OF USE.

CONTRACT DOCUMENTS DATED JUNE 10, 2022, AS PART OF THE BIDDING DOCUMENTS (DRAWINGS AND SPECIFICATIONS) AND SUBSEQUENTLY ISSUED ADDENDA HAVE BEEN MERGED INTO ONE CONFORMING SET OF DOCUMENTS FOR THE CONVENIENCE OF THE CONTRACTOR. IF INCONSISTENCIES OR AMBIGUITIES BETWEEN "CONFORMED" DOCUMENTS AND CONTRACT DOCUMENTS ARE FOUND, THE CONTRACT DOCUMENTS SHALL GOVERN.

REV	DATE	BY	DESCRIPTION
			CONFORMED DOCUMENTS

DESIGNED CW
DRAWN AW
CHECKED SGE
DATE FEBRUARY 2022

**
ORIGINAL
SEALED BY
CASEY G. WAUTERS, P.E.
2/28/2022
TX PE 93889
**

AECOM TECHNICAL SERVICES INC.
13640 BRIARWICK DRIVE, SUITE 200
AUSTIN, TEXAS 78729
WWW.AECOM.COM
TBPE REG. NO. F-3580

carollo
TBPE No. F-882

CITY OF AUSTIN
FOUNDED 1839

CITY OF AUSTIN

CITY OF AUSTIN
WILD HORSE RANCH WWTP EXPANSION
DEMOLITION
SITE DEMOLITION PLAN
SHEET (3 OF 4)

VERIFY SCALES
BAR IS ONE INCH ON ORIGINAL DRAWING
0 — 1"
IF NOT ONE INCH ON THIS SHEET, ADJUST SCALES ACCORDINGLY

JOB NO. 10976A.10
DRAWING NO. 01D03
SHEET NO. 101 OF 464

LAST SAVED BY:

PROJECT NO. 9585A10 FILE NAME: 9585A10_SheetSeed.dgn

N1565

N1215

E4550

E5030

E4600 E4700 E4800 E4900 E5000

N1500 N1400 N1300

ASPHALT

RIBBON CURB

NOTES 6 AND 8

WASTEWATER MANHOLE TOP ZONE=443.36 UNABLE TO INVERT

INFLUENT LIFT STATION

SLUDGE HOLDING TANK

CONC.

ODOR CONTROL

TANK

CONCRETE

ELECTRIC PANEL

CONC SW

CONC SIDEWALK

AERATION BASIN

ELECT PANEL

RAS PUMP STATION

FINAL CLARIFIER No. 1

ELECT VAULT

CURB & GUTTER

GEN. TRAILER

500YR

100YR

LOC

PE

500 YR FLOODPLAIN (PRE-ATLAS 14)

100 YR FLOODPLAIN (PRE-ATLAS 14)

CONC FOOTING

45°00'05"

NORTH

TRUE

PLANT

SCALE: 1" = 20'

LEGEND

- EXISTING
- PROPOSED
- 100YR — 100 YEAR FLOODPLAIN
- 500YR — 500 YEAR FLOODPLAIN
- LOC — LIMITS OF CONSTRUCTION
- DEMOLITION

NOTES:

1. REFERENCE DRAWING 00G06 FOR OVERALL WWTP SITE PLAN.
2. ACTUAL FIELD CONDITIONS MAY BE DIFFERENT FROM THOSE SHOWN IN THIS DRAWING. CONTRACTOR TO FIELD VERIFY INSTALLED CONDITIONS IMPACTING OR IMPACTED BY THIS WORK PRIOR TO INITIATING WORK.
3. ALL ACCESS WAYS AND DRIVEWAYS TO BE KEPT CLEAR TO ALLOW OPERATORS ACCESS TO ALL AREAS FOR MAINTENANCE AND EMERGENCIES. CONTRACTOR TO COORDINATE THE DELIVERY AND LOADING / UNLOADING OF EQUIPMENT WITH OWNER AT A MINIMUM OF 48 HOURS PRIOR TO DELIVERY.
4. CONTRACTOR TO NOT OBSTRUCT DELIVERIES ON THE PLANT ACCESS ROAD. WORK WITHIN THE ACCESS ROAD MUST BE DONE IN A WAY THAT CAN BE COVERED TO PROVIDE DELIVERY ACCESS. ACCESS ROAD CLOSURES MUST BE AGREED UPON WITH THE CITY OF AUSTIN IN ADVANCE.
5. CONTRACTOR SHALL NOT BLOCK DRAINAGE SWALES, DITCHES, CULVERTS, OR ANY OTHER STORM WATER DRAINAGE WAY AT ANY TIME DURING EXECUTION OF THE PROJECT. DAMAGE RESULTING FROM FLOODING DUE TO BLOCKED DRAINAGE WAYS WILL BE THE RESPONSIBILITY OF THE CONTRACTOR AT NO ADDITIONAL PAY.
6. ITEMS SHOWN ON THIS DRAWING REPRESENT STRUCTURES TO BE RELOCATED OR DEMOLISHED THAT WERE IDENTIFIED BY THE SURVEYOR BUT WERE NOT PART OF THE ORIGINAL CONSTRUCTION CONTRACT. CONTRACTOR TO FIELD VERIFY INSTALLED CONDITIONS IMPACTING OR IMPACTED BY THIS WORK PRIOR TO INITIATING WORK.
7. CONTRACTOR SHALL REFER TO SPECIFICATION 01140 - WORK RESTRICTIONS FOR SHUTDOWN REQUIREMENTS AND SEQUENCING OF DEMOLITION IN ORDER TO ALLOW THE PLANT TO REMAIN IN SERVICE DURING CONSTRUCTION.
8. CONTRACTOR SHALL EXCAVATE AND REMOVE EXISTING CULVERTS IN ITS ENTIRETY. CONTRACTOR SHALL REMOVE PRIOR TO REPLACEMENT OF ROAD SURFACE.

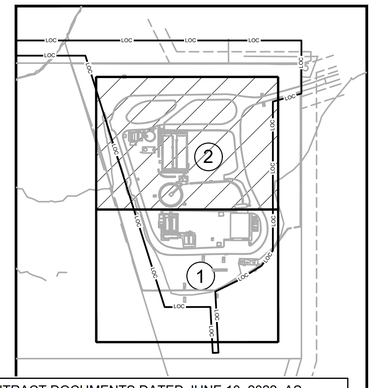

THIS CONFORMED DOCUMENT IS RELEASED FOR THE CONVENIENCE OF THE CONTRACTOR UNDER THE AUTHORITY OF:

CASEY G. WAUTERS, P.E.
TX LIC NO. 93889

11-01-22
DATE

SEE DISCLAIMER FOR LIMITATIONS OF USE.

CONTRACT DOCUMENTS DATED JUNE 10, 2022, AS PART OF THE BIDDING DOCUMENTS (DRAWINGS AND SPECIFICATIONS) AND SUBSEQUENTLY ISSUED ADDENDA HAVE BEEN MERGED INTO ONE CONFORMING SET OF DOCUMENTS FOR THE CONVENIENCE OF THE CONTRACTOR. IF INCONSISTENCIES OR AMBIGUITIES BETWEEN "CONFORMED" DOCUMENTS AND CONTRACT DOCUMENTS ARE FOUND, THE CONTRACT DOCUMENTS SHALL GOVERN.

REV	DATE	BY	DESCRIPTION
			CONFORMED DOCUMENTS

DESIGNED CW
DRAWN AW
CHECKED SGE
DATE FEBRUARY 2022

**
ORIGINAL SEALED BY CASEY G. WAUTERS, P.E. 2/28/2022 TX PE 93889
**

AECOM TECHNICAL SERVICES INC.
13640 BRIARWICK DRIVE, SUITE 200
AUSTIN, TEXAS 78729
WWW.AECOM.COM
TBPE REG. NO. F-3580

TBPE No. F-882

CITY OF AUSTIN

CITY OF AUSTIN
WILD HORSE RANCH WWTP EXPANSION
DEMOLITION
SITE DEMOLITION PLAN
SHEET (4 OF 4)

VERIFY SCALES
BAR IS ONE INCH ON ORIGINAL DRAWING
0 1"
IF NOT ONE INCH ON THIS SHEET, ADJUST SCALES ACCORDINGLY

JOB NO. 10976A.10
DRAWING NO. 01D04
SHEET NO. 102 OF 464

LAST SAVED BY:

PROJECT NO. 9585A10 FILE NAME: 9585A10_SheetSeed.dgn

Plot Date: 10-OCT-2022 10:27:01 AM
User: LDietzel
PlotScale: 1:1
DesignScript: Carollo_Std_Pen_v0905.pen
ColorTable: gshade.ctb
Model: Layout1
LAST SAVED BY: ldietzel

RELOCATE TANK, APPURTENANCES, PUMP AND ELECTRICAL PANELS TO TEMPORARY ALKALINITY PAD

REFER TO ELECTRICAL DRAWINGS FOR RELOCATION OF ELECTRICAL PANELS

GENERAL NOTES:

1. CONTRACTOR SHALL FIELD VERIFY EXISTING CONDITIONS PRIOR TO STARTING WORK. CONTRACTOR SHALL PROTECT EQUIPMENT PRIOR TO RE-INSTALLATION.
2. ROUTING OF MAGNESIUM HYDROXIDE FEED PIPING WILL BE DETERMINED DURING CONSTRUCTION.
3. COORDINATE SHUTDOWN AND RELOCATION WITH PLANT STAFF, TO MINIMIZE TIME ALKALINITY SYSTEM IS OFFLINE. REFER TO SPECIFICATION 01140 - WORK RESTRICTIONS.

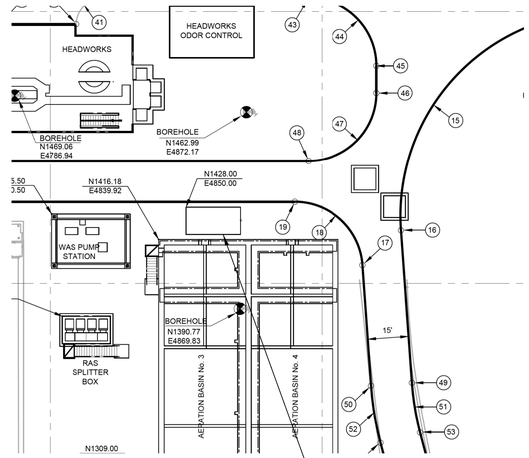

TEMPORARY ALKALINITY ADDITION PAD

THIS CONFORMED DOCUMENT IS RELEASED FOR THE CONVENIENCE OF THE CONTRACTOR UNDER THE AUTHORITY OF:

DANNY M HURTADO, P.E.
TX LIC NO. 104266

11-01-22
DATE

SEE DISCLAIMER FOR LIMITATIONS OF USE.

CONTRACT DOCUMENTS DATED JUNE 10, 2022, AS PART OF THE BIDDING DOCUMENTS (DRAWINGS AND SPECIFICATIONS) AND SUBSEQUENTLY ISSUED ADDENDA HAVE BEEN MERGED INTO ONE CONFORMING SET OF DOCUMENTS FOR THE CONVENIENCE OF THE CONTRACTOR. IF INCONSISTENCIES OR AMBIGUITIES BETWEEN "CONFORMED" DOCUMENTS AND CONTRACT DOCUMENTS ARE FOUND, THE CONTRACT DOCUMENTS SHALL GOVERN.

REV	DATE	BY	DESCRIPTION
			CONFORMED DOCUMENTS

DESIGNED DMH
DRAWN SDW
CHECKED JPH
DATE NOVEMBER 2022

** ORIGINAL SEALED BY DANNY M. HURTADO 06-10-22 TX PE 104266 **

carollo®
TBPELS No. F-882

CITY OF AUSTIN
FOUNDED 1839

CITY OF AUSTIN

CITY OF AUSTIN
WILD HORSE RANCH WWTP EXPANSION
DEMOLITION
ALKALINITY SYSTEM RELOCATION

VERIFY SCALES
BAR IS ONE INCH ON ORIGINAL DRAWING
0 1"
IF NOT ONE INCH ON THIS SHEET, ADJUST SCALES ACCORDINGLY

JOB NO. 10976A.00
DRAWING NO. 01D05
SHEET NO. 103 OF 464

PROJECT NO. 10976A10 FILE NAME: 10976A1001D05.dgn

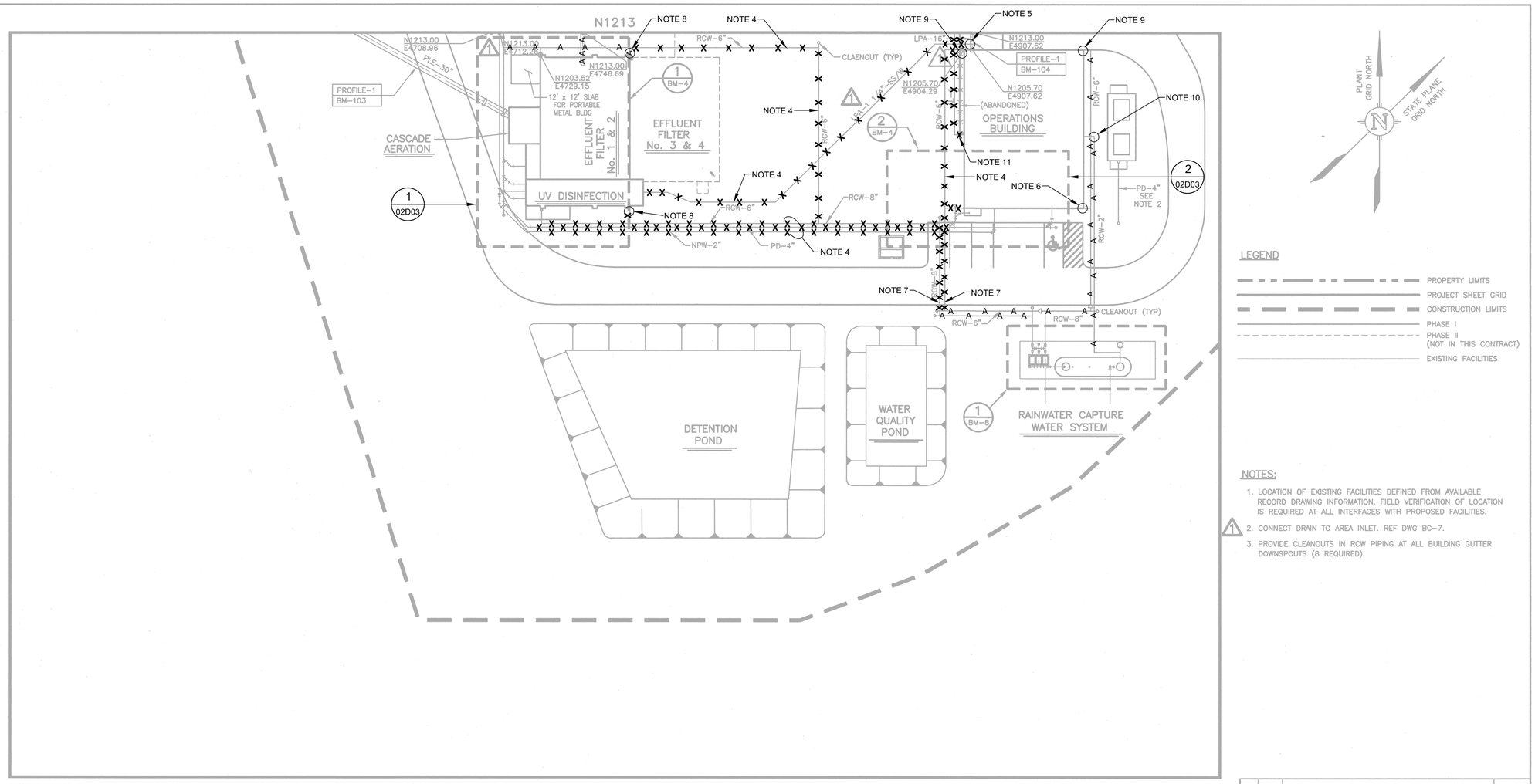

LEGEND

- PROPERTY LIMITS
- PROJECT SHEET GRID
- CONSTRUCTION LIMITS
- PHASE I
- PHASE II (NOT IN THIS CONTRACT)
- EXISTING FACILITIES

NOTES:

1. LOCATION OF EXISTING FACILITIES DEFINED FROM AVAILABLE RECORD DRAWING INFORMATION. FIELD VERIFICATION OF LOCATION IS REQUIRED AT ALL INTERFACES WITH PROPOSED FACILITIES.
2. CONNECT DRAIN TO AREA INLET. REF DWG BC-7.
3. PROVIDE CLEANOUTS IN RCW PIPING AT ALL BUILDING GUTTER DOWNSPOUTS (8 REQUIRED).

NOTES:

1. THIS IS A RECORD DRAWING FROM A PREVIOUS CONTRACT. ACTUAL FIELD CONDITIONS MAY BE DIFFERENT FROM THOSE SHOWN ON THIS DRAWING. CONTRACTOR TO FIELD VERIFY INSTALLED CONDITIONS IMPACTED BY OR IMPACTING THIS WORK PRIOR TO INITIATING THE WORK. CONTRACTOR SHALL REFER TO CONSTRUCTION DOCUMENTS FOR RESPONSIBILITIES RELATIVE TO VERIFICATION OF EXISTING FACILITIES AND COORDINATION WITH PLANT OPERATION.
2. COORDINATES SHOWN ON THIS RECORD DRAWING MAY NOT MATCH THE PLANT GRID ESTABLISHED FOR THIS PROJECT. CONTRACTOR TO FIELD VERIFY INSTALLED CONDITIONS IMPACTED BY OR IMPACTING THIS WORK PRIOR TO INITIATING THE WORK.
3. CONTRACTOR SHALL REFER TO SPECIFICATION 01140 - WORK RESTRICTIONS FOR SHUTDOWN REQUIREMENTS AND SEQUENCING OF DEMOLITION IN ORDER TO ALLOW THE PLANT TO REMAIN IN SERVICE DURING CONSTRUCTION.
4. EXCAVATE AND REMOVE ALL PIPING WITHIN FOOTPRINT OF NEW FILTER STRUCTURE AND ADMINISTRATION BUILDING.
5. PLUG 1 1/4" LPA AT CONNECTION WITH 16" LPA PIPE AND EXCAVATE AND REMOVE ALL OF 1 1/4" LPA PIPE.
6. DISCONNECT DOWNSPOUT AND REMOVE RCW PIPE WITHIN 4' OF SURFACE. CAP AND ABANDON IN PLACE REMAINING PIPE. SEE STORM DRAIN PLAN AND PROFILE DRAWINGS FOR INFORMATION ON CONNECTION OF DOWNSPOUT TO STORM GRATE.
7. EXCAVATE AND REMOVE RCW PIPE NORTH OF 90 DEGREE BEND. PLUG AND ABANDON IN PLACE REMAINING RCW PIPE TO THE EAST.
8. DISCONNECT DOWNSPOUT AND EXCAVATE AND REMOVE ALL BURIED 6" RCW PIPE. CONNECT DOWNSPOUT TO SPLASH BLOCK FOR GROUND DISCHARGE.
9. DISCONNECT DOWNSPOUT AND REMOVE RCW PIPE WITHIN 4' OF SURFACE. CAP AND ABANDON IN PLACE REMAINING PIPE.
10. CAP AND ABANDON 2" RCW PIPE SOUTH OF 90 DEGREE BEND. REFER TO YARD PIPING SHEETS FOR INFORMATION ON CONNECTION TO NEW PW PIPE.
11. EXCAVATE AND REMOVE 1" ALUM PIPES. REFER TO YARD PIPING FOR CONNECTION TO NEW 1" ALUM PIPES AT WALL PENETRATION.

LEGEND

- DEMOLITION
- ABANDON

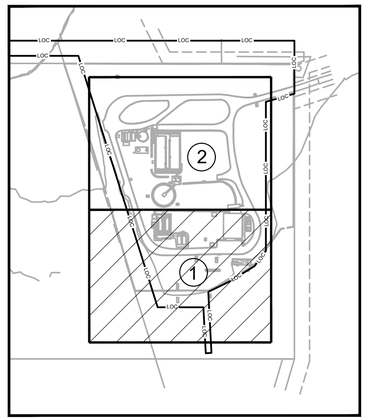

KEYMAP
NTS

THIS CONFORMED DOCUMENT IS RELEASED FOR THE CONVENIENCE OF THE CONTRACTOR UNDER THE AUTHORITY OF:

CASEY G. WAUTERS, P.E. — 11-01-22 DATE
TX LIC NO. 93889

SEE DISCLAIMER FOR LIMITATIONS OF USE.

CONTRACT DOCUMENTS DATED JUNE 10, 2022, AS PART OF THE BIDDING DOCUMENTS (DRAWINGS AND SPECIFICATIONS) AND SUBSEQUENTLY ISSUED ADDENDA HAVE BEEN MERGED INTO ONE CONFORMING SET OF DOCUMENTS FOR THE CONVENIENCE OF THE CONTRACTOR. IF INCONSISTENCIES OR AMBIGUITIES BETWEEN "CONFORMED" DOCUMENTS AND CONTRACT DOCUMENTS ARE FOUND, THE CONTRACT DOCUMENTS SHALL GOVERN.

RECORD DRAWING
THIS CONSTRUCTION DOCUMENT WAS PREPARED USING INFORMATION SUPPLIED BY THE CONTRACTOR TO REPRESENT CONSTRUCTION CHANGES. THIS DOCUMENT IS FOR INFORMATION AND REFERENCE IN CONNECTION WITH THE OWNER'S USE AND OCCUPANCY OF THE PROJECT AND IS NOT INTENDED FOR BID, PERMIT OR CONSTRUCTION.
BY: DATE: FEBRUARY 15, 2007

THE SEAL APPEARING ON THIS DOCUMENT WAS AUTHORIZED BY SHAY RALLS ROALSON, P.E. 83993 ON OCTOBER 31, 2003

WARNING
0 1/2 1
IF THIS BAR DOES NOT MEASURE 1" THEN DRAWING IS NOT TO SCALE

STATE OF TEXAS — SHAY RALLS ROALSON — 83993 — REGISTERED PROFESSIONAL ENGINEER

Dwg. No. BM-1

NO.	DATE	REVISION	APPROV.
4			
3			
2			
1	2/09/07	RECORD DRAWING	SMR

CITY OF AUSTIN, TEXAS
NORTHEAST INTERIM WASTEWATER TREATMENT PLANT

SITE PIPING

Turner Collie & Braden Inc.
ENGINEERS • PLANNERS • PROJECT MANAGERS

Unit PUBLIC WORKS	Scale 1"=20'	Date AUGUST 2003	
Designed PN	Checked SDN, SMR	Job No. 052-122094-0008	
Drawn PW	Approved SGE	Sheet 50/327	

REV	DATE	BY	DESCRIPTION
			CONFORMED DOCUMENTS

DESIGNED NL/CW
DRAWN AW
CHECKED SGE
DATE FEBRUARY 2022

** ORIGINAL SEALED BY CASEY G. WAUTERS, P.E. 2/28/2022 TX PE 93889 **

AECOM TECHNICAL SERVICES INC.
13640 BRIARWICK DRIVE, SUITE 200
AUSTIN, TEXAS 78729
WWW.AECOM.COM
TBPE REG. NO. F-3580

carollo
TBPE No. F-882

CITY OF AUSTIN
FOUNDED 1839
CITY OF AUSTIN

CITY OF AUSTIN
WILD HORSE RANCH WWTP EXPANSION
DEMOLITION
YARD PIPING DEMOLITION PLAN (SHEET 1 OF 5)

VERIFY SCALES
BAR IS ONE INCH ON ORIGINAL DRAWING
0 1"
IF NOT ONE INCH ON THIS SHEET, ADJUST SCALES ACCORDINGLY

JOB NO. 10976A.10
DRAWING NO. 02D01
SHEET NO. 104 OF 464

LAST SAVED BY: dseivert
E:\122094-Northeast\0008-Wildhorse Plant Design\RECORD-DWGS\VOLUME 1 OF 3\1BM-1.dwg - July 13, 2007 - 7:52am
PROJECT NO. 9585A10 FILE NAME: 9585A10_SheetSeed.dgn

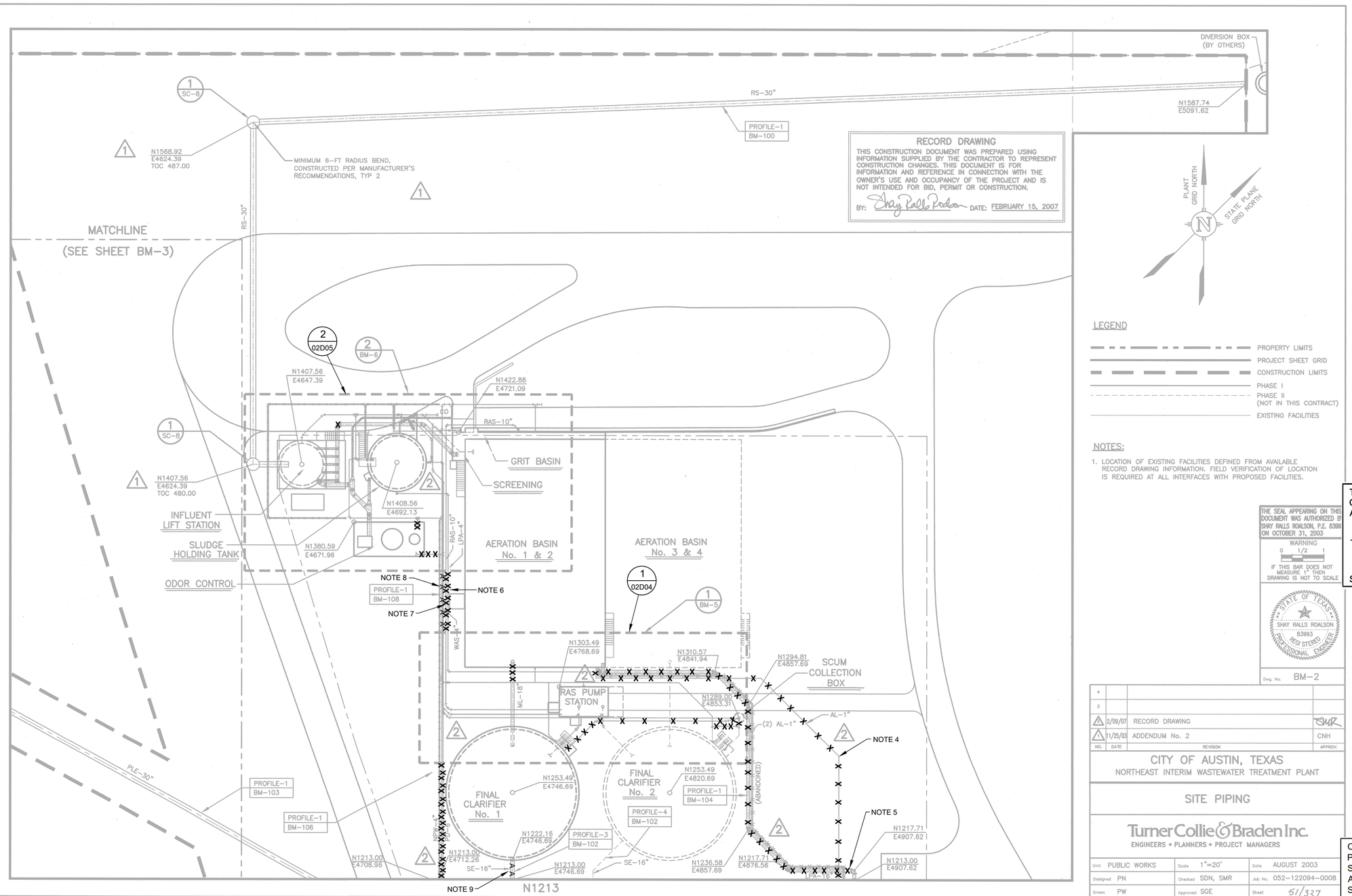

NOTES:

1. THIS IS A RECORD DRAWING FROM A PREVIOUS CONTRACT. ACTUAL FIELD CONDITIONS MAY BE DIFFERENT FROM THOSE SHOWN ON THIS DRAWING. CONTRACTOR TO FIELD VERIFY INSTALLED CONDITIONS IMPACTED BY OR IMPACTING THIS WORK PRIOR TO INITIATING THE WORK. CONTRACTOR SHALL REFER TO CONSTRUCTION DOCUMENTS FOR RESPONSIBILITIES RELATIVE TO VERIFICATION OF EXISTING FACILITIES AND COORDINATION WITH PLANT OPERATION.
2. COORDINATES SHOWN ON THIS RECORD DRAWING MAY NOT MATCH THE PLANT GRID ESTABLISHED FOR THIS PROJECT. CONTRACTOR TO FIELD VERIFY INSTALLED CONDITIONS IMPACTED BY OR IMPACTING THIS WORK PRIOR TO INITIATING THE WORK.
3. CONTRACTOR SHALL REFER TO SPECIFICATION 01140 - WORK RESTRICTIONS FOR SHUTDOWN REQUIREMENTS AND SEQUENCING OF DEMOLITION IN ORDER TO ALLOW THE PLANT TO REMAIN IN SERVICE DURING CONSTRUCTION.
4. EXCAVATE AND REMOVE 1" ALUM PIPE.
5. CUT AND EXCAVATE 16" LPA PIPE WEST UP TO AND INCLUDING THE 90 DEGREE BEND. SEE YARD PIPING SHEETS FOR CONNECTION TO NEW 16" LPA PIPE.
6. EXCAVATE AND REMOVE 4" LPA PIPE.
7. EXCAVATE AND REMOVE 10" RAS PIPE.
8. ABANDON IN PLACE 6" PD PIPE.
9. REFER TO YARD PIPING SHEETS FOR CONNECTION TO NEW 18" SE PIPE. CAP AND ABANDON IN PLACE EXISTING 16" SE PIPE SOUTH OF NEW CONNECTION.

LEGEND

DEMOLITION

ABANDON

THIS CONFORMED DOCUMENT IS RELEASED FOR THE CONVENIENCE OF THE CONTRACTOR UNDER THE AUTHORITY OF:

CASEY G. WAUTERS, P.E.
TX LIC NO. 93889

11-01-22
DATE

SEE DISCLAIMER FOR LIMITATIONS OF USE.

THE SEAL APPEARING ON THIS DOCUMENT WAS AUTHORIZED BY SHAY RALLS ROALSON, P.E. 83993 ON OCTOBER 31, 2003

WARNING
IF THIS BAR DOES NOT MEASURE 1" THEN DRAWING IS NOT TO SCALE.

STATE OF TEXAS
SHAY RALLS ROALSON
83993
REGISTERED
PROFESSIONAL ENGINEER

Dwg. No. BM-2

NO.	DATE	REVISION	APPROV.
4			
3			
2	2/09/07	RECORD DRAWING	SWR
1	11/25/03	ADDENDUM No. 2	CNH

CITY OF AUSTIN, TEXAS
NORTHEAST INTERIM WASTEWATER TREATMENT PLANT

SITE PIPING

Turner Collie & Braden Inc.
ENGINEERS • PLANNERS • PROJECT MANAGERS

Unit PUBLIC WORKS	Scale 1"=20'	Date AUGUST 2003	
Designed PN	Checked SDN, SMR	Job No. 052-122094-0008	
Drawn PW	Approved SGE	Sheet 51/327	

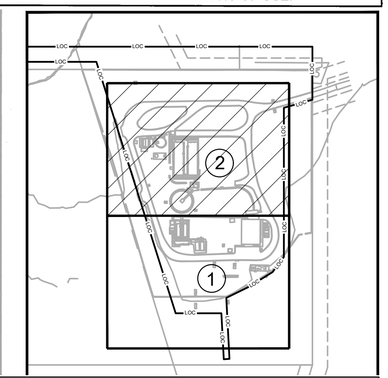

CONTRACT DOCUMENTS DATED JUNE 10, 2022, AS PART OF THE BIDDING DOCUMENTS (DRAWINGS AND SPECIFICATIONS) AND SUBSEQUENTLY ISSUED ADDENDA HAVE BEEN MERGED INTO ONE CONFORMING SET OF DOCUMENTS FOR THE CONVENIENCE OF THE CONTRACTOR. IF INCONSISTENCIES OR AMBIGUITIES BETWEEN "CONFORMED" DOCUMENTS AND CONTRACT DOCUMENTS ARE FOUND, THE CONTRACT DOCUMENTS SHALL GOVERN.

REV	DATE	BY	DESCRIPTION
			CONFORMED DOCUMENTS

DESIGNED NL/CW
DRAWN AW
CHECKED SGE
DATE FEBRUARY 2022

** ORIGINAL SEALED BY CASEY G. WAUTERS, P.E. 2/28/2022 TX PE 93889 **

AECOM TECHNICAL SERVICES INC.
13640 BRIARWICK DRIVE, SUITE 200
AUSTIN, TEXAS 78729
WWW.AECOM.COM
TBPE REG. NO. F-3580

carollo
TBPE No. F-882

CITY OF AUSTIN
FOUNDED 1839

CITY OF AUSTIN

WILD HORSE RANCH WWTP EXPANSION

DEMOLITION

YARD PIPING DEMOLITION PLAN
(SHEET 2 OF 5)

VERIFY SCALES
BAR IS ONE INCH ON ORIGINAL DRAWING
0 1"
IF NOT ONE INCH ON THIS SHEET, ADJUST SCALES ACCORDINGLY

JOB NO. 10976A.10
DRAWING NO. 02D02
SHEET NO. 105 OF 464

LAST SAVED BY: dseivert

E:\122094-Northeast\0008-Wildhorse Plant Design\RECORD-DWGS\VOLUME 1 OF 3\1BM-2.dwg - July 13, 2007 - 7:53am

PROJECT NO. 9585A10 FILE NAME: 9585A10_SheetSeed.dgn

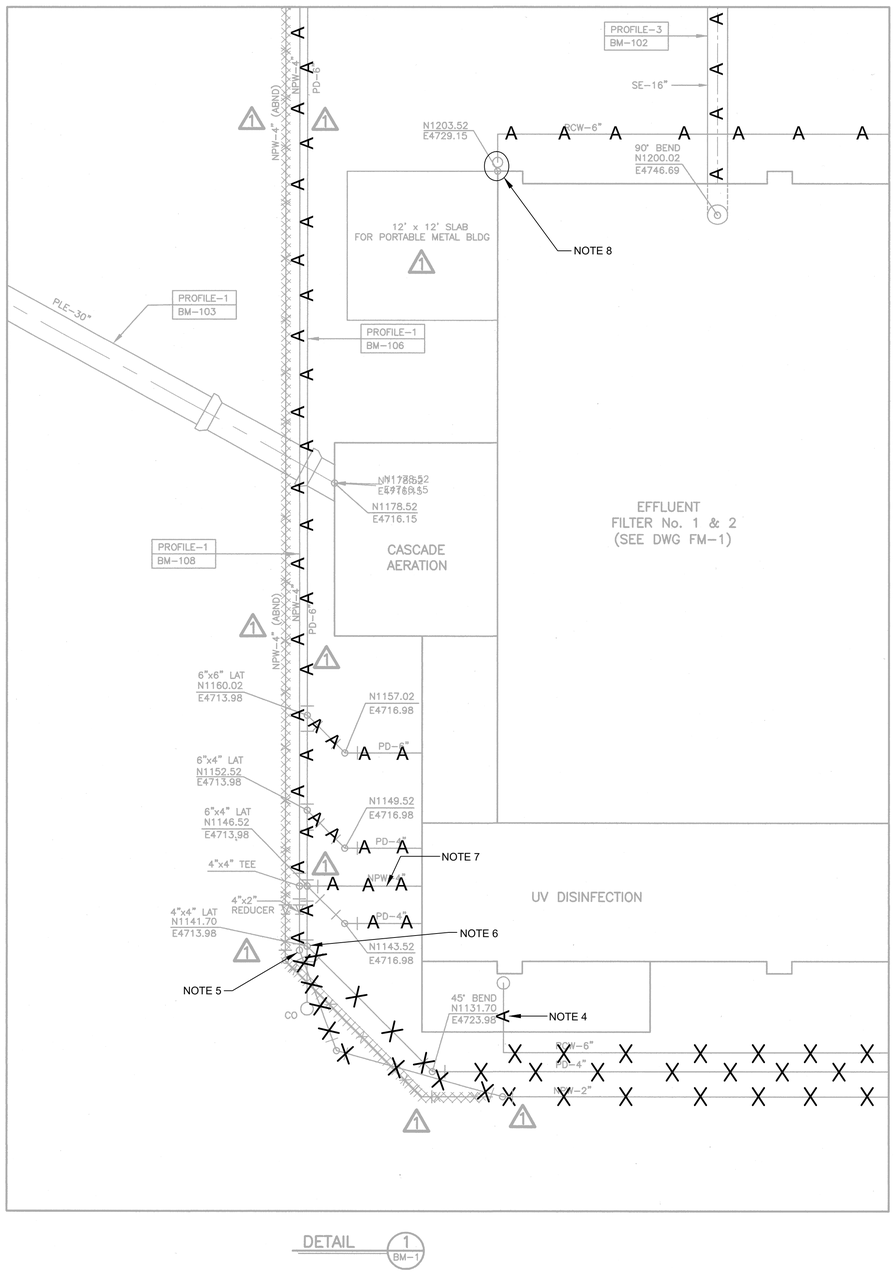

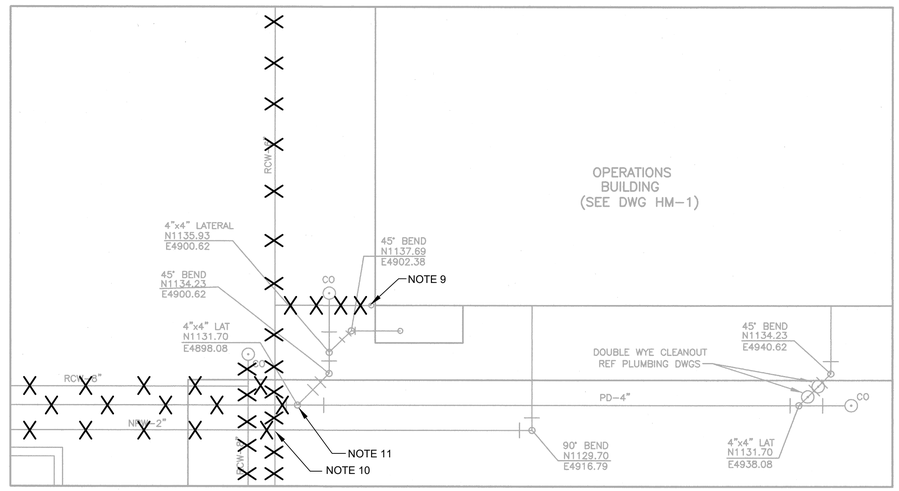

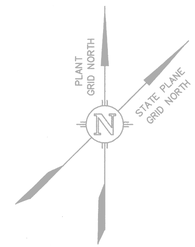

NOTES:

1. THIS IS A RECORD DRAWING FROM A PREVIOUS CONTRACT. ACTUAL FIELD CONDITIONS MAY BE DIFFERENT FROM THOSE SHOWN ON THIS DRAWING. CONTRACTOR TO FIELD VERIFY INSTALLED CONDITIONS IMPACTED BY OR IMPACTING THIS WORK PRIOR TO INITIATING THE WORK. CONTRACTOR SHALL REFER TO CONSTRUCTION DOCUMENTS FOR RESPONSIBILITIES RELATIVE TO VERIFICATION OF EXISTING FACILITIES AND COORDINATION WITH PLANT OPERATION.
2. COORDINATES SHOWN ON THIS RECORD DRAWING MAY NOT MATCH THE PLANT GRID ESTABLISHED FOR THIS PROJECT. CONTRACTOR TO FIELD VERIFY INSTALLED CONDITIONS IMPACTED BY OR IMPACTING THIS WORK PRIOR TO INITIATING THE WORK.
3. CONTRACTOR SHALL REFER TO SPECIFICATION 01140 - WORK RESTRICTIONS FOR SHUTDOWN REQUIREMENTS AND SEQUENCING OF DEMOLITION IN ORDER TO ALLOW THE PLANT TO REMAIN IN SERVICE DURING CONSTRUCTION.
4. REMOVE DOWNSPOUT AND CUT PIPE FLUSH WITH SLAB. CAP 6" RCW LINE AT EDGE OF SLAB AND PLUG WITH CONCRETE. EXCAVATE AND REMOVE ALL RCW 6" PIPE OUTSIDE OF CONCRETE SLAB. CONNECT DOWNSPOUT TO SPLASH BLOCK FOR GROUND DISCHARGE.
5. PLUG AND CAP NPW 2" LINE AT BEND TO THE NORTH. EXCAVATE AND REMOVE PIPE SOUTHEAST OF BEND.
6. EXCAVATE AND REMOVE PD-4" PIPE SOUTHEAST OF BEND. SEE YARD PIPING SHEETS FOR CONNECTION POINT TO NEW PD LINE.
7. EXCAVATE AND REMOVE NPW-4" PIPING WITHIN 4' OF SURFACE. CAP AND ABANDON IN PLACE REMAINING NPW PIPE.
8. DISCONNECT DOWNSPOUT AND REMOVE PIPE WITHIN 4' OF SURFACE. CAP AND ABANDON THE REST OF THE 6" RCW PIPE. CONNECT DOWNSPOUT TO SPLASH BLOCK FOR GROUND DISCHARGE.
9. DISCONNECT DOWNSPOUT AND EXCAVATE ENTIRETY OF BURIED 6" RCW PIPE. SEE STORM DRAIN PLAN AND PROFILE DRAWINGS FOR INFORMATION ON CONNECTION OF DOWNSPOUT TO STORMWATER PIPING.
10. CUT AND EXCAVATE 2" NPW PIPE WEST OF PIPE CROSSING. SEE YARD PIPING SHEET FOR INSTRUCTIONS ON CONNECTING TO NEW NPW YARD PIPING.
11. EXCAVATE AND REMOVE 4" PD PIPE WEST OF WYE. SEE YARD PIPING SHEET FOR CONNECTING TO NEW PD PIPE.

LEGEND

X X X X DEMOLITION

A A A A ABANDON

RECORD DRAWING
THIS CONSTRUCTION DOCUMENT WAS PREPARED USING INFORMATION SUPPLIED BY THE CONTRACTOR TO REPRESENT CONSTRUCTION CHANGES. THIS DOCUMENT IS FOR INFORMATION AND REFERENCE IN CONNECTION WITH THE OWNER'S USE AND OCCUPANCY OF THE PROJECT AND IS NOT INTENDED FOR BID, PERMIT OR CONSTRUCTION.
BY: Shay Ralls Roalson DATE: FEBRUARY 15, 2007

THE SEAL APPEARING ON THIS DOCUMENT WAS AUTHORIZED BY SHAY RALLS ROALSON, P.E. 83993 ON OCTOBER 31, 2003

WARNING
0 1/2 1
IF THIS BAR DOES NOT MEASURE 1" THEN DRAWING IS NOT TO SCALE

STATE OF TEXAS
SHAY RALLS ROALSON
83993
REGISTERED
PROFESSIONAL ENGINEER

NO.	DATE	REVISION	APPROV.
4			
3			
2			
1	2/09/07	RECORD DRAWING	SR

CITY OF AUSTIN, TEXAS
NORTHEAST INTERIM WASTEWATER TREATMENT PLANT

SITE PIPING DETAILS

Turner Collie & Braden Inc.
ENGINEERS • PLANNERS • PROJECT MANAGERS

Unit PUBLIC WORKS	Scale 1"=5'	Date AUGUST 2003	
Designed PN	Checked SDN, SMR	Job No. 052-122094-0008	
Drawn PW	Approved SGE	Sheet 53/327	
Dwg. No. BM–4			

THIS CONFORMED DOCUMENT IS RELEASED FOR THE CONVENIENCE OF THE CONTRACTOR UNDER THE AUTHORITY OF:

CASEY G. WAUTERS, P.E. 11-01-22
TX LIC NO. 93889 DATE

SEE DISCLAIMER FOR LIMITATIONS OF USE.

CONTRACT DOCUMENTS DATED JUNE 10, 2022, AS PART OF THE BIDDING DOCUMENTS (DRAWINGS AND SPECIFICATIONS) AND SUBSEQUENTLY ISSUED ADDENDA HAVE BEEN MERGED INTO ONE CONFORMING SET OF DOCUMENTS FOR THE CONVENIENCE OF THE CONTRACTOR. IF INCONSISTENCIES OR AMBIGUITIES BETWEEN "CONFORMED" DOCUMENTS AND CONTRACT DOCUMENTS ARE FOUND, THE CONTRACT DOCUMENTS SHALL GOVERN.

REV	DATE	BY	DESCRIPTION
			CONFORMED DOCUMENTS

DESIGNED NL/CW
DRAWN AW
CHECKED SGE
DATE FEBRUARY 2022

** ORIGINAL SEALED BY CASEY G. WAUTERS, P.E. 2/28/2022 TX PE 93889 **

AECOM TECHNICAL SERVICES INC.
13640 BRIARWICK DRIVE, SUITE 200
AUSTIN, TEXAS 78729
WWW.AECOM.COM
TBPE REG. NO. F-3580

carollo
TBPE No. F-882

CITY OF AUSTIN
FOUNDED 1839

CITY OF AUSTIN

CITY OF AUSTIN
WILD HORSE RANCH WWTP EXPANSION
DEMOLITION
YARD PIPING DEMOLITION PLAN
(SHEET 3 OF 5)

VERIFY SCALES
BAR IS ONE INCH ON ORIGINAL DRAWING
0 1"
IF NOT ONE INCH ON THIS SHEET, ADJUST SCALES ACCORDINGLY

JOB NO. 10976A.10
DRAWING NO. 02D03
SHEET NO. 106 OF 464

LAST SAVED BY: dseivert
E:\122094-Northeast\0008-Wildhorse Plant Design\RECORD-DWGS\VOLUME 1 OF 3\BM-4.dwg : May 10, 2007 : 9:47am

PROJECT NO. 9585A10 FILE NAME: 9585A10_SheetSeed.dgn

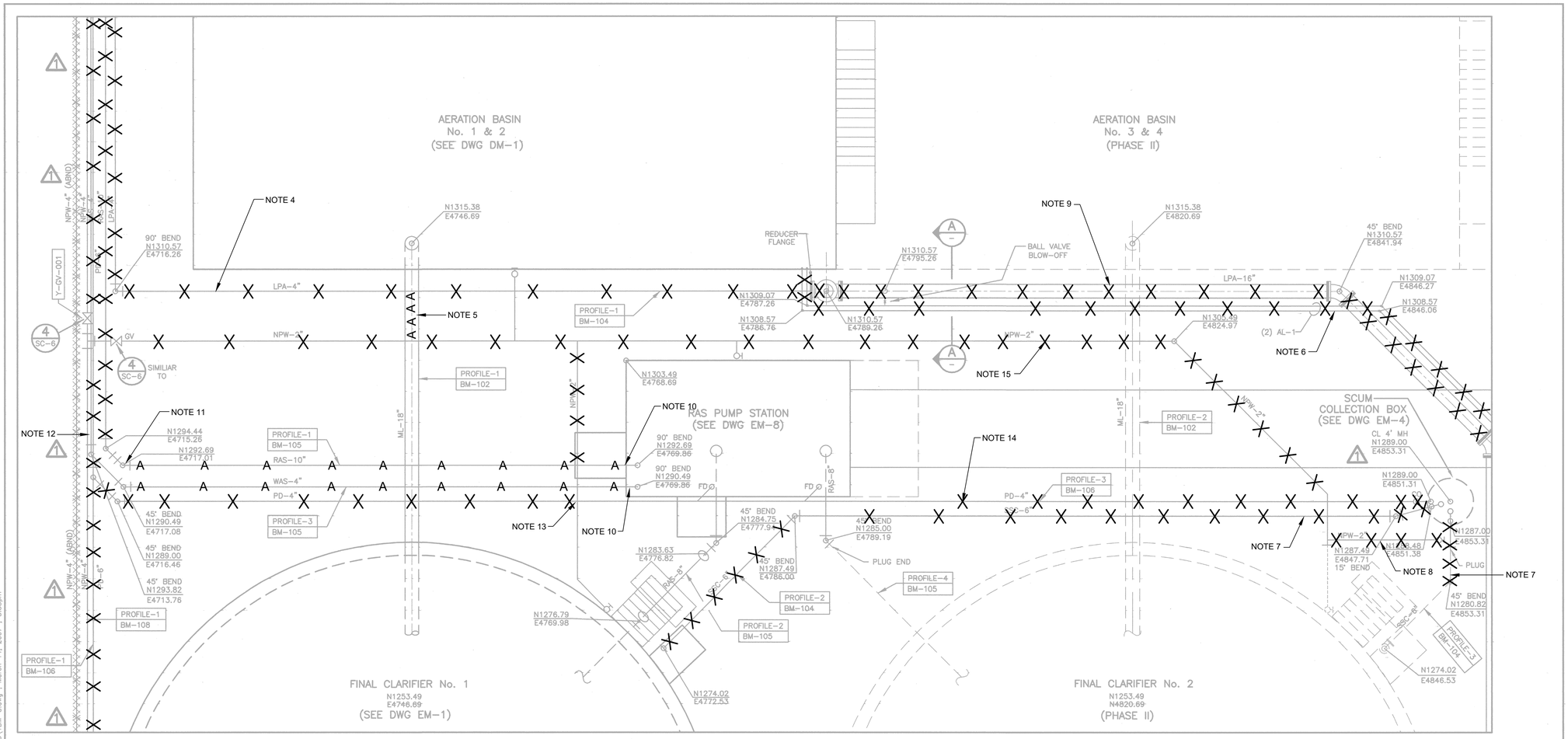

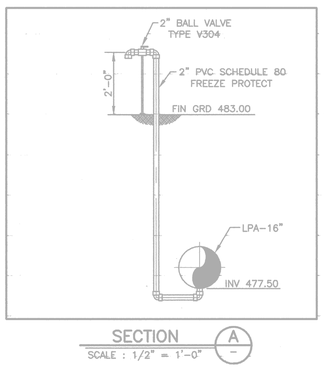

SECTION A
SCALE : 1/2" = 1'-0"

DETAIL 1 BM-2

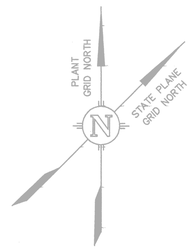

LEGEND

PHASE II (NOT IN THIS CONTRACT)

RECORD DRAWING

THIS CONSTRUCTION DOCUMENT WAS PREPARED USING INFORMATION SUPPLIED BY THE CONTRACTOR TO REPRESENT CONSTRUCTION CHANGES. THIS DOCUMENT IS FOR INFORMATION AND REFERENCE IN CONNECTION WITH THE OWNER'S USE AND OCCUPANCY OF THE PROJECT AND IS NOT INTENDED FOR BID, PERMIT OR CONSTRUCTION.

BY: Shay Ralls Roalson DATE: FEBRUARY 15, 2007

NOTES:

1. THIS IS A RECORD DRAWING FROM A PREVIOUS CONTRACT. ACTUAL FIELD CONDITIONS MAY BE DIFFERENT FROM THOSE SHOWN ON THIS DRAWING. CONTRACTOR TO FIELD VERIFY INSTALLED CONDITIONS IMPACTED BY OR IMPACTING THIS WORK PRIOR TO INITIATING THE WORK. CONTRACTOR SHALL REFER TO CONSTRUCTION DOCUMENTS FOR RESPONSIBILITIES RELATIVE TO VERIFICATION OF EXISTING FACILITIES AND COORDINATION WITH PLANT OPERATION.
2. COORDINATES SHOWN ON THIS RECORD DRAWING MAY NOT MATCH THE PLANT GRID ESTABLISHED FOR THIS PROJECT. CONTRACTOR TO FIELD VERIFY INSTALLED CONDITIONS IMPACTED BY OR IMPACTING THIS WORK PRIOR TO INITIATING THE WORK.
3. CONTRACTOR SHALL REFER TO SPECIFICATION 01140 - WORK RESTRICTIONS FOR SHUTDOWN REQUIREMENTS AND SEQUENCING OF DEMOLITION IN ORDER TO ALLOW THE PLANT TO REMAIN IN SERVICE DURING CONSTRUCTION.
4. EXCAVATE AND REMOVE ENTIRETY OF 4" LPA LINE.
5. LOCATE CONNECTION POINT FOR NEW 18" ML PIPE ON YARD PIPING SHEETS. CAP AND ABANDON REMAINING PIPE. REFER TO AERATION BASIN 1 AND 2 DEMOLITION SHEETS FOR DEMOLITION REQUIREMENTS AT STRUCTURE.
6. EXCAVATE AND REMOVE 1" ALUM LINE. REFER TO AERATION BASIN 1 AND 2 DEMOLITION SHEETS FOR DEMOLITION REQUIREMENTS AT STRUCTURE.
7. EXCAVATE AND REMOVE 6" SSC PIPE. REFER TO CLARIFIER DEMOLITION SHEETS FOR DEMOLITION REQUIREMENTS AT STRUCTURE.
8. CAP / PLUG NPW PIPE AT 90 DEGREE BEND. EXCAVATE AND REMOVE 2" NPW PIPE TO THE EAST OF 90 DEGREE BEND AND WEST OF RISER.
9. EXCAVATE AND REMOVE 16" LPA PIPE, REFER TO AERATION BASIN 1 AND 2 DEMOLITION SHEETS FOR DEMOLITION REQUIREMENTS AT STRUCTURE.
10. REFER TO RAS PUMP STATION No. 1 DEMOLITION SHEETS FOR DEMOLITION REQUIREMENTS AT STRUCTURE.
11. CAP AND ABANDON 10" RAS PIPE EAST OF BEND. EXCAVATE AND REMOVE 10" RAS PIPE NORTH / NORTHWEST OF BEND.
12. REFER TO SLUDGE HOLDING TANK No. 1 MECHANICAL DRAWINGS FOR LOCATION OF CONNECTION TO NEW 4" WAS PIPE. CAP AND ABANDON IN PLACE 4" WAS LINE SOUTH OF CONNECTION.
13. REFER TO YARD PIPING SHEETS FOR CONNECTION TO NEW DRAIN LINE. EXCAVATE AND REMOVE ALL EXISTING PD PIPING WEST OF NEW CONNECTION.
14. REFER TO YARD PIPING SHEETS FOR CONNECTION TO NEW DRAIN LINE. EXCAVATE AND REMOVE ALL EXISTING PD PIPING EAST OF NEW CONNECTION.
15. REMOVE AND REPLACE EXISTING 2" NPW WITH NEW 4" NPW PIPE. REFER TO YARD PIPING SHEETS FOR NEW PLACEMENT. RECONNECT NEW NPW PIPING WITH EXISTING CONNECTIONS AT STRUCTURES.

LEGEND

X X X X DEMOLITION

A A A A ABANDON

THE SEAL APPEARING ON THIS DOCUMENT WAS AUTHORIZED BY SHAY RALLS ROALSON, P.E. 83993 ON OCTOBER 31, 2003

NO.	DATE	REVISION	APPROV.
4			
3			
2			
1	2/09/07	RECORD DRAWING	SK

WARNING
0 1/2 1
IF THIS BAR DOES NOT MEASURE 1" THEN DRAWING IS NOT TO SCALE

STATE OF TEXAS
SHAY RALLS ROALSON
83993
REGISTERED PROFESSIONAL ENGINEER

Dwg. No. BM-5

CITY OF AUSTIN, TEXAS
NORTHEAST INTERIM WASTEWATER TREATMENT PLANT

SITE PIPING DETAIL

Turner Collie & Braden Inc.
ENGINEERS • PLANNERS • PROJECT MANAGERS

Unit PUBLIC WORKS	Scale 1"=5'	Date AUGUST 2003	
Designed PN	Checked SDN, SMR	Job No. 052-122094-0008	
Drawn PW	Approved SGE	Sheet 54/327	

THIS CONFORMED DOCUMENT IS RELEASED FOR THE CONVENIENCE OF THE CONTRACTOR UNDER THE AUTHORITY OF:

CASEY G. WAUTERS, P.E. 11-01-22
TX LIC NO. 93889 DATE

SEE DISCLAIMER FOR LIMITATIONS OF USE.

CONTRACT DOCUMENTS DATED JUNE 10, 2022, AS PART OF THE BIDDING DOCUMENTS (DRAWINGS AND SPECIFICATIONS) AND SUBSEQUENTLY ISSUED ADDENDA HAVE BEEN MERGED INTO ONE CONFORMING SET OF DOCUMENTS FOR THE CONVENIENCE OF THE CONTRACTOR. IF INCONSISTENCIES OR AMBIGUITIES BETWEEN "CONFORMED" DOCUMENTS AND CONTRACT DOCUMENTS ARE FOUND, THE CONTRACT DOCUMENTS SHALL GOVERN.

REV	DATE	BY	DESCRIPTION
			CONFORMED DOCUMENTS

DESIGNED NL/CW
DRAWN AW
CHECKED SGE
DATE FEBRUARY 2022

** ORIGINAL SEALED BY CASEY G. WAUTERS, P.E. 2/28/2022 TX PE 93889 **

AECOM TECHNICAL SERVICES INC.
13640 BRIARWICK DRIVE, SUITE 200
AUSTIN, TEXAS 78729
WWW.AECOM.COM
TBPE REG. NO. F-3580

carollo
TBPE No. F-882

CITY OF AUSTIN
FOUNDED 1839

CITY OF AUSTIN
WILD HORSE RANCH WWTP EXPANSION
DEMOLITION
YARD PIPING DEMOLITION PLAN
(SHEET 4 OF 5)

VERIFY SCALES
BAR IS ONE INCH ON ORIGINAL DRAWING
0 1"
IF NOT ONE INCH ON THIS SHEET, ADJUST SCALES ACCORDINGLY

JOB NO. 10976A.10
DRAWING NO. 02D04
SHEET NO. 107 OF 464

LAST SAVED BY: dseivert

E:\122094-Northeast\0008-Wildhorse Plant Design\RECORD-DWGS\VOLUME 1 OF 3\BM-5.dwg : March 14, 2007 - 3:58pm

PROJECT NO. 9585A10 FILE NAME: 9585A10_SheetSeed.dgn

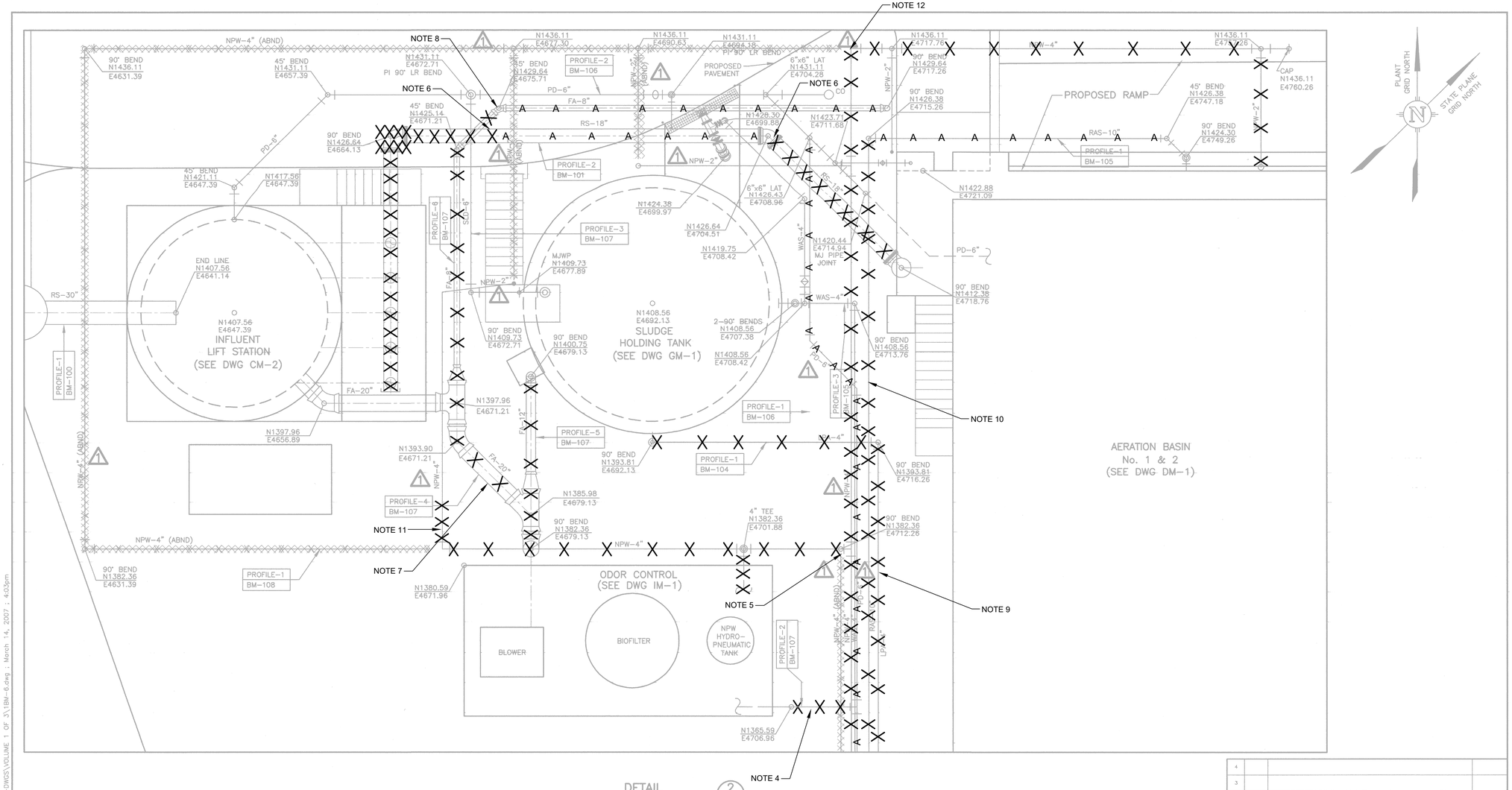

NOTES:

1. THIS IS A RECORD DRAWING FROM A PREVIOUS CONTRACT. ACTUAL FIELD CONDITIONS MAY BE DIFFERENT FROM THOSE SHOWN ON THIS DRAWING. CONTRACTOR TO FIELD VERIFY INSTALLED CONDITIONS IMPACTED BY OR IMPACTING THIS WORK PRIOR TO INITIATING THE WORK. CONTRACTOR SHALL REFER TO CONSTRUCTION DOCUMENTS FOR RESPONSIBILITIES RELATIVE TO VERIFICATION OF EXISTING FACILITIES AND COORDINATION WITH PLANT OPERATION.
2. COORDINATES SHOWN ON THIS RECORD DRAWING MAY NOT MATCH THE PLANT GRID ESTABLISHED FOR THIS PROJECT. CONTRACTOR TO FIELD VERIFY INSTALLED CONDITIONS IMPACTED BY OR IMPACTING THIS WORK PRIOR TO INITIATING THE WORK.
3. CONTRACTOR SHALL REFER TO SPECIFICATION 01140 - WORK RESTRICTIONS FOR SHUTDOWN REQUIREMENTS AND SEQUENCING OF DEMOLITION IN ORDER TO ALLOW THE PLANT TO REMAIN IN SERVICE DURING CONSTRUCTION.
4. EXCAVATE AND REMOVE 6" PD PIPE ABOVE AND BELOW GROUND AT STRUCTURE. CAP AT VERTICAL 90 DEGREE BEND AND ABANDON REMAINING 6" PD IN PLACE.
5. CAP 4" NPW PIPE JUST WEST OF TEE. EXCAVATE AND REMOVE ALL 4" NPW PIPE WEST OF THE CAP / TEE UP TO THE POINT OF CONNECTION WITH NEW 4" NPW AS SHOWN ON YARD PIPING SHEETS.
6. EXCAVATE AND REMOVE EXISTING 18" RI WEST OF NEW 18" RI PIPE, CAP AND ABANDON IN PLACE REMAINING EXISTING 18" RI PIPE. REMOVE AND CAP AND ABANDON AS NEEDED FOR NEW PIPE CROSSINGS BETWEEN SLUDGE HOLDING TANK AND AERATION BASIN.
7. EXCAVATE AND REMOVE 20" AND 12" FOUL AIR LINE UP TO AND INCLUDING TEE AS SHOWN. REFER TO YARD PIPING FOR INFORMATION ON CONNECTION TO NEW PIPING. REFER TO SLUDGE HOLDING TANK DEMOLITION SHEET FOR DEMO INSTRUCTIONS AT STRUCTURE.
8. CAP AND ABANDON 8" FOUL AIR PIPE TO THE EAST OF 45° BEND.
9. EXCAVATE AND REMOVE 4" LPA PIPE. REFER TO SLUDGE HOLDING TANK DEMOLITION SHEET FOR DEMO INSTRUCTIONS AT STRUCTURE.
10. EXCAVATE AND REMOVE 10" RAS PIPE RUNNING NORTH - SOUTH. CAP AND ABANDON REMAINING PIPE AT 90 DEGREE BEND. REFER TO AERATION BASIN 1 AND 2 DEMOLITION DRAWINGS FOR DEMOLITION INSTRUCTIONS AT STRUCTURE.
11. REFER TO YARD PIPING SHEETS FOR CONNECTION POINT TO NEW 4" NPW PIPE. EXCAVATE AND REMOVE EXISTING 4" NPW PIPE SOUTH OF NEW CONNECTION.
12. EXCAVATE AND REMOVE ALL NPW PIPE AS SHOWN.

LEGEND

DEMOLITION

ABANDON

RECORD DRAWING

THIS CONSTRUCTION DOCUMENT WAS PREPARED USING INFORMATION SUPPLIED BY THE CONTRACTOR TO REPRESENT CONSTRUCTION CHANGES. THIS DOCUMENT IS FOR INFORMATION AND REFERENCE IN CONNECTION WITH THE OWNER'S USE AND OCCUPANCY OF THE PROJECT AND IS NOT INTENDED FOR BID, PERMIT OR CONSTRUCTION.

BY: Shay Ralls Roalson DATE: FEBRUARY 15, 2007

THE SEAL APPEARING ON THIS DOCUMENT WAS AUTHORIZED BY SHAY RALLS ROALSON, P.E. 83993 ON OCTOBER 31, 2003

WARNING
0 1/2 1
IF THIS BAR DOES NOT MEASURE 1" THEN DRAWING IS NOT TO SCALE

STATE OF TEXAS
SHAY RALLS ROALSON
83993
REGISTERED PROFESSIONAL ENGINEER

NO.	DATE	REVISION	APPROV.
4			
3			
2			
1	2/09/07	RECORD DRAWING	SK

CITY OF AUSTIN, TEXAS
NORTHEAST INTERIM WASTEWATER TREATMENT PLANT

SITE PIPING DETAIL

Turner Collie & Braden Inc.
ENGINEERS • PLANNERS • PROJECT MANAGERS

Unit PUBLIC WORKS	Scale 1"=5'	Date AUGUST 2003	
Designed PN	Checked SDN, SMR	Job No. 052-122094-0008	
Drawn PW	Approved SGE	Sheet 55/327	
Dwg. No. BM–6			

THIS CONFORMED DOCUMENT IS RELEASED FOR THE CONVENIENCE OF THE CONTRACTOR UNDER THE AUTHORITY OF:

CASEY G. WAUTERS, P.E. 11-01-22
TX LIC NO. 93889 DATE

SEE DISCLAIMER FOR LIMITATIONS OF USE.

CONTRACT DOCUMENTS DATED JUNE 10, 2022, AS PART OF THE BIDDING DOCUMENTS (DRAWINGS AND SPECIFICATIONS) AND SUBSEQUENTLY ISSUED ADDENDA HAVE BEEN MERGED INTO ONE CONFORMING SET OF DOCUMENTS FOR THE CONVENIENCE OF THE CONTRACTOR. IF INCONSISTENCIES OR AMBIGUITIES BETWEEN "CONFORMED" DOCUMENTS AND CONTRACT DOCUMENTS ARE FOUND, THE CONTRACT DOCUMENTS SHALL GOVERN.

REV	DATE	BY	DESCRIPTION
			CONFORMED DOCUMENTS

DESIGNED NL/CW
DRAWN AW
CHECKED SGE
DATE FEBRUARY 2022

** ORIGINAL SEALED BY CASEY G. WAUTERS, P.E. 2/28/2022 TX PE 93889 **

AECOM TECHNICAL SERVICES INC.
13640 BRIARWICK DRIVE, SUITE 200
AUSTIN, TEXAS 78729
WWW.AECOM.COM
TBPE REG. NO. F-3580

TBPE No. F-882

CITY OF AUSTIN
FOUNDED 1839

CITY OF AUSTIN

CITY OF AUSTIN
WILD HORSE RANCH WWTP EXPANSION
DEMOLITION
YARD PIPING DEMOLITION PLAN (SHEET 5 OF 5)

VERIFY SCALES
BAR IS ONE INCH ON ORIGINAL DRAWING
0 1"
IF NOT ONE INCH ON THIS SHEET, ADJUST SCALES ACCORDINGLY

JOB NO. 10976A.10
DRAWING NO. 02D05
SHEET NO. 108 OF 464

LAST SAVED BY: dseivert

E:\122094-Northeast\0008-Wildhorse Plant Design\RECORD-DWGS\VOLUME 1 OF 3\1BM-6.dwg : March 14, 2007 : 4:03pm

PROJECT NO. 9585A10 FILE NAME: 9585A10_SheetSeed.dgn

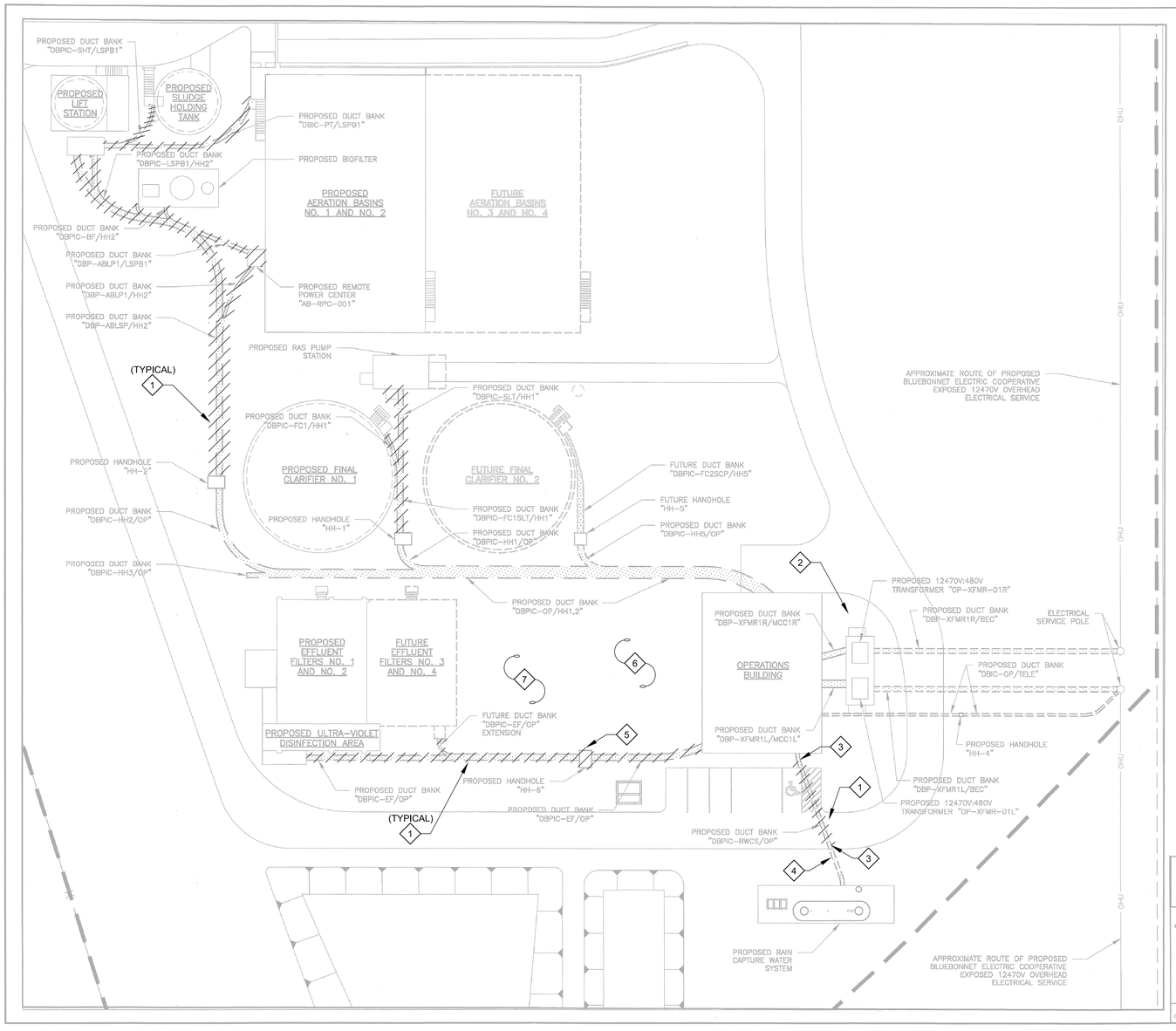

GENERAL NOTES:

1. LIGHT LINEWORK DENOTES FUTURE EQUIPMENT UNLESS NOTED OTHERWISE. DARK LINEWORK DENOTES PROPOSED EQUIPMENT.
2. THIS DRAWING IS INTENDED TO REPRESENT AN OVERVIEW OF THE PROPOSED AND FUTURE DUCT BANK SYSTEMS. ONLY MAJOR ELECTRICAL EQUIPMENT HAS BEEN SHOWN FOR CLARITY. SOME OF THE DUCTBANK SYSTEMS ARE FURNISHED AND INSTALLED BY OTHERS. REFER TO THE ELECTRICAL SITE PLANS FOR ADDITIONAL INFORMATION.
3. THIS DRAWING IS NOT INTENDED FOR CONSTRUCTION PURPOSES. ADDITIONALLY, THIS DRAWING SHALL NOT BE USED TO DELINEATE/SPECIFY/ETC., CONTRACT/CONSTRUCTION/ETC., LIMITS/EXTENTS/ETC., IN ANY WAY, SHAPE, FORM OR FASHION.
4. NOT ALL PROPOSED, EXISTING, OR FUTURE EQUIPMENT IS SHOWN FOR CLARITY.

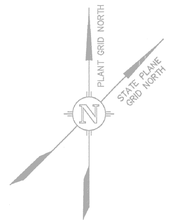

SCALE: 1" = 20'-0"

RECORD DRAWING

THIS CONSTRUCTION DOCUMENT WAS PREPARED USING INFORMATION SUPPLIED BY THE CONTRACTOR TO REPRESENT CONSTRUCTION CHANGES. THIS DOCUMENT IS FOR INFORMATION AND REFERENCE IN CONNECTION WITH THE OWNER'S USE AND OCCUPANCY OF THE PROJECT AND IS NOT INTENDED FOR BID, PERMIT OR CONSTRUCTION.

BY: K.A. Harutunian DATE: 1/5/2007

REUSE OF DOCUMENTS
This document and the ideas and designs incorporated herein as an instrument of professional service has been developed, designed and prepared by Harutunian Engineering, Inc. and is not to be used, in whole or part, for any other project without the written authorization of the City of Austin and Harutunian Engineering, Inc. © 2003

HARUTUNIAN ENGINEERING INCORPORATED
ENGINEERING AND ENVIRONMENTAL CONSULTANTS
305 EAST HUNTLAND DRIVE SUITE 500 AUSTIN, TEXAS 78752

NO.	DATE	REVISION	APPROV.
4			
3			
2			
1			

WARNING
0 1/2 1
IF THIS BAR DOES NOT MEASURE 1" THEN DRAWING IS NOT TO SCALE

K.A. HARUTUNIAN 59181 STATE OF TEXAS REGISTERED PROFESSIONAL ENGINEER 10/18/2003

Dwg. No. BE-30

CITY OF AUSTIN, TEXAS
NORTHEAST INTERIM WASTEWATER TREATMENT PLANT

OVERALL SITE ELECTRICAL PLAN
(SHEET 1 OF 1)

Turner Collie & Braden Inc.
ENGINEERS • PLANNERS • PROJECT MANAGERS

Unit PUBLIC WORKS	Scale 1"=20'	Date OCTOBER 2003	
Designed HEI	Checked HEI	Job No. 052-122094-0008	
Drawn HEI	Approved HEI	Sheet 73/327	

KEY NOTES

1. DEMOLISH UNDERGROUND DUCT BANKS IN THEIR ENTIRETY AS SHOWN IN HATCHED AREAS. IN VICINITY OF DEMOLITION, TAKE CARE TO AVOID DAMAGING OR COMPROMISING STRUCTURAL INTEGRITY OF ALL UNDERGROUND PIPES AND MANHOLES THAT ARE TO REMAIN. ALL DUCT BANK SIZES AND ROUTES ARE UNKNOWN. FIELD VERIFY ACTUAL CONDITIONS PRIOR TO COMMENCING DEMOLITION. COORDINATE WITH CIVIL/STRUCTURAL.
2. THERE IS AN EXISTING GENERATOR "OP-GEN-01" IN THIS LOCATION WHICH SHALL REMAIN AND BE REUSED DURING RENOVATION ACTIVITIES.
3. CUT UNDERGROUND DUCT BANK AT THIS LOCATION. CAP CONDUITS PER DETAIL E944/[00TE11]. CONTRACTOR SHALL BE AWARE THAT A PROPOSED UNDERGROUND MECHANICAL PIPE SHALL BE ROUTING UNDERNEATH THE ROADWAY WITHIN THE VICINITY OF THIS EXISTING UNDERGROUND DUCT BANK. COORDINATE WITH MECHANICAL PRIOR TO COMMENCING DEMOLITION OR RENOVATION ACTIVITIES.
4. EXISTING UNDERGROUND DUCT BANK TO REMAIN IN PLACE AND SHALL BE ABANDONED IN PLACE.
5. DEMOLISH EXISTING MANHOLE INCLUDING EXISTING CONDUIT AND CONDUCTORS IN THEIR ENTIRETY WHETHER OR NOT SHOWN ON THESE RECORD DRAWINGS, UNLESS OTHERWISE NOTED. CONTRACTOR SHALL FIELD VERIFY PRIOR TO COMMENCING DEMOLITION ACTIVITIES. ALSO COORDINATE WITH MECHANICAL/CIVIL AND REFER TO STRUCTURAL/CIVIL DEMOLITION DRAWINGS FOR ADDITIONAL INFORMATION.
6. DEMOLISH EXISTING UNDERGROUND DUCT BANK SYSTEM, NOT SHOWN ON THIS RECORD DRAWING, WHICH ROUTES FROM A PULLBOX MOUNTED ON THE SOUTH WALL OF THE OPERATIONS BUILDING TO THE TEMPORARY FILTERS IN ITS ENTIRETY. ROUTE OF UNDERGROUND DUCT BANK SYSTEM IS UNKNOWN. REFER TO OPERATIONS BUILDING DEMOLITION DRAWINGS FOR APPROXIMATE LOCATION OF TEMPORARY PULLBOX AND ADDITIONAL INFORMATION. ALSO, REFER TO DEMOLITION TEMPORARY FILTER SYSTEM DRAWINGS FOR ADDITIONAL INFORMATION.
7. DEMOLISH TEMPORARY FILTER SYSTEM ELECTRICAL, INSTRUMENTATION AND CONTROLS EQUIPMENT, NOT SHOWN ON THIS DRAWING, IN ITS ENTIRETY. REFER TO TEMPORARY FILTER SYSTEM AREA DEMOLITION DRAWINGS FOR ADDITIONAL INFORMATION.

GENERAL NOTES:

1. NOT ALL DEMOLITION REQUIREMENTS ARE SHOWN ON THIS DRAWING. REFER TO DETAILED AREA DEMOLITION DRAWINGS FOR ADDITIONAL REQUIREMENTS AND INFORMATION.
2. REFER TO ENLARGED SITE PLAN AREA DRAWINGS [05DE02] THROUGH [05DE05] FOR ADDITIONAL REQUIREMENTS AND INFORMATION.

THIS CONFORMED DOCUMENT IS RELEASED FOR THE CONVENIENCE OF THE CONTRACTOR UNDER THE AUTHORITY OF:

K. A. Harutunian — 11-01-22

K. A. HARUTUNIAN, P.E. — DATE
TX LIC NO. 59181

SEE DISCLAIMER FOR LIMITATIONS OF USE.

CONTRACT DOCUMENTS DATED FEBRUARY 28, 2022, AS PART OF THE BIDDING DOCUMENTS (DRAWINGS AND SPECIFICATIONS) AND SUBSEQUENTLY ISSUED ADDENDA HAVE BEEN MERGED INTO ONE CONFORMING SET OF DOCUMENTS FOR THE CONVENIENCE OF THE CONTRACTOR. IF INCONSISTENCIES OR AMBIGUITIES BETWEEN "CONFORMED" DOCUMENTS AND CONTRACT DOCUMENTS ARE FOUND, THE CONTRACT DOCUMENTS SHALL GOVERN.

This document, and the designs incorporated herein, is an instrument of professional service that has been developed, designed and prepared by Harutunian Engineering, Inc., and is not to be used, in whole or in part, for any other project without giving written notice to Harutunian Engineering, Inc.

REV	DATE	BY	DESCRIPTION
			CONFORMED DOCUMENTS

DESIGNED HEI
DRAWN HEI
CHECKED HEI
DATE NOVEMBER 2022

** ORIGINAL SEALED BY K.A. HARUTUNIAN 02-28-22 TX PE 59181 **

HARUTUNIAN ENGINEERING INCORPORATED
ENGINEERING AND ENVIRONMENTAL CONSULTANTS
8100 CROSS PARK DRIVE AUSTIN, TEXAS 78754 TBPE REGISTRATION NO. F-2408

carollo® TBPELS No. F-882

CITY OF AUSTIN FOUNDED 1839 **CITY OF AUSTIN**

CITY OF AUSTIN
WILD HORSE RANCH WWTP EXPANSION
DEMOLITION
SITE DUCT BANK PLAN - DEMOLITION - 1

VERIFY SCALES
BAR IS ONE INCH ON ORIGINAL DRAWING
0 1"
IF NOT ONE INCH ON THIS SHEET, ADJUST SCALES ACCORDINGLY

JOB NO. 10976A.00
DRAWING NO. 05DE01
SHEET NO. 109 OF 464

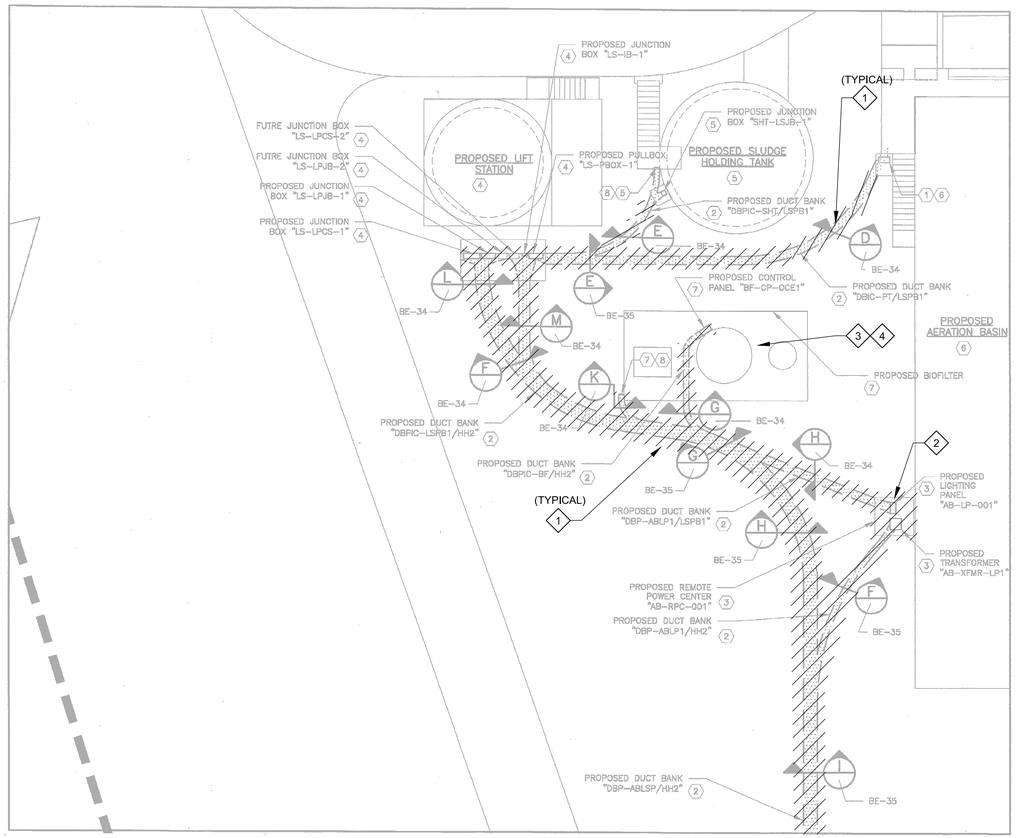

DETAIL 1 BE-2
SCALE: 1"=10'-0"

KEY NOTES:

1. PROPOSED PULLBOX "PT-PBOX-BS1" AND FLOW INDICATING TRANSMITTER "PT-FIT-300" MOUNTED ADJACENT. PROPOSED DUCT BANK "DBIC-PT/LSPB1" ROUTES TO CONNECT TO PROPOSED PULLBOX "PT-PBOX-BS1" AND FLOW INDICATING TRANSMITTER "PT-FIT-300". ALSO REFER TO CORRESPONDING FLOOR PLANS FOR ADDITIONAL INFORMATION.
2. SPACE AND ENCASE IN SAND PER THE DETAILS ON DRAWING NO. SE-8.
3. FURNISH AND INSTALL REMOTE POWER CENTER "AB-RPC-001" PER THE DETAILS ON DRAWING NO. SE-9. ALSO REFER TO ONE-LINE DRAWING NO. HE-9 FOR ADDITIONAL INFORMATION.
4. REFER TO THE LIFT STATION SERIES OF DRAWINGS FOR ADDITIONAL INFORMATION.
5. REFER TO THE SLUDGE THICKENER PLAN ON DRAWING NO. GE-1 FOR ADDITIONAL INFORMATION.
6. REFER TO THE AERATION BASIN SERIES OF DRAWINGS FOR ADDITIONAL INFORMATION.
7. REFER TO BIOFILTER PLAN DRAWING NO. IE-1 FOR ADDITIONAL INFORMATION.
8. DUCT BANK ROUTES TO CONNECT TO PROPOSED LIGHT FIXTURE LOCATED NEAR STRUCTURE. CLOSELY AND CAREFULLY COORDINATE ROUTE WITH CORRESPONDING FLOOR PLANS.

GENERAL NOTES:

1. EXTREME CARE MUST BE TAKEN FOR THE INSTALLATION OF THE ELECTRICAL DUCT BANKS SINCE THERE ARE NO AVAILABLE AS BUILT RECORDS OF PROFILES IDENTIFYING THE LOCATION AND INVERT ELEVATIONS OF EXISTING UNDERGROUND ELECTRICAL SYSTEM (CONDUITS, DUCT BANK, GROUNDING NETWORK, ETC.) AND UNDERGROUND MECHANICAL PIPING. ROUTING OF NEW DUCT BANK SHOWN IS BASED ON SCHEMATIC KNOWLEDGE OF THE SIZE OF MECHANICAL PIPING AND THEIR APPROXIMATE SIZE AND/OR LOCATION. NO DATA IS AVAILABLE PERTAINING TO EXISTING UNDERGROUND ELECTRICAL DUCT BANK SYSTEM AND ITS COORDINATION WITH THE UNDERGROUND MECHANICAL SYSTEM. THEREFORE THE CONTRACTOR IS TO EXERCISE EXTREME CARE, VERIFY LOCATION/ROUTING/ELEVATION OF EXISTING UNDERGROUND UTILITIES PRIOR TO COMMENCING FULL SCALE INSTALLATION PROCESS OF THE PROPOSED DUCT BANK SYSTEM. FOLLOWING THE DISCOVERY VERIFICATION OF EXISTING UNDERGROUND UTILITIES, SHOULD ADJUSTMENT/MODIFICATIONS BECOME A NECESSITY TO EITHER THE EXISTING OR PROPOSED SYSTEM (AS APPLICABLE), THE EXISTING DISCOVERED FIELD CONDITIONS MUST BE BROUGHT TO THE ENGINEER'S ATTENTION FOR EXECUTION OF THE NECESSARY ADJUSTMENTS/MODIFICATIONS.
2. PROPOSED ITEMS ARE SHOWN IN DARK LINEWORK. FUTURE ITEMS ARE SHOWN IN LIGHT LINEWORK, UNLESS NOTED OTHERWISE.
3. NOT ALL MANHOLES OR UNDERGROUND UTILITIES ARE SHOWN ON THIS DRAWING.
4. EXACT LOCATIONS OF MECHANICAL/STRUCTURAL/CIVIL COMPONENTS ARE NOT SHOWN ON THIS DRAWING. REFER TO MECHANICAL/STRUCTURAL/CIVIL DRAWINGS FOR EXACT LOCATIONS OF MECHANICAL/STRUCTURAL/CIVIL ITEMS.
5. NOT ALL ELECTRICAL/MECHANICAL/STRUCTURAL/CIVIL COMPONENTS ARE SHOWN ON THIS DRAWING. REFER TO ELECTRICAL/MECHANICAL/STRUCTURAL/CIVIL DRAWINGS, AS APPLICABLE, FOR ADDITIONAL INFORMATION.
6. CONTRACTOR SHALL CLOSELY AND CAREFULLY COORDINATE ROUTE OF PROPOSED CONDUIT/WIRE WITH EXISTING AND PROPOSED CIVIL/MECHANICAL/STRUCTURAL/ELECTRICAL SYSTEMS/COMPONENTS/EQUIPMENT/UTILITIES, ETC.
7. CONTRACTOR SHALL SIZE ALL PULL BOXES PER, AND IN ACCORDANCE WITH, THE REQUIREMENTS OF THE NATIONAL ELECTRICAL CODE (N.E.C.).
8. SPACE AND ENCASE ALL CONDUIT/DUCT BANK SYSTEM(S) IN SAND PER DETAILS ON DRAWING NO. SE-8.
9. ALSO REFER TO DUCT BANK PLAN AND PROFILE DRAWINGS, THE CIVIL/STRUCTURAL DRAWINGS, AND ELECTRICAL SITE DRAWINGS FOR ADDITIONAL INFORMATION AND/OR CONTINUATION OF PROPOSED CONDUIT/DUCT BANK SYSTEMS.
10. THE LOCATIONS AND SIZES OF EQUIPMENT SHOWN ARE APPROXIMATE. THE CONTRACTOR SHALL FIELD VERIFY CONDITIONS PRIOR TO COMMENCING CONSTRUCTION.

RECORD DRAWING
THIS CONSTRUCTION DOCUMENT WAS PREPARED USING INFORMATION SUPPLIED BY THE CONTRACTOR TO REPRESENT CONSTRUCTION CHANGES. THIS DOCUMENT IS FOR INFORMATION AND REFERENCE IN CONNECTION WITH THE OWNER'S USE AND OCCUPANCY OF THE PROJECT AND IS NOT INTENDED FOR BID, PERMIT OR CONSTRUCTION.
BY: K.A. Harutunian DATE: 1/5/2007

REUSE OF DOCUMENTS
This document and the ideas and designs incorporated herein as an instrument of professional service has been developed, designed and prepared by Harutunian Engineering, Inc. and is not to be used, in whole or part, for any other project without the written authorization of the City of Austin and Harutunian Engineering, Inc. © 2003

HARUTUNIAN ENGINEERING INCORPORATED
ENGINEERING AND ENVIRONMENTAL CONSULTANTS
305 EAST HUNTLAND DRIVE SUITE 500 AUSTIN, TEXAS 78752

NO.	DATE	REVISION	APPROV.
4			
3			
2			
1			

WARNING
0 1/2 1
IF THIS BAR DOES NOT MEASURE 1" THEN DRAWING IS NOT TO SCALE

K. A. HARUTUNIAN 59181 REGISTERED PROFESSIONAL ENGINEER STATE OF TEXAS
10/16/2003

CITY OF AUSTIN, TEXAS
NORTHEAST INTERIM WASTEWATER TREATMENT PLANT

ENLARGED SITE ELECTRICAL PLAN
(SHEET 1 OF 3)

Turner Collie & Braden Inc.
ENGINEERS • PLANNERS • PROJECT MANAGERS

Unit PUBLIC WORKS	Scale 1"=10'	Date OCTOBER 2003	
Designed HEI	Checked HEI	Job No. 052-122094-0008	
Drawn HEI	Approved HEI	Sheet 74/327	
Dwg. No. BE-31			

KEY NOTES

1. DEMOLISH UNDERGROUND DUCT BANKS IN THEIR ENTIRETY AS SHOWN IN HATCHED AREAS. IN VICINITY OF DEMOLITION, TAKE CARE TO AVOID DAMAGING OR COMPROMISING STRUCTURAL INTEGRITY OF ALL UNDERGROUND PIPES AND MANHOLES THAT ARE TO REMAIN. ALL DUCT BANK SIZES AND ROUTES ARE UNKNOWN. FIELD VERIFY ACTUAL CONDITIONS PRIOR TO COMMENCING DEMOLITION. COORDINATE WITH CIVIL/STRUCTURAL.
2. REFER TO DEMOLITION AERATION BASIN AREA DRAWINGS FOR ADDITIONAL INFORMATION.
3. ALTHOUGH NOT SHOWN HERE, THE MAGNESIUM HYDROXIDE SYSTEM IS LOCATED ON THIS EQUIPMENT PAD. DISCONNECT THE MAG TANK CONTROL PANEL, INSTRUMENTATION, AND PUMPING UNIT. THIS SYSTEM IS TO BE TEMPORARILY RELOCATED TO A PROPOSED EQUIPMENT PAD NORTH OF THE PROPOSED AERATION BASIN NO. 3 AND 4. REFER TO DRAWING NO. [05E23] AND THE MECHANICAL DRAWINGS FOR ADDITIONAL INFORMATION. TAKE DETAILED NOTES PRIOR TO DISCONNECTING MAGNESIUM HYDROXIDE SYSTEM IN ORDER THAT IT CAN BE RETURNED TO FULL WORKING CONDITION AFTER RELOCATION.
4. DISCONNECT AND REMOVE SLUDGE HOLDING TANK DECANT PUMP DISCONNECT SWITCH. DISCONNECT SWITCH IS LOCATED ON THE EQUIPMENT RACK WITH THE MAGNESIUM TANK CONTROL PANEL.

GENERAL NOTES:

1. NOT ALL DEMOLITION REQUIREMENTS ARE SHOWN ON THIS DRAWING. REFER TO DETAILED AREA DEMOLITION DRAWINGS FOR ADDITIONAL REQUIREMENTS AND INFORMATION.
2. REFER TO APPLICABLE AREA DEMOLITION DRAWINGS FOR ADDITIONAL REQUIREMENTS AND INFORMATION.

THIS CONFORMED DOCUMENT IS RELEASED FOR THE CONVENIENCE OF THE CONTRACTOR UNDER THE AUTHORITY OF:

K. A. Harutunian — 11-01-22
K. A. HARUTUNIAN, P.E. — DATE
TX LIC NO. 59181

SEE DISCLAIMER FOR LIMITATIONS OF USE.

CONTRACT DOCUMENTS DATED FEBRUARY 28, 2022, AS PART OF THE BIDDING DOCUMENTS (DRAWINGS AND SPECIFICATIONS) AND SUBSEQUENTLY ISSUED ADDENDA HAVE BEEN MERGED INTO ONE CONFORMING SET OF DOCUMENTS FOR THE CONVENIENCE OF THE CONTRACTOR. IF INCONSISTENCIES OR AMBIGUITIES BETWEEN "CONFORMED" DOCUMENTS AND CONTRACT DOCUMENTS ARE FOUND, THE CONTRACT DOCUMENTS SHALL GOVERN.

This document, and the designs incorporated herein, is an instrument of professional service that has been developed, designed and prepared by Harutunian Engineering, Inc., and is not to be used, in whole or in part, for any other project without giving written notice to Harutunian Engineering, Inc.

REV	DATE	BY	DESCRIPTION
			CONFORMED DOCUMENTS

DESIGNED HEI
DRAWN HEI
CHECKED HEI
DATE NOVEMBER 2022

** ORIGINAL SEALED BY K.A. HARUTUNIAN 02-28-22 TX PE 59181 **

HARUTUNIAN ENGINEERING INCORPORATED
ENGINEERING AND ENVIRONMENTAL CONSULTANTS
8100 CROSS PARK DRIVE AUSTIN, TEXAS 78754
TBPE REGISTRATION NO. F-2408

carollo®
TBPELS No. F-882

CITY OF AUSTIN FOUNDED 1839
CITY OF AUSTIN

CITY OF AUSTIN
WILD HORSE RANCH WWTP EXPANSION
DEMOLITION
SITE DUCT BANK
PLAN - DEMOLITION - 2

VERIFY SCALES
BAR IS ONE INCH ON ORIGINAL DRAWING
0 1"
IF NOT ONE INCH ON THIS SHEET, ADJUST SCALES ACCORDINGLY

JOB NO. 10976A.00
DRAWING NO. 05DE02
SHEET NO. 110 OF 464

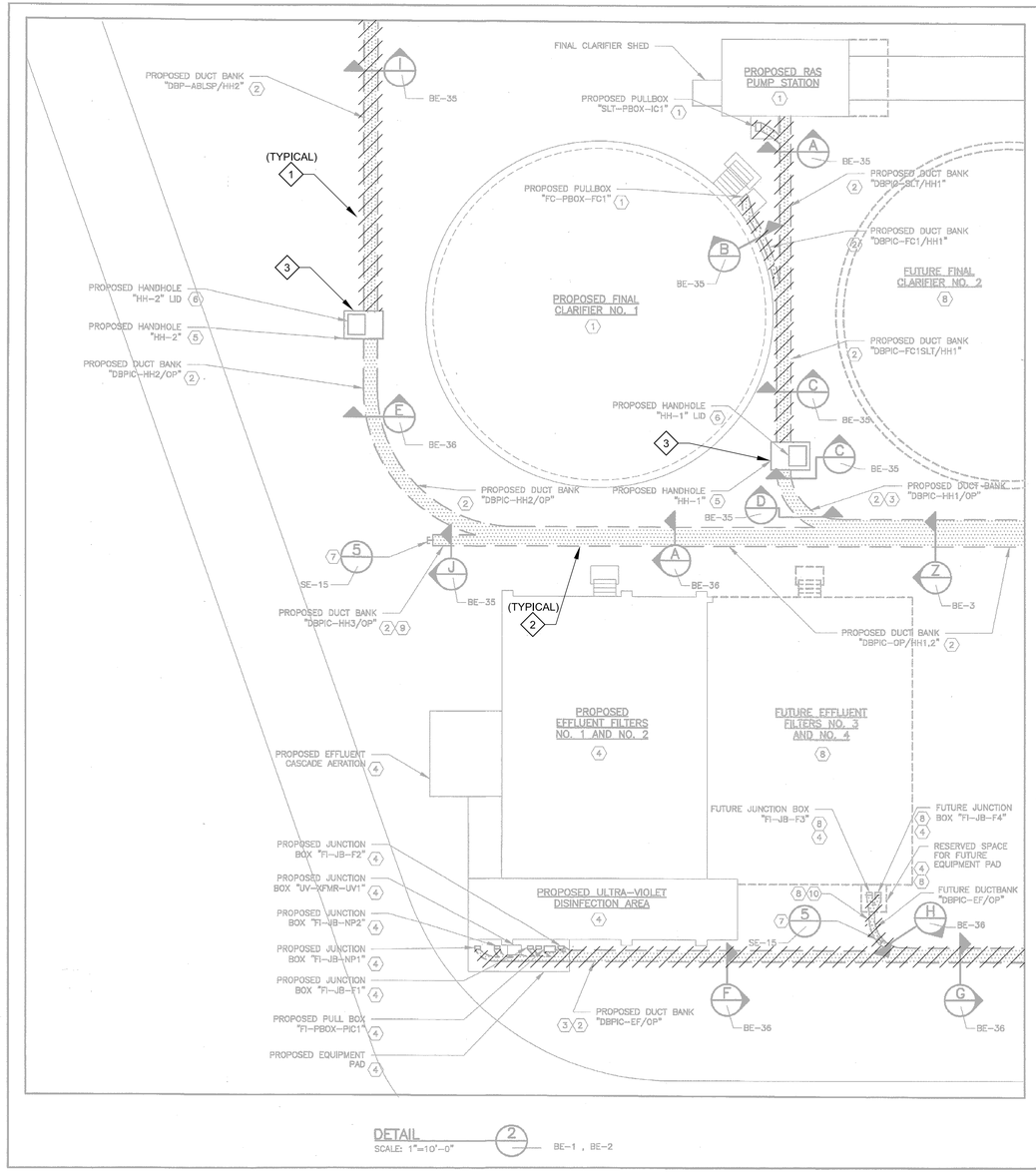

KEY NOTES:

1. REFER TO THE FINAL CLARIFIER / RAS PUMP STATION SERIES OF DRAWINGS FOR ADDITIONAL INFORMATION.
2. SPACE AND ENCASE IN SAND PER THE DETAILS ON DRAWING NO. SE–8.
3. DUCT BANK CONFIGURATION VARIES ALONG LENGTH OF DUCT BANK.
4. REFER TO THE EFFLUENT FILTER / ULTRA–VIOLET DISINFECTION SERIES OF DRAWINGS FOR ADDITIONAL INFORMATION.
5. FURNISH AND INSTALL HANDHOLE PER THE DETAILS ON DRAWING NO. SE–11 AND MAKE ALL FINAL CONNECTIONS. FURNISH AND INSTALL ADDITIONAL LENGTH OF HANDHOLE NECK AS NECESSARY TO ACCOMMODATE FOR DIFFERENCES IN ELEVATION BETWEEN THE HANDHOLE CHAMBER AND WITH FINISHED GRADE EXTERIOR TO HANDHOLE. CLOSELY AND CAREFULLY COORDINATE ELEVATION OF HANDHOLE WITH THE DUCT BANK ELEVATION AND THE DUCT BANK PLAN AND PROFILE DRAWINGS. ALSO REFER TO THE DUCT BANK PLAN AND PROFILE DRAWINGS, THE CIVIL/STRUCTURAL DRAWINGS, THE HANDHOLE DETAILS, AS APPLICABLE, FOR ADDITIONAL INFORMATION. ALSO REFER TO SITE GROUNDING DRAWING NO. EL–31 FOR ADDITIONAL INFORMATION.
6. CLOSELY AND CAREFULLY COORINDATE TRAFFIC RATING AND ORIENTATION OF HANDHOLE LID PER THE DETAILS ON DRAWING NO. SE–11. ALL HANDHOLE LIDS SHALL BE HEAVY TRAFFIC RATED. SLOPE THE EXTERIOR FINISHED GRADE ABOUT HANDHOLE LID SUCH TO FACILITATE DRAINAGE AWAY FROM HANDHOLE LID. TAG HANDHOLE LID PER SPECIFICATIONS. ALSO REFER TO THE DUCT BANK PLAN AND PROFILE DRAWINGS, THE CIVIL/STRUCTURAL DRAWINGS, THE HANDHOLE DETAILS, AS APPLICABLE, FOR ADDITIONAL INFORMATION.
7. STUB–OUT AND CAP–OFF CONDUITS FOR FUTURE USE PER THE DETAILS ON DRAWING NO. SE–15. THE DUCT BANK WILL BE EXTENDED IN THE FUTURE BY OTHERS.
8. FURNISHED AND INSTALLED BY OTHERS.
9. THE DUCT BANK SHALL BE EXTENDED BEYOND THAT SHOWN HERE IN THE FUTURE BY OTHERS TO CONNECT TO THE FUTURE BELT PRESS FACILITY. THE FUTURE BELT PRESS FACILITY IS NOT SHOWN HERE.
10. THE DUCT BANK "DBPIC–EF/OP" SHALL BE EXTENDED IN THE FUTURE BY OTHERS TO CONNECT TO THE FUTURE EFFLUENT FILTERS "FI–F–003" AND "FI–F–004".

GENERAL NOTES:

1. EXTREME CARE MUST BE TAKEN FOR THE INSTALLATION OF THE ELECTRICAL DUCT BANKS SINCE THERE ARE NO AVAILABLE AS BUILT RECORDS OF PROFILES IDENTIFYING THE LOCATION AND INVERT ELEVATIONS OF EXISTING UNDERGROUND ELECTRICAL SYSTEM (CONDUITS, DUCT BANK, GROUNDING NETWORK, ETC.) AND UNDERGROUND MECHANICAL PIPING. ROUTING OF NEW DUCT BANK SHOWN IS BASED ON SCHEMATIC KNOWLEDGE OF THE SIZE OF MECHANICAL PIPING AND THEIR APPROXIMATE SIZE AND/OR LOCATION. NO DATA IS AWILABLE PERTAINING TO EXISTING UNDERGROUND ELECTRICAL DUCT BANK SYSTEM AND ITS COORDINATION WITH THE UNDERGROUND MECHANICAL SYSTEM. THEREFORE THE CONTRACTOR IS TO EXERCISE EXTREME CARE, VERIFY LOCATION/ROUTING/ELEVATION OF EXISTING UNDERGROUND UTILITIES PRIOR TO COMMENCING FULL SCALE INSTALLATION PROCESS OF THE PROPOSED DUCT BANK SYSTEM. FOLLOWING THE DISCOVERY VERIFICATION OF EXISTING UNDERGROUND UTILITIES, SHOULD ADJUSTMENT/MODIFICATIONS BECOME A NECESSITY TO EITHER THE EXISTING OR PROPOSED SYSTEM (AS APPLICABLE), THE EXISTING DISCOVERED FIELD CONDITIONS MUST BE BROUGHT TO THE ENGINEER'S ATTENTION FOR EXECUTION OF THE NECESSARY ADJUSTMENTS/MODIFICATIONS.
2. PROPOSED ITEMS ARE SHOWN IN DARK LINEWORK. FUTURE ITEMS ARE SHOWN IN LIGHT LINEWORK, UNLESS NOTED OTHERWISE.
3. NOT ALL MANHOLES OR UNDERGROUND UTILITIES ARE SHOWN ON THIS DRAWING.
4. EXACT LOCATIONS OF MECHANICAL/STRUCTURAL/CIVIL COMPONENTS ARE NOT SHOWN ON THIS DRAWING. REFER TO MECHANICAL/STRUCTURAL/CIVIL DRAWINGS FOR EXACT LOCATIONS OF MECHANICAL/STRUCTURAL/CIVIL ITEMS.
5. NOT ALL ELECTRICAL/MECHANICAL/STRUCTURAL/CIVIL COMPONENTS ARE SHOWN ON THIS DRAWING. REFER TO ELECTRICAL/MECHANICAL/STRUCTURAL/CIVIL DRAWINGS, AS APPLICABLE, FOR ADDITIONAL INFORMATION.
6. CONTRACTOR SHALL CLOSELY AND CAREFULLY COORDINATE ROUTE OF PROPOSED CONDUIT/WIRE WITH EXISTING AND PROPOSED CIVIL/MECHANICAL/STRUCTURAL/ELECTRICAL SYSTEMS/COMPONENTS/EQUIPMENT/UTILITIES, ETC.
7. CONTRACTOR SHALL SIZE ALL PULL BOXES PER, AND IN ACCORDANCE WITH, THE REQUIREMENTS OF THE NATIONAL ELECTRICAL CODE (N.E.C.).
8. SPACE AND ENCASE ALL CONDUIT/DUCT BANK SYSTEM(S) IN SAND PER DETAILS ON DRAWING NO. SE–8.
9. ALSO REFER TO DUCT BANK PLAN AND PROFILE DRAWINGS, THE CIVIL/STRUCTURAL DRAWINGS, AND ELECTRICAL SITE DRAWINGS FOR ADDITIONAL INFORMATION AND/OR CONTINUATION OF PROPOSED CONDUIT/DUCT BANK SYSTEMS.
10. THE LOCATIONS AND SIZES OF EQUIPMENT SHOWN ARE APPROXIMATE. THE CONTRACTOR SHALL FIELD VERIFY CONDITIONS PRIOR TO COMMENCING CONSTRUCTION.

KEY NOTES

1. DEMOLISH UNDERGROUND DUCT BANKS IN THEIR ENTIRETY AS SHOWN IN HATCHED AREAS. IN VICINITY OF DEMOLITION, TAKE CARE TO AVOID DAMAGING OR COMPROMISING STRUCTURAL INTEGRITY OF ALL UNDERGROUND PIPES AND MANHOLES THAT ARE TO REMAIN. ALL DUCT BANK SIZES AND ROUTES ARE UNKNOWN. FIELD VERIFY ACTUAL CONDITIONS PRIOR TO COMMENCING DEMOLITION. COORDINATE WITH CIVIL/STRUCTURAL.
2. EXISTING UNDERGROUND DUCT BANK SHALL BE REMAIN AND BE REUSED DURING RENOVATION ACTIVITIES.
3. EXISTING MANHOLE SHALL BE REMAIN AND BE REUSED DURING RENOVATION ACTIVITIES.

GENERAL NOTES:

1. NOT ALL DEMOLITION REQUIREMENTS ARE SHOWN ON THIS DRAWING. REFER TO DETAILED AREA DEMOLITION DRAWINGS FOR ADDITIONAL REQUIREMENTS AND INFORMATION.
2. REFER TO APPLICABLE AREA DEMOLITION DRAWINGS FOR ADDITIONAL REQUIREMENTS AND INFORMATION.
3. REFER TO RENOVATION PLAN DRAWINGS FOR ADDITIONAL INFORMATION.

RECORD DRAWING
THIS CONSTRUCTION DOCUMENT WAS PREPARED USING INFORMATION SUPPLIED BY THE CONTRACTOR TO REPRESENT CONSTRUCTION CHANGES. THIS DOCUMENT IS FOR INFORMATION AND REFERENCE IN CONNECTION WITH THE OWNER'S USE AND OCCUPANCY OF THE PROJECT" AND IS NOT INTENDED FOR BID, PERMIT OR CONSTRUCTION.
BY: K.A. Harutunian DATE: 1/5/2007

REUSE OF DOCUMENTS
This document and the ideas and designs incorporated herein as an instrument of professional service has been developed, designed and prepared by Harutunian Engineering, Inc. and is not to be used, in whole or part, for any other project without the written authorization of the City of Austin and Harutunian Engineering, Inc. © 2003

HARUTUNIAN ENGINEERING INCORPORATED
ENGINEERING AND ENVIRONMENTAL CONSULTANTS
303 EAST RIVERLAND DRIVE SUITE 600 AUSTIN, TEXAS 78752

NO.	DATE	REVISION	APPROV.
4			
3			
2			
1			

PLANT GRID NORTH
STATE PLANE GRID NORTH
SCALE: 1" = 10'–0"

WARNING
0 1/2 1
IF THIS BAR DOES NOT MEASURE 1" THEN DRAWING IS NOT TO SCALE

K. A. HARUTUNIAN 79181 REGISTERED PROFESSIONAL ENGINEER 01/01/2005

CITY OF AUSTIN, TEXAS
NORTHEAST INTERIM WASTEWATER TREATMENT PLANT
ENLARGED SITE ELECTRICAL PLAN (SHEET 2 OF 3)
Turner Collie & Braden Inc.
ENGINEERS • PLANNERS • PROJECT MANAGERS

Unit: PUBLIC WORKS	Scale: 1"=10'	Date: OCTOBER 2003	
Designed: HEI	Checked: HEI	Job No.: 052–122094–0008	
Drawn: HEI	Approved: HEI	Sheet: 75/327	
Dwg. No.: BE–32			

THIS CONFORMED DOCUMENT IS RELEASED FOR THE CONVENIENCE OF THE CONTRACTOR UNDER THE AUTHORITY OF:

K. A. HARUTUNIAN, P.E. 11-01-22
TX LIC NO. 59181 DATE

SEE DISCLAIMER FOR LIMITATIONS OF USE.

CONTRACT DOCUMENTS DATED FEBRUARY 28, 2022, AS PART OF THE BIDDING DOCUMENTS (DRAWINGS AND SPECIFICATIONS) AND SUBSEQUENTLY ISSUED ADDENDA HAVE BEEN MERGED INTO ONE CONFORMING SET OF DOCUMENTS FOR THE CONVENIENCE OF THE CONTRACTOR. IF INCONSISTENCIES OR AMBIGUITIES BETWEEN "CONFORMED" DOCUMENTS AND CONTRACT DOCUMENTS ARE FOUND, THE CONTRACT DOCUMENTS SHALL GOVERN.

This document, and the designs incorporated herein, is an instrument of professional service that has been developed, designed and prepared by Harutunian Engineering, Inc., and is not to be used, in whole or in part, for any other project without giving written notice to Harutunian Engineering, Inc.

REV	DATE	BY	DESCRIPTION
			CONFORMED DOCUMENTS

DESIGNED HEI
DRAWN HEI
CHECKED HEI
DATE NOVEMBER 2022

** ORIGINAL SEALED BY K.A. HARUTUNIAN 02-28-22 TX PE 59181 **

HARUTUNIAN ENGINEERING INCORPORATED
ENGINEERING AND ENVIRONMENTAL CONSULTANTS
8100 CROSS PARK DRIVE AUSTIN, TEXAS 78754
TBPE REGISTRATION NO. F-2408

carollo
TBPELS No. F-882

CITY OF AUSTIN FOUNDED 1839
CITY OF AUSTIN

CITY OF AUSTIN
WILD HORSE RANCH WWTP EXPANSION
DEMOLITION
SITE DUCT BANK PLAN - DEMOLITION - 3

VERIFY SCALES
BAR IS ONE INCH ON ORIGINAL DRAWING
0 1"
IF NOT ONE INCH ON THIS SHEET, ADJUST SCALES ACCORDINGLY

JOB NO. 10976A.00
DRAWING NO. 05DE03
SHEET NO. 111 OF 464

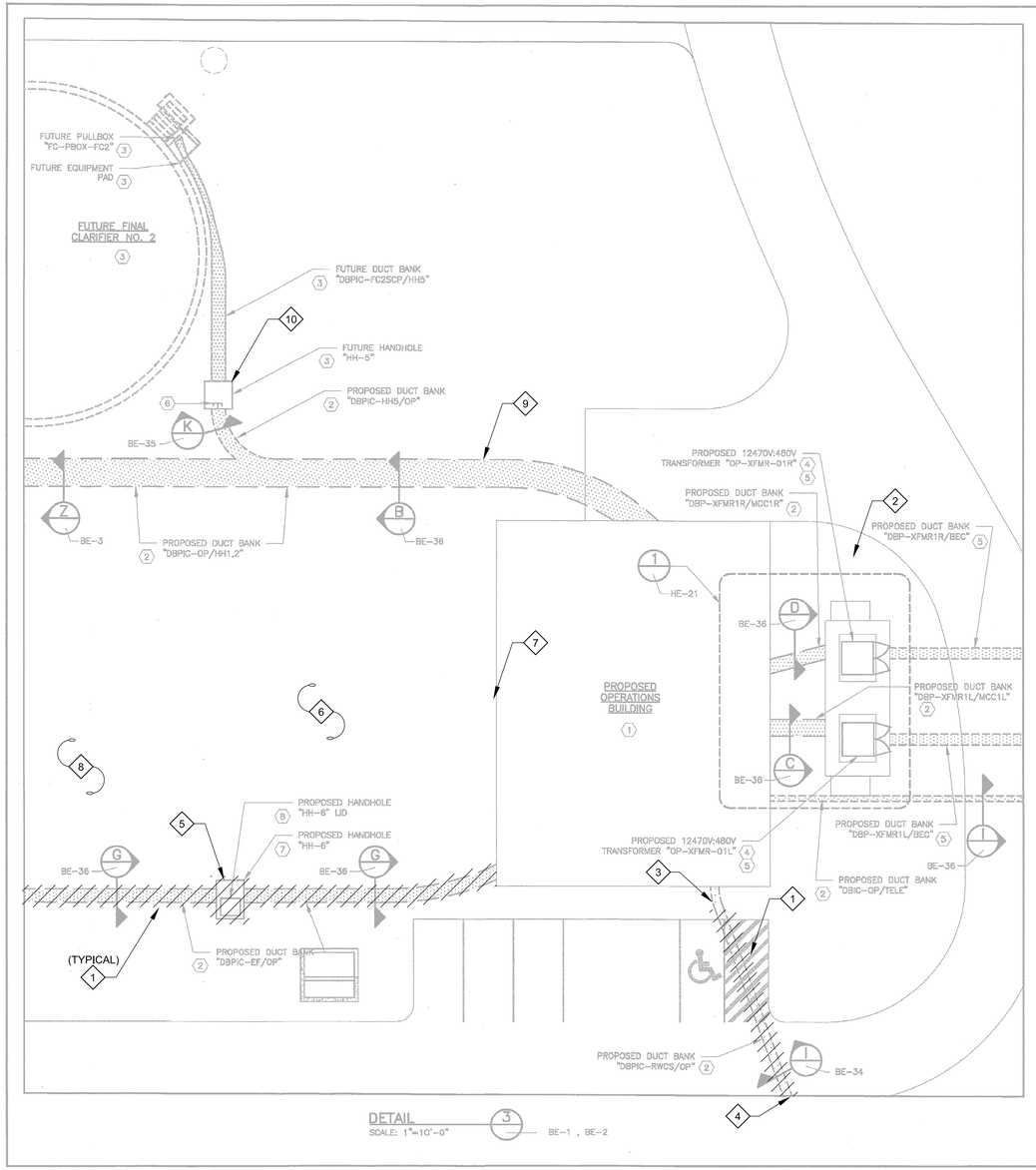

KEY NOTES:

1. REFER TO THE OPERATIONS BUILDING SERIES OF DRAWINGS FOR ADDITIONAL INFORMATION.
2. SPACE AND ENCASE IN SAND PER THE DETAILS ON DRAWING NO. SE-8.
3. FURNISHED AND INSTALLED BY OTHERS.
4. REFER TO DRAWING NO. HE-21 FOR ADDITIONAL INFORMATION.
5. FURNISHED AND INSTALLED BY BLUEBONNET ELECTRIC COOPERATIVE (BEC). THE 12470V SERVICE FEEDER CABLES, CORRESPONDING CONDUIT/DUCT BANK DEDICATED TO THE 12470V SERVICE FEEDER CABLES, 12470V RISER POLES, 12470V OVERHEAD (EXPOSED) CONDUCTORS, 12470V:480V TRANSFORMERS "OP-XFMR-01L" AND "OP-XFMR-01R" SHALL BE SIZED, FURNISHED, AND INSTALLED BY BEC. THE LOCATION/ROUTING OF ALL EXISTING AND PROPOSED EXPOSED 12470V SYSTEMS AND PROPOSED UNDERGROUND 12470V SYSTEMS FURNISHED AND INSTALLED BY BEC SHOWN HERE ARE APPROXIMATE. CLOSELY AND CAREFULLY COORDINATE LOCATION/ROUTING OF ALL EXPOSED SYSTEMS AND ALL UNDERGROUND DUCT BANK SYSTEMS WITH BEC PRIOR TO COMMENCING FULL SCALE INSTALLATION ACTIVITIES AND MAKE ALL FINAL CONNECTIONS. FOR ADDITIONAL INFORMATION RELATED TO THE PROPOSED ELECTRICAL SERVICE, REFER TO THE OVERALL ONE-LINE DRAWING NO. HE-1 AND ENLARGED SERVICE TRANSFORMER AREA PLAN ON DRAWING NO. HE-21. PROPOSED DUCT BANK "DBIC-OP/TELE" IS NOT FURNISHED AND INSTALLED BY BEC.
6. STUB-OUT AND CAP-OFF PROPOSED CONDUITS FOR FUTURE USE PER THE DETAILS ON DRAWING NO. SE-15. THE DUCT BANK SHALL BE EXTENDED IN THE FUTURE BY OTHERS FOR CONNECTION TO FUTURE FINAL CLARIFIER NO. 2 AND FUTURE SCUM PUMP.
7. FURNISH AND INSTALL HANDHOLE PER THE DETAILS ON DRAWING NO. SE-11 AND MAKE ALL FINAL CONNECTIONS. FURNISH AND INSTALL ADDITIONAL LENGTH OF HANDHOLE NECK AS NECESSARY TO ACCOMMODATE FOR DIFFERENCES IN ELEVATION BETWEEN THE HANDHOLE CHAMBER AND WITH FINISHED GRADE EXTERIOR TO HANDHOLE. CLOSELY AND CAREFULLY COORDINATE ELEVATION OF HANDHOLE WITH THE DUCT BANK ELEVATION AND THE DUCT BANK PLAN AND PROFILE DRAWINGS. ALSO REFER TO THE DUCT BANK PLAN AND PROFILE DRAWINGS, THE CIVIL/STRUCTURAL DRAWINGS, THE HANDHOLE DETAILS, AS APPLICABLE, FOR ADDITIONAL INFORMATION. ALSO REFER TO SITE GROUNDING DRAWING NO. BL-31 FOR ADDITIONAL INFORMATION.
8. CLOSELY AND CAREFULLY COORINDATE TRAFFIC RATING AND ORIENTATION OF HANDHOLE LID PER THE DETAILS ON DRAWING NO. SE-11. ALL HANDHOLE LIDS SHALL BE HEAVY TRAFFIC RATED. SLOPE THE EXTERIOR FINISHED GRADE ABOUT HANDHOLE LID SUCH TO FACILITATE DRAINAGE AWAY FROM HANDHOLE LID. TAG HANDHOLE LID PER SPECIFICATIONS. ALSO REFER TO THE DUCT BANK PLAN AND PROFILE DRAWINGS, THE CIVIL/STRUCTURAL DRAWINGS, THE HANDHOLE DETAILS, AS APPLICABLE, FOR ADDITIONAL INFORMATION.

GENERAL NOTES:

1. EXTREME CARE MUST BE TAKEN FOR THE INSTALLATION OF THE ELECTRICAL DUCT BANKS SINCE THERE ARE NO AVAILABLE AS BUILT RECORDS OF PROFILES IDENTIFYING THE LOCATION AND INVERT ELEVATIONS OF EXISTING UNDERGROUND ELECTRICAL SYSTEM (CONDUITS, DUCT BANK, GROUNDING NETWORK, ETC.) AND UNDERGROUND MECHANICAL PIPING. ROUTING OF NEW DUCT BANK SHOWN IS BASED ON SCHEMATIC KNOWLEDGE OF THE SIZE OF MECHANICAL PIPING AND THEIR APPROXIMATE SIZE AND/OR LOCATION. NO DATA IS AVAILABLE PERTAINING TO EXISTING UNDERGROUND ELECTRICAL DUCT BANK SYSTEM AND ITS COORDINATION WITH THE UNDERGROUND MECHANICAL SYSTEM. THEREFORE THE CONTRACTOR IS TO EXERCISE EXTREME CARE, VERIFY LOCATION/ROUTING/ELEVATION OF EXISTING UNDERGROUND UTILITIES PRIOR TO COMMENCING FULL SCALE INSTALLATION PROCESS OF THE PROPOSED DUCT BANK SYSTEM. FOLLOWING THE DISCOVERY VERIFICATION OF EXISTING UNDERGROUND UTILITIES, SHOULD ADJUSTMENT/MODIFICATIONS BECOME A NECESSITY TO EITHER THE EXISTING OR PROPOSED SYSTEM (AS APPLICABLE), THE EXISTING DISCOVERED FIELD CONDITIONS MUST BE BROUGHT TO THE ENGINEER'S ATTENTION FOR EXECUTION OF THE NECESSARY ADJUSTMENTS/MODIFICATIONS.
2. PROPOSED ITEMS ARE SHOWN IN DARK LINEWORK. FUTURE ITEMS ARE SHOWN IN LIGHT LINEWORK, UNLESS NOTED OTHERWISE.
3. NOT ALL MANHOLES OR UNDERGROUND UTILITIES ARE SHOWN ON THIS DRAWING.
4. EXACT LOCATIONS OF MECHANICAL/STRUCTURAL/CIVIL COMPONENTS ARE NOT SHOWN ON THIS DRAWING. REFER TO MECHANICAL/STRUCTURAL/CIVIL DRAWINGS FOR EXACT LOCATIONS OF MECHANICAL/STRUCTURAL/CIVIL ITEMS.
5. NOT ALL ELECTRICAL/MECHANICAL/STRUCTURAL/CIVIL COMPONENTS ARE SHOWN ON THIS DRAWING. REFER TO ELECTRICAL/MECHANICAL/STRUCTURAL/CIVIL DRAWINGS, AS APPLICABLE, FOR ADDITIONAL INFORMATION.
6. CONTRACTOR SHALL CLOSELY AND CAREFULLY COORDINATE ROUTE OF PROPOSED CONDUIT/WIRE WITH EXISTING AND PROPOSED CIVIL/MECHANICAL/STRUCTURAL/ELECTRICAL SYSTEMS/COMPONENTS/EQUIPMENT/UTILITIES, ETC.
7. CONTRACTOR SHALL SIZE ALL PULL BOXES PER, AND IN ACCORDANCE WITH, THE REQUIREMENTS OF THE NATIONAL ELECTRICAL CODE (N.E.C.).
8. SPACE AND ENCASE ALL CONDUIT/DUCT BANK SYSTEM(S) IN SAND PER DETAILS ON DRAWING NO. SE-8.
9. ALSO REFER TO DUCT BANK PLAN AND PROFILE DRAWINGS, THE CIVIL/STRUCTURAL DRAWINGS, AND ELECTRICAL SITE DRAWINGS FOR ADDITIONAL INFORMATION AND/OR CONTINUATION OF PROPOSED CONDUIT/DUCT BANK SYSTEMS.
10. THE LOCATIONS AND SIZES OF EQUIPMENT SHOWN ARE APPROXIMATE. THE CONTRACTOR SHALL FIELD VERIFY CONDITIONS PRIOR TO COMMENCING CONSTRUCTION.

RECORD DRAWING
THIS CONSTRUCTION DOCUMENT WAS PREPARED USING INFORMATION SUPPLIED BY THE CONTRACTOR TO REPRESENT CONSTRUCTION CHANGES. THIS DOCUMENT IS FOR INFORMATION AND REFERENCE IN CONNECTION WITH THE OWNER'S USE AND OCCUPANCY OF THE PROJECT AND IS NOT INTENDED FOR BID, PERMIT OR CONSTRUCTION.
BY: K.A. Harutunian DATE: 1/6/2007

REUSE OF DOCUMENTS
This document and the ideas and designs incorporated herein as an instrument of professional service has been developed, designed and prepared by Harutunian Engineering, Inc. and is not to be used, in whole or part, for any other project without the written authorization of the City of Austin and Harutunian Engineering, Inc. © 2003

HARUTUNIAN ENGINEERING INCORPORATED
ENGINEERING AND ENVIRONMENTAL CONSULTANTS
305 EAST HANDAND DRIVE SUITE 600 AUSTIN, TEXAS 78752

NO.	DATE	REVISION	APPROV.
4			
3			
2			
1			

PLANT GRID NORTH
STATE PLANE GRID NORTH
SCALE: 1" = 10'-0"

WARNING
0 1/2 1
IF THIS BAR DOES NOT MEASURE 1" THEN DRAWING IS NOT TO SCALE

K. A. HARUTUNIAN 59181 REGISTERED PROFESSIONAL ENGINEER 10/7/2003

CITY OF AUSTIN, TEXAS
NORTHEAST INTERIM WASTEWATER TREATMENT PLANT
ENLARGED SITE ELECTRICAL PLAN (SHEET 3 OF 3)

Turner Collie & Braden Inc.
ENGINEERS • PLANNERS • PROJECT MANAGERS

Unit PUBLIC WORKS	Scale 1"=10'	Date OCTOBER 2003	
Designed HEI	Checked HEI	Job No. 052-122094-0008	
Drawn HEI	Approved HEI	Sheet 76/327	
Dwg. No. BE-33			

KEY NOTES

1. DEMOLISH UNDERGROUND DUCT BANKS IN THEIR ENTIRETY AS SHOWN IN HATCHED AREAS. IN VICINITY OF DEMOLITION, TAKE CARE TO AVOID DAMAGING OR COMPROMISING STRUCTURAL INTEGRITY OF ALL UNDERGROUND PIPES AND MANHOLES THAT ARE TO REMAIN. ALL DUCT BANK SIZES AND ROUTES ARE UNKNOWN. FIELD VERIFY ACTUAL CONDITIONS PRIOR TO COMMENCING DEMOLITION. COORDINATE WITH CIVIL/STRUCTURAL.
2. THERE IS AN EXISTING GENERATOR "OP-GEN-01" IN THIS LOCATION WHICH SHALL REMAIN AND BE REUSED DURING RENOVATION ACTIVITIES.
3. CUT UNDERGROUND DUCT BANK AT THIS LOCATION. CAP CONDUITS PER DETAIL E944/[00TE11]. CONTRACTOR SHALL BE AWARE THAT A PROPOSED UNDERGROUND MECHANICAL PIPE SHALL BE ROUTING UNDERNEATH THE ROADWAY WITHIN THE VICINITY OF THIS EXISTING UNDERGROUND DUCT BANK. COORDINATE WITH MECHANICAL PRIOR TO COMMENCING DEMOLITION OR RENOVATION ACTIVITIES.
4. REFER TO DEMOLITION SITE PLAN DRAWING [05DE01] FOR CONTINUATION OF EXISTING UNDERGROUND DUCT BANK AND ADDITIONAL INFORMATION.
5. DEMOLISH EXISTING MANHOLE INCLUDING EXISTING CONDUIT AND CONDUCTORS IN THEIR ENTIRETY WHETHER OR NOT SHOWN ON THESE RECORD DRAWINGS, UNLESS OTHERWISE NOTED. CONTRACTOR SHALL FIELD VERIFY PRIOR TO COMMENCING DEMOLITION ACTIVITIES. ALSO COORDINATE WITH MECHANICAL/CIVIL AND REFER TO STRUCTURAL/CIVIL DEMOLITION DRAWINGS FOR ADDITIONAL INFORMATION.
6. DEMOLISH EXISTING UNDERGROUND DUCT BANK SYSTEM, NOT SHOWN ON THIS RECORD DRAWING, WHICH ROUTES FROM A PULLBOX MOUNTED ON THE SOUTH WALL OF THE OPERATIONS BUILDING TO THE TEMPORARY FILTERS IN ITS ENTIRETY. ROUTE OF UNDERGROUND DUCT BANK SYSTEM IS UNKNOWN. REFER TO OPERATIONS BUILDING DEMOLITION DRAWINGS FOR APPROXIMATE LOCATION OF TEMPORARY PULLBOX AND ADDITIONAL INFORMATION. ALSO, REFER TO DEMOLITION TEMPORARY FILTER SYSTEM DRAWINGS FOR ADDITIONAL INFORMATION.
7. APPROXIMATE LOCATION OF PULLBOX MOUNTED ON THE WALL OF THE OPERATIONS BUILDING. CONTRACTOR SHALL FIELD VERIFY EXISTING CONDITIONS PRIOR TO COMMENCING DEMOLITION ACTIVITIES. REFER TO DEMOLITION PLAN DRAWING [80DE17] FOR ADDITIONAL INFORMATION.
8. DEMOLISH TEMPORARY FILTER SYSTEM ELECTRICAL, INSTRUMENTATION AND CONTROLS EQUIPMENT, NOT SHOWN ON IHS DRAWING, IN ITS ENTIRETY. REFER TO TEMPORARY FILTER SYSTEM AREA DEMOLITION DRAWING NO. [05E22] FOR ADDITIONAL INFORMATION. TAKE CAREFUL NOTES TO RESTORE CONTROL FUNCTIONALITY DURING TEMPORARY SERVICE.
9. EXISTING UNDERGROUND DUCT BANK SHALL BE REMAIN AND BE REUSED DURING RENOVATION ACTIVITIES.
10. EXISTING MANHOLE SHALL BE REMAIN AND BE REUSED DURING RENOVATION ACTIVITIES.

GENERAL NOTES:

1. NOT ALL DEMOLITION REQUIREMENTS ARE SHOWN ON THIS DRAWING. REFER TO DETAILED AREA DEMOLITION DRAWINGS FOR ADDITIONAL REQUIREMENTS AND INFORMATION.
2. REFER TO APPLICABLE AREA DEMOLITION DRAWINGS FOR ADDITIONAL REQUIREMENTS AND INFORMATION.

THIS CONFORMED DOCUMENT IS RELEASED FOR THE CONVENIENCE OF THE CONTRACTOR UNDER THE AUTHORITY OF:

K. A. HARUTUNIAN, P.E. — 11-01-22 DATE
TX LIC NO. 59181

SEE DISCLAIMER FOR LIMITATIONS OF USE.

CONTRACT DOCUMENTS DATED FEBRUARY 28, 2022, AS PART OF THE BIDDING DOCUMENTS (DRAWINGS AND SPECIFICATIONS) AND SUBSEQUENTLY ISSUED ADDENDA HAVE BEEN MERGED INTO ONE CONFORMING SET OF DOCUMENTS FOR THE CONVENIENCE OF THE CONTRACTOR. IF INCONSISTENCIES OR AMBIGUITIES BETWEEN "CONFORMED" DOCUMENTS AND CONTRACT DOCUMENTS ARE FOUND, THE CONTRACT DOCUMENTS SHALL GOVERN.

This document, and the designs incorporated herein, is an instrument of professional service that has been developed, designed and prepared by Harutunian Engineering, Inc., and is not to be used, in whole or in part, for any other project without giving written notice to Harutunian Engineering, Inc.

REV	DATE	BY	DESCRIPTION
			CONFORMED DOCUMENTS

DESIGNED HEI
DRAWN HEI
CHECKED HEI
DATE NOVEMBER 2022

** ORIGINAL SEALED BY K.A. HARUTUNIAN 02-28-22 TX PE 59181 **

HARUTUNIAN ENGINEERING INCORPORATED
ENGINEERING AND ENVIRONMENTAL CONSULTANTS
8100 CROSS PARK DRIVE AUSTIN, TEXAS 78754
TBPE REGISTRATION NO. F-2408

carollo® TBPELS No. F-882

CITY OF AUSTIN — FOUNDED 1839

CITY OF AUSTIN

CITY OF AUSTIN
WILD HORSE RANCH WWTP EXPANSION
DEMOLITION
SITE DUCT BANK PLAN - DEMOLITION - 4

VERIFY SCALES
BAR IS ONE INCH ON ORIGINAL DRAWING
0 1"
IF NOT ONE INCH ON THIS SHEET, ADJUST SCALES ACCORDINGLY

JOB NO. 10976A.00
DRAWING NO. 05DE04
SHEET NO. 112 OF 464

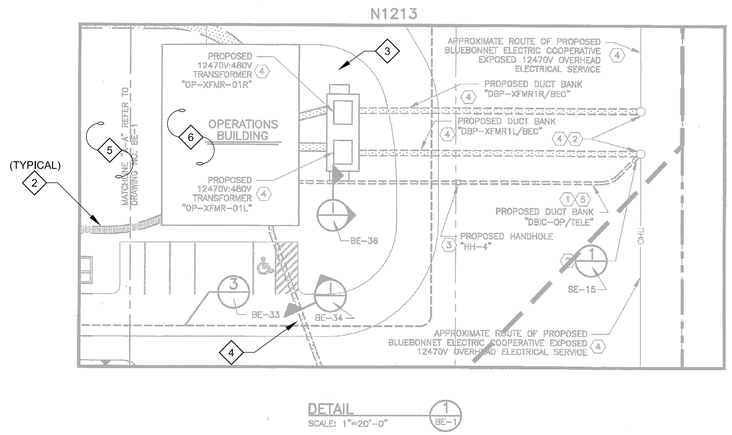

DETAIL 1/BE-1
SCALE: 1"=20'-0"

CONDUIT/DUCT BANK SECTION DIMENSION TABLE

LEGEND:

NOTE: DIMENSIONS SHOWN ON TABLE ARE MAXIMUM DIMENSIONS IN INCHES.

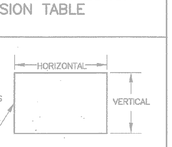

SECTION IDENTIFIER	HORIZONTAL (INCHES)	VERTICAL (INCHES)
Z	60"	42"

NOTE: REFER TO "CONDUIT/DUCT BANK SECTION DIMENSION TABLE" ON THIS DRAWING FOR MAXIMUM DIMENSIONS OF THE CONDUIT/DUCT BANK SECTIONS ON THIS DRAWING.

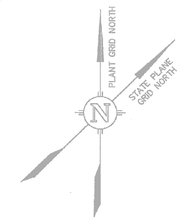

LEGEND

- PROPERTY LIMITS
- PROJECT SHEET GRID
- CONSTRUCTION LIMITS
- PHASE I
- PHASE II (NOT IN THIS CONTRACT)

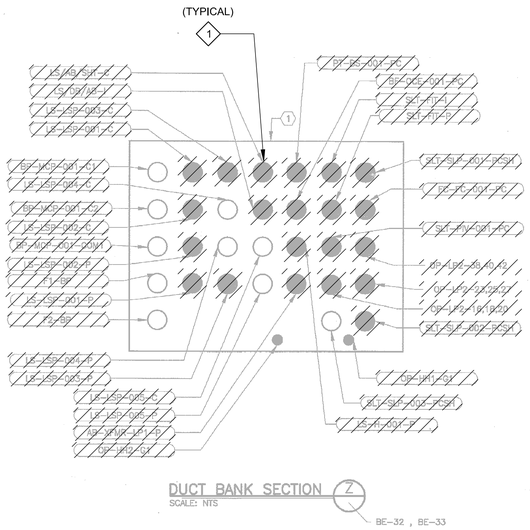

DUCT BANK SECTION Z/-
SCALE: NTS

KEY NOTES:

1. SPACE AND ENCASE IN SAND PER THE DETAILS ON DRAWING NO. SE-8.
2. APPROXIMATE LOCATION OF A PROPOSED 12470V BLUEBONNET ELECTRIC COOPERATIVE ELECTRICAL SERVICE RISER POLE. ACTUAL LOCATION MAY VARY. CLOSELY AND CAREFULLY COORDINATE ACTUAL LOCATION WITH BLUEBONNET ELECTRIC COOPERATIVE. STUB-UP AND CAP-OFF PROPOSED DEDICATED TELEPHONE SYSTEM CONDUIT(S) AT PROPOSED BLUEBONNET ELECTRIC COOPERATIVE 12470V ELECTRICAL SERVICE RISER POLE FOR CONNECTION TO TELEPHONE SYSTEM PER THE DETAILS ON DRAWING NO. SE-15. THE PROPOSED TELEPHONE JUNCTION BOX "OP-JB-1MCP1" WILL BE FURNISHED AND INSTALLED TO THE ELECTRICAL SERVICE RISER POLE BY THE SERVING TELEPHONE UTILITY, SOUTHWESTERN BELL. CLOSELY AND CAREFULLY COORDINATE ALL TELEPHONE SYSTEM REQUIREMENTS WITH SOUTHWESTERN BELL AND THE OWNER AND MAKE ALL FINAL CONNECTIONS TO THE SATISFACTION OF THE OWNER AT NO ADDITIONAL COST TO THE OWNER. ALSO REFER TO KEYNOTE SEVEN ON DRAWING NO. R1-9 FOR ADDITIONAL INFORMATION.
3. FURNISH AND INSTALL HANDHOLE SIMILAR TO LIGHTING FIXTURE CIRCUITING JUNCTION BOX DETAILS ON DRAWING NO. SE-10.
4. FURNISHED AND INSTALLED BY BLUEBONNET ELECTRIC COOPERATIVE (BEC). THE 12470V SERVICE FEEDER CABLES, CORRESPONDING CONDUIT/DUCT BANK DEDICATED TO THE 12470V SERVICE FEEDER CABLES, 12470V RISER POLES, 12470V OVERHEAD (EXPOSED) CONDUCTORS, 12470V-480V TRANSFORMERS "OP-XFMR-01L" AND "OP-XFMR-01R" SHALL BE SIZED, FURNISHED, AND INSTALLED BY BEC. THE LOCATION/ROUTING OF ALL PROPOSED EXPOSED 12470V SYSTEMS AND PROPOSED UNDERGROUND 12470V SYSTEMS FURNISHED AND INSTALLED BY BEC SHOWN HERE ARE APPROXIMATE. CLOSELY AND CAREFULLY COORDINATE LOCATION/ROUTING OF ALL EXPOSED SYSTEMS AND ALL UNDERGROUND DUCT BANK SYSTEMS WITH BEC PRIOR TO COMMENCING FULL SCALE INSTALLATION ACTIVITIES AND MAKE ALL FINAL CONNECTIONS. FOR ADDITIONAL INFORMATION RELATED TO THE PROPOSED ELECTRICAL SERVICE, REFER TO THE OVERALL ONE-LINE DRAWING NO. HE-1 AND ENLARGED SERVICE TRANSFORMER AREA PLAN ON DRAWING NO. HE-21. PROPOSED DUCT BANK "DBIC-OP/TELE" IS NOT FURNISHED NOR INSTALLED BY BEC.
5. FURNISH AND INSTALL ENTIRE LENGTH OF DUCT BANK AS REQUIRED TO INTERCONNECT PROPOSED MAIN CONTROL PANEL "OP-MCP-001" AND BLUEBONNET ELECTRIC COOPERATIVE ELECTRICAL SERVICE POLE TO FACILITATE TELEPHONE SERVICE CONNECTION. ACTUAL LOCATION OF ELECTRICAL SERVICE POLE MAY VARY. ALSO REFER TO KEYNOTE TWO.

GENERAL NOTES:

1. EXTREME CARE MUST BE TAKEN FOR THE INSTALLATION OF THE ELECTRICAL DUCT BANKS SINCE THERE ARE NO AVAILABLE AS BUILT RECORDS OF PROFILES IDENTIFYING THE LOCATION AND INVERT ELEVATIONS OF EXISTING UNDERGROUND ELECTRICAL SYSTEM (CONDUITS, DUCT BANK, GROUNDING NETWORK, ETC.) AND UNDERGROUND MECHANICAL PIPING. ROUTING OF NEW DUCT BANK SHOWN IS BASED ON SCHEMATIC KNOWLEDGE OF THE SIZE OF MECHANICAL PIPING AND THEIR APPROXIMATE SIZE AND/OR LOCATION. NO DATA IS AVAILABLE PERTAINING TO EXISTING UNDERGROUND ELECTRICAL DUCT BANK SYSTEM AND ITS COORDINATION WITH THE UNDERGROUND MECHANICAL SYSTEM. THEREFORE THE CONTRACTOR IS TO EXERCISE EXTREME CARE, VERIFY LOCATION/ROUTING/ELEVATION OF EXISTING UNDERGROUND UTILITIES PRIOR TO COMMENCING FULL SCALE INSTALLATION PROCESS OF THE PROPOSED DUCT BANK SYSTEM. FOLLOWING THE DISCOVERY VERIFICATION OF EXISTING UNDERGROUND UTILITIES, SHOULD ADJUSTMENT/MODIFICATIONS BECOME A NECESSITY TO EITHER THE EXISTING OR PROPOSED SYSTEM (AS APPLICABLE), THE EXISTING DISCOVERED FIELD CONDITIONS MUST BE BROUGHT TO THE ENGINEER'S ATTENTION FOR EXECUTION OF THE NECESSARY ADJUSTMENTS/MODIFICATIONS.
2. PROPOSED ITEMS ARE SHOWN IN DARK LINEWORK. FUTURE ITEMS ARE SHOWN IN LIGHT LINEWORK, UNLESS NOTED OTHERWISE.
3. NOT ALL MANHOLES OR UNDERGROUND UTILITIES ARE SHOWN ON THIS DRAWING.
4. EXACT LOCATIONS OF MECHANICAL/STRUCTURAL/CIVIL COMPONENTS ARE NOT SHOWN ON THIS DRAWING. REFER TO MECHANICAL/STRUCTURAL/CIVIL DRAWINGS FOR EXACT LOCATIONS OF MECHANICAL/STRUCTURAL/CIVIL ITEMS.
5. NOT ALL ELECTRICAL/MECHANICAL/STRUCTURAL/CIVIL COMPONENTS ARE SHOWN ON THIS DRAWING. REFER TO ELECTRICAL/MECHANICAL/STRUCTURAL/CIVIL DRAWINGS, AS APPLICABLE, FOR ADDITIONAL INFORMATION.
6. CONTRACTOR SHALL CLOSELY AND CAREFULLY COORDINATE ROUTE OF PROPOSED CONDUIT/WIRE WITH EXISTING AND PROPOSED CIVIL/MECHANICAL/STRUCTURAL/ELECTRICAL SYSTEMS/COMPONENTS/EQUIPMENT/UTILITIES, ETC.
7. CONTRACTOR SHALL SIZE ALL PULL BOXES PER, AND IN ACCORDANCE WITH, THE REQUIREMENTS OF THE NATIONAL ELECTRICAL CODE (N.E.C.).
8. SPACE AND ENCASE ALL CONDUIT/DUCT BANK SYSTEM(S) IN SAND PER DETAILS ON DRAWING NO. SE-8.
9. ALSO REFER TO DUCT BANK PLAN AND PROFILE DRAWINGS, THE CIVIL/STRUCTURAL DRAWINGS, AND ELECTRICAL SITE DRAWINGS FOR ADDITIONAL INFORMATION AND/OR CONTINUATION OF PROPOSED CONDUIT/DUCT BANK SYSTEMS.
10. THE LOCATIONS AND SIZES OF EQUIPMENT SHOWN ARE APPROXIMATE. THE CONTRACTOR SHALL FIELD VERIFY CONDITIONS PRIOR TO COMMENCING CONSTRUCTION.

REFERENCE DRAWINGS:

RE-33 – RE-34 – CONDUIT/WIRE SCHEDULE

RE-35 – RE-38 – PANEL SCHEDULES

RECORD DRAWING
THIS CONSTRUCTION DOCUMENT WAS PREPARED USING INFORMATION SUPPLIED BY THE CONTRACTOR TO REPRESENT CONSTRUCTION CHANGES. THIS DOCUMENT IS FOR INFORMATION AND REFERENCE IN CONNECTION WITH THE OWNER'S USE AND OCCUPANCY OF THE PROJECT AND IS NOT INTENDED FOR BID, PERMIT OR CONSTRUCTION.
BY: K.A. Harutunian DATE: 1/5/2007

WARNING
0 1/2 1
IF THIS BAR DOES NOT MEASURE 1" THEN DRAWING IS NOT TO SCALE

K. A. HARUTUNIAN 59181 REGISTERED PROFESSIONAL ENGINEER
10/18/2003

Dwg. No. BE-3

REUSE OF DOCUMENTS
This document and the ideas and designs incorporated herein as an instrument of professional service has been developed, designed and prepared by Harutunian Engineering, Inc. and is not to be used, in whole or part, for any other project without the written authorization of the City of Austin and Harutunian Engineering, Inc. © 2003

HARUTUNIAN ENGINEERING INCORPORATED
ENGINEERING AND ENVIRONMENTAL CONSULTANTS
305 EAST HUNTLAND DRIVE SUITE 300 AUSTIN, TEXAS 78752

NO.	DATE	REVISION	APPRV.
4			
3			
2			
1			

CITY OF AUSTIN, TEXAS
NORTHEAST INTERIM WASTEWATER TREATMENT PLANT

SITE ELECTRICAL PLAN
(SHEET 3 OF 3)

Turner Collie & Braden Inc.
ENGINEERS • PLANNERS • PROJECT MANAGERS

Unit PUBLIC WORKS	Scale AS NOTED	Date OCTOBER 2003	
Designed HEI	Checked HEI	Job No. 052-122094-0008	
Drawn HEI	Approved HEI	Sheet 72/327	

◇# KEY NOTES

1. DISCONNECT AND REMOVE CABLE/WIRE IN ITS ENTIRETY FROM CONDUIT IN DUCT BANK. EXISTING CONDUIT SHALL REMAIN.
2. DEMOLISH UNDERGROUND DUCT BANKS IN THEIR ENTIRETY AS SHOWN IN HATCHED AREAS. IN VICINITY OF DEMOLITION, TAKE CARE TO AVOID DAMAGING OR COMPROMISING STRUCTURAL INTEGRITY OF ALL UNDERGROUND PIPES AND MANHOLES THAT ARE TO REMAIN. ALL DUCT BANK SIZES AND ROUTES ARE UNKNOWN. FIELD VERIFY ACTUAL CONDITIONS PRIOR TO COMMENCING DEMOLITION. COORDINATE WITH CIVIL/STRUCTURAL.
3. THERE IS AN EXISTING GENERATOR "OP-GEN-01" IN THIS LOCATION WHICH SHALL REMAIN AND BE REUSED DURING RENOVATION ACTIVITIES.
4. REFER TO DEMOLITION SITE PLAN DRAWING [05DE01] AND DEMOLITION ENLARGED SITE PLAN DRAWING [05E17] FOR ADDITIONAL INFORMATION REGARDING THE DEMOLITION OF THIS UNDERGROUND DUCT BANK.
5. REFER TO DEMOLITION SITE PLAN DRAWING [05DE01] AND DEMOLITION ENLARGED SITE PLAN DRAWING [05E17] FOR ADDITIONAL INFORMATION REGARDING DEMOLITION OF EXISTING EQUIPMENT AND UNDERGROUND DUCT BANK WITHIN THIS AREA.
6. REFER TO DEMOLITION OPERATIONS BUILDING PLAN DRAWINGS FOR ADDITIONAL DEMOLITION INFORMATION.

GENERAL NOTES:

1. NOT ALL DEMOLITION REQUIREMENTS ARE SHOWN ON THIS DRAWING. REFER TO DETAILED AREA DEMOLITION DRAWINGS FOR ADDITIONAL REQUIREMENTS AND INFORMATION.
2. REFER TO APPLICABLE AREA DEMOLITION DRAWINGS FOR ADDITIONAL REQUIREMENTS AND INFORMATION.

THIS CONFORMED DOCUMENT IS RELEASED FOR THE CONVENIENCE OF THE CONTRACTOR UNDER THE AUTHORITY OF:

K. A. Harutunian — 11-01-22

K. A. HARUTUNIAN, P.E. — DATE
TX LIC NO. 59181

SEE DISCLAIMER FOR LIMITATIONS OF USE.

CONTRACT DOCUMENTS DATED FEBRUARY 28, 2022, AS PART OF THE BIDDING DOCUMENTS (DRAWINGS AND SPECIFICATIONS) AND SUBSEQUENTLY ISSUED ADDENDA HAVE BEEN MERGED INTO ONE CONFORMING SET OF DOCUMENTS FOR THE CONVENIENCE OF THE CONTRACTOR. IF INCONSISTENCIES OR AMBIGUITIES BETWEEN "CONFORMED" DOCUMENTS AND CONTRACT DOCUMENTS ARE FOUND, THE CONTRACT DOCUMENTS SHALL GOVERN.

This document, and the designs incorporated herein, is an instrument of professional service that has been developed, designed and prepared by Harutunian Engineering, Inc., and is not to be used, in whole or in part, for any other project without giving written notice to Harutunian Engineering, Inc.

REV	DATE	BY	DESCRIPTION
			CONFORMED DOCUMENTS

DESIGNED HEI
DRAWN HEI
CHECKED HEI
DATE NOVEMBER 2022

** ORIGINAL SEALED BY K.A. HARUTUNIAN 02-28-22 TX PE 59181 **

HARUTUNIAN ENGINEERING INCORPORATED
ENGINEERING AND ENVIRONMENTAL CONSULTANTS
8100 CROSS PARK DRIVE AUSTIN, TEXAS 78754
TBPE REGISTRATION NO. F-2408

carollo
TBPELS No. F-882

CITY OF AUSTIN — FOUNDED 1839

CITY OF AUSTIN

CITY OF AUSTIN
WILD HORSE RANCH WWTP EXPANSION
DEMOLITION
SITE DUCT BANK SECTIONS - DEMOLITION - 1

VERIFY SCALES
BAR IS ONE INCH ON ORIGINAL DRAWING
0 1"
IF NOT ONE INCH ON THIS SHEET, ADJUST SCALES ACCORDINGLY

JOB NO. 10976A.00
DRAWING NO. 05DE05
SHEET NO. 113 OF 464

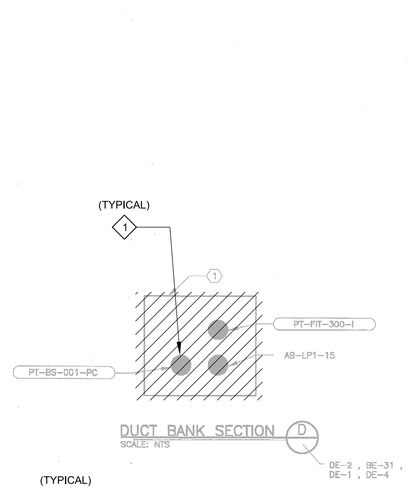

DUCT BANK SECTION D
SCALE: NTS

DE-2 , BE-31 , DE-1 , DE-4

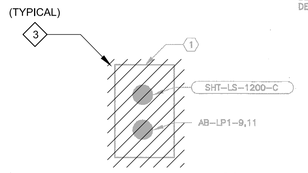

DUCT BANK SECTION E
SCALE: NTS

BE-31 , GE-1

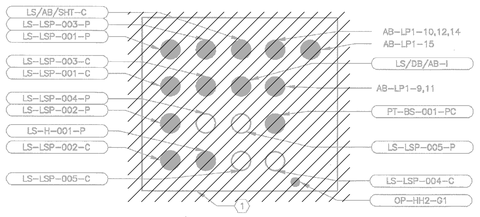

DUCT BANK SECTION F
SCALE: NTS

BE-31

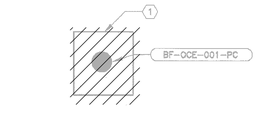

DUCT BANK SECTION G
SCALE: NTS

IE-1
BE-31

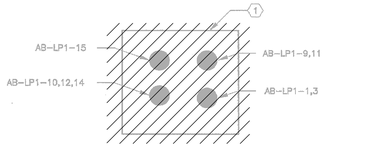

DUCT BANK SECTION H
SCALE: NTS

BE-31,DE-2

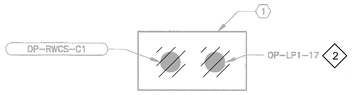

DUCT BANK SECTION I
SCALE: NTS

BE-33,HE-21

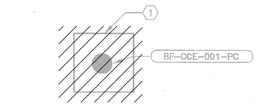

DUCT BANK SECTION J
SCALE: NTS

IE-1

KEY NOTES:

1 SPACE AND ENCASE IN SAND PER THE DETAILS ON DRAWING NO. SE-8.

GENERAL NOTES:

1. EXTREME CARE MUST BE TAKEN FOR THE INSTALLATION OF THE ELECTRICAL DUCT BANKS SINCE THERE ARE NO AVAILABLE AS BUILT RECORDS OF PROFILES IDENTIFYING THE LOCATION AND INVERT ELEVATIONS OF EXISTING UNDERGROUND ELECTRICAL SYSTEM AND UNDERGROUND MECHANICAL PIPING. ROUTING OF NEW DUCT BANK SHOWN IS BASED ON SCHEMATIC KNOWLEDGE OF THE SIZE OF MECHANICAL PIPING AND THEIR APPROXIMATE SIZE AND/OR LOCATION. NO DATA IS AVAILABLE PERTAINING TO EXISTING UNDERGROUND ELECTRICAL DUCT BANK SYSTEM AND ITS COORDINATION WITH THE UNDERGROUND MECHANICAL SYSTEM. THEREFORE THE CONTRACTOR IS TO EXERCISE EXTREME CARE, VERIFY LOCATION/ROUTING/ELEVATION OF EXISTING UNDERGROUND UTILITIES PRIOR TO COMMENCING FULL SCALE INSTALLATION PROCESS OF THE PROPOSED DUCT BANK SYSTEM. FOLLOWING THE DISCOVERY VERIFICATION OF EXISTING UNDERGROUND UTILITIES, SHOULD ADJUSTMENT/MODIFICATIONS BECOME A NECESSITY TO EITHER THE EXISTING OR PROPOSED SYSTEM (AS APPLICABLE), THE EXISTING DISCOVERED FIELD CONDITIONS MUST BE BROUGHT TO THE ENGINEERS ATTENTION FOR EXECUTION OF THE NECESSARY ADJUSTMENTS/MODIFICATIONS.

REFERENCE DRAWINGS:

RE-33 – RE-34 – CONDUIT/WIRE SCHEDULE

RE-35 – RE-38 – PANEL SCHEDULES

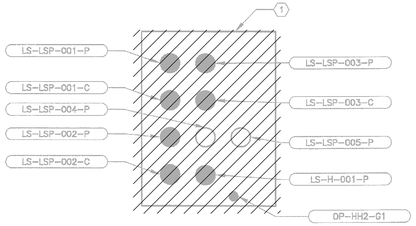

DUCT BANK SECTION K
SCALE: NTS

BE-31 , IE-1

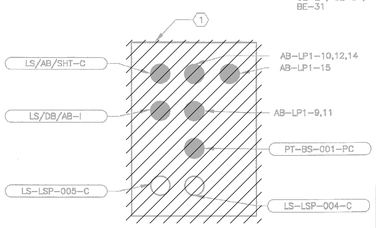

DUCT BANK SECTION L
SCALE: NTS

CE-2 , CE-3 , BE-31

DUCT BANK SECTION M
SCALE: NTS

CE-2 , CE-3
CE-4 , BE-31

CONDUIT/DUCT BANK SECTION DIMENSION TABLE

LEGEND:

NOTE: DIMENSIONS SHOWN ON TABLE ARE MAXIMUM DIMENSIONS IN INCHES.

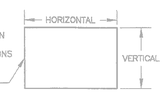

TYPICAL CONDUIT/DUCT BANK SECTION

SECTION IDENTIFIER	HORIZONTAL (INCHES)	VERTICAL (INCHES)
D	18"	18"
E	12"	18"
F	30"	30"
G	12"	18"
H	18"	18"
I	18"	12"
J	12"	12"
K	12"	12"
L	24"	30"
M	24"	30"

NOTE: REFER TO "CONDUIT/DUCT BANK SECTION DIMENSION TABLE" ON THIS DRAWING FOR MAXIMUM DIMENSIONS OF THE CONDUIT/DUCT BANK SECTIONS ON THIS DRAWING.

KEY NOTES

1. DISCONNECT AND REMOVE CABLE/WIRE IN ITS ENTIRETY FROM CONDUIT IN DUCT BANK.
2. RECORD DRAWINGS INDICATE THAT CIRCUITS LP1-17, 19 POWERS THE EXISTING RAIN WATER SYSTEM. HOWEVER, BASED ON FIELD OBSERVATIONS THE ACTUAL CIRCUIT NUMBERS POWERING THE EXISTING RAIN WATER SYSTEM AND WATER PUMP "OP-SWP-001" ARE LP1-36,38. CONTRACTOR SHALL FIELD VERIFY EXISTING CONDITIONS PRIOR TO COMMENCING DEMOLITION ACTIVITIES. REFER TO DEMOLITION PANEL SCHEDULE ON DRAWING NO. [80DE10] AND [80DE13] FOR ADDITIONAL INFORMATION.
3. DUCT BANK TO BE DEMOLISHED IN ITS ENTIRETY. REFER TO PLAN DRAWINGS FOR ADDITIONAL INFORMATION.

RECORD DRAWING
THIS CONSTRUCTION DOCUMENT WAS PREPARED USING INFORMATION SUPPLIED BY THE CONTRACTOR TO REPRESENT CONSTRUCTION CHANGES. THIS DOCUMENT IS FOR INFORMATION AND REFERENCE IN CONNECTION WITH THE OWNER'S USE AND OCCUPANCY OF THE PROJECT AND IS NOT INTENDED FOR BID, PERMIT OR CONSTRUCTION.
BY: K.A. Harutunian DATE: 1/6/2007

REUSE OF DOCUMENTS
This document and the ideas and designs incorporated herein as an instrument of professional service has been developed, designed and prepared by Harutunian Engineering, Inc. and is not to be used, in whole or part, for any other project without the written authorization of the City of Austin and Harutunian Engineering, Inc. © 2005

HARUTUNIAN ENGINEERING INCORPORATED
ENGINEERING AND ENVIRONMENTAL CONSULTANTS
309 EAST HUNTLAND DRIVE SUITE 300 AUSTIN, TEXAS 78754

NO.	DATE	REVISION	APPROV.
4			
3			
2			
1			

WARNING
0 1/2
IF THIS BAR DOES NOT MEASURE 1" THEN DRAWING IS NOT TO SCALE

K. A. HARUTUNIAN 59181 REGISTERED PROFESSIONAL ENGINEER STATE OF TEXAS
10/15/2003

Dwg. No. BE-34

CITY OF AUSTIN, TEXAS
NORTHEAST INTERIM WASTEWATER TREATMENT PLANT

SITE ELECTRICAL DUCT BANK SECTIONAL VIEWS (SHEET 1 OF 3)

Turner Collie & Braden Inc.
ENGINEERS • PLANNERS • PROJECT MANAGERS

Unit PUBLIC WORKS	Scale NONE	Date OCTOBER 2003	
Designed HEI	Checked HEI	Job No. 052-122094-0008	
Drawn HEI	Approved HEI	Sheet 77/327	

THIS CONFORMED DOCUMENT IS RELEASED FOR THE CONVENIENCE OF THE CONTRACTOR UNDER THE AUTHORITY OF:

K. A. Harutunian 11-01-22

K. A. HARUTUNIAN, P.E. DATE
TX LIC NO. 59181

SEE DISCLAIMER FOR LIMITATIONS OF USE.

CONTRACT DOCUMENTS DATED FEBRUARY 28, 2022, AS PART OF THE BIDDING DOCUMENTS (DRAWINGS AND SPECIFICATIONS) AND SUBSEQUENTLY ISSUED ADDENDA HAVE BEEN MERGED INTO ONE CONFORMING SET OF DOCUMENTS FOR THE CONVENIENCE OF THE CONTRACTOR. IF INCONSISTENCIES OR AMBIGUITIES BETWEEN "CONFORMED" DOCUMENTS AND CONTRACT DOCUMENTS ARE FOUND, THE CONTRACT DOCUMENTS SHALL GOVERN.

This document, and the designs incorporated herein, is an instrument of professional service that has been developed, designed and prepared by Harutunian Engineering, Inc., and is not to be used, in whole or in part, for any other project without giving written notice to Harutunian Engineering, Inc.

REV	DATE	BY	DESCRIPTION
			CONFORMED DOCUMENTS

DESIGNED HEI
DRAWN HEI
CHECKED HEI
DATE NOVEMBER 2022

** ORIGINAL SEALED BY K.A. HARUTUNIAN 02-28-22 TX PE 59181 **

HARUTUNIAN ENGINEERING INCORPORATED
ENGINEERING AND ENVIRONMENTAL CONSULTANTS
8100 CROSS PARK DRIVE AUSTIN, TEXAS 78754
TBPE REGISTRATION NO. F-2408

carollo® TBPELS No. F-882

CITY OF AUSTIN FOUNDED 1839

CITY OF AUSTIN

CITY OF AUSTIN
WILD HORSE RANCH WWTP EXPANSION
DEMOLITION
SITE DUCT BANK SECTIONS - DEMOLITION - 2

VERIFY SCALES
BAR IS ONE INCH ON ORIGINAL DRAWING
0 1"
IF NOT ONE INCH ON THIS SHEET, ADJUST SCALES ACCORDINGLY

JOB NO. 10976A.00
DRAWING NO. 05DE06
SHEET NO. 114 OF 464

(TYPICAL) 2

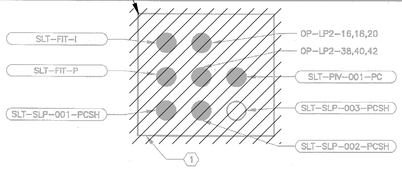

DUCT BANK SECTION A
SCALE: NTS
BE-32 , EE-3

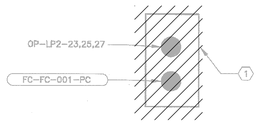

DUCT BANK SECTION B
SCALE: NTS
BE-32 , EE-1

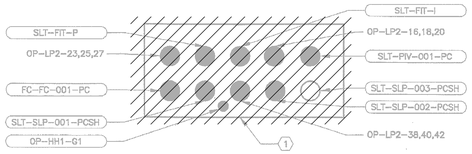

DUCT BANK SECTION C
SCALE: NTS
BE-32

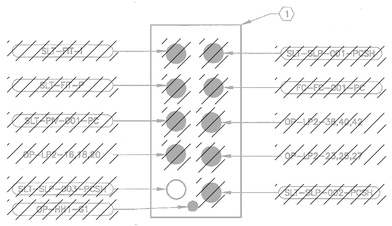

DUCT BANK SECTION D
SCALE: NTS
BE-32

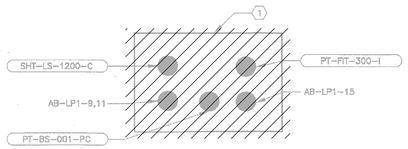

DUCT BANK SECTION E
SCALE: NTS
CE-2 , CE-3
CE-4 , BE-31

(TYPICAL) 1

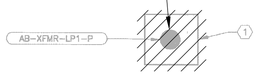

DUCT BANK SECTION F
SCALE: NTS
BE-31

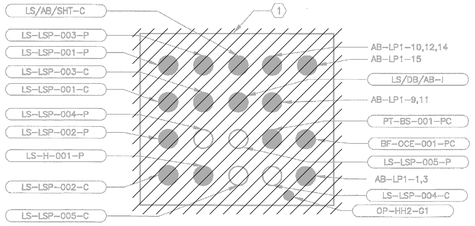

DUCT BANK SECTION G
SCALE: NTS
BE-31

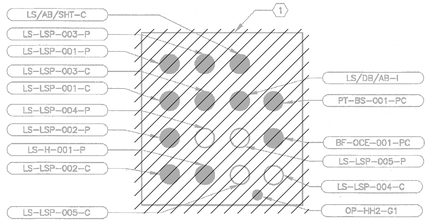

DUCT BANK SECTION H
SCALE: NTS
BE-31

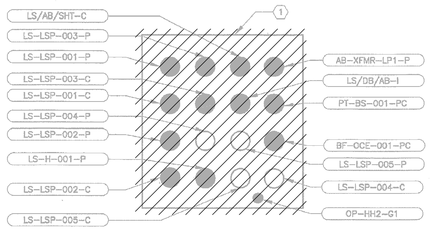

DUCT BANK SECTION I
SCALE: NTS
BE-31 , BE-32

(TYPICAL) 3

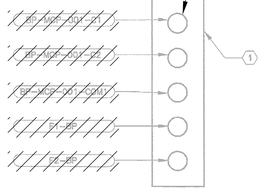

DUCT BANK SECTION J
SCALE: NTS
BE-32

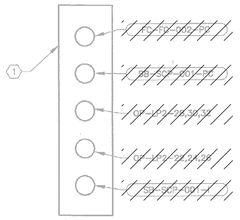

DUCT BANK SECTION K
SCALE: NTS
BE-33

KEY NOTES:

(1) SPACE AND ENCASE IN SAND PER THE DETAILS ON DRAWING NO. SE-8.

GENERAL NOTES:

1. EXTREME CARE MUST BE TAKEN FOR THE INSTALLATION OF THE ELECTRICAL DUCT BANKS SINCE THERE ARE NO AVAILABLE AS BUILT RECORDS OF PROFILES IDENTIFYING THE LOCATION AND INVERT ELEVATIONS OF EXISTING UNDERGROUND ELECTRICAL SYSTEM AND UNDERGROUND MECHANICAL PIPING. ROUTING OF NEW DUCT BANK SHOWN IS BASED ON SCHEMATIC KNOWLEDGE OF THE SIZE OF MECHANICAL PIPING AND THEIR APPROXIMATE SIZE AND/OR LOCATION. NO DATA IS AVAILABLE PERTAINING TO EXISTING UNDERGROUND ELECTRICAL DUCT BANK SYSTEM AND ITS COORDINATION WITH THE UNDERGROUND MECHANICAL SYSTEM. THEREFORE THE CONTRACTOR IS TO EXERCISE EXTREME CARE, VERIFY LOCATION/ROUTING/ELEVATION OF EXISTING UNDERGROUND UTILITIES PRIOR TO COMMENCING FULL SCALE INSTALLATION PROCESS OF THE PROPOSED DUCT BANK SYSTEM. FOLLOWING THE DISCOVERY VERIFICATION OF EXISTING UNDERGROUND UTILITIES, SHOULD ADJUSTMENT/MODIFICATIONS BECOME A NECESSITY TO EITHER THE EXISTING OR PROPOSED SYSTEM (AS APPLICABLE), THE EXISTING DISCOVERED FIELD CONDITIONS MUST BE BROUGHT TO THE ENGINEERS ATTENTION FOR EXECUTION OF THE NECESSARY ADJUSTMENTS/MODIFICATIONS.

REFERENCE DRAWINGS:

RE-33 – RE-34 – CONDUIT/WIRE SCHEDULE

RE-35 – RE-38 – PANEL SCHEDULES

CONDUIT/DUCT BANK SECTION DIMENSION TABLE

LEGEND:

NOTE: DIMENSIONS SHOWN ON TABLE ARE MAXIMUM DIMENSIONS IN INCHES.

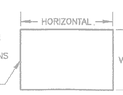

SECTION IDENTIFIER	HORIZONTAL (INCHES)	VERTICAL (INCHES)
A	24"	24"
B	12"	18"
C	30"	18"
D	18"	30"
E	24"	18"
F	12"	12"
G	30"	30"
H	30"	30"
I	30"	30"
J	18"	42"
K	12"	42"

NOTE: REFER TO "CONDUIT/DUCT BANK SECTION DIMENSION TABLE" ON THIS DRAWING FOR MAXIMUM DIMENSIONS OF THE CONDUIT/DUCT BANK SECTIONS ON THIS DRAWING.

KEY NOTES

1. DISCONNECT AND REMOVE CABLE/WIRE IN ITS ENTIRETY FROM CONDUIT IN DUCT BANK. CONDUIT SHALL REMAIN.
2. DUCT BANK TO BE DEMOLISHED IN ITS ENTIRETY. REFER TO PLAN DRAWINGS FOR ADDITIONAL INFORMATION.
3. EXISTING EMPTY CONDUIT TO BE REUSED DURING RENOVATION ACTIVITIES. REFER TO RENOVATION DRAWINGS FOR ADDITIONAL INFORMATION .

RECORD DRAWING
THIS CONSTRUCTION DOCUMENT WAS PREPARED USING INFORMATION SUPPLIED BY THE CONTRACTOR TO REPRESENT CONSTRUCTION CHANGES. THIS DOCUMENT IS FOR INFORMATION AND REFERENCE IN CONNECTION WITH THE OWNER'S USE AND OCCUPANCY OF THE PROJECT AND IS NOT INTENDED FOR BID, PERMIT OR CONSTRUCTION.
BY: K.A. Harutunian DATE: 1/6/2007

REUSE OF DOCUMENTS
This document and the ideas and designs incorporated herein as an instrument of professional service has been developed, designed and prepared by Harutunian Engineering, Inc. and is not to be used, in whole or part, for any other project without the written authorization of the City of Austin and Harutunian Engineering, Inc. © 2003

HARUTUNIAN ENGINEERING INCORPORATED
ENGINEERING AND ENVIRONMENTAL CONSULTANTS
309 EAST HUNTLAND DRIVE
SUITE 300
AUSTIN, TEXAS
78752

NO.	DATE	REVISION	APPROV.
4			
3			
2			
1			

WARNING
0 1/2 1
IF THIS BAR DOES NOT MEASURE 1" THEN DRAWING IS NOT TO SCALE

K. A. HARUTUNIAN 59181 STATE OF TEXAS REGISTERED PROFESSIONAL ENGINEER 10/18/2005

CITY OF AUSTIN, TEXAS
NORTHEAST INTERIM WASTEWATER TREATMENT PLANT

SITE ELECTRICAL DUCT BANK SECTIONAL VIEWS (SHEET 2 OF 3)

Turner Collie & Braden Inc.
ENGINEERS • PLANNERS • PROJECT MANAGERS

Unit PUBLIC WORKS	Scale NONE	Date OCTOBER 2003	
Designed HEI	Checked HEI	Job No. 052-122094-0008	
Drawn HEI	Approved HEI	Sheet 78/327	
Dwg. No. BE-35			

THIS CONFORMED DOCUMENT IS RELEASED FOR THE CONVENIENCE OF THE CONTRACTOR UNDER THE AUTHORITY OF:

K. A. Harutunian 11-01-22
K. A. HARUTUNIAN, P.E. DATE
TX LIC NO. 59181

SEE DISCLAIMER FOR LIMITATIONS OF USE.

CONTRACT DOCUMENTS DATED FEBRUARY 28, 2022, AS PART OF THE BIDDING DOCUMENTS (DRAWINGS AND SPECIFICATIONS) AND SUBSEQUENTLY ISSUED ADDENDA HAVE BEEN MERGED INTO ONE CONFORMING SET OF DOCUMENTS FOR THE CONVENIENCE OF THE CONTRACTOR. IF INCONSISTENCIES OR AMBIGUITIES BETWEEN "CONFORMED" DOCUMENTS AND CONTRACT DOCUMENTS ARE FOUND, THE CONTRACT DOCUMENTS SHALL GOVERN.

This document, and the designs incorporated herein, is an instrument of professional service that has been developed, designed and prepared by Harutunian Engineering, Inc., and is not to be used, in whole or in part, for any other project without giving written notice to Harutunian Engineering, Inc.

REV	DATE	BY	DESCRIPTION
			CONFORMED DOCUMENTS

DESIGNED HEI
DRAWN HEI
CHECKED HEI
DATE NOVEMBER 2022

** ORIGINAL SEALED BY K.A. HARUTUNIAN 02-28-22 TX PE 59181 **

HARUTUNIAN ENGINEERING INCORPORATED
ENGINEERING AND ENVIRONMENTAL CONSULTANTS
8100 CROSS PARK DRIVE
AUSTIN, TEXAS 78754
TBPE REGISTRATION NO. F-2408

carollo
TBPELS No. F-882

CITY OF AUSTIN
FOUNDED 1839
CITY OF AUSTIN

CITY OF AUSTIN
WILD HORSE RANCH WWTP EXPANSION
DEMOLITION
SITE DUCT BANK SECTIONS - DEMOLITION - 3

VERIFY SCALES
BAR IS ONE INCH ON ORIGINAL DRAWING
0 1"
IF NOT ONE INCH ON THIS SHEET, ADJUST SCALES ACCORDINGLY

JOB NO. 10976A.00
DRAWING NO. 05DE07
SHEET NO. 115 OF 464

KEY NOTES

1. DISCONNECT AND REMOVE CABLE/WIRE IN ITS ENTIRETY FROM CONDUIT IN DUCT BANK. CONDUIT SHALL REMAIN.
2. DUCT BANK TO BE DEMOLISHED IN ITS ENTIRETY. REFER TO PLAN DRAWINGS FOR ADDITIONAL INFORMATION.

(TYPICAL) ① LE-LS1-001-A, SF-MCP-001-C2, LE-LS1-004-A, SF-MCP-001-C2, LE-LS1-005-A, AE-XFMR-UV1-001, LE-LS1-006-A, FI-SF, LE-LS1-001-A, LE-LS1-003-A, LE-LS1-004-A, LE-LS1-005-A, LE-LS1-006-A, SF-LS1-001-A, SF-LS1-002-A, SF-LS1-003-A, SF-LS1-004-A, SF-LS1-005-A, SF-LS1-006-A, FI-SF-001-A, OP-HH2-G1

DUCT BANK SECTION A
SCALE: NTS
BE-32

① F1-MCC-OP1R, F2-MCC-OP1R, F3-MCC-OP1R, F4-MCC-OP1R, F5-MCC-OP1R

DUCT BANK SECTION D
SCALE: NTS
BE-33 , HE-21, HE-12

KEY NOTES:

① SPACE AND ENCASE IN SAND PER THE DETAILS ON DRAWING NO. SE-8.

GENERAL NOTES:

1. EXTREME CARE MUST BE TAKEN FOR THE INSTALLATION OF THE ELECTRICAL DUCT BANKS SINCE THERE ARE NO AVAILABLE AS BUILT RECORDS OF PROFILES IDENTIFYING THE LOCATION AND INVERT ELEVATIONS OF EXISTING UNDERGROUND ELECTRICAL SYSTEM AND UNDERGROUND MECHANICAL PIPING. ROUTING OF NEW DUCT BANK SHOWN IS BASED ON SCHEMATIC KNOWLEDGE OF THE SIZE OF MECHANICAL PIPING AND THEIR APPROXIMATE SIZE AND/OR LOCATION. NO DATA IS AVAILABLE PERTAINING TO EXISTING UNDERGROUND ELECTRICAL DUCT BANK SYSTEM AND ITS COORDINATION WITH THE UNDERGROUND MECHANICAL SYSTEM. THEREFORE THE CONTRACTOR IS TO EXERCISE EXTREME CARE, VERIFY LOCATION/ROUTING/ELEVATION OF EXISTING UNDERGROUND UTILITIES PRIOR TO COMMENCING FULL SCALE INSTALLATION PROCESS OF THE PROPOSED DUCT BANK SYSTEM. FOLLOWING THE DISCOVERY VERIFICATION OF EXISTING UNDERGROUND UTILITIES, SHOULD ADJUSTMENT/MODIFICATIONS BECOME A NECESSITY TO EITHER THE EXISTING OR PROPOSED SYSTEM (AS APPLICABLE), THE EXISTING DISCOVERED FIELD CONDITIONS MUST BE BROUGHT TO THE ENGINEERS ATTENTION FOR EXECUTION OF THE NECESSARY ADJUSTMENTS/MODIFICATIONS.

REFERENCE DRAWINGS:

RE-33 – RE-34 – CONDUIT/WIRE SCHEDULE

RE-35 – RE-38 – PANEL SCHEDULES

CONDUIT/DUCT BANK SECTION DIMENSION TABLE

LEGEND:

NOTE: DIMENSIONS SHOWN ON TABLE ARE MAXIMUM DIMENSIONS IN INCHES.

TYPICAL CONDUIT/DUCT BANK SECTION — HORIZONTAL, VERTICAL

SECTION IDENTIFIER	HORIZONTAL (INCHES)	VERTICAL (INCHES)
A	42"	42"
B	60"	42"
C	30"	24"
D	30"	24"
E	30"	30"
F	24"	30"
G	30"	30"
H	12"	24"
I	12"	12"

NOTE: REFER TO "CONDUIT/DUCT BANK SECTION DIMENSION TABLE" ON THIS DRAWING FOR MAXIMUM DIMENSIONS OF THE CONDUIT/DUCT BANK SECTIONS ON THIS DRAWING.

① LS1-001-A, LE-LS1-001-A, LE-LS1-002-A, LE-LS1-003-A, LE-LS1-004-A, LE-LS1-005-A, LE-LS1-006-A, SF-LS1-001-A, SF-LS1-002-A, SF-LS1-003-A, SF-LS1-004-A, SF-LS1-005-A, SF-LS1-006-A, FI-SF-001-A, LS-UV1-001-A, LS-UV2-001-A, OP-HH2-G1

DUCT BANK SECTION E
SCALE: NTS
BE-32

(TYPICAL) ② ① OP-LP1-11,13,15, FI-F-004-PC, FI-F-003-PC

DUCT BANK SECTION H
SCALE: NTS
HE-12, HE-21, FE-1, BE-30, BE-32

① FI-F-002-PC, EF-FE-900-I, EF-FE-900-TE, UV-CP-UV1-C, OP-EF-G1, OP-LP2-29,31,33, OP-LP2-33,35,37, UV-XFMR-UV1-P, EF-I1, NPW-NP-002-PC, FI-F-001-PC, NPW-NP-001-PC, UV-CP-UV1-COM

DUCT BANK SECTION F
SCALE: NTS
FE-4, FE-1, FE-2 BE-32

① OP-MCP-TELE-C1

DUCT BANK SECTION I
SCALE: NTS
BE-3, BE-33, HE-12

① F1-MCC-OP1L, F2-MCC-OP1L, F3-MCC-OP1L, F4-MCC-OP1L, F5-MCC-OP1L

DUCT BANK SECTION C
SCALE: NTS
BE-33,HE-21,HE-12

① OP-LP2-33,35,37, OP-LP1-11,13,15, FI-F-002-PC, FI-F-004-PC, EF-FE-900-I, FI-F-003-PC, EF-FE-900-TE, UV-CP-UV1-C, OP-EF-G1, OP-LP2-29,31,33, UV-XFMR-UV1-P, EF-I1, NPW-NP-002-PC, FI-F-001-PC, NPW-NP-001-PC, UV-CP-UV1-COM

DUCT BANK SECTION G
SCALE: NTS
HE-12, HE-21, FE-1, BE-32, BE-33

① LS-UV1-001-A, LE-LS1-001-A, LE-LS1-002-A, LE-LS1-003-A, LE-LS1-004-A, LE-LS1-005-A, LE-LS1-006-A, SF-LS1-001-A, SF-LS1-002-A, SF-LS1-003-A, SF-LS1-004-A, SF-LS1-005-A, SF-LS1-006-A, FI-SF-001-A, LE-LS1-001-A, LE-LS1-002-A, LE-LS1-003-A, LE-LS1-004-A, LE-LS1-005-A, LE-LS1-006-A, SF-LS1-001-A, SF-LS1-002-A, SF-LS1-003-A, SF-LS1-004-A, SF-LS1-005-A, SF-LS1-006-A, FI-SF-001-A, OP-HH2-G1

DUCT BANK SECTION B
SCALE: NTS
BE-32 , BE-33 , HE-12

RECORD DRAWING
THIS CONSTRUCTION DOCUMENT WAS PREPARED USING INFORMATION SUPPLIED BY THE CONTRACTOR TO REPRESENT CONSTRUCTION CHANGES. THIS DOCUMENT IS FOR INFORMATION AND REFERENCE IN CONNECTION WITH THE OWNER'S USE AND OCCUPANCY OF THE PROJECT AND IS NOT INTENDED FOR BID, PERMIT OR CONSTRUCTION.
BY: K.A. Hartunian DATE: 1/5/2007

REUSE OF DOCUMENTS
This document and the ideas and designs incorporated herein as an instrument of professional service has been developed, designed and prepared by Harutunian Engineering, Inc. and is not to be used, in whole or part, for any other project without the written authorization of the City of Austin and Harutunian Engineering, Inc. © 2003

HARUTUNIAN ENGINEERING INCORPORATED
ENGINEERING AND ENVIRONMENTAL CONSULTANTS
305 EAST HIGHLAND DRIVE SUITE 900 AUSTIN, TEXAS 78752

NO.	DATE	REVISION	APPROV.
4			
3			
2			
1			

WARNING
0 1/2 1
IF THIS BAR DOES NOT MEASURE 1" THEN DRAWING IS NOT TO SCALE

K. A. HARUTUNIAN 59181 REGISTERED PROFESSIONAL ENGINEER STATE OF TEXAS
10/18/2003

CITY OF AUSTIN, TEXAS
NORTHEAST INTERIM WASTEWATER TREATMENT PLANT

SITE ELECTRICAL DUCT BANK SECTIONAL VIEWS (SHEET 3 OF 3)

Turner Collie & Braden Inc.
ENGINEERS • PLANNERS • PROJECT MANAGERS

Unit PUBLIC WORKS	Scale NONE	Date OCTOBER 2003	
Designed HEI	Checked HEI	Job No. 052-122094-0008	
Drawn HEI	Approved HEI	Sheet 79/327	

Dwg. No. BE-36

THIS CONFORMED DOCUMENT IS RELEASED FOR THE CONVENIENCE OF THE CONTRACTOR UNDER THE AUTHORITY OF:

K. A. Hartunian — 11-01-22
K. A. HARUTUNIAN, P.E. — DATE
TX LIC NO. 59181

SEE DISCLAIMER FOR LIMITATIONS OF USE.

CONTRACT DOCUMENTS DATED FEBRUARY 28, 2022, AS PART OF THE BIDDING DOCUMENTS (DRAWINGS AND SPECIFICATIONS) AND SUBSEQUENTLY ISSUED ADDENDA HAVE BEEN MERGED INTO ONE CONFORMING SET OF DOCUMENTS FOR THE CONVENIENCE OF THE CONTRACTOR. IF INCONSISTENCIES OR AMBIGUITIES BETWEEN "CONFORMED" DOCUMENTS AND CONTRACT DOCUMENTS ARE FOUND, THE CONTRACT DOCUMENTS SHALL GOVERN.

This document, and the designs incorporated herein, is an instrument of professional service that has been developed, designed and prepared by Harutunian Engineering, Inc., and is not to be used, in whole or in part, for any other project without giving written notice to Harutunian Engineering, Inc.

REV	DATE	BY	DESCRIPTION
			CONFORMED DOCUMENTS

DESIGNED HEI
DRAWN HEI
CHECKED HEI
DATE NOVEMBER 2022

** ORIGINAL SEALED BY K.A. HARUTUNIAN 02-28-22 TX PE 59181 **

HARUTUNIAN ENGINEERING INCORPORATED
ENGINEERING AND ENVIRONMENTAL CONSULTANTS
8100 CROSS PARK DRIVE AUSTIN, TEXAS 78754
TBPE REGISTRATION NO. F-2408

carollo TBPELS No. F-882

CITY OF AUSTIN
FOUNDED 1839
CITY OF AUSTIN

CITY OF AUSTIN
WILD HORSE RANCH WWTP EXPANSION
DEMOLITION
SITE DUCT BANK SECTIONS - DEMOLITION - 4

VERIFY SCALES
BAR IS ONE INCH ON ORIGINAL DRAWING
0 1"
IF NOT ONE INCH ON THIS SHEET, ADJUST SCALES ACCORDINGLY

JOB NO. 10976A.00
DRAWING NO. 05DE08
SHEET NO. 116 OF 464

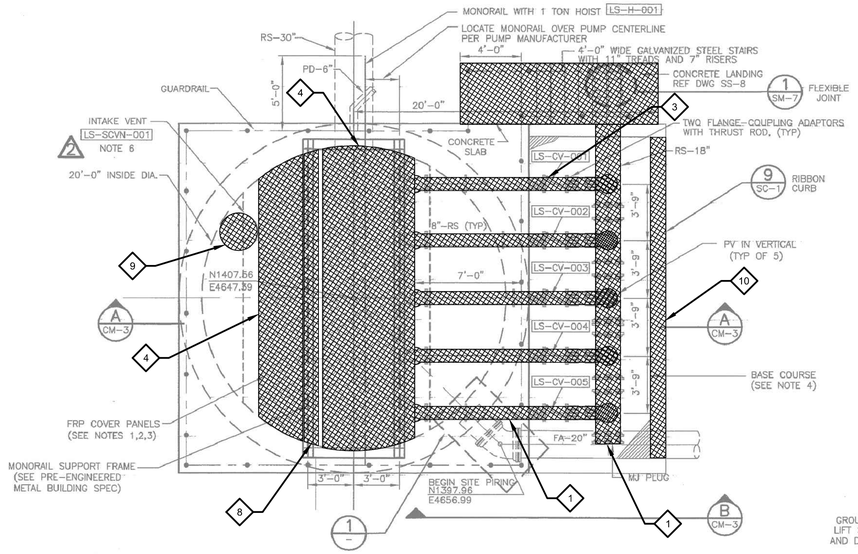

PLAN VIEW AT ELEVATION 486.00

SCALE : 1/4"=1'-0"

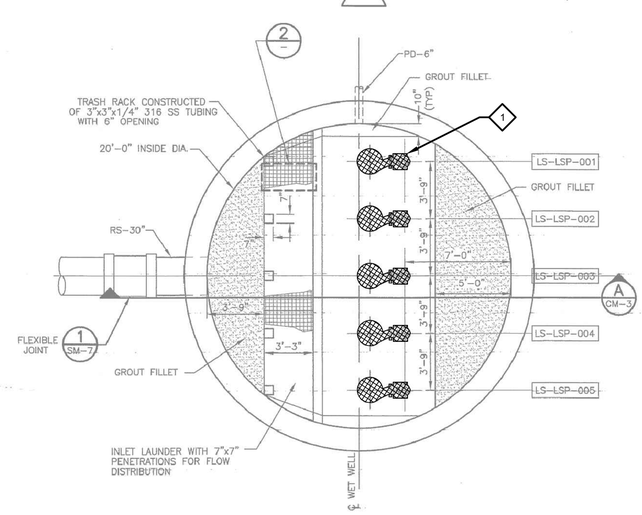

PLAN VIEW AT ELEVATION 470.00

SCALE : 1/4"=1'-0"

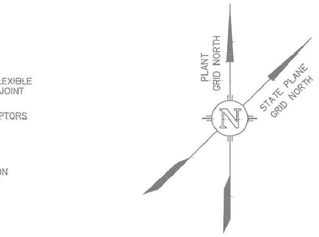

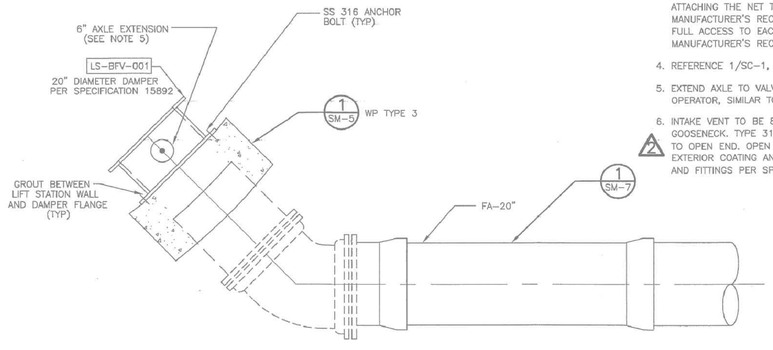

DETAIL 1

SCALE : 3/4"=1'-0"

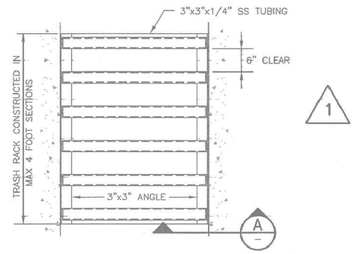

TRASH RACK DETAIL 2

SCALE : NTS

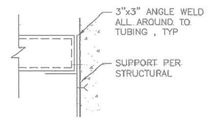

SECTION A

SCALE : NTS

LEGEND

PHASE II (NOT IN THIS CONTRACT)

NOTES:

1. FRP COVER PANELS NOT TO EXCEED 4'x8' OR 80 LBS. PANELS TO BE SIZED TO ALLOW ANY PUMP TO BE REMOVED BY REMOVING ONLY ONE PANEL. PROVIDE TWO LIFTING HANDLES PER PANEL. HANDLES TO REST FLUSH WITH PANEL WHEN NOT IN USE. FIBERGRATE COVERED GRATING OR EQUAL.
2. SIZE AND SPACING OF COVER PANEL SUPPORTS, PER FRP MANUFACTURER.
3. PROVIDE FALL PROTECTION NET, HATCHNET 121 BY SAFE APPROACH OR EQUAL. FURNISH FALL PROTECTION NET WTH 304 STAINLESS STEEL ATTACHMENT HARDWARE. ATTACHMENT HARDWARE TO BE SUITABLE FOR ATTACHING THE NET TO THE STRUCTURE IN ACCORDANCE WITH THE NET MANUFACTURER'S RECOMMENDATION. HARDWARE TO BE SPACED TO ALLOW FULL ACCESS TO EACH PUMP IN ACCORDANCE WITH THE PUMP MANUFACTURER'S RECOMMENDATION.
4. REFERENCE 1/SC-1, ROAD CONSTRUCTION NOTE 4.
5. EXTEND AXLE TO VALVE BOX CAST INTO TOP OF SLAB WITH 2" NUT OPERATOR, SIMILAR TO 3/SM-5.
6. INTAKE VENT TO BE 8" DIP FLGxPE WITH 2-90° BENDS TO CREATE GOOSENECK. TYPE 316 STAINLESS STEEL INSECT SCREEN TO BE FLANGED TO OPEN END. OPEN END TO BE MINIMUM 2'-0" ABOVE GRADE. EXTERIOR COATING AND INTERIOR LINING FOR 8" DIP PIPE AND FITTINGS PER SPECIFICATIONS 15062 G.2 AND H.3 RESPECTIVELY.

RECORD DRAWING

THIS CONSTRUCTION DOCUMENT WAS PREPARED USING INFORMATION SUPPLIED BY THE CONTRACTOR TO REPRESENT CONSTRUCTION CHANGES. THIS DOCUMENT IS FOR INFORMATION AND REFERENCE IN CONNECTION WITH THE OWNER'S USE AND OCCUPANCY OF THE PROJECT AND IS NOT INTENDED FOR BID, PERMIT OR CONSTRUCTION.

BY: Shay Ralls Roalson DATE: FEBRUARY 15, 2007

THE SEAL APPEARING ON THIS DOCUMENT WAS AUTHORIZED BY SHAY RALLS ROALSON, P.E. 83993 ON NOVEMBER 26, 2003

WARNING 0 1/2 1 IF THIS BAR DOES NOT MEASURE 1" THEN DRAWING IS NOT TO SCALE

STATE OF TEXAS SHAY RALLS ROALSON 83993 REGISTERED PROFESSIONAL ENGINEER

Dwg. No. CM-2

NO.	DATE	REVISION	APPROV.
4			
3			
2	2/09/07	RECORD DRAWING	SR
1	11/25/03	ADDENDUM No. 2	CNH

CITY OF AUSTIN, TEXAS
NORTHEAST INTERIM WASTEWATER TREATMENT PLANT

INFLUENT LIFT STATION MECHANICAL PLAN VIEWS

Turner Collie & Braden Inc.
ENGINEERS • PLANNERS • PROJECT MANAGERS

Unit PUBLIC WORKS	Scale AS NOTES	Date AUGUST 2003	
Designed SMR	Checked CNH, SMR	Job No. 052-122094-0008	
Drawn PW	Approved SGE	Sheet 87/327	

GENERAL NOTES:

1. THIS IS A RECORD DRAWING FROM A PREVIOUS CONTRACT. ACTUAL FIELD CONDITIONS MAY BE DIFFERENT FROM THOSE SHOWN ON THIS DRAWING. CONTRACTOR TO FIELD VERIFY INSTALLED CONDITIONS IMPACTED BY OR IMPACTING THIS WORK PRIOR TO INITIATING THE WORK. CONTRACTOR SHALL REFER TO CONSTRUCTION DOCUMENTS FOR RESPONSIBILITIES RELATIVE TO VERIFICATION OF EXISTING FACILITIES AND COORDINATION WITH PLANT OPERATION.

KEY NOTES:

1. REMOVE ALL EXISTING SUBMERSIBLE PUMPS, ALL ASSOCIATED PIPING AND VALVES UP TO THE LIMITS SHOWN.
2. REMOVE ALL SUBMERSIBLE PUMP GUIDE RAILS AND SUPPORT BRACKETS.
3. REMOVE ALL AIR/VACUUM VALVE AND PRESSURE GAUGE CONNECTIONS.
4. REMOVE FRP PANELS COVERING THE SUBMERSIBLE PUMPS.
5. REMOVE 3" CONCRETE BASE FOR EXCAVATION.
6. REMOVE ALL DEMOLITION MATERIALS AND DISPOSE OF THEM IN AN APPROVED MANNER, IN ACCORDANCE WITH CONTRACT DOCUMENTS.
7. EXISTING MONORAIL WITH 1 TON ELECTRIC HOIST AND MONORAIL SUPPORT FRAME TO REMAIN.
8. DEMOLISH AND SAW-CUT EXISTING CONCRETE BEAM . EXISTING REINFORCEMENT INTO WALL TO REMAIN UNDAMAGED. COORDINATE LIMITS OF DEMOLITION WITH IMPROVEMENTS SHOWN ON STRUCTURAL DRAWINGS.
9. REMOVE VENT AND FILL HOLE WITH NON SHRINK CONCRETE GROUT.
10. REMOVE EXISTING CONCRETE PAD AND RIBBON CURB.

LEGEND

ITEMS TO BE DEMOLISHED

THIS CONFORMED DOCUMENT IS RELEASED FOR THE CONVENIENCE OF THE CONTRACTOR UNDER THE AUTHORITY OF:

JOSE M. FARIAS, P.E. 11-01-22
TX LIC NO. 111389 DATE

SEE DISCLAIMER FOR LIMITATIONS OF USE.

CONTRACT DOCUMENTS DATED JUNE 10, 2022, AS PART OF THE BIDDING DOCUMENTS (DRAWINGS AND SPECIFICATIONS) AND SUBSEQUENTLY ISSUED ADDENDA HAVE BEEN MERGED INTO ONE CONFORMING SET OF DOCUMENTS FOR THE CONVENIENCE OF THE CONTRACTOR. IF INCONSISTENCIES OR AMBIGUITIES BETWEEN "CONFORMED" DOCUMENTS AND CONTRACT DOCUMENTS ARE FOUND, THE CONTRACT DOCUMENTS SHALL GOVERN.

REV	DATE	BY	DESCRIPTION
1	8/26/2022	JF	ADDENDUM 1

CONFORMED DOCUMENTS

DESIGNED AWI
DRAWN AWI
CHECKED KWF
DATE JULY 2021

** ORIGINAL SEALED BY JOSE M. FARIAS 06-10-22 TX PE 111389 **

garza
7708 Rialto Blvd., Suite 125
Austin, Texas 78735
Tel. (512) 298-3284 Fax (512) 298-2592
TBPE # F-14629
Garza EMC, LLC © Copyright 2022

carollo® TBPE No. F-882

CITY OF AUSTIN FOUNDED 1839

CITY OF AUSTIN

CITY OF AUSTIN
WILD HORSE RANCH WWTP EXPANSION
DEMOLITION
INFLUENT LIFT STATION PLANS AND SECTION (SHEET 1 OF 2)

VERIFY SCALES
BAR IS ONE INCH ON ORIGINAL DRAWING
0 1"
IF NOT ONE INCH ON THIS SHEET, ADJUST SCALES ACCORDINGLY

JOB NO. 10976A.10
DRAWING NO. 10D01
SHEET NO. 117 OF 464

LAST SAVED BY: FGM

PROJECT NO. 9469B10
FILE NAME: X:\105517-00004\Civil\00-CAD\105517-00004-DEM0 90% 1 of 2.dwg

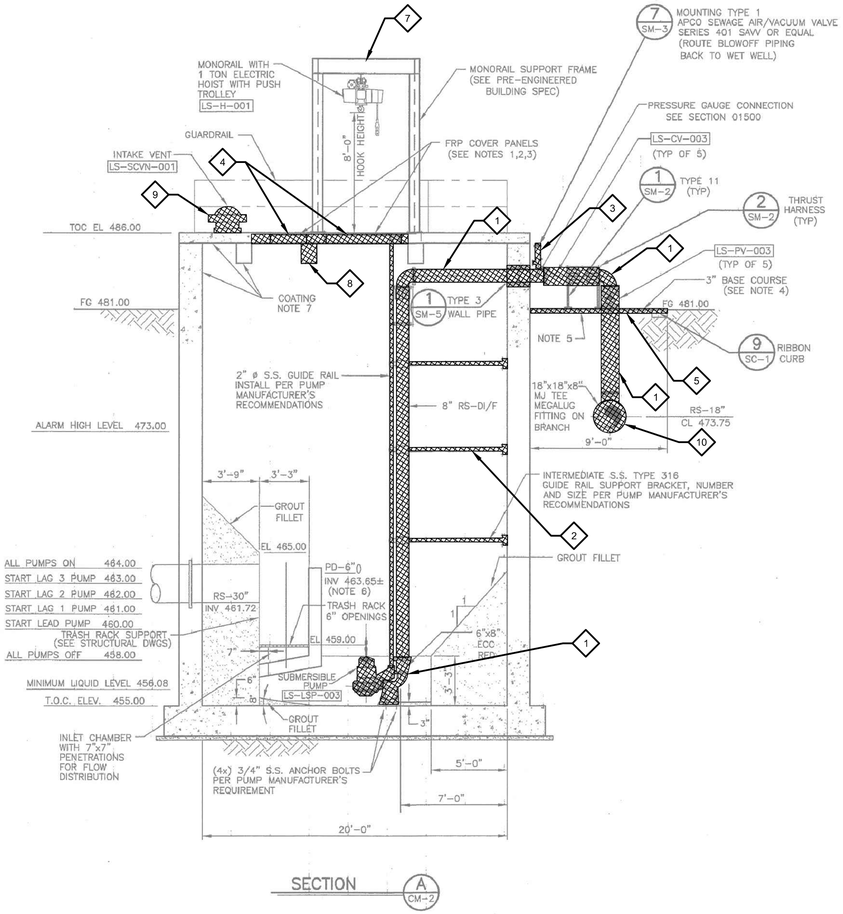

SECTION A CM-2

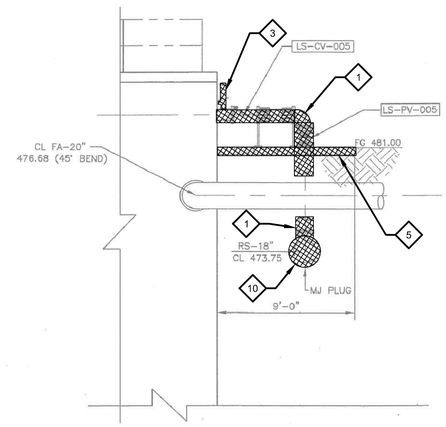

SECTION B CM-2

NOTES:

1. FRP COVER PANELS NOT TO EXCEED 4'x8' OR 80 LBS. PANELS TO BE SIZED TO ALLOW ANY PUMP TO BE REMOVED BY REMOVING ONLY ONE PANEL. PROVIDE TWO LIFTING HANDLES PER PANEL. HANDLES TO REST FLUSH WITH PANEL WHEN NOT IN USE. FIBERGRATE COVERED GRATING OR EQUAL.
2. SIZE AND SPACING OF COVER PANEL SUPPORTS PER FRP MANUFACTURER.
3. PROVIDE FALL PROTECTION NET, HATCHNET 121 BY SAFE APPROACH OR EQUAL. FURNISH FALL PROTECTION NET WTH 304 STAINLESS STEEL ATTACHMENT HARDWARE. ATTACHMENT HARDWARE TO BE SUITABLE FOR ATTACHING THE NET TO THE STRUCTURE IN ACCORDANCE WITH THE NET MANUFACTURER'S RECOMMENDATION. HARDWARE TO BE SPACED TO ALLOW FULL ACCESS TO EACH PUMP IN ACCORDANCE WITH THE PUMP MANUFACTURER'S RECOMMENDATION.
4. REFERENCE 1/SC-1, ROAD CONSTRUCTION NOTE 4.
5. PROVIDE CONCRETE PAD FOR PIPE SUPPORTS. EXTEND CONCRETE PAD 2-INCHES BEYOND PIPE SUPPORTS ON ALL FOUR SIDES.
6. PROVIDE FLAP VALVE FOR PD-6" LINE INTO LIFT STATION.
7. COAT THE INTERIOR LIFT STATION WALLS AND CEILING WITH POLYBIRD PER TABLE 1 OF SECTION 09902. WALLS TO BE COATED DOWN TO 18" BELOW THE MINIMUM LIQUID LEVEL. COAT INSIDE ALL PENETRATIONS. POLYBIRD TO BE TERMINATED WITH A 1/4" WIDE DEEP SAWCUT GROOVE AT THE EDGES.
8. FLOATS FOR BACKUP OPERATIONS TO BE SET AT ELEVATIONS:
   LSP-01: 465.00
   LSP-02: 466.00
   LSP-03: 467.00

RECORD DRAWING
THIS CONSTRUCTION DOCUMENT WAS PREPARED USING INFORMATION SUPPLIED BY THE CONTRACTOR TO REPRESENT CONSTRUCTION CHANGES. THIS DOCUMENT IS FOR INFORMATION AND REFERENCE IN CONNECTION WITH THE OWNER'S USE AND OCCUPANCY OF THE PROJECT AND IS NOT INTENDED FOR BID, PERMIT OR CONSTRUCTION.
BY: Shay Ralls Roalson DATE: FEBRUARY 15, 2007

GENERAL NOTES:

1. THIS IS A RECORD DRAWING FROM A PREVIOUS CONTRACT. ACTUAL FIELD CONDITIONS MAY BE DIFFERENT FROM THOSE SHOWN ON THIS DRAWING. CONTRACTOR TO FIELD VERIFY INSTALLED CONDITIONS IMPACTED BY OR IMPACTING THIS WORK PRIOR TO INITIATING THE WORK. CONTRACTOR SHALL REFER TO CONSTRUCTION DOCUMENTS FOR RESPONSIBILITIES RELATIVE TO VERIFICATION OF EXISTING FACILITIES AND COORDINATION WITH PLANT OPERATION.

KEY NOTES:

1. REMOVE ALL EXISTING SUBMERSIBLE PUMPS, ALL ASSOCIATED PIPING AND VALVES UP TO THE LIMITS SHOWN.
2. REMOVE ALL SUBMERSIBLE PUMP GUIDE RAILS AND SUPPORT BRACKETS.
3. REMOVE ALL AIR/VACUUM VALVE AND PRESSURE GAUGE CONNECTIONS.
4. REMOVE FRP PANELS COVERING THE SUBMERSIBLE PUMPS.
5. REMOVE 3-INCH CONCRETE BASE FOR EXCAVATION.
6. REMOVE ALL DEMOLITION MATERIALS AND DISPOSE OF THEM IN AN APPROVED MANNER, IN ACCORDANCE WITH CONTRACT DOCUMENTS.
7. EXISTING MONORAIL WITH 1 TON ELECTRIC HOIST AND MONORAIL SUPPORT FRAME TO REMAIN.
8. DEMOLISH AND SAW-CUT EXISTING CONCRETE BEAM . EXISTING REINFORCEMENT INTO WALL TO REMAIN UNDAMAGED. COORDINATE LIMITS OF DEMOLITION WITH IMPROVEMENTS SHOWN ON STRUCTURAL DRAWINGS.
9. REMOVE VENT AND FILL HOLE WITH NON SHRINK CONCRETE GROUT.
10. DEMOLISH EXISTING 18-INCH FORCE MAIN

LEGEND

ITEMS TO BE DEMOLISHED

THE SEAL APPEARING ON THIS DOCUMENT WAS AUTHORIZED BY SHAY RALLS ROALSON, P.E. 83993 ON OCTOBER 31, 2003

WARNING
0 1/2 1
IF THIS BAR DOES NOT MEASURE 1" THEN DRAWING IS NOT TO SCALE

STATE OF TEXAS
SHAY RALLS ROALSON
83993
REGISTERED PROFESSIONAL ENGINEER

Dwg. No. CM-3

NO.	DATE	REVISION	APPROV.
4			
3			
2			
1	2/08/07	RECORD DRAWING	SR

CITY OF AUSTIN, TEXAS
NORTHEAST INTERIM WASTEWATER TREATMENT PLANT

INFLUENT LIFT STATION MECHANICAL SECTIONS

Turner Collie & Braden Inc.
ENGINEERS • PLANNERS • PROJECT MANAGERS

Unit PUBLIC WORKS	Scale 1/4" = 1'-0"	Date AUGUST 2003	
Designed SMR	Checked CNH, SMR	Job No. 052-122094-0008	
Drawn PW	Approved SGE	Sheet 88/327	

THIS CONFORMED DOCUMENT IS RELEASED FOR THE CONVENIENCE OF THE CONTRACTOR UNDER THE AUTHORITY OF:

JOSE M. FARIAS, P.E.
TX LIC NO. 111389
11-01-22
DATE

SEE DISCLAIMER FOR LIMITATIONS OF USE.

CONTRACT DOCUMENTS DATED JUNE 10, 2022, AS PART OF THE BIDDING DOCUMENTS (DRAWINGS AND SPECIFICATIONS) AND SUBSEQUENTLY ISSUED ADDENDA HAVE BEEN MERGED INTO ONE CONFORMING SET OF DOCUMENTS FOR THE CONVENIENCE OF THE CONTRACTOR. IF INCONSISTENCIES OR AMBIGUITIES BETWEEN "CONFORMED" DOCUMENTS AND CONTRACT DOCUMENTS ARE FOUND, THE CONTRACT DOCUMENTS SHALL GOVERN.

LAST SAVED BY: FGM

CONFORMED DOCUMENTS

REV	DATE	BY	DESCRIPTION
1	8/26/2022	JF	ADDENDUM 1

DESIGNED AWI
DRAWN AWI
CHECKED KWF
DATE JULY 2021

** ORIGINAL SEALED BY JOSE M. FARIAS 06-10-22 TX PE 111389 **

garza
7708 Rialto Blvd., Suite 125
Austin, Texas 78735
Tel. (512) 298-3284 Fax (512) 298-2592
TBPE # F-14629
Garza EMC, LLC © Copyright 2022

carollo
TBPE No. F-882

CITY OF AUSTIN
FOUNDED 1839
CITY OF AUSTIN

CITY OF AUSTIN
WILD HORSE RANCH WWTP EXPANSION
DEMOLITION
INFLUENT LIFT STATION PLANS AND SECTION (SHEET 2 OF 2)

VERIFY SCALES
BAR IS ONE INCH ON ORIGINAL DRAWING
0 1"
IF NOT ONE INCH ON THIS SHEET, ADJUST SCALES ACCORDINGLY

JOB NO. 10976A.10
DRAWING NO. 10D02
SHEET NO. 118 OF 464

PROJECT NO. 9465B1●
FILE NAME: X:\1●9517-●●●●4\Civil●●-CAD\1●9517-●●●●4-DEM● 9●% 2 of 2.dw●

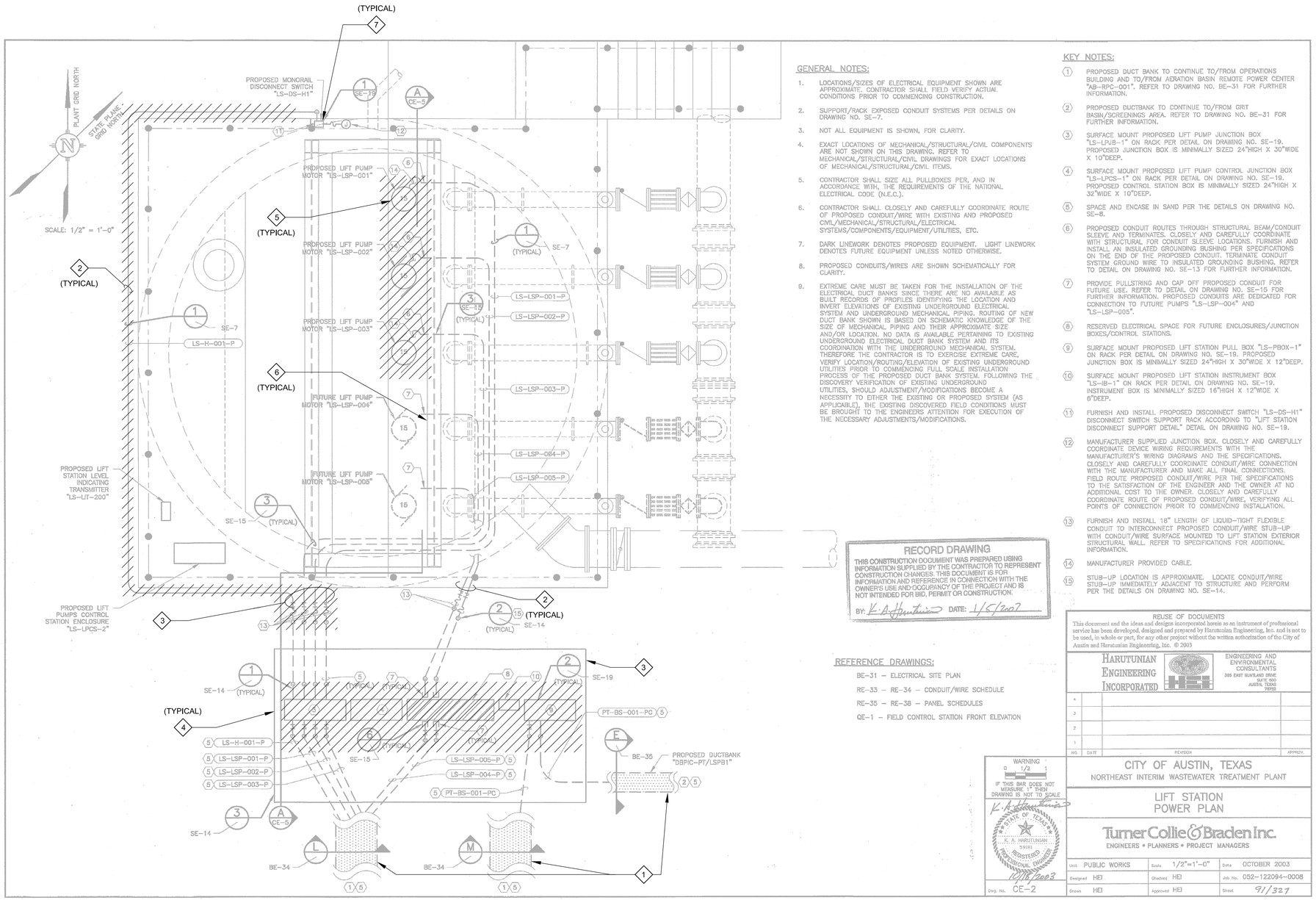

GENERAL NOTES:

1. LOCATIONS/SIZES OF ELECTRICAL EQUIPMENT SHOWN ARE APPROXIMATE. CONTRACTOR SHALL FIELD VERIFY ACTUAL CONDITIONS PRIOR TO COMMENCING CONSTRUCTION.
2. SUPPORT/RACK EXPOSED CONDUIT SYSTEMS PER DETAILS ON DRAWING NO. SE-7.
3. NOT ALL EQUIPMENT IS SHOWN, FOR CLARITY.
4. EXACT LOCATIONS OF MECHANICAL/STRUCTURAL/CIVIL COMPONENTS ARE NOT SHOWN ON THIS DRAWING. REFER TO MECHANICAL/STRUCTURAL/CIVIL DRAWINGS FOR EXACT LOCATIONS OF MECHANICAL/STRUCTURAL/CIVIL ITEMS.
5. CONTRACTOR SHALL SIZE ALL PULLBOXES PER, AND IN ACCORDANCE WITH, THE REQUIREMENTS OF THE NATIONAL ELECTRICAL CODE (N.E.C.).
6. CONTRACTOR SHALL CLOSELY AND CAREFULLY COORDINATE ROUTE OF PROPOSED CONDUIT/WIRE WITH EXISTING AND PROPOSED CIVIL/MECHANICAL/STRUCTURAL/ELECTRICAL SYSTEMS/COMPONENTS/EQUIPMENT/UTILITIES, ETC.
7. DARK LINEWORK DENOTES PROPOSED EQUIPMENT. LIGHT LINEWORK DENOTES FUTURE EQUIPMENT UNLESS NOTED OTHERWISE.
8. PROPOSED CONDUITS/WIRES ARE SHOWN SCHEMATICALLY FOR CLARITY.
9. EXTREME CARE MUST BE TAKEN FOR THE INSTALLATION OF THE ELECTRICAL DUCT BANKS SINCE THERE ARE NO AVAILABLE AS BUILT RECORDS OF PROFILES IDENTIFYING THE LOCATION AND INVERT ELEVATIONS OF EXISTING UNDERGROUND ELECTRICAL SYSTEM AND UNDERGROUND MECHANICAL PIPING. ROUTING OF NEW DUCT BANK SHOWN IS BASED ON SCHEMATIC KNOWLEDGE OF THE SIZE OF MECHANICAL PIPING AND THEIR APPROXIMATE SIZE AND/OR LOCATION. NO DATA IS AVAILABLE PERTAINING TO EXISTING UNDERGROUND ELECTRICAL DUCT BANK SYSTEM AND ITS COORDINATION WITH THE UNDERGROUND MECHANICAL SYSTEM. THEREFORE THE CONTRACTOR IS TO EXERCISE EXTREME CARE, VERIFY LOCATION/ROUTING/ELEVATION OF EXISTING UNDERGROUND UTILITIES PRIOR TO COMMENCING FULL SCALE INSTALLATION PROCESS OF THE PROPOSED DUCT BANK SYSTEM. FOLLOWING THE DISCOVERY VERIFICATION OF EXISTING UNDERGROUND UTILITIES, SHOULD ADJUSTMENT/MODIFICATIONS BECOME A NECESSITY TO EITHER THE EXISTING OR PROPOSED SYSTEM (AS APPLICABLE), THE EXISTING DISCOVERED FIELD CONDITIONS MUST BE BROUGHT TO THE ENGINEERS ATTENTION FOR EXECUTION OF THE NECESSARY ADJUSTMENTS/MODIFICATIONS.

KEY NOTES:

1. PROPOSED DUCT BANK TO CONTINUE TO/FROM OPERATIONS BUILDING AND TO/FROM AERATION BASIN REMOTE POWER CENTER "AB-RPC-001". REFER TO DRAWING NO. BE-31 FOR FURTHER INFORMATION.
2. PROPOSED DUCTBANK TO CONTINUE TO/FROM GRIT BASIN/SCREENINGS AREA. REFER TO DRAWING NO. BE-31 FOR FURTHER INFORMATION.
3. SURFACE MOUNT PROPOSED LIFT PUMP JUNCTION BOX "LS-LPJB-1" ON RACK PER DETAIL ON DRAWING NO. SE-19. PROPOSED JUNCTION BOX IS MINIMALLY SIZED 24"HIGH X 30"WIDE X 10"DEEP.
4. SURFACE MOUNT PROPOSED LIFT PUMP CONTROL JUNCTION BOX "LS-LPCS-1" ON RACK PER DETAIL ON DRAWING NO. SE-19. PROPOSED CONTROL STATION BOX IS MINIMALLY SIZED 24"HIGH X 32"WIDE X 10"DEEP.
5. SPACE AND ENCASE IN SAND PER THE DETAILS ON DRAWING NO. SE-8.
6. PROPOSED CONDUIT ROUTES THROUGH STRUCTURAL BEAM/CONDUIT SLEEVE AND TERMINATES. CLOSELY AND CAREFULLY COORDINATE WITH STRUCTURAL FOR CONDUIT SLEEVE LOCATIONS. FURNISH AND INSTALL AN INSULATED GROUNDING BUSHING PER SPECIFICATIONS ON THE END OF THE PROPOSED CONDUIT. TERMINATE CONDUIT SYSTEM GROUND WIRE TO INSULATED GROUNDING BUSHING. REFER TO DETAIL ON DRAWING NO. SE-13 FOR FURTHER INFORMATION.
7. PROVIDE PULLSTRING AND CAP OFF PROPOSED CONDUIT FOR FUTURE USE. REFER TO DETAIL ON DRAWING NO. SE-15 FOR FURTHER INFORMATION. PROPOSED CONDUITS ARE DEDICATED FOR CONNECTION TO FUTURE PUMPS "LS-LSP-004" AND "LS-LSP-005".
8. RESERVED ELECTRICAL SPACE FOR FUTURE ENCLOSURES/JUNCTION BOXES/CONTROL STATIONS.
9. SURFACE MOUNT PROPOSED LIFT STATION PULL BOX "LS-PBOX-1" ON RACK PER DETAIL ON DRAWING NO. SE-19. PROPOSED JUNCTION BOX IS MINIMALLY SIZED 24"HIGH X 30"WIDE X 12"DEEP.
10. SURFACE MOUNT PROPOSED LIFT STATION INSTRUMENT BOX "LS-IB-1" ON RACK PER DETAIL ON DRAWING NO. SE-19. INSTRUMENT BOX IS MINIMALLY SIZED 16"HIGH X 12"WIDE X 6"DEEP.
11. FURNISH AND INSTALL PROPOSED DISCONNECT SWITCH "LS-DS-H1" DISCONNECT SWITCH SUPPORT RACK ACCORDING TO "LIFT STATION DISCONNECT SUPPORT DETAIL" DETAIL ON DRAWING NO. SE-19.
12. MANUFACTURER SUPPLIED JUNCTION BOX. CLOSELY AND CAREFULLY COORDINATE DEVICE WIRING REQUIREMENTS WITH THE MANUFACTURER'S WIRING DIAGRAMS AND THE SPECIFICATIONS. CLOSELY AND CAREFULLY COORDINATE CONDUIT/WIRE CONNECTION WITH THE MANUFACTURER AND MAKE ALL FINAL CONNECTIONS. FIELD ROUTE PROPOSED CONDUIT/WIRE PER THE SPECIFICATIONS TO THE SATISFACTION OF THE ENGINEER AND THE OWNER AT NO ADDITIONAL COST TO THE OWNER. CLOSELY AND CAREFULLY COORDINATE ROUTE OF PROPOSED CONDUIT/WIRE, VERIFYING ALL POINTS OF CONNECTION PRIOR TO COMMENCING INSTALLATION.
13. FURNISH AND INSTALL 18" LENGTH OF LIQUID-TIGHT FLEXIBLE CONDUIT TO INTERCONNECT PROPOSED CONDUIT/WIRE STUB-UP WITH CONDUIT/WIRE SURFACE MOUNTED TO LIFT STATION EXTERIOR STRUCTURAL WALL. REFER TO SPECIFICATIONS FOR ADDITIONAL INFORMATION.
14. MANUFACTURER PROVIDED CABLE.
15. STUB-UP LOCATION IS APPROXIMATE. LOCATE CONDUIT/WIRE STUB-UP IMMEDIATELY ADJACENT TO STRUCTURE AND PERFORM PER THE DETAILS ON DRAWING NO. SE-14.

KEY NOTES

1. REFER TO DUCT BANK SECTION DEMOLITION SHEETS (05DE05) THROUGH (05DE08) FOR DEMOLITION DETAILS OF THE DUCT BANK CONTENTS.
2. DISCONNECT AND REMOVE ALL EXPOSED CONDUIT/WIRE IN ITS ENTIRETY.
3. DEMOLISH EQUIPMENT PAD IN ITS ENTIRETY. CUT CONDUITS A MINIMUM OF 6" BELOW GRADE AND SEAL WITH 50 YEAR NON SHRINK GROUT
4. DISCONNECT AND REMOVE PULLBOX IN ITS ENTIRETY.
5. COORDINATE DEMOLITION OF THE MOTORS WITH MECHANICAL.
6. CUT EMPTY EXPOSED CONDUITS ON THE LIFT STATION STRUCTURE AND MODIFY PER DETAIL E944/[00TE13].
7. DISCONNECT CONDUIT/WIRE FOR THE MONORAIL DISCONNECT SWITCH. HOIST AND DISCONNECT BOX TO REMAIN AND BE RECONNECTED DURING RENOVATION ACTIVITIES.

RECORD DRAWING
THIS CONSTRUCTION DOCUMENT WAS PREPARED USING INFORMATION SUPPLIED BY THE CONTRACTOR TO REPRESENT CONSTRUCTION CHANGES. THIS DOCUMENT IS FOR INFORMATION AND REFERENCE IN CONNECTION WITH THE OWNER'S USE AND OCCUPANCY OF THE PROJECT AND IS NOT INTENDED FOR BID, PERMIT OR CONSTRUCTION.
BY: K.A. Harutunian DATE: 1/5/2007

REFERENCE DRAWINGS:

BE-31 – ELECTRICAL SITE PLAN
RE-33 – RE-34 – CONDUIT/WIRE SCHEDULE
RE-35 – RE-38 – PANEL SCHEDULES
QE-1 – FIELD CONTROL STATION FRONT ELEVATION

REUSE OF DOCUMENTS
This document and the ideas and designs incorporated herein as an instrument of professional service has been developed, designed and prepared by Harutunian Engineering, Inc. and is not to be used, in whole or part, for any other project without the written authorization of the City of Austin and Harutunian Engineering, Inc. © 2003

HARUTUNIAN ENGINEERING INCORPORATED
ENGINEERING AND ENVIRONMENTAL CONSULTANTS
305 EAST HUNTLAND DRIVE SUITE 600 AUSTIN, TEXAS 78752

NO.	DATE	REVISION	APPROV.
4			
3			
2			
1			

WARNING
0 1/2 1
IF THIS BAR DOES NOT MEASURE 1" THEN DRAWING IS NOT TO SCALE

K.A. Harutunian
STATE OF TEXAS
K. A. HARUTUNIAN
59181
REGISTERED PROFESSIONAL ENGINEER
10/31/2003

CITY OF AUSTIN, TEXAS
NORTHEAST INTERIM WASTEWATER TREATMENT PLANT

LIFT STATION
POWER PLAN

Turner Collie & Braden Inc.
ENGINEERS • PLANNERS • PROJECT MANAGERS

Unit PUBLIC WORKS	Scale 1/2"=1'-0"	Date OCTOBER 2003	
Designed HEI	Checked HEI	Job No. 052-122094-0008	
Drawn HEI	Approved HEI	Sheet 91/327	
Dwg. No. CE-2			

THIS CONFORMED DOCUMENT IS RELEASED FOR THE CONVENIENCE OF THE CONTRACTOR UNDER THE AUTHORITY OF:

K. A. Harutunian — 11-01-22
K. A. HARUTUNIAN, P.E. — DATE
TX LIC NO. 59181

SEE DISCLAIMER FOR LIMITATIONS OF USE.

CONTRACT DOCUMENTS DATED FEBRUARY 28, 2022, AS PART OF THE BIDDING DOCUMENTS (DRAWINGS AND SPECIFICATIONS) AND SUBSEQUENTLY ISSUED ADDENDA HAVE BEEN MERGED INTO ONE CONFORMING SET OF DOCUMENTS FOR THE CONVENIENCE OF THE CONTRACTOR. IF INCONSISTENCIES OR AMBIGUITIES BETWEEN "CONFORMED" DOCUMENTS AND CONTRACT DOCUMENTS ARE FOUND, THE CONTRACT DOCUMENTS SHALL GOVERN.

This document, and the designs incorporated herein, is an instrument of professional service that has been developed, designed and prepared by Harutunian Engineering, Inc., and is not to be used, in whole or in part, for any other project without giving written notice to Harutunian Engineering, Inc.

REV	DATE	BY	DESCRIPTION
			CONFORMED DOCUMENTS

DESIGNED HEI
DRAWN HEI
CHECKED HEI
DATE NOVEMBER 2022

** ORIGINAL SEALED BY K.A. HARUTUNIAN 02-28-22 TX PE 59181 **

HARUTUNIAN ENGINEERING INCORPORATED
ENGINEERING AND ENVIRONMENTAL CONSULTANTS
8100 CROSS PARK DRIVE AUSTIN, TEXAS 78754
TBPE REGISTRATION NO. F-2408

carollo
TBPELS No. F-882

CITY OF AUSTIN
FOUNDED 1839

CITY OF AUSTIN

CITY OF AUSTIN
WILD HORSE RANCH WWTP EXPANSION
DEMOLITION
LIFT STATION
POWER PLAN - DEMOLITION

VERIFY SCALES
BAR IS ONE INCH ON ORIGINAL DRAWING
0 1"
IF NOT ONE INCH ON THIS SHEET, ADJUST SCALES ACCORDINGLY

JOB NO. 10976A.00
DRAWING NO. 10DE01
SHEET NO. 119 OF 464

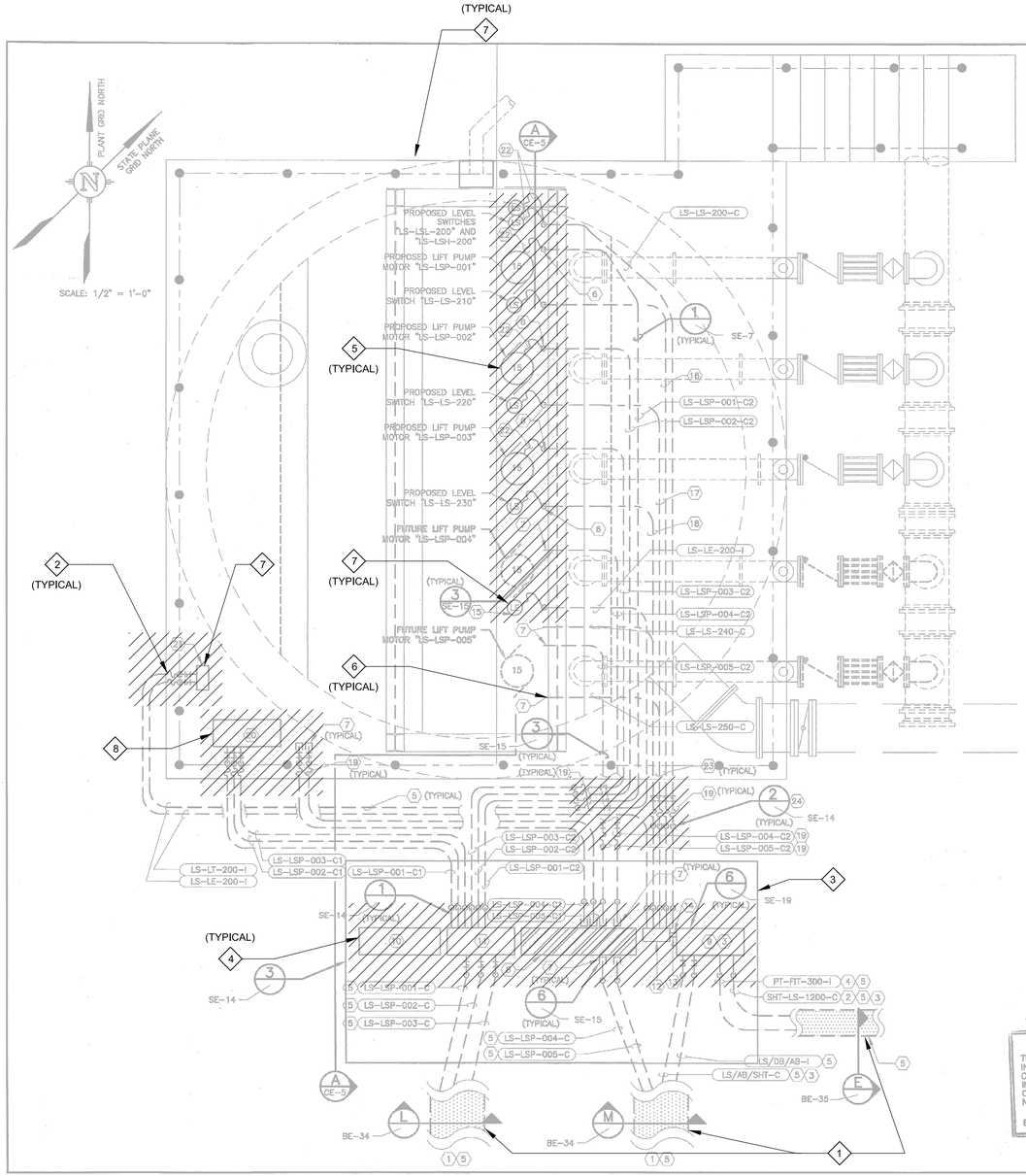

GENERAL NOTES:

1. LOCATIONS/SIZES OF ELECTRICAL EQUIPMENT SHOWN ARE APPROXIMATE. CONTRACTOR SHALL FIELD VERIFY ACTUAL CONDITIONS PRIOR TO COMMENCING CONSTRUCTION.
2. SUPPORT/RACK EXPOSED CONDUIT SYSTEMS PER DETAILS ON DRAWING NO. SE-7.
3. NOT ALL EQUIPMENT IS SHOWN, FOR CLARITY.
4. EXACT LOCATIONS OF MECHANICAL/STRUCTURAL/CIVIL COMPONENTS ARE NOT SHOWN ON THIS DRAWING. REFER TO MECHANICAL/STRUCTURAL/CIVIL DRAWINGS FOR EXACT LOCATIONS OF MECHANICAL/STRUCTURAL/CIVIL ITEMS.
5. CONTRACTOR SHALL SIZE ALL PULLBOXES PER, AND IN ACCORDANCE WITH, THE REQUIREMENTS OF THE NATIONAL ELECTRICAL CODE (N.E.C.).
6. CONTRACTOR SHALL CLOSELY AND CAREFULLY COORDINATE ROUTE OF PROPOSED CONDUIT/WIRE WITH EXISTING AND PROPOSED CIVIL/MECHANICAL/STRUCTURAL/ELECTRICAL SYSTEMS/COMPONENTS/EQUIPMENT/UTILITIES, ETC.
7. DARK LINEWORK DENOTES PROPOSED EQUIPMENT. LIGHT LINEWORK DENOTES FUTURE EQUIPMENT UNLESS NOTED OTHERWISE.
8. PROPOSED CONDUITS/WIRES ARE SHOWN SCHEMATICALLY FOR CLARITY.
9. EXTREME CARE MUST BE TAKEN FOR THE INSTALLATION OF THE ELECTRICAL DUCT BANKS SINCE THERE ARE NO AVAILABLE AS BUILT RECORDS OF PROFILES IDENTIFYING THE LOCATION AND INVERT ELEVATIONS OF EXISTING UNDERGROUND ELECTRICAL SYSTEM AND UNDERGROUND MECHANICAL PIPING. ROUTING OF NEW DUCT BANK SHOWN IS BASED ON SCHEMATIC KNOWLEDGE OF THE SIZE OF MECHANICAL PIPING AND THEIR APPROXIMATE SIZE AND/OR LOCATION. NO DATA IS AVAILABLE PERTAINING TO EXISTING UNDERGROUND ELECTRICAL DUCT BANK SYSTEM AND ITS COORDINATION WITH THE UNDERGROUND MECHANICAL SYSTEM. THEREFORE THE CONTRACTOR IS TO EXERCISE EXTREME CARE, VERIFY LOCATION/ROUTING/ELEVATION OF EXISTING UNDERGROUND UTILITIES PRIOR TO COMMENCING FULL SCALE INSTALLATION PROCESS OF THE PROPOSED DUCT BANK SYSTEM. FOLLOWING THE DISCOVERY VERIFICATION OF EXISTING UNDERGROUND UTILITIES, SHOULD ADJUSTMENT/MODIFICATIONS BECOME A NECESSITY TO EITHER THE EXISTING OR PROPOSED SYSTEM (AS APPLICABLE), THE EXISTING DISCOVERED FIELD CONDITIONS MUST BE BROUGHT TO THE ENGINEERS ATTENTION FOR EXECUTION OF THE NECESSARY ADJUSTMENTS/MODIFICATIONS.

REFERENCE DRAWINGS:

BE-31 – ELECTRICAL SITE PLAN

RE-33 – RE-34 – CONDUIT/WIRE SCHEDULE

RE-35 – RE-38 – PANEL SCHEDULES

QE-1 – FIELD CONTROL STATION FRONT ELEVATION

KEY NOTES CONTINUED:

19. FURNISH AND INSTALL 18" LENGTH OF LIQUID-TIGHT FLEXIBLE CONDUIT TO INTERCONNECT CONDUIT/WIRE STUB-UP WITH CONDUIT/WIRE SURFACE MOUNTED TO LIFT STATION EXTERIOR STRUCTURAL WALL AND MAKE ALL FINAL CONNECTIONS. REFER TO SPECIFICATIONS FOR ADDITIONAL INFORMATION.
20. SURFACE MOUNT PROPOSED LIFT PUMP CONTROL STATION ENCLOSURE "LS-LPCS-2" ON RACK PER DETAIL ON DRAWING NO. SE-19. PROPOSED CONTROL PULLBOX IS MINIMALLY SIZED 24"HIGH X 32"WIDE X 10"DEEP.
21. SURFACE MOUNT PROPOSED LIFT STATION LEVEL INDICATING TRANSMITTER ENCLOSURE "LS-LIT-200" ON RACK PER DETAIL ON DRAWING NO. SE-19. PROPOSED LIFT STATION LEVEL INDICATING TRANSMITTER ENCLOSURE "LS-LIT-200" IS MINIMALLY SIZED 14"HIGH X 12"WIDE X 6"DEEP.
22. MANUFACTURER PROVIDED CABLE.
23. PROPOSED CONDUIT/WIRE ROUTES VERTICALLY STACKED.
24. STUB-UP LOCATION IS APPROXIMATE. LOCATE CONDUIT/WIRE STUB-UP IMMEDIATELY ADJACENT TO STRUCTURE AND PERFORM PER THE DETAILS ON DRAWING NO. SE-14.

KEY NOTES:

1. PROPOSED DUCT BANK TO CONTINUE TO/FROM OPERATIONS BUILDING AND TO/FROM AERATION BASIN REMOTE POWER CENTER "AB-RPC-1". REFER TO DRAWING NO. BE-31 FOR FURTHER INFORMATION.
2. PROPOSED DUCTBANK TO CONTINUE TO/FROM GRIT BASIN/SCREENINGS AREA. REFER TO DRAWING NO. BE-31 FOR FURTHER INFORMATION.
3. PROPOSED CONTROL WIRING FROM CONDUITS TAGGED "SHT-LS-1200-C" COMBINE WITH LIFT STATION DEDICATED LEVEL SWITCHES INSIDE PULLBOX "LS-PBOX-1" AND ROUTE VIA CONDUIT TAGGED "LS/AB/SHT-C" TO CONNECT TO "CP-MCP-001" INSIDE THE OPERATIONS BUILDING. COIL 6'-0" OF EACH SPARE INSTRUMENTATION (DEDICATED FOR 4-20MA SIGNALS) CABLE INSIDE OF PULLBOX FOR FUTURE USE.
4. PROPOSED DUCTBANK TO CONTINUE TO/FROM SLUDGE HOLDING TANK. REFER TO DRAWING NO. BE-31 FOR FURTHER INFORMATION.
5. SPACE AND ENCASE IN SAND PER THE DETAILS ON DRAWING NO. SE-8.
6. PROPOSED CONDUIT ROUTES THROUGH STRUCTURAL BEAM/CONDUIT SLEEVE AND TERMINATES. CLOSELY AND CAREFULLY COORDINATE WITH STRUCTURAL FOR CONDUIT SLEEVE LOCATIONS. FURNISH AND INSTALL AN INSULATED GROUNDING BUSHING PER SPECIFICATIONS ON THE END OF THE PROPOSED CONDUIT. TERMINATE CONDUIT SYSTEM GROUND WIRE TO INSULATED GROUNDING BUSHING. REFER TO DETAIL ON DRAWING NO. SE-13 FOR FURTHER INFORMATION.
7. PROVIDE PULLSTRING AND CAP OFF PROPOSED CONDUIT FOR FUTURE USE. REFER TO DETAIL ON DRAWING NO. SE-15 FOR FURTHER INFORMATION. CONDUITS ARE DEDICATED FOR FUTURE CONNECTION TO FUTURE PUMPS "LS-LSP-004" AND "LS-LSP-005".
8. RESERVED ELECTRICAL SPACE FOR FUTURE ENCLOSURES/JUNCTION BOXES/CONTROL STATIONS.
9. SURFACE MOUNT PROPOSED LIFT STATION PULL BOX "LS-PBOX-1" ON RACK PER DETAIL ON DRAWING NO. SE-19. PROPOSED JUNCTION BOX IS MINIMALLY SIZED 24"HIGH X 30"WIDE X 12"DEEP.
10. SURFACE MOUNT PROPOSED LIFT PUMP JUNCTION BOX "LS-LPJB-1" ON RACK PER DETAIL ON DRAWING NO. SE-19. PROPOSED JUNCTION BOX IS MINIMALLY SIZED 24"HIGH X 30"WIDE X 10"DEEP.
11. SURFACE MOUNT PROPOSED LIFT PUMP CONTROL JUNCTION BOX "LS-LPCS-1" ON RACK PER DETAIL ON DRAWING NO. SE-19. PROPOSED CONTROL PULLBOX IS MINIMALLY SIZED 24"HIGH X 32"WIDE X 10"DEEP.
12. SURFACE MOUNT PROPOSED LIFT STATION INSTRUMENT BOX "LS-IB-1" ON RACK PER DETAIL ON DRAWING NO. SE-19. INSTRUMENT BOX IS MINIMALLY SIZED 18"HIGH X 12"WIDE X 6"DEEP.
13. PROPOSED CONDUIT/WIRE "LS-LIT-200-I".
14. PROPOSED CONDUIT/WIRE "LS-LS-200-C".
15. PROPOSED LEVEL ELEMENT "LS-LE-200". CLOSELY AND CAREFULLY COORDINATE THE INSTALLATION OF PROPOSED LEVEL ELEMENT WITH THE MANUFACTURER. FURNISH AND INSTALL APPROVED WIRE MESH GRIP/EYEBOLT TO SUPPORT CABLE/STEEL CABLE AND MAKE ALL FINAL CONNECTIONS.
16. PROPOSED CONDUIT/WIRE "LS-LS-210-C" TO ROUTE TO/FROM INSTRUMENT BOX "LS-IB-1".
17. PROPOSED CONDUIT/WIRE "LS-LS-220-C" TO ROUTE TO/FROM INSTRUMENT BOX "LS-IB-1".
18. PROPOSED CONDUIT/WIRE "LS-LS-230-C" TO ROUTE TO/FROM INSTRUMENT BOX "LS-IB-1".

KEY NOTES

1. REFER TO DUCT BANK SECTION DEMOLITION SHEETS (05DE05) THROUGH (05DE08) FOR DEMOLITION DETAILS OF THE DUCT BANK CONTENTS.
2. DISCONNECT AND REMOVE ALL EXPOSED CONDUIT/WIRE IN ITS ENTIRETY.
3. DEMOLISH EQUIPMENT PAD IN ITS ENTIRETY. CUT CONDUITS A MINIMUM OF 6" BELOW GRADE AND SEAL WITH 50 YEAR NON SHRINK GROUT
4. DISCONNECT AND REMOVE PULLBOX IN ITS ENTIRETY.
5. COORDINATE DEMOLITION OF THE MOTORS WITH MECHANICAL.
6. CUT EMPTY EXPOSED CONDUITS ON THE LIFT STATION STRUCTURE AND MODIFY PER DETAIL E944/[00TE13].
7. DISCONNECT AND REMOVE THE LEVEL SWITCHES, LEVEL TRANSDUCER AND LEVEL INDICATING TRANSMITTER IN ITS ENTIRETY.
8. DISCONNECT AND REMOVE FIELD CONTROL STATION IN ITS ENTIRETY.

REUSE OF DOCUMENTS
This document and the ideas and designs incorporated herein as an instrument of professional service has been developed, designed and prepared by Harutunian Engineering, Inc. and is not to be used, in whole or part, for any other project without the written authorization of the City of Austin and Harutunian Engineering, Inc. © 2003

HARUTUNIAN ENGINEERING INCORPORATED
ENGINEERING AND ENVIRONMENTAL CONSULTANTS
303 EAST HUNTLAND DRIVE SUITE 500 AUSTIN, TEXAS 78752

NO.	DATE	REVISION	APPROV.
4			
3			
2			
1			

RECORD DRAWING
THIS CONSTRUCTION DOCUMENT WAS PREPARED USING INFORMATION SUPPLIED BY THE CONTRACTOR TO REPRESENT CONSTRUCTION CHANGES. THIS DOCUMENT IS FOR INFORMATION AND REFERENCE IN CONNECTION WITH THE OWNER'S USE AND OCCUPANCY OF THE PROJECT AND IS NOT INTENDED FOR BID, PERMIT OR CONSTRUCTION.
BY: K.A. Harutunian DATE: 1/6/2023

WARNING
0 1/2 1
IF THIS BAR DOES NOT MEASURE 1" THEN DRAWING IS NOT TO SCALE

K. A. HARUTUNIAN 59181 REGISTERED PROFESSIONAL ENGINEER 10/27/2003

Dwg. No. CE-3

CITY OF AUSTIN, TEXAS
NORTHEAST INTERIM WASTEWATER TREATMENT PLANT

LIFT STATION
I&C PLAN

Turner Collie & Braden Inc.
ENGINEERS • PLANNERS • PROJECT MANAGERS

Unit PUBLIC WORKS	Scale 1/2"=1'-0"	Date OCTOBER 2003	
Designed HEI	Checked HEI	Job No. 052-122094-0008	
Drawn HEI	Approved HEI	Sheet 92/327	

THIS CONFORMED DOCUMENT IS RELEASED FOR THE CONVENIENCE OF THE CONTRACTOR UNDER THE AUTHORITY OF:

K. A. Harutunian 11-01-22

K. A. HARUTUNIAN, P.E. DATE
TX LIC NO. 59181

SEE DISCLAIMER FOR LIMITATIONS OF USE.

CONTRACT DOCUMENTS DATED FEBRUARY 28, 2022, AS PART OF THE BIDDING DOCUMENTS (DRAWINGS AND SPECIFICATIONS) AND SUBSEQUENTLY ISSUED ADDENDA HAVE BEEN MERGED INTO ONE CONFORMING SET OF DOCUMENTS FOR THE CONVENIENCE OF THE CONTRACTOR. IF INCONSISTENCIES OR AMBIGUITIES BETWEEN "CONFORMED" DOCUMENTS AND CONTRACT DOCUMENTS ARE FOUND, THE CONTRACT DOCUMENTS SHALL GOVERN.

This document, and the designs incorporated herein, is an instrument of professional service that has been developed, designed and prepared by Harutunian Engineering, Inc., and is not to be used, in whole or in part, for any other project without giving written notice to Harutunian Engineering, Inc.

REV	DATE	BY	DESCRIPTION
			CONFORMED DOCUMENTS

DESIGNED HEI
DRAWN HEI
CHECKED HEI
DATE NOVEMBER 2022

** ORIGINAL SEALED BY K.A. HARUTUNIAN 02-28-22 TX PE 59181 **

HARUTUNIAN ENGINEERING INCORPORATED
ENGINEERING AND ENVIRONMENTAL CONSULTANTS
8100 CROSS PARK DRIVE AUSTIN, TEXAS 78754
TBPE REGISTRATION NO. F-2408

carollo® TBPELS No. F-882

CITY OF AUSTIN FOUNDED 1839

CITY OF AUSTIN

CITY OF AUSTIN
WILD HORSE RANCH WWTP EXPANSION
DEMOLITION
LIFT STATION
I&C PLAN - DEMOLITION

VERIFY SCALES
BAR IS ONE INCH ON ORIGINAL DRAWING
0 1"
IF NOT ONE INCH ON THIS SHEET, ADJUST SCALES ACCORDINGLY

JOB NO. 10976A.00
DRAWING NO. 10DE02
SHEET NO. 120 OF 464

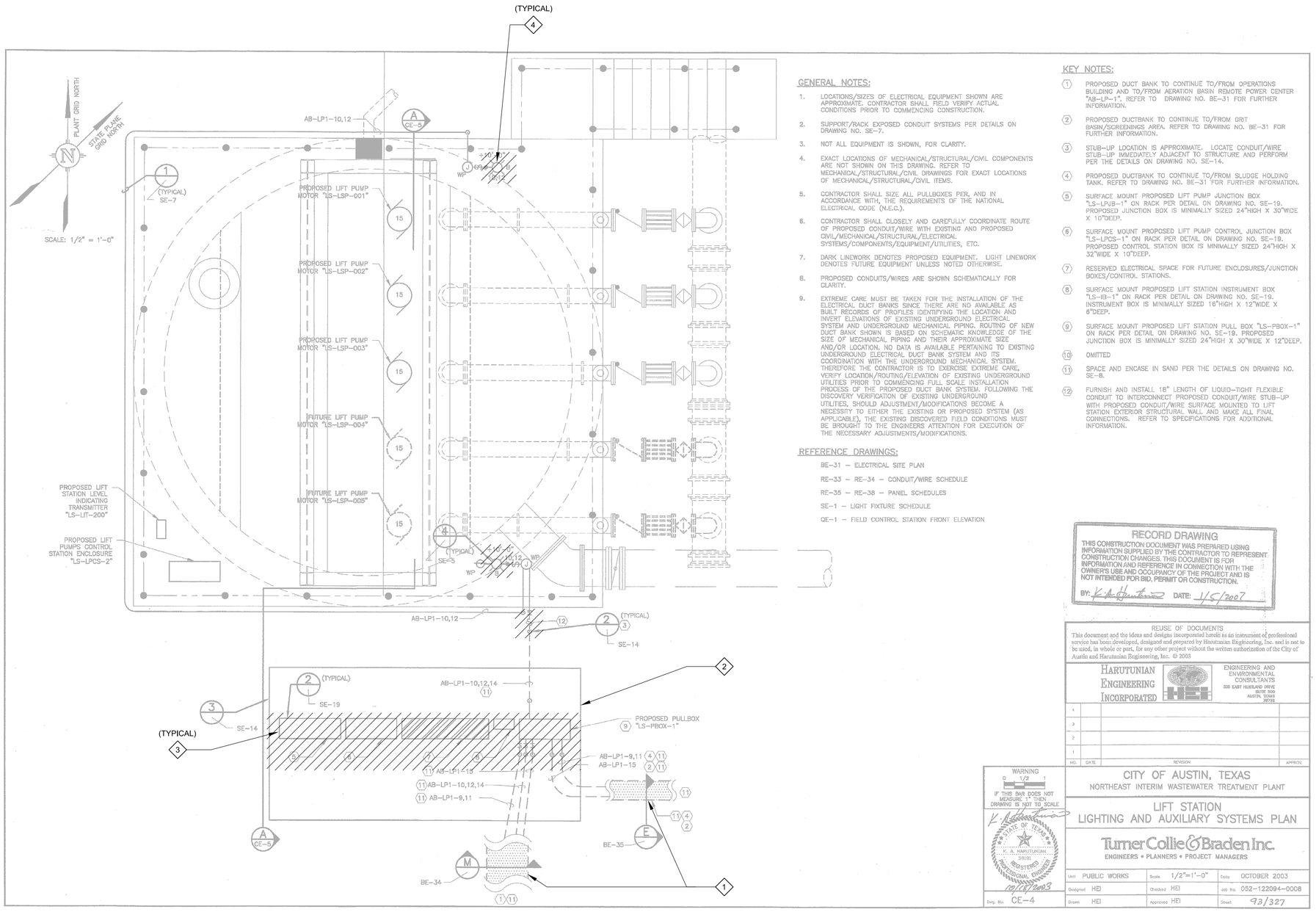

GENERAL NOTES:

1. LOCATIONS/SIZES OF ELECTRICAL EQUIPMENT SHOWN ARE APPROXIMATE. CONTRACTOR SHALL FIELD VERIFY ACTUAL CONDITIONS PRIOR TO COMMENCING CONSTRUCTION.
2. SUPPORT/RACK EXPOSED CONDUIT SYSTEMS PER DETAILS ON DRAWING NO. SE-7.
3. NOT ALL EQUIPMENT IS SHOWN, FOR CLARITY.
4. EXACT LOCATIONS OF MECHANICAL/STRUCTURAL/CIVIL COMPONENTS ARE NOT SHOWN ON THIS DRAWING. REFER TO MECHANICAL/STRUCTURAL/CIVIL DRAWINGS FOR EXACT LOCATIONS OF MECHANICAL/STRUCTURAL/CIVIL ITEMS.
5. CONTRACTOR SHALL SIZE ALL PULLBOXES PER, AND IN ACCORDANCE WITH, THE REQUIREMENTS OF THE NATIONAL ELECTRICAL CODE (N.E.C.).
6. CONTRACTOR SHALL CLOSELY AND CAREFULLY COORDINATE ROUTE OF PROPOSED CONDUIT/WIRE WITH EXISTING AND PROPOSED CIVIL/MECHANICAL/STRUCTURAL/ELECTRICAL SYSTEMS/COMPONENTS/EQUIPMENT/UTILITIES, ETC.
7. DARK LINEWORK DENOTES PROPOSED EQUIPMENT. LIGHT LINEWORK DENOTES FUTURE EQUIPMENT UNLESS NOTED OTHERWISE.
8. PROPOSED CONDUITS/WIRES ARE SHOWN SCHEMATICALLY FOR CLARITY.
9. EXTREME CARE MUST BE TAKEN FOR THE INSTALLATION OF THE ELECTRICAL DUCT BANKS SINCE THERE ARE NO AVAILABLE AS BUILT RECORDS OF PROFILES IDENTIFYING THE LOCATION AND INVERT ELEVATIONS OF EXISTING UNDERGROUND ELECTRICAL SYSTEM AND UNDERGROUND MECHANICAL PIPING. ROUTING OF NEW DUCT BANK SHOWN IS BASED ON SCHEMATIC KNOWLEDGE OF THE SIZE OF MECHANICAL PIPING AND THEIR APPROXIMATE SIZE AND/OR LOCATION. NO DATA IS AVAILABLE PERTAINING TO EXISTING UNDERGROUND ELECTRICAL DUCT BANK SYSTEM AND ITS COORDINATION WITH THE UNDERGROUND MECHANICAL SYSTEM. THEREFORE THE CONTRACTOR IS TO EXERCISE EXTREME CARE, VERIFY LOCATION/ROUTING/ELEVATION OF EXISTING UNDERGROUND UTILITIES PRIOR TO COMMENCING FULL SCALE INSTALLATION PROCESS OF THE PROPOSED DUCT BANK SYSTEM. FOLLOWING THE DISCOVERY VERIFICATION OF EXISTING UNDERGROUND UTILITIES, SHOULD ADJUSTMENT/MODIFICATIONS BECOME A NECESSITY TO EITHER THE EXISTING OR PROPOSED SYSTEM (AS APPLICABLE), THE EXISTING DISCOVERED FIELD CONDITIONS MUST BE BROUGHT TO THE ENGINEERS ATTENTION FOR EXECUTION OF THE NECESSARY ADJUSTMENTS/MODIFICATIONS.

REFERENCE DRAWINGS:

BE-31 – ELECTRICAL SITE PLAN
RE-33 – RE-34 – CONDUIT/WIRE SCHEDULE
RE-35 – RE-38 – PANEL SCHEDULES
SE-1 – LIGHT FIXTURE SCHEDULE
QE-1 – FIELD CONTROL STATION FRONT ELEVATION

KEY NOTES:

1. PROPOSED DUCT BANK TO CONTINUE TO/FROM OPERATIONS BUILDING AND TO/FROM AERATION BASIN REMOTE POWER CENTER "AB-LP-1", REFER TO DRAWING NO. BE-31 FOR FURTHER INFORMATION.
2. PROPOSED DUCTBANK TO CONTINUE TO/FROM GRIT BASIN/SCREENINGS AREA. REFER TO DRAWING NO. BE-31 FOR FURTHER INFORMATION.
3. STUB-UP LOCATION IS APPROXIMATE. LOCATE CONDUIT/WIRE STUB-UP IMMEDIATELY ADJACENT TO STRUCTURE AND PERFORM PER THE DETAILS ON DRAWING NO. SE-14.
4. PROPOSED DUCTBANK TO CONTINUE TO/FROM SLUDGE HOLDING TANK. REFER TO DRAWING NO. BE-31 FOR FURTHER INFORMATION.
5. SURFACE MOUNT PROPOSED LIFT PUMP JUNCTION BOX "LS-LPJB-1" ON RACK PER DETAIL ON DRAWING NO. SE-19. PROPOSED JUNCTION BOX IS MINIMALLY SIZED 24"HIGH X 30"WIDE X 10"DEEP.
6. SURFACE MOUNT PROPOSED LIFT PUMP CONTROL JUNCTION BOX "LS-LPCS-1" ON RACK PER DETAIL ON DRAWING NO. SE-19. PROPOSED CONTROL STATION BOX IS MINIMALLY SIZED 24"HIGH X 32"WIDE X 10"DEEP.
7. RESERVED ELECTRICAL SPACE FOR FUTURE ENCLOSURES/JUNCTION BOXES/CONTROL STATIONS.
8. SURFACE MOUNT PROPOSED LIFT STATION INSTRUMENT BOX "LS-IB-1" ON RACK PER DETAIL ON DRAWING NO. SE-19. INSTRUMENT BOX IS MINIMALLY SIZED 16"HIGH X 12"WIDE X 6"DEEP.
9. SURFACE MOUNT PROPOSED LIFT STATION PULL BOX "LS-PBOX-1" ON RACK PER DETAIL ON DRAWING NO. SE-19. PROPOSED JUNCTION BOX IS MINIMALLY SIZED 24"HIGH X 30"WIDE X 12"DEEP.
10. OMITTED
11. SPACE AND ENCASE IN SAND PER THE DETAILS ON DRAWING NO. SE-8.
12. FURNISH AND INSTALL 18" LENGTH OF LIQUID-TIGHT FLEXIBLE CONDUIT TO INTERCONNECT PROPOSED CONDUIT/WIRE STUB-UP WITH PROPOSED CONDUIT/WIRE SURFACE MOUNTED TO LIFT STATION EXTERIOR STRUCTURAL WALL AND MAKE ALL FINAL CONNECTIONS. REFER TO SPECIFICATIONS FOR ADDITIONAL INFORMATION.

KEY NOTES

1. REFER TO DUCT BANK SECTION DEMOLITION SHEETS (05DE05) THROUGH (05DE08) FOR DEMOLITION DETAILS OF THE DUCT BANK CONTENTS.
2. DEMOLISH EQUIPMENT PAD IN ITS ENTIRETY. CUT CONDUITS A MINIMUM OF 6" BELOW GRADE AND SEAL WITH 50 YEAR NON SHRINK GROUT
3. DISCONNECT AND REMOVE PULLBOX IN ITS ENTIRETY.
4. DISCONNECT AND REMOVE LIGHT FIXTURE. POLE AND SWITCH TO REMAIN AND BE REUSED DURING RENOVATION.

RECORD DRAWING
THIS CONSTRUCTION DOCUMENT WAS PREPARED USING INFORMATION SUPPLIED BY THE CONTRACTOR TO REPRESENT CONSTRUCTION CHANGES. THIS DOCUMENT IS FOR INFORMATION AND REFERENCE IN CONNECTION WITH THE OWNER'S USE AND OCCUPANCY OF THE PROJECT AND IS NOT INTENDED FOR BID, PERMIT OR CONSTRUCTION.
BY: K.A. Harutunian DATE: 1/5/2007

REUSE OF DOCUMENTS
This document and the ideas and designs incorporated herein as an instrument of professional service has been developed, designed and prepared by Harutunian Engineering, Inc. and is not to be used, in whole or part, for any other project without the written authorization of the City of Austin and Harutunian Engineering, Inc. © 2003

HARUTUNIAN ENGINEERING INCORPORATED
ENGINEERING AND ENVIRONMENTAL CONSULTANTS
335 EAST HUNDLAND DRIVE SUITE 300 AUSTIN, TEXAS 78745

NO.	DATE	REVISION	APPROV.
4			
3			
2			
1			

WARNING
0 1/2 1
IF THIS BAR DOES NOT MEASURE 1" THEN DRAWING IS NOT TO SCALE

K. A. HARUTUNIAN 59181 STATE OF TEXAS REGISTERED PROFESSIONAL ENGINEER 10/18/2003

CITY OF AUSTIN, TEXAS
NORTHEAST INTERIM WASTEWATER TREATMENT PLANT
LIFT STATION
LIGHTING AND AUXILIARY SYSTEMS PLAN
Turner Collie & Braden Inc.
ENGINEERS • PLANNERS • PROJECT MANAGERS

Unit PUBLIC WORKS	Scale 1/2"=1'-0"	Date OCTOBER 2003	
Designed HEI	Checked HEI	Job No. 052-122094-0008	
Drawn HEI	Approved HEI	Sheet 93/327	
Dwg. No. CE-4			

THIS CONFORMED DOCUMENT IS RELEASED FOR THE CONVENIENCE OF THE CONTRACTOR UNDER THE AUTHORITY OF:

K. A. Harutunian — 11-01-22
K. A. HARUTUNIAN, P.E. — DATE
TX LIC NO. 59181

SEE DISCLAIMER FOR LIMITATIONS OF USE.

CONTRACT DOCUMENTS DATED FEBRUARY 28, 2022, AS PART OF THE BIDDING DOCUMENTS (DRAWINGS AND SPECIFICATIONS) AND SUBSEQUENTLY ISSUED ADDENDA HAVE BEEN MERGED INTO ONE CONFORMING SET OF DOCUMENTS FOR THE CONVENIENCE OF THE CONTRACTOR. IF INCONSISTENCIES OR AMBIGUITIES BETWEEN "CONFORMED" DOCUMENTS AND CONTRACT DOCUMENTS ARE FOUND, THE CONTRACT DOCUMENTS SHALL GOVERN.

This document, and the designs incorporated herein, is an instrument of professional service that has been developed, designed and prepared by Harutunian Engineering, Inc., and is not to be used, in whole or in part, for any other project without giving written notice to Harutunian Engineering, Inc.

REV	DATE	BY	DESCRIPTION
			CONFORMED DOCUMENTS

DESIGNED HEI
DRAWN HEI
CHECKED HEI
DATE NOVEMBER 2022

** ORIGINAL SEALED BY K.A. HARUTUNIAN 02-28-22 TX PE 59181 **

HARUTUNIAN ENGINEERING INCORPORATED
ENGINEERING AND ENVIRONMENTAL CONSULTANTS
8100 CROSS PARK DRIVE AUSTIN, TEXAS 78754
TBPE REGISTRATION NO. F-2408

carollo
TBPELS No. F-882

CITY OF AUSTIN
FOUNDED 1839
CITY OF AUSTIN

CITY OF AUSTIN
WILD HORSE RANCH WWTP EXPANSION
DEMOLITION
LIFT STATION
AUXILIARY AND LIGHTING PLAN - DEMOLITION

VERIFY SCALES
BAR IS ONE INCH ON ORIGINAL DRAWING
0 1"
IF NOT ONE INCH ON THIS SHEET, ADJUST SCALES ACCORDINGLY

JOB NO. 10976A.00
DRAWING NO. 10DE03
SHEET NO. 121 OF 464

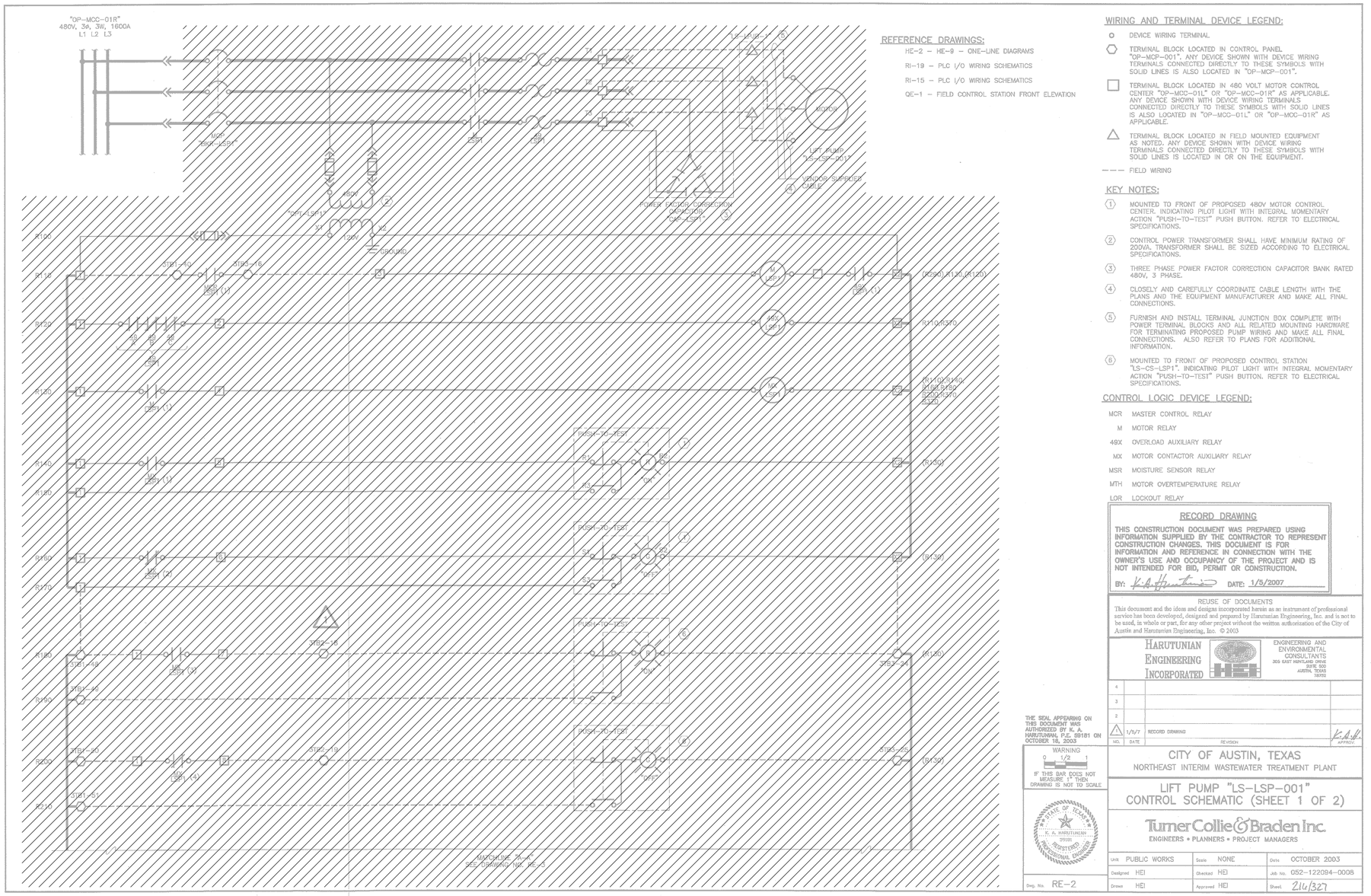

REFERENCE DRAWINGS:

HE-2 – HE-9 – ONE-LINE DIAGRAMS

RI-19 – PLC I/O WIRING SCHEMATICS

RI-15 – PLC I/O WIRING SCHEMATICS

QE-1 – FIELD CONTROL STATION FRONT ELEVATION

WIRING AND TERMINAL DEVICE LEGEND:

- ○ DEVICE WIRING TERMINAL
- ⬡ TERMINAL BLOCK LOCATED IN CONTROL PANEL "OP-MCP-001". ANY DEVICE SHOWN WITH DEVICE WIRING TERMINALS CONNECTED DIRECTLY TO THESE SYMBOLS WITH SOLID LINES IS ALSO LOCATED IN "OP-MCP-001".
- □ TERMINAL BLOCK LOCATED IN 480 VOLT MOTOR CONTROL CENTER "OP-MCC-01L" OR "OP-MCC-01R" AS APPLICABLE. ANY DEVICE SHOWN WITH DEVICE WIRING TERMINALS CONNECTED DIRECTLY TO THESE SYMBOLS WITH SOLID LINES IS ALSO LOCATED IN "OP-MCC-01L" OR "OP-MCC-01R" AS APPLICABLE.
- △ TERMINAL BLOCK LOCATED IN FIELD MOUNTED EQUIPMENT AS NOTED. ANY DEVICE SHOWN WITH DEVICE WIRING TERMINALS CONNECTED DIRECTLY TO THESE SYMBOLS WITH SOLID LINES IS LOCATED IN OR ON THE EQUIPMENT.
- – – – FIELD WIRING

KEY NOTES:

1. MOUNTED TO FRONT OF PROPOSED 480V MOTOR CONTROL CENTER. INDICATING PILOT LIGHT WITH INTEGRAL MOMENTARY ACTION "PUSH-TO-TEST" PUSH BUTTON. REFER TO ELECTRICAL SPECIFICATIONS.
2. CONTROL POWER TRANSFORMER SHALL HAVE MINIMUM RATING OF 200VA. TRANSFORMER SHALL BE SIZED ACCORDING TO ELECTRICAL SPECIFICATIONS.
3. THREE PHASE POWER FACTOR CORRECTION CAPACITOR BANK RATED 480V, 3 PHASE.
4. CLOSELY AND CAREFULLY COORDINATE CABLE LENGTH WITH THE PLANS AND THE EQUIPMENT MANUFACTURER AND MAKE ALL FINAL CONNECTIONS.
5. FURNISH AND INSTALL TERMINAL JUNCTION BOX COMPLETE WITH POWER TERMINAL BLOCKS AND ALL RELATED MOUNTING HARDWARE FOR TERMINATING PROPOSED PUMP WIRING AND MAKE ALL FINAL CONNECTIONS. ALSO REFER TO PLANS FOR ADDITIONAL INFORMATION.
6. MOUNTED TO FRONT OF PROPOSED CONTROL STATION "LS-CS-LSP1". INDICATING PILOT LIGHT WITH INTEGRAL MOMENTARY ACTION "PUSH-TO-TEST" PUSH BUTTON. REFER TO ELECTRICAL SPECIFICATIONS.

CONTROL LOGIC DEVICE LEGEND:

MCR	MASTER CONTROL RELAY
M	MOTOR RELAY
49X	OVERLOAD AUXILIARY RELAY
MX	MOTOR CONTACTOR AUXILIARY RELAY
MSR	MOISTURE SENSOR RELAY
MTH	MOTOR OVERTEMPERATURE RELAY
LOR	LOCKOUT RELAY

RECORD DRAWING

THIS CONSTRUCTION DOCUMENT WAS PREPARED USING INFORMATION SUPPLIED BY THE CONTRACTOR TO REPRESENT CONSTRUCTION CHANGES. THIS DOCUMENT IS FOR INFORMATION AND REFERENCE IN CONNECTION WITH THE OWNER'S USE AND OCCUPANCY OF THE PROJECT AND IS NOT INTENDED FOR BID, PERMIT OR CONSTRUCTION.

BY: K.A. Hartunian DATE: 1/5/2007

REUSE OF DOCUMENTS
This document and the ideas and designs incorporated herein as an instrument of professional service has been developed, designed and prepared by Harutunian Engineering, Inc. and is not to be used, in whole or part, for any other project without the written authorization of the City of Austin and Harutunian Engineering, Inc. © 2003

HARUTUNIAN ENGINEERING INCORPORATED
ENGINEERING AND ENVIRONMENTAL CONSULTANTS
205 EAST RENTLAND DRIVE
SUITE 500
AUSTIN, TEXAS
78758

NO.	DATE	REVISION	APPROV.
4			
3			
2			
1	1/5/7	RECORD DRAWING	K.A.H.

THE SEAL APPEARING ON THIS DOCUMENT WAS AUTHORIZED BY K. A. HARUTUNIAN, P.E. 59181 ON OCTOBER 16, 2003

WARNING
0 1/2 1
IF THIS BAR DOES NOT MEASURE 1" THEN DRAWING IS NOT TO SCALE

STATE OF TEXAS · K. A. HARUTUNIAN · 59181 · REGISTERED · PROFESSIONAL ENGINEER

Dwg. No. RE-2

CITY OF AUSTIN, TEXAS
NORTHEAST INTERIM WASTEWATER TREATMENT PLANT

LIFT PUMP "LS-LSP-001"
CONTROL SCHEMATIC (SHEET 1 OF 2)

Turner Collie & Braden Inc.
ENGINEERS • PLANNERS • PROJECT MANAGERS

Unit PUBLIC WORKS	Scale NONE	Date OCTOBER 2003	
Designed HEI	Checked HEI	Job No. 052-122094-0008	
Drawn HEI	Approved HEI	Sheet 216/327	

GENERAL NOTES:

1. DISCONNECT AND REMOVE EXISTING MCC MOTOR STARTER BUCKET, ASSOCIATED INTERCONNECT WIRING, FIELD WIRING, FIELD DEVICES, ETC. IN THEIR ENTIRETY. REFER TO ONE-LINES, ELEVATIONS AND PLAN DRAWINGS FOR ADDITIONAL INFORMATION.
2. DISCONNECT AND REMOVE THE EXISTING MAIN CONTROL PANEL INSTRUMENTATION AND CONTROL EQUIPMENT (I.E. TERMINAL BLOCKS, INTERCONNECT WIRING, CONTROL DEVICES, ETC.) IN THEIR ENTIRETY.
3. COORDINATE THE REQUIREMENTS OF THE DEMOLITION/RENOVATION DRAWINGS WITH THE EXISTING MOTOR CONTROL CENTER MANUFACTURER PRIOR TO PERFORMING AND DEMOLITION ACTIVITIES.
4. COORDINATE THE DEMOLITION OF THE MOTOR WITH PROCESS MECHANICAL.

THIS CONFORMED DOCUMENT IS RELEASED FOR THE CONVENIENCE OF THE CONTRACTOR UNDER THE AUTHORITY OF:

K. A. Hartunian — 11-01-22

K. A. HARUTUNIAN, P.E. — DATE
TX LIC NO. 59181

SEE DISCLAIMER FOR LIMITATIONS OF USE.

CONTRACT DOCUMENTS DATED FEBRUARY 28, 2022, AS PART OF THE BIDDING DOCUMENTS (DRAWINGS AND SPECIFICATIONS) AND SUBSEQUENTLY ISSUED ADDENDA HAVE BEEN MERGED INTO ONE CONFORMING SET OF DOCUMENTS FOR THE CONVENIENCE OF THE CONTRACTOR. IF INCONSISTENCIES OR AMBIGUITIES BETWEEN "CONFORMED" DOCUMENTS AND CONTRACT DOCUMENTS ARE FOUND, THE CONTRACT DOCUMENTS SHALL GOVERN.

This document, and the designs incorporated herein, is an instrument of professional service that has been developed, designed and prepared by Harutunian Engineering, Inc., and is not to be used, in whole or in part, for any other project without giving written notice to Harutunian Engineering, Inc.

REV	DATE	BY	DESCRIPTION
			CONFORMED DOCUMENTS

DESIGNED HEI
DRAWN HEI
CHECKED HEI
DATE NOVEMBER 2022

** ORIGINAL SEALED BY K.A. HARUTUNIAN 02-28-22 TX PE 59181 **

HARUTUNIAN ENGINEERING INCORPORATED
ENGINEERING AND ENVIRONMENTAL CONSULTANTS
8100 CROSS PARK DRIVE
AUSTIN, TEXAS 78754
TBPE REGISTRATION NO. F-2408

carollo
TBPELS No. F-882

CITY OF AUSTIN — FOUNDED 1839

CITY OF AUSTIN

CITY OF AUSTIN
WILD HORSE RANCH WWTP EXPANSION
DEMOLITION
LIFT PUMP NO. 1
CONTROL WIRING SCHEMATICS - DEMOLITION - 1

VERIFY SCALES
BAR IS ONE INCH ON ORIGINAL DRAWING
0 1"
IF NOT ONE INCH ON THIS SHEET, ADJUST SCALES ACCORDINGLY

JOB NO. 10976A.00
DRAWING NO. 10DN01
SHEET NO. 122 OF 464

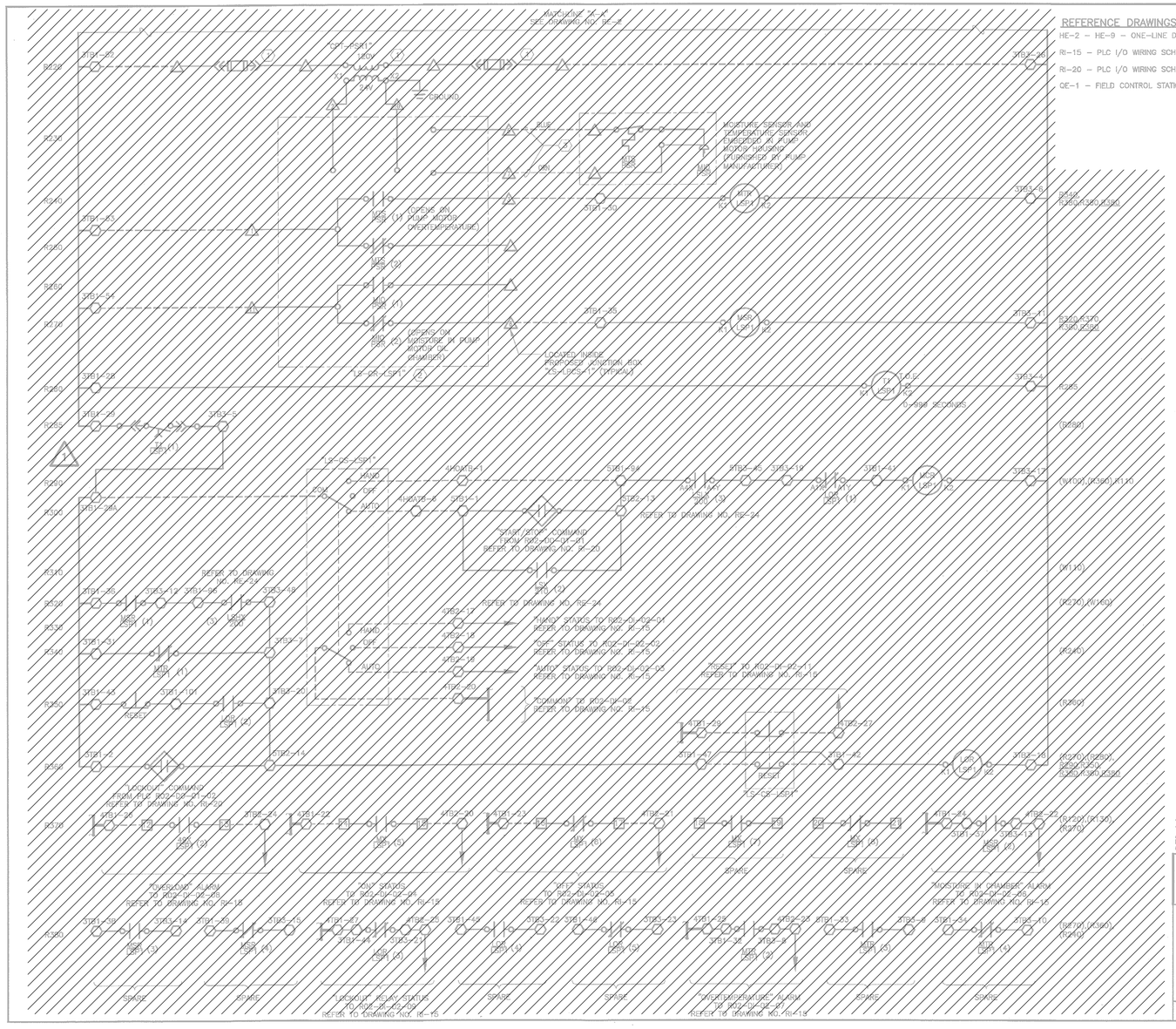

REFERENCE DRAWINGS:

HE-2 – HE-9 – ONE-LINE DIAGRAMS

RI-15 – PLC I/O WIRING SCHEMATICS

RI-20 – PLC I/O WIRING SCHEMATICS

OE-1 – FIELD CONTROL STATION FRONT ELEVATION

WIRING AND TERMINAL DEVICE LEGEND:

- DEVICE WIRING TERMINAL
- TERMINAL BLOCK LOCATED IN CONTROL PANEL "OP-MCP-001", ANY DEVICE SHOWN WITH DEVICE WIRING TERMINALS CONNECTED DIRECTLY TO THESE SYMBOLS WITH SOLID LINES IS ALSO LOCATED IN "OP-MCP-001".
- TERMINAL BLOCK LOCATED IN 480 VOLT MOTOR CONTROL CENTER "OP-MCC-01L" OR "OP-MCC-01R" AS APPLICABLE. ANY DEVICE SHOWN WITH DEVICE WIRING TERMINALS CONNECTED DIRECTLY TO THESE SYMBOLS WITH SOLID LINES IS ALSO LOCATED IN "OP-MCC-01L" OR "OP-MCC-01R" AS APPLICABLE.
- TERMINAL BLOCK LOCATED IN FIELD MOUNTED EQUIPMENT AS NOTED. ANY DEVICE SHOWN WITH DEVICE WIRING TERMINALS CONNECTED DIRECTLY TO THESE SYMBOLS WITH SOLID LINES IS LOCATED IN OR ON THE EQUIPMENT.
- FIELD WIRING

KEY NOTES:

1. FURNISH AND INSTALL CONTROL POWER TRANSFORMER WITH PRIMARY AND SECONDARY FUSES AS MANUFACTURED BY "SQUARE D", CLASS 9050, TYPE "TF50D23", 50VA RATING MINIMUM, INSIDE OF PROPOSED TERMINAL JUNCTION BOX "LS-LPCS-1" AND MAKE ALL FINAL CONNECTIONS. THE CONTRACTOR SHALL SIZE THE PROPOSED TRANSFORMER AND INTERCONNECTING FUSES PER THE REQUIREMENTS OF THE NATIONAL ELECTRIC CODE (N.E.C.). CLOSELY AND CAREFULLY COORDINATE WITH MECHANICAL.
2. MOISTURE SENSOR AND MOTOR TEMPERATURE INTERPOSING RELAY FURNISHED BY THE PUMP MANUFACTURER. INSTALL INSIDE PROPOSED TERMINAL JUNCTION BOX "LS-LPCS-1" AND MAKE ALL FINAL CONNECTIONS PER THE MANUFACTURER'S WIRING DIAGRAMS AND RECOMMENDATIONS.
3. FURNISHED BY PUMP MANUFACTURER. CLOSELY AND CAREFULLY COORDINATE LENGTH WITH THE PUMP MANUFACTURER AND MAKE ALL FINAL CONNECTIONS.

CONTROL LOGIC DEVICE LEGEND:

MCR	MASTER CONTROL RELAY
M	MOTOR RELAY
49X	OVERLOAD AUXILIARY RELAY
MX	MOTOR CONTACTOR AUXILIARY RELAY
MSR	MOISTURE SENSOR RELAY
MTH	MOTOR OVERTEMPERATURE RELAY
LOR	LOCKOUT RELAY

RECORD DRAWING

THIS CONSTRUCTION DOCUMENT WAS PREPARED USING INFORMATION SUPPLIED BY THE CONTRACTOR TO REPRESENT CONSTRUCTION CHANGES. THIS DOCUMENT IS FOR INFORMATION AND REFERENCE IN CONNECTION WITH THE OWNER'S USE AND OCCUPANCY OF THE PROJECT AND IS NOT INTENDED FOR BID, PERMIT OR CONSTRUCTION.

BY: K.A. Harutunian DATE: 1/5/2007

REUSE OF DOCUMENTS

This document and the ideas and designs incorporated herein as an instrument of professional service has been developed, designed and prepared by Harutunian Engineering, Inc. and is not to be used, in whole or part, for any other project without the written authorization of the City of Austin and Harutunian Engineering, Inc. © 2003

HARUTUNIAN ENGINEERING INCORPORATED

ENGINEERING AND ENVIRONMENTAL CONSULTANTS
209 EAST HIGHLAND DRIVE
SUITE 500
AUSTIN, TEXAS
78752

NO.	DATE	REVISION	APPROV.
4			
3			
2			
1	1/5/7	RECORD DRAWING	K.A.H.

THE SEAL APPEARING ON THIS DOCUMENT WAS AUTHORIZED BY K. A. HARUTUNIAN, P.E. 59181 ON OCTOBER 15, 2003

WARNING
0 1/2 1
IF THIS BAR DOES NOT MEASURE 1" THEN DRAWING IS NOT TO SCALE

STATE OF TEXAS
K. A. HARUTUNIAN
59181
REGISTERED
PROFESSIONAL ENGINEER

Dwg. No. RE-3

CITY OF AUSTIN, TEXAS
NORTHEAST INTERIM WASTEWATER TREATMENT PLANT

LIFT PUMP "LS-LSP-001"
CONTROL SCHEMATIC (SHEET 2 OF 2)

Turner Collie & Braden Inc.
ENGINEERS • PLANNERS • PROJECT MANAGERS

Unit PUBLIC WORKS	Scale NONE	Date OCTOBER 2003	
Designed HEI		Checked HEI	Job No. 052-122094-0008
Drawn HEI		Approved HEI	Sheet 217/327

GENERAL NOTES:

1. DISCONNECT AND REMOVE EXISTING MCC MOTOR STARTER BUCKET, ASSOCIATED INTERCONNECT WIRING, FIELD WIRING, FIELD DEVICES, ETC. IN THEIR ENTIRETY. REFER TO ONE-LINES, ELEVATIONS AND PLAN DRAWINGS FOR ADDITIONAL INFORMATION.
2. DISCONNECT AND REMOVE THE EXISTING MAIN CONTROL PANEL INSTRUMENTATION AND CONTROL EQUIPMENT (I.E. TERMINAL BLOCKS, INTERCONNECT WIRING, CONTROL DEVICES, ETC.) IN THEIR ENTIRETY.
3. COORDINATE THE REQUIREMENTS OF THE DEMOLITION/RENOVATION DRAWINGS WITH THE EXISTING MOTOR CONTROL CENTER MANUFACTURER PRIOR TO PERFORMING AND DEMOLITION ACTIVITIES.

THIS CONFORMED DOCUMENT IS RELEASED FOR THE CONVENIENCE OF THE CONTRACTOR UNDER THE AUTHORITY OF:

K. A. HARUTUNIAN, P.E. — 11-01-22
TX LIC NO. 59181 — DATE

SEE DISCLAIMER FOR LIMITATIONS OF USE.

CONTRACT DOCUMENTS DATED FEBRUARY 28, 2022, AS PART OF THE BIDDING DOCUMENTS (DRAWINGS AND SPECIFICATIONS) AND SUBSEQUENTLY ISSUED ADDENDA HAVE BEEN MERGED INTO ONE CONFORMING SET OF DOCUMENTS FOR THE CONVENIENCE OF THE CONTRACTOR. IF INCONSISTENCIES OR AMBIGUITIES BETWEEN "CONFORMED" DOCUMENTS AND CONTRACT DOCUMENTS ARE FOUND, THE CONTRACT DOCUMENTS SHALL GOVERN.

This document, and the designs incorporated herein, is an instrument of professional service that has been developed, designed and prepared by Harutunian Engineering, Inc., and is not to be used, in whole or in part, for any other project without giving written notice to Harutunian Engineering, Inc.

REV	DATE	BY	DESCRIPTION
			CONFORMED DOCUMENTS

DESIGNED HEI
DRAWN HEI
CHECKED HEI
DATE NOVEMBER 2022

** ORIGINAL SEALED BY K.A. HARUTUNIAN 02-28-22 TX PE 59181 **

HARUTUNIAN ENGINEERING INCORPORATED
ENGINEERING AND ENVIRONMENTAL CONSULTANTS
8100 CROSS PARK DRIVE, AUSTIN, TEXAS 78754 — TBPE REGISTRATION NO. F-2408

carollo — TBPELS No. F-882

CITY OF AUSTIN — FOUNDED 1839

CITY OF AUSTIN

CITY OF AUSTIN
WILD HORSE RANCH WWTP EXPANSION
DEMOLITION
LIFT PUMP NO. 1
CONTROL WIRING SCHEMATICS - DEMOLITION - 2

VERIFY SCALES
BAR IS ONE INCH ON ORIGINAL DRAWING
0 1"
IF NOT ONE INCH ON THIS SHEET, ADJUST SCALES ACCORDINGLY

JOB NO. 10976A.00
DRAWING NO. 10DN02
SHEET NO. 123 OF 464

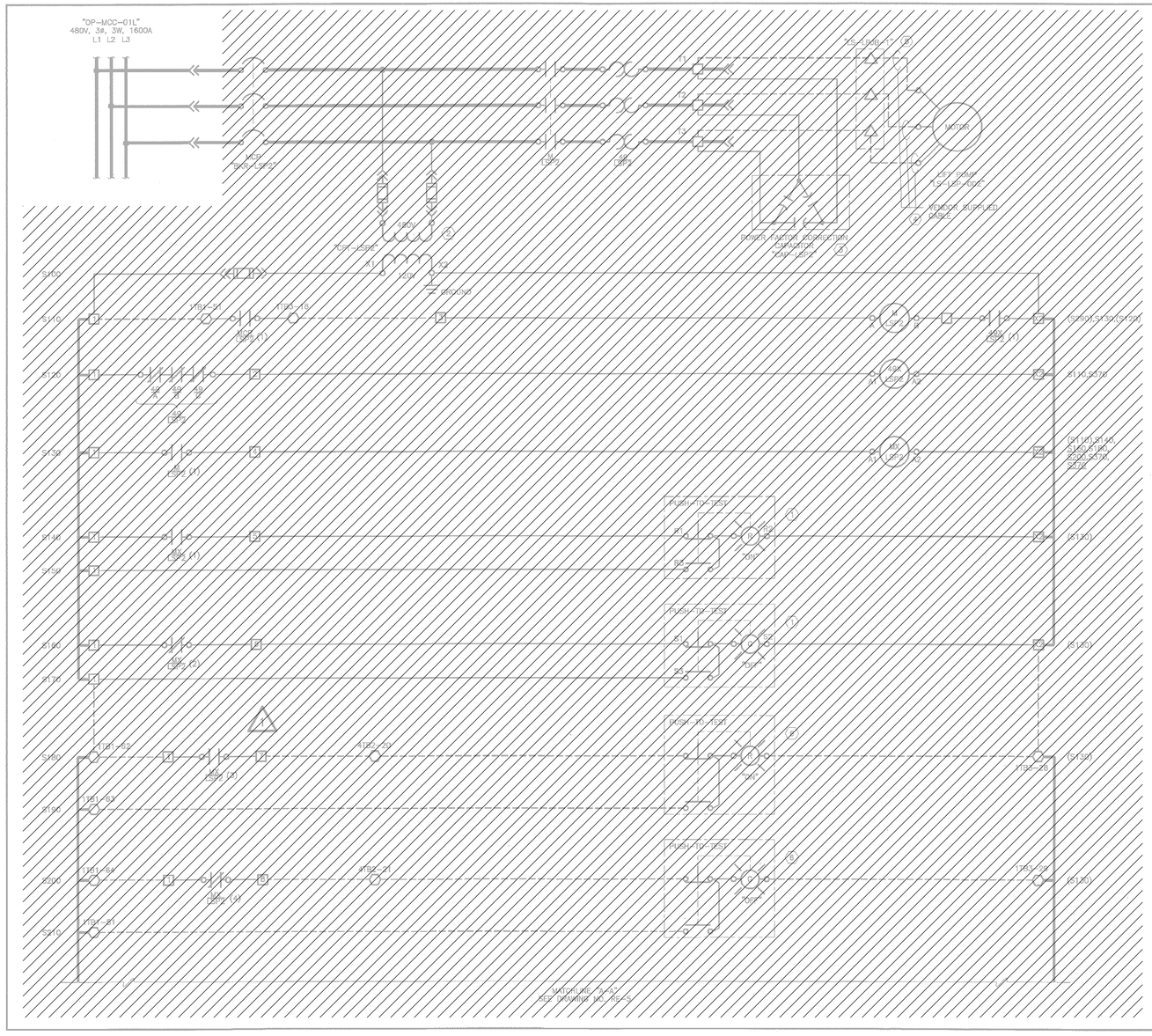
"OP-MCC-01L"
480V, 3ø, 3W, 1600A
L1 L2 L3
MCP
(LSP-LSP2)
480V
(LSP-LSP2)
POWER FACTOR CORRECTION CAPACITOR
(LSP-LSP2)
3
MOTOR
LS7 PUMP
(LS-LSP-002)
VENDOR SUPPLIED CABLE
6
M
(LSP2)
MX
(LSP2)
49X
(LSP2)
MSR
(LSP2)
MTH
(LSP2)
LOR
(LSP2)
PUSH-TO-TEST
PUSH-TO-RESET
30PB
(LSP2)
(S100)
(S110)
(S120)
(S130)
(S140)
(S150)
(S160)
(S170)
(S180)
(S190)
(S200)
(S210)
(S1701,S1702,S1703)
(S1704,S1705,S1706)
(S1707,S1708,S1709)
(S1710,S1711,S1712,S1713,S1714)
(S1715,S1716,S1717,S1718,S1719)
(S1720)
(S1721)
(S1722)
(S1723)
(S1724)
(S1725)
(S1726)
(S1727)
(S1728)
(S1729)
(S1730)
(S1731)
(S1732)
(S1733)
(S1734)
(S1735)
(S1736)
(S1737)
(S1738)
(S1739)
(S1740)
(S1741)
(S1742)
(S1743)
(S1744)
(S1745)
(S1746)
(S1747)
(S1748)
(S1749)
(S1750)
(S1751)
(S1752)
(S1753)
(S1754)
(S1755)
(S1756)
(S1757)
(S1758)
(S1759)

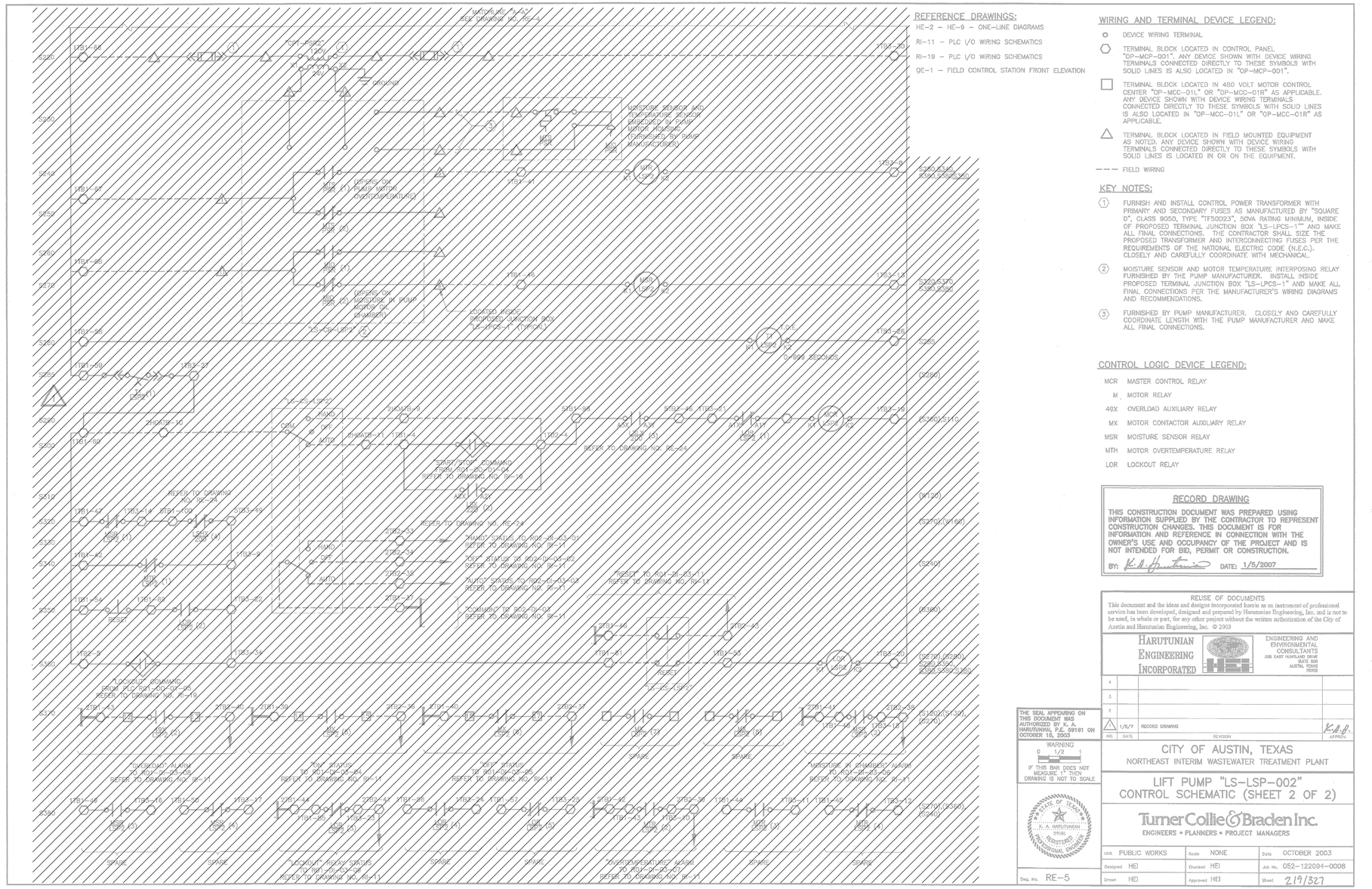

REFERENCE DRAWINGS:

HE-2 – HE-9 – ONE-LINE DIAGRAMS

RI-11 – PLC I/O WIRING SCHEMATICS

RI-19 – PLC I/O WIRING SCHEMATICS

QE-1 – FIELD CONTROL STATION FRONT ELEVATION

WIRING AND TERMINAL DEVICE LEGEND:

- DEVICE WIRING TERMINAL
- TERMINAL BLOCK LOCATED IN CONTROL PANEL "OP-MCP-001". ANY DEVICE SHOWN WITH DEVICE WIRING TERMINALS CONNECTED DIRECTLY TO THESE SYMBOLS WITH SOLID LINES IS ALSO LOCATED IN "OP-MCP-001".
- TERMINAL BLOCK LOCATED IN 480 VOLT MOTOR CONTROL CENTER "OP-MCC-01L" OR "OP-MCC-01R" AS APPLICABLE. ANY DEVICE SHOWN WITH DEVICE WIRING TERMINALS CONNECTED DIRECTLY TO THESE SYMBOLS WITH SOLID LINES IS ALSO LOCATED IN "OP-MCC-01L" OR "OP-MCC-01R" AS APPLICABLE.
- TERMINAL BLOCK LOCATED IN FIELD MOUNTED EQUIPMENT AS NOTED. ANY DEVICE SHOWN WITH DEVICE WIRING TERMINALS CONNECTED DIRECTLY TO THESE SYMBOLS WITH SOLID LINES IS LOCATED IN OR ON THE EQUIPMENT.
- – – – FIELD WIRING

KEY NOTES:

1. FURNISH AND INSTALL CONTROL POWER TRANSFORMER WITH PRIMARY AND SECONDARY FUSES AS MANUFACTURED BY "SQUARE D", CLASS 9050, TYPE "TF50D23", 50VA RATING MINIMUM, INSIDE OF PROPOSED TERMINAL JUNCTION BOX "LS-LPCS-1" AND MAKE ALL FINAL CONNECTIONS. THE CONTRACTOR SHALL SIZE THE PROPOSED TRANSFORMER AND INTERCONNECTING FUSES PER THE REQUIREMENTS OF THE NATIONAL ELECTRIC CODE (N.E.C.). CLOSELY AND CAREFULLY COORDINATE WITH MECHANICAL.
2. MOISTURE SENSOR AND MOTOR TEMPERATURE INTERPOSING RELAY FURNISHED BY THE PUMP MANUFACTURER. INSTALL INSIDE PROPOSED TERMINAL JUNCTION BOX "LS-LPCS-1" AND MAKE ALL FINAL CONNECTIONS PER THE MANUFACTURER'S WIRING DIAGRAMS AND RECOMMENDATIONS.
3. FURNISHED BY PUMP MANUFACTURER. CLOSELY AND CAREFULLY COORDINATE LENGTH WITH THE PUMP MANUFACTURER AND MAKE ALL FINAL CONNECTIONS.

CONTROL LOGIC DEVICE LEGEND:

MCR	MASTER CONTROL RELAY
M	MOTOR RELAY
49X	OVERLOAD AUXILIARY RELAY
MX	MOTOR CONTACTOR AUXILIARY RELAY
MSR	MOISTURE SENSOR RELAY
MTH	MOTOR OVERTEMPERATURE RELAY
LOR	LOCKOUT RELAY

RECORD DRAWING

THIS CONSTRUCTION DOCUMENT WAS PREPARED USING INFORMATION SUPPLIED BY THE CONTRACTOR TO REPRESENT CONSTRUCTION CHANGES. THIS DOCUMENT IS FOR INFORMATION AND REFERENCE IN CONNECTION WITH THE OWNER'S USE AND OCCUPANCY OF THE PROJECT AND IS NOT INTENDED FOR BID, PERMIT OR CONSTRUCTION.

BY: K. A. Harutunian DATE: 1/5/2007

REUSE OF DOCUMENTS
This document and the ideas and designs incorporated herein as an instrument of professional service has been developed, designed and prepared by Harutunian Engineering, Inc. and is not to be used, in whole or part, for any other project without the written authorization of the City of Austin and Harutunian Engineering, Inc. © 2003

HARUTUNIAN ENGINEERING INCORPORATED
ENGINEERING AND ENVIRONMENTAL CONSULTANTS
2616 EAST MARTLAND DRIVE
SUITE 500
AUSTIN, TEXAS
78722

NO.	DATE	REVISION	APPROV.
4			
3			
2			
1	1/5/7	RECORD DRAWING	K.A.H.

THE SEAL APPEARING ON THIS DOCUMENT WAS AUTHORIZED BY K. A. HARUTUNIAN, P.E. 59181 ON OCTOBER 16, 2003

WARNING
0 1/2 1
IF THIS BAR DOES NOT MEASURE 1" THEN DRAWING IS NOT TO SCALE

STATE OF TEXAS · K. A. HARUTUNIAN · 59181 · REGISTERED · PROFESSIONAL ENGINEER

Dsg. Ms. RE-5

CITY OF AUSTIN, TEXAS
NORTHEAST INTERIM WASTEWATER TREATMENT PLANT

LIFT PUMP "LS-LSP-002"
CONTROL SCHEMATIC (SHEET 2 OF 2)

Turner Collie & Braden Inc.
ENGINEERS • PLANNERS • PROJECT MANAGERS

Unit PUBLIC WORKS	Scale NONE	Date OCTOBER 2003	
Designed HEI	Checked HEI	Job No. 052-122094-0008	
Drawn HEI	Approved HEI	Sheet 219/327	

GENERAL NOTES:

1. DISCONNECT AND REMOVE EXISTING MCC MOTOR STARTER BUCKET, ASSOCIATED INTERCONNECT WIRING, FIELD WIRING, FIELD DEVICES, ETC. IN THEIR ENTIRETY. REFER TO ONE-LINES, ELEVATIONS AND PLAN DRAWINGS FOR ADDITIONAL INFORMATION.
2. DISCONNECT AND REMOVE THE EXISTING MAIN CONTROL PANEL INSTRUMENTATION AND CONTROL EQUIPMENT (I.E. TERMINAL BLOCKS, INTERCONNECT WIRING, CONTROL DEVICES, ETC.) IN THEIR ENTIRETY.
3. COORDINATE THE REQUIREMENTS OF THE DEMOLITION/RENOVATION DRAWINGS WITH THE EXISTING MOTOR CONTROL CENTER MANUFACTURER PRIOR TO PERFORMING AND DEMOLITION ACTIVITIES.

THIS CONFORMED DOCUMENT IS RELEASED FOR THE CONVENIENCE OF THE CONTRACTOR UNDER THE AUTHORITY OF:

K. A. Harutunian — 11-01-22

K. A. HARUTUNIAN, P.E. — DATE
TX LIC NO. 59181

SEE DISCLAIMER FOR LIMITATIONS OF USE.

CONTRACT DOCUMENTS DATED FEBRUARY 28, 2022, AS PART OF THE BIDDING DOCUMENTS (DRAWINGS AND SPECIFICATIONS) AND SUBSEQUENTLY ISSUED ADDENDA HAVE BEEN MERGED INTO ONE CONFORMING SET OF DOCUMENTS FOR THE CONVENIENCE OF THE CONTRACTOR. IF INCONSISTENCIES OR AMBIGUITIES BETWEEN "CONFORMED" DOCUMENTS AND CONTRACT DOCUMENTS ARE FOUND, THE CONTRACT DOCUMENTS SHALL GOVERN.

This document, and the designs incorporated herein, is an instrument of professional service that has been developed, designed and prepared by Harutunian Engineering, Inc., and is not to be used, in whole or in part, for any other project without giving written notice to Harutunian Engineering, Inc.

REV	DATE	BY	DESCRIPTION
			CONFORMED DOCUMENTS

DESIGNED HEI
DRAWN HEI
CHECKED HEI
DATE NOVEMBER 2022

** ORIGINAL SEALED BY K.A. HARUTUNIAN 02-28-22 TX PE 59181 **

HARUTUNIAN ENGINEERING INCORPORATED
ENGINEERING AND ENVIRONMENTAL CONSULTANTS
8100 CROSS PARK DRIVE
AUSTIN, TEXAS 78754
TBPE REGISTRATION NO. F-2408

carollo
TBPELS No. F-882

CITY OF AUSTIN
FOUNDED 1839

CITY OF AUSTIN

CITY OF AUSTIN
WILD HORSE RANCH WWTP EXPANSION
DEMOLITION
LIFT PUMP NO. 2
CONTROL WIRING SCHEMATICS - DEMOLITION - 2

VERIFY SCALES
BAR IS ONE INCH ON ORIGINAL DRAWING
0 1"
IF NOT ONE INCH ON THIS SHEET, ADJUST SCALES ACCORDINGLY

JOB NO. 10976A.00
DRAWING NO. 10DN04
SHEET NO. 125 OF 464

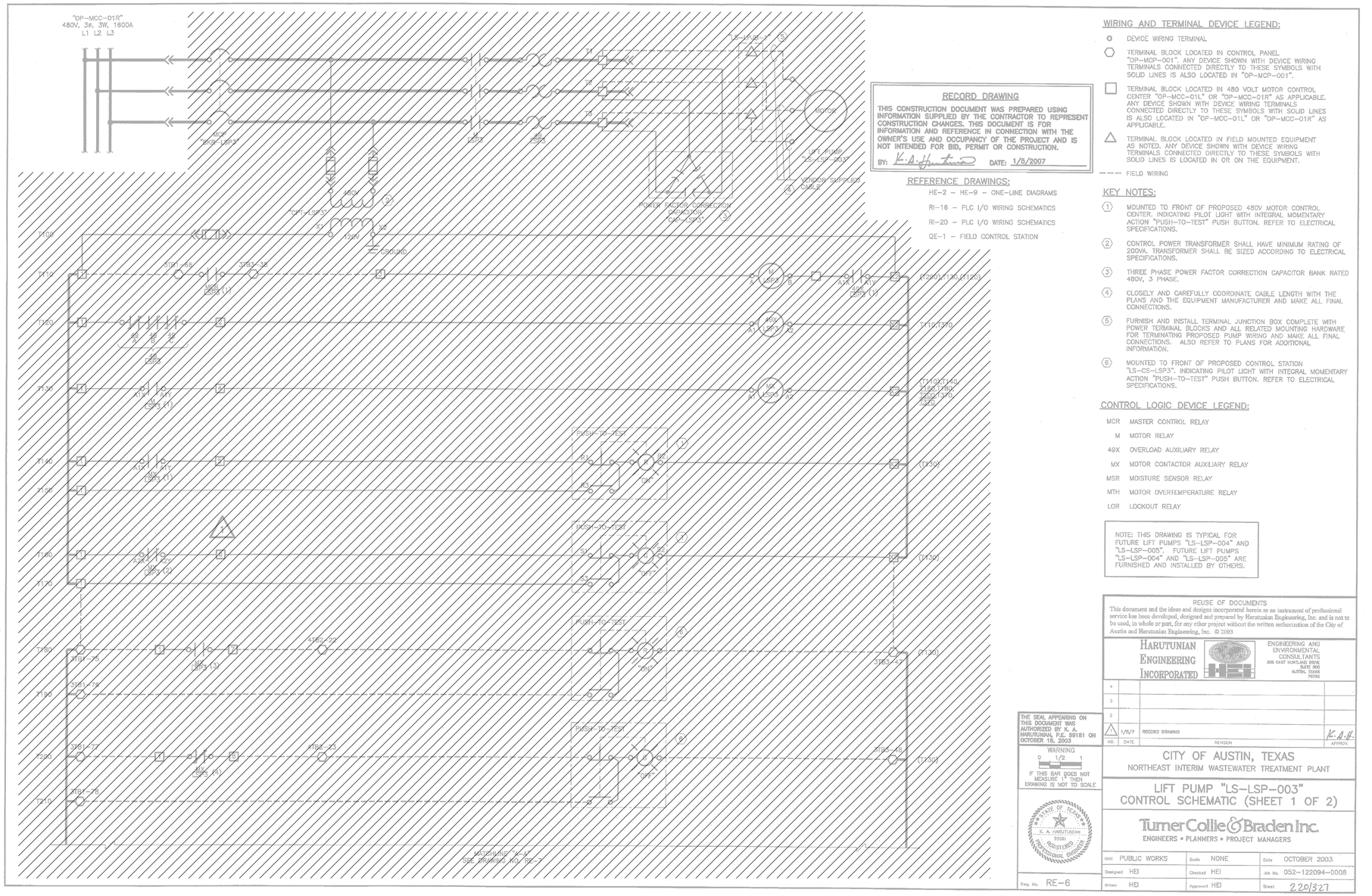

RECORD DRAWING

THIS CONSTRUCTION DOCUMENT WAS PREPARED USING INFORMATION SUPPLIED BY THE CONTRACTOR TO REPRESENT CONSTRUCTION CHANGES. THIS DOCUMENT IS FOR INFORMATION AND REFERENCE IN CONNECTION WITH THE OWNER'S USE AND OCCUPANCY OF THE PROJECT AND IS NOT INTENDED FOR BID, PERMIT OR CONSTRUCTION.

BY: K.A. Harutunian DATE: 1/5/2007

REFERENCE DRAWINGS:

HE-2 – HE-9 – ONE-LINE DIAGRAMS
RI-16 – PLC I/O WIRING SCHEMATICS
RI-20 – PLC I/O WIRING SCHEMATICS
QE-1 – FIELD CONTROL STATION

WIRING AND TERMINAL DEVICE LEGEND:

- DEVICE WIRING TERMINAL
- TERMINAL BLOCK LOCATED IN CONTROL PANEL "OP-MCP-001". ANY DEVICE SHOWN WITH DEVICE WIRING TERMINALS CONNECTED DIRECTLY TO THESE SYMBOLS WITH SOLID LINES IS ALSO LOCATED IN "OP-MCP-001".
- TERMINAL BLOCK LOCATED IN 480 VOLT MOTOR CONTROL CENTER "OP-MCC-01L" OR "OP-MCC-01R" AS APPLICABLE. ANY DEVICE SHOWN WITH DEVICE WIRING TERMINALS CONNECTED DIRECTLY TO THESE SYMBOLS WITH SOLID LINES IS ALSO LOCATED IN "OP-MCC-01L" OR "OP-MCC-01R" AS APPLICABLE.
- TERMINAL BLOCK LOCATED IN FIELD MOUNTED EQUIPMENT AS NOTED. ANY DEVICE SHOWN WITH DEVICE WIRING TERMINALS CONNECTED DIRECTLY TO THESE SYMBOLS WITH SOLID LINES IS LOCATED IN OR ON THE EQUIPMENT.
- FIELD WIRING

KEY NOTES:

1. MOUNTED TO FRONT OF PROPOSED 480V MOTOR CONTROL CENTER. INDICATING PILOT LIGHT WITH INTEGRAL MOMENTARY ACTION "PUSH-TO-TEST" PUSH BUTTON. REFER TO ELECTRICAL SPECIFICATIONS.
2. CONTROL POWER TRANSFORMER SHALL HAVE MINIMUM RATING OF 200VA. TRANSFORMER SHALL BE SIZED ACCORDING TO ELECTRICAL SPECIFICATIONS.
3. THREE PHASE POWER FACTOR CORRECTION CAPACITOR BANK RATED 480V, 3 PHASE.
4. CLOSELY AND CAREFULLY COORDINATE CABLE LENGTH WITH THE PLANS AND THE EQUIPMENT MANUFACTURER AND MAKE ALL FINAL CONNECTIONS.
5. FURNISH AND INSTALL TERMINAL JUNCTION BOX COMPLETE WITH POWER TERMINAL BLOCKS AND ALL RELATED MOUNTING HARDWARE FOR TERMINATING PROPOSED PUMP WIRING AND MAKE ALL FINAL CONNECTIONS. ALSO REFER TO PLANS FOR ADDITIONAL INFORMATION.
6. MOUNTED TO FRONT OF PROPOSED CONTROL STATION "LS-CS-LSP3". INDICATING PILOT LIGHT WITH INTEGRAL MOMENTARY ACTION "PUSH-TO-TEST" PUSH BUTTON. REFER TO ELECTRICAL SPECIFICATIONS.

CONTROL LOGIC DEVICE LEGEND:

MCR	MASTER CONTROL RELAY
M	MOTOR RELAY
49X	OVERLOAD AUXILIARY RELAY
MX	MOTOR CONTACTOR AUXILIARY RELAY
MSR	MOISTURE SENSOR RELAY
MTH	MOTOR OVERTEMPERATURE RELAY
LOR	LOCKOUT RELAY

NOTE: THIS DRAWING IS TYPICAL FOR FUTURE LIFT PUMPS "LS-LSP-004" AND "LS-LSP-005". FUTURE LIFT PUMPS "LS-LSP-004" AND "LS-LSP-005" ARE FURNISHED AND INSTALLED BY OTHERS.

GENERAL NOTES:

1. DISCONNECT AND REMOVE EXISTING MCC MOTOR STARTER BUCKET, ASSOCIATED INTERCONNECT WIRING, FIELD WIRING, FIELD DEVICES, ETC. IN THEIR ENTIRETY. REFER TO ONE-LINES, ELEVATIONS AND PLAN DRAWINGS FOR ADDITIONAL INFORMATION.
2. DISCONNECT AND REMOVE THE EXISTING MAIN CONTROL PANEL INSTRUMENTATION AND CONTROL EQUIPMENT (I.E. TERMINAL BLOCKS, INTERCONNECT WIRING, CONTROL DEVICES, ETC.) IN THEIR ENTIRETY.
3. COORDINATE THE REQUIREMENTS OF THE DEMOLITION/RENOVATION DRAWINGS WITH THE EXISTING MOTOR CONTROL CENTER MANUFACTURER PRIOR TO PERFORMING AND DEMOLITION ACTIVITIES.
4. COORDINATE THE DEMOLITION OF THE MOTOR WITH PROCESS MECHANICAL.

REUSE OF DOCUMENTS
This document and the ideas and designs incorporated herein as an instrument of professional service has been developed, designed and prepared by Harutunian Engineering, Inc. and is not to be used, in whole or part, for any other project without the written authorization of the City of Austin and Harutunian Engineering, Inc. © 2003

HARUTUNIAN ENGINEERING INCORPORATED
ENGINEERING AND ENVIRONMENTAL CONSULTANTS
305 EAST HUNTLAND DRIVE SUITE 300 AUSTIN, TEXAS 78752

NO.	DATE	REVISION	APPROV.
4			
3			
2			
1	1/5/7	RECORD DRAWING	K.A.H.

THE SEAL APPEARING ON THIS DOCUMENT WAS AUTHORIZED BY K. A. HARUTUNIAN, P.E. 59181 ON OCTOBER 16, 2003

WARNING
0 1/2 1
IF THIS BAR DOES NOT MEASURE 1" THEN DRAWING IS NOT TO SCALE

STATE OF TEXAS K. A. HARUTUNIAN 59181 REGISTERED PROFESSIONAL ENGINEER

Dwg. No. RE-6

CITY OF AUSTIN, TEXAS
NORTHEAST INTERIM WASTEWATER TREATMENT PLANT

LIFT PUMP "LS-LSP-003"
CONTROL SCHEMATIC (SHEET 1 OF 2)

Turner Collie & Braden Inc.
ENGINEERS • PLANNERS • PROJECT MANAGERS

Unit PUBLIC WORKS	Scale NONE	Date OCTOBER 2003	
Designed HEI	Checked HEI	Job No. 052-122094-0008	
Drawn HEI	Approved HEI	Sheet 220/327	

THIS CONFORMED DOCUMENT IS RELEASED FOR THE CONVENIENCE OF THE CONTRACTOR UNDER THE AUTHORITY OF:

K. A. Harutunian — 11-01-22

K. A. HARUTUNIAN, P.E. — DATE
TX LIC NO. 59181

SEE DISCLAIMER FOR LIMITATIONS OF USE.

CONTRACT DOCUMENTS DATED FEBRUARY 28, 2022, AS PART OF THE BIDDING DOCUMENTS (DRAWINGS AND SPECIFICATIONS) AND SUBSEQUENTLY ISSUED ADDENDA HAVE BEEN MERGED INTO ONE CONFORMING SET OF DOCUMENTS FOR THE CONVENIENCE OF THE CONTRACTOR. IF INCONSISTENCIES OR AMBIGUITIES BETWEEN "CONFORMED" DOCUMENTS AND CONTRACT DOCUMENTS ARE FOUND, THE CONTRACT DOCUMENTS SHALL GOVERN.

This document, and the designs incorporated herein, is an instrument of professional service that has been developed, designed and prepared by Harutunian Engineering, Inc., and is not to be used, in whole or in part, for any other project without giving written notice to Harutunian Engineering, Inc.

REV	DATE	BY	DESCRIPTION
			CONFORMED DOCUMENTS

DESIGNED HEI
DRAWN HEI
CHECKED HEI
DATE NOVEMBER 2022

** ORIGINAL SEALED BY K.A. HARUTUNIAN 02-28-22 TX PE 59181 **

HARUTUNIAN ENGINEERING INCORPORATED
ENGINEERING AND ENVIRONMENTAL CONSULTANTS
8100 CROSS PARK DRIVE AUSTIN, TEXAS 78754
TBPE REGISTRATION NO. F-2408

carollo® TBPELS No. F-882

CITY OF AUSTIN FOUNDED 1839

CITY OF AUSTIN

CITY OF AUSTIN
WILD HORSE RANCH WWTP EXPANSION
DEMOLITION
LIFT PUMP NO. 3
CONTROL WIRING SCHEMATICS - DEMOLITION - 1

VERIFY SCALES
BAR IS ONE INCH ON ORIGINAL DRAWING
0 1"
IF NOT ONE INCH ON THIS SHEET, ADJUST SCALES ACCORDINGLY

JOB NO. 10976A.00
DRAWING NO. 10DN05
SHEET NO. 126 OF 464

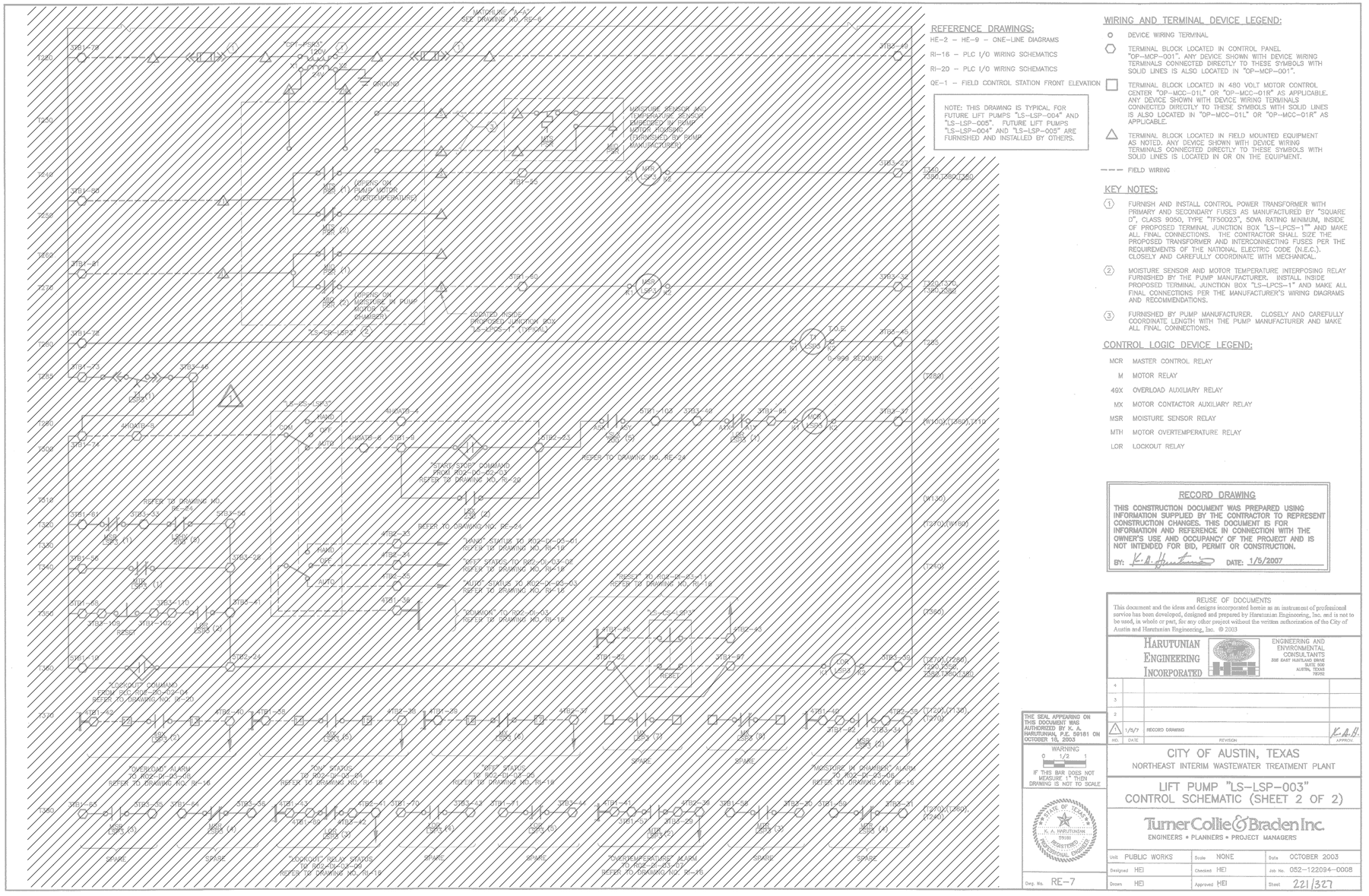

REFERENCE DRAWINGS:

HE-2 – HE-9 – ONE-LINE DIAGRAMS

RI-16 – PLC I/O WIRING SCHEMATICS

RI-20 – PLC I/O WIRING SCHEMATICS

QE-1 – FIELD CONTROL STATION FRONT ELEVATION

NOTE: THIS DRAWING IS TYPICAL FOR FUTURE LIFT PUMPS "LS-LSP-004" AND "LS-LSP-005". FUTURE LIFT PUMPS "LS-LSP-004" AND "LS-LSP-005" ARE FURNISHED AND INSTALLED BY OTHERS.

WIRING AND TERMINAL DEVICE LEGEND:

- ○ DEVICE WIRING TERMINAL
- ⬡ TERMINAL BLOCK LOCATED IN CONTROL PANEL "OP-MCP-001", ANY DEVICE SHOWN WITH DEVICE WIRING TERMINALS CONNECTED DIRECTLY TO THESE SYMBOLS WITH SOLID LINES IS ALSO LOCATED IN "OP-MCP-001".
- □ TERMINAL BLOCK LOCATED IN 480 VOLT MOTOR CONTROL CENTER "OP-MCC-01L" OR "OP-MCC-01R" AS APPLICABLE. ANY DEVICE SHOWN WITH DEVICE WIRING TERMINALS CONNECTED DIRECTLY TO THESE SYMBOLS WITH SOLID LINES IS ALSO LOCATED IN "OP-MCC-01L" OR "OP-MCC-01R" AS APPLICABLE.
- △ TERMINAL BLOCK LOCATED IN FIELD MOUNTED EQUIPMENT AS NOTED. ANY DEVICE SHOWN WITH DEVICE WIRING TERMINALS CONNECTED DIRECTLY TO THESE SYMBOLS WITH SOLID LINES IS LOCATED IN OR ON THE EQUIPMENT.
- – – – FIELD WIRING

KEY NOTES:

1. FURNISH AND INSTALL CONTROL POWER TRANSFORMER WITH PRIMARY AND SECONDARY FUSES AS MANUFACTURED BY "SQUARE D", CLASS 9050, TYPE "TF50D23", 50VA RATING MINIMUM, INSIDE OF PROPOSED TERMINAL JUNCTION BOX "LS-LPCS-1" AND MAKE ALL FINAL CONNECTIONS. THE CONTRACTOR SHALL SIZE THE PROPOSED TRANSFORMER AND INTERCONNECTING FUSES PER THE REQUIREMENTS OF THE NATIONAL ELECTRIC CODE (N.E.C.). CLOSELY AND CAREFULLY COORDINATE WITH MECHANICAL.
2. MOISTURE SENSOR AND MOTOR TEMPERATURE INTERPOSING RELAY FURNISHED BY THE PUMP MANUFACTURER. INSTALL INSIDE PROPOSED TERMINAL JUNCTION BOX "LS-LPCS-1" AND MAKE ALL FINAL CONNECTIONS PER THE MANUFACTURER'S WIRING DIAGRAMS AND RECOMMENDATIONS.
3. FURNISHED BY PUMP MANUFACTURER. CLOSELY AND CAREFULLY COORDINATE LENGTH WITH THE PUMP MANUFACTURER AND MAKE ALL FINAL CONNECTIONS.

CONTROL LOGIC DEVICE LEGEND:

MCR	MASTER CONTROL RELAY
M	MOTOR RELAY
49X	OVERLOAD AUXILIARY RELAY
MX	MOTOR CONTACTOR AUXILIARY RELAY
MSR	MOISTURE SENSOR RELAY
MTH	MOTOR OVERTEMPERATURE RELAY
LOR	LOCKOUT RELAY

RECORD DRAWING

THIS CONSTRUCTION DOCUMENT WAS PREPARED USING INFORMATION SUPPLIED BY THE CONTRACTOR TO REPRESENT CONSTRUCTION CHANGES. THIS DOCUMENT IS FOR INFORMATION AND REFERENCE IN CONNECTION WITH THE OWNER'S USE AND OCCUPANCY OF THE PROJECT AND IS NOT INTENDED FOR BID, PERMIT OR CONSTRUCTION.

BY: K. A. Harutunian DATE: 1/5/2007

REUSE OF DOCUMENTS
This document and the ideas and designs incorporated herein as an instrument of professional service has been developed, designed and prepared by Harutunian Engineering, Inc. and is not to be used, in whole or part, for any other project without the written authorization of the City of Austin and Harutunian Engineering, Inc. © 2003

HARUTUNIAN ENGINEERING INCORPORATED
ENGINEERING AND ENVIRONMENTAL CONSULTANTS
305 EAST HUNTLAND DRIVE SUITE 500 AUSTIN, TEXAS 78752

NO.	DATE	REVISION	APPROV.
4			
3			
2			
1	1/5/7	RECORD DRAWING	K.A.H.

THE SEAL APPEARING ON THIS DOCUMENT WAS AUTHORIZED BY K. A. HARUTUNIAN, P.E. 59181 ON OCTOBER 18, 2003

WARNING 0 1/2 1 IF THIS BAR DOES NOT MEASURE 1" THEN DRAWING IS NOT TO SCALE

STATE OF TEXAS K. A. HARUTUNIAN 59181 REGISTERED PROFESSIONAL ENGINEER

CITY OF AUSTIN, TEXAS
NORTHEAST INTERIM WASTEWATER TREATMENT PLANT

LIFT PUMP "LS-LSP-003"
CONTROL SCHEMATIC (SHEET 2 OF 2)

Turner Collie & Braden Inc.
ENGINEERS • PLANNERS • PROJECT MANAGERS

Unit PUBLIC WORKS	Scale NONE	Date OCTOBER 2003	
Designed HEI	Checked HEI	Job No. 052-122094-0008	
Drawn HEI	Approved HEI	Sheet 221/327	

Dwg. No. RE-7

GENERAL NOTES:

1. DISCONNECT AND REMOVE EXISTING MCC MOTOR STARTER BUCKET, ASSOCIATED INTERCONNECT WIRING, FIELD WIRING, FIELD DEVICES, ETC. IN THEIR ENTIRETY. REFER TO ONE-LINES, ELEVATIONS AND PLAN DRAWINGS FOR ADDITIONAL INFORMATION.
2. DISCONNECT AND REMOVE THE EXISTING MAIN CONTROL PANEL INSTRUMENTATION AND CONTROL EQUIPMENT (I.E. TERMINAL BLOCKS, INTERCONNECT WIRING, CONTROL DEVICES, ETC.) IN THEIR ENTIRETY.
3. COORDINATE THE REQUIREMENTS OF THE DEMOLITION/RENOVATION DRAWINGS WITH THE EXISTING MOTOR CONTROL CENTER MANUFACTURER PRIOR TO PERFORMING AND DEMOLITION ACTIVITIES.

THIS CONFORMED DOCUMENT IS RELEASED FOR THE CONVENIENCE OF THE CONTRACTOR UNDER THE AUTHORITY OF:

K. A. Harutunian — 11-01-22

K. A. HARUTUNIAN, P.E. — DATE
TX LIC NO. 59181

SEE DISCLAIMER FOR LIMITATIONS OF USE.

CONTRACT DOCUMENTS DATED FEBRUARY 28, 2022, AS PART OF THE BIDDING DOCUMENTS (DRAWINGS AND SPECIFICATIONS) AND SUBSEQUENTLY ISSUED ADDENDA HAVE BEEN MERGED INTO ONE CONFORMING SET OF DOCUMENTS FOR THE CONVENIENCE OF THE CONTRACTOR. IF INCONSISTENCIES OR AMBIGUITIES BETWEEN "CONFORMED" DOCUMENTS AND CONTRACT DOCUMENTS ARE FOUND, THE CONTRACT DOCUMENTS SHALL GOVERN.

This document, and the designs incorporated herein, is an instrument of professional service that has been developed, designed and prepared by Harutunian Engineering, Inc., and is not to be used, in whole or in part, for any other project without giving written notice to Harutunian Engineering, Inc.

REV	DATE	BY	DESCRIPTION
			CONFORMED DOCUMENTS

DESIGNED HEI
DRAWN HEI
CHECKED HEI
DATE NOVEMBER 2022

** ORIGINAL SEALED BY K.A. HARUTUNIAN 02-28-22 TX PE 59181 **

HARUTUNIAN ENGINEERING INCORPORATED
ENGINEERING AND ENVIRONMENTAL CONSULTANTS
8100 CROSS PARK DRIVE AUSTIN, TEXAS 78754
TBPE REGISTRATION NO. F-2408

carollo
TBPELS No. F-882

CITY OF AUSTIN — FOUNDED 1839

CITY OF AUSTIN

CITY OF AUSTIN
WILD HORSE RANCH WWTP EXPANSION
DEMOLITION
LIFT PUMP NO. 3
CONTROL WIRING SCHEMATICS - DEMOLITION - 2

VERIFY SCALES
BAR IS ONE INCH ON ORIGINAL DRAWING
0 1"
IF NOT ONE INCH ON THIS SHEET, ADJUST SCALES ACCORDINGLY

JOB NO. 10976A.00
DRAWING NO. 10DN06
SHEET NO. 127 OF 464

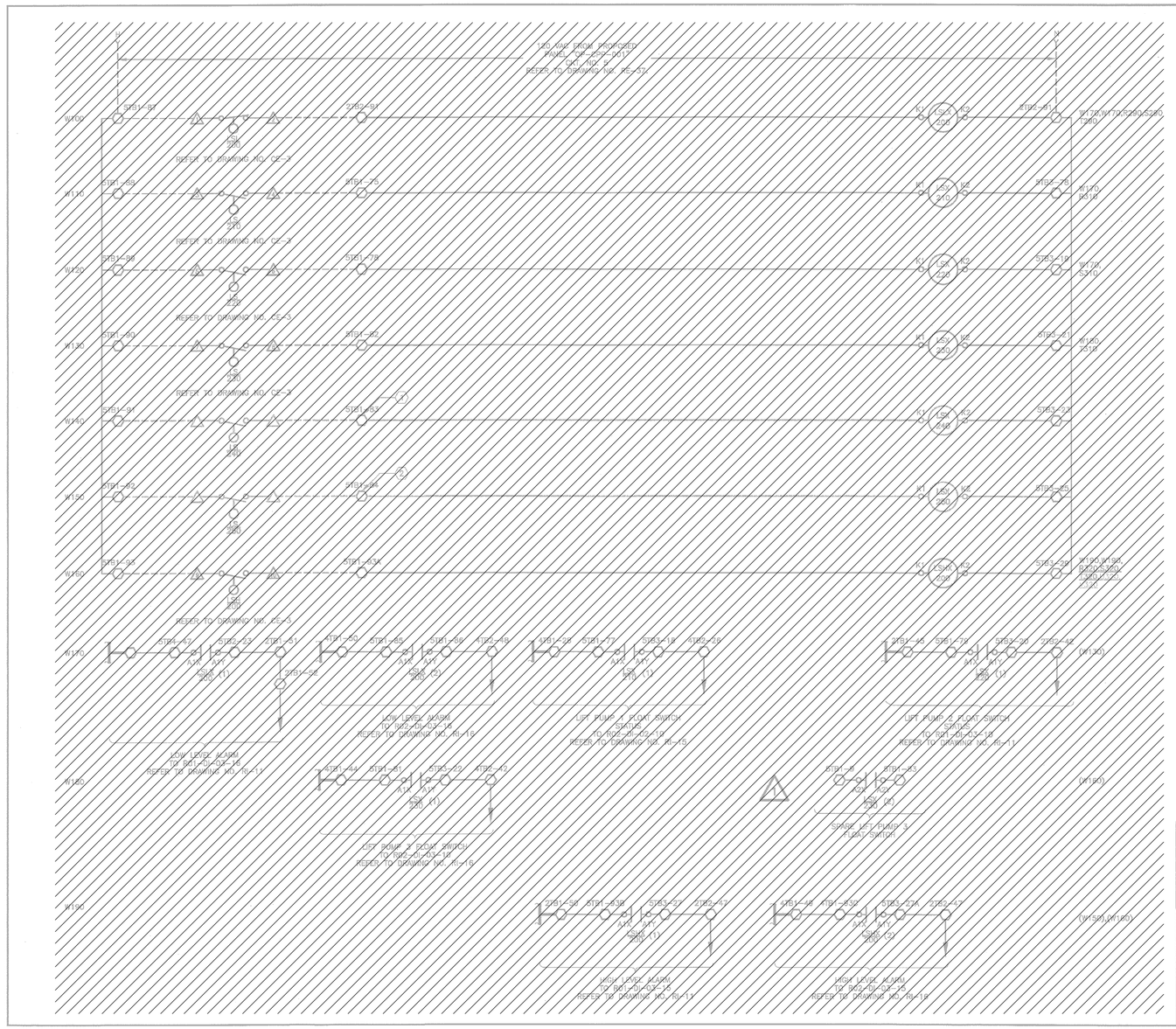
120 VAC FROM PROTECTED PANEL OP-PDP-001 CKT NO. X REFER TO DRAWING NO. RE-57
W100
W110
W120
W130
W140
W150
W160
W170
W180
W190
W200
W210
W220
W230
W240
W250
W260
W270
W280
W290
W300
W310
W320
W330
W340
W350
W360
W370
W380
W390
W400
W410
W420
W430
W440
W450
W460
W470
W480
W490

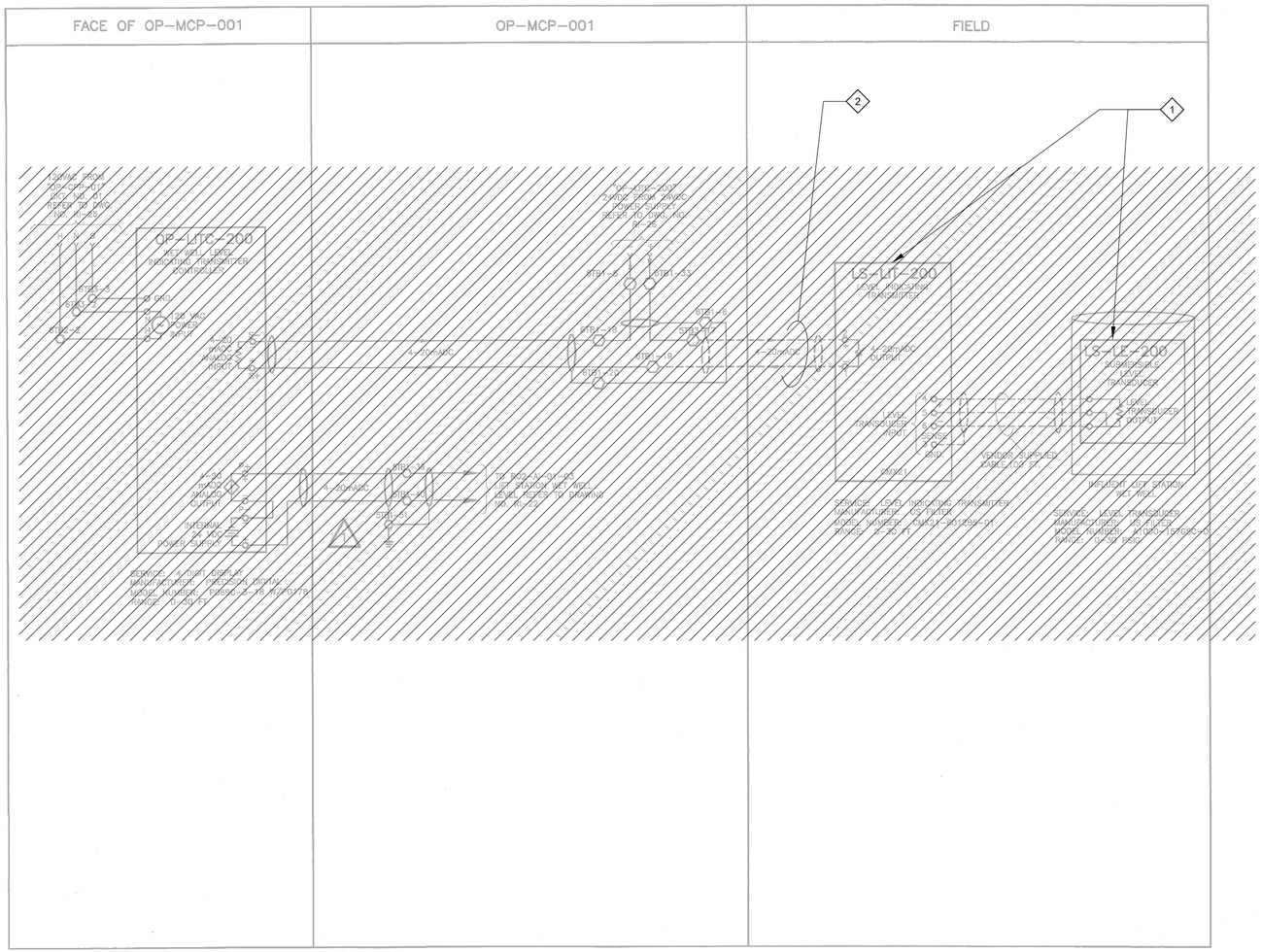

WIRING AND TERMINAL DEVICE LEGEND:

- ○ DEVICE WIRING TERMINAL
- ⬡ TERMINAL BLOCK LOCATED IN CONTROL PANEL "OP-MCP-001". ANY DEVICE SHOWN WITH DEVICE WIRING TERMINALS CONNECTED DIRECTLY TO THESE SYMBOLS WITH SOLID LINES IS ALSO LOCATED IN "OP-MCP-001".
- □ TERMINAL BLOCK LOCATED IN 480 VOLT MOTOR CONTROL CENTER "OP-MCC-01L" OR "OP-MCC-01R" AS APPLICABLE. ANY DEVICE SHOWN WITH DEVICE WIRING TERMINALS CONNECTED DIRECTLY TO THESE SYMBOLS WITH SOLID LINES IS ALSO LOCATED IN "OP-MCC-01L" OR "OP-MCC-01R" AS APPLICABLE.
- △ TERMINAL BLOCK LOCATED IN FIELD MOUNTED EQUIPMENT AS NOTED. ANY DEVICE SHOWN WITH DEVICE WIRING TERMINALS CONNECTED DIRECTLY TO THESE SYMBOLS WITH SOLID LINES IS LOCATED IN OR ON THE EQUIPMENT.
- — — FIELD WIRING

GENERAL NOTES:

1. CLOSELY COORDINATE INSTALLATION/LOCATION WITH MECHANICAL.
2. REFER TO PLANS FOR APPROXIMATE LOCATION/MOUNTING DETAILS/ETC., OF THE PROPOSED EQUIPMENT SHOWN HEREIN.

REFERENCE DRAWINGS:

RI-22 – PLC I/O WIRING SCHEMATICS

KEY NOTES

1. DISCONNECT AND REMOVE EXISTING LEVEL INDICATING TRANSMITTER/SENSOR AND ASSOCIATED EQUIPMENT IN ITS ENTIRETY.
2. DISCONNECT AND REMOVE EXISTING ASSOCIATED FIELD WIRING IN ITS ENTIRETY. REFER TO PLAN DRAWINGS FOR ADDITIONAL INFORMATION.

RECORD DRAWING

THIS CONSTRUCTION DOCUMENT WAS PREPARED USING INFORMATION SUPPLIED BY THE CONTRACTOR TO REPRESENT CONSTRUCTION CHANGES. THIS DOCUMENT IS FOR INFORMATION AND REFERENCE IN CONNECTION WITH THE OWNER'S USE AND OCCUPANCY OF THE PROJECT AND IS NOT INTENDED FOR BID, PERMIT OR CONSTRUCTION.

BY: K.A. Harutunian DATE: 1/5/2007

REUSE OF DOCUMENTS
This document and the ideas and designs incorporated herein as an instrument of professional service has been developed, designed and prepared by Harutunian Engineering, Inc. and is not to be used, in whole or part, for any other project without the written authorization of the City of Austin and Harutunian Engineering, Inc. © 2003

HARUTUNIAN ENGINEERING INCORPORATED
ENGINEERING AND ENVIRONMENTAL CONSULTANTS
305 EAST HIGHLAND DRIVE SUITE 900 AUSTIN, TEXAS 78752

NO.	DATE	REVISION	APPROVED
4			
3			
2			
1	1/5/7	RECORD DRAWING	K.A.H.

THE SEAL APPEARING ON THIS DOCUMENT WAS AUTHORIZED BY K. A. HARUTUNIAN, P.E. 59181 ON OCTOBER 18, 2003

WARNING
0 1/2 1
IF THIS BAR DOES NOT MEASURE 1" THEN DRAWING IS NOT TO SCALE

STATE OF TEXAS K. A. HARUTUNIAN 59181 REGISTERED PROFESSIONAL ENGINEER

CITY OF AUSTIN, TEXAS
NORTHEAST INTERIM WASTEWATER TREATMENT PLANT

LIFT STATION WET WELL LEVEL INSTRUMENT WIRING SCHEMATIC

Turner Collie & Braden Inc.
ENGINEERS • PLANNERS • PROJECT MANAGERS

Unit PUBLIC WORKS	Scale NONE	Date OCTOBER 2003	
Designed HEI	Checked HEI	Job No. 052-122084-0008	
Drawn HEI	Approved HEI	Sheet 254/327	

Dwg. No. RI-2

THIS CONFORMED DOCUMENT IS RELEASED FOR THE CONVENIENCE OF THE CONTRACTOR UNDER THE AUTHORITY OF:

K. A. Harutunian 11-01-22

K. A. HARUTUNIAN, P.E. DATE
TX LIC NO. 59181

SEE DISCLAIMER FOR LIMITATIONS OF USE.

CONTRACT DOCUMENTS DATED FEBRUARY 28, 2022, AS PART OF THE BIDDING DOCUMENTS (DRAWINGS AND SPECIFICATIONS) AND SUBSEQUENTLY ISSUED ADDENDA HAVE BEEN MERGED INTO ONE CONFORMING SET OF DOCUMENTS FOR THE CONVENIENCE OF THE CONTRACTOR. IF INCONSISTENCIES OR AMBIGUITIES BETWEEN "CONFORMED" DOCUMENTS AND CONTRACT DOCUMENTS ARE FOUND, THE CONTRACT DOCUMENTS SHALL GOVERN.

This document, and the designs incorporated herein, is an instrument of professional service that has been developed, designed and prepared by Harutunian Engineering, Inc., and is not to be used, in whole or in part, for any other project without giving written notice to Harutunian Engineering, Inc.

REV	DATE	BY	DESCRIPTION
			CONFORMED DOCUMENTS

DESIGNED HEI
DRAWN HEI
CHECKED HEI
DATE NOVEMBER 2022

** ORIGINAL SEALED BY K.A. HARUTUNIAN 02-28-22 TX PE 59181 **

HARUTUNIAN ENGINEERING INCORPORATED
ENGINEERING AND ENVIRONMENTAL CONSULTANTS
8100 CROSS PARK DRIVE AUSTIN, TEXAS 78754
TBPE REGISTRATION NO. F-2408

carollo® TBPELS No. F-882

CITY OF AUSTIN FOUNDED 1839 **CITY OF AUSTIN**

CITY OF AUSTIN
WILD HORSE RANCH WWTP EXPANSION
DEMOLITION
LIFT STATION
INSTRUMENT WIRING SCHEMATICS - DEMOLITION

VERIFY SCALES
BAR IS ONE INCH ON ORIGINAL DRAWING
0 1"
IF NOT ONE INCH ON THIS SHEET, ADJUST SCALES ACCORDINGLY

JOB NO. 10976A.00
DRAWING NO. 10DN08
SHEET NO. 129 OF 464

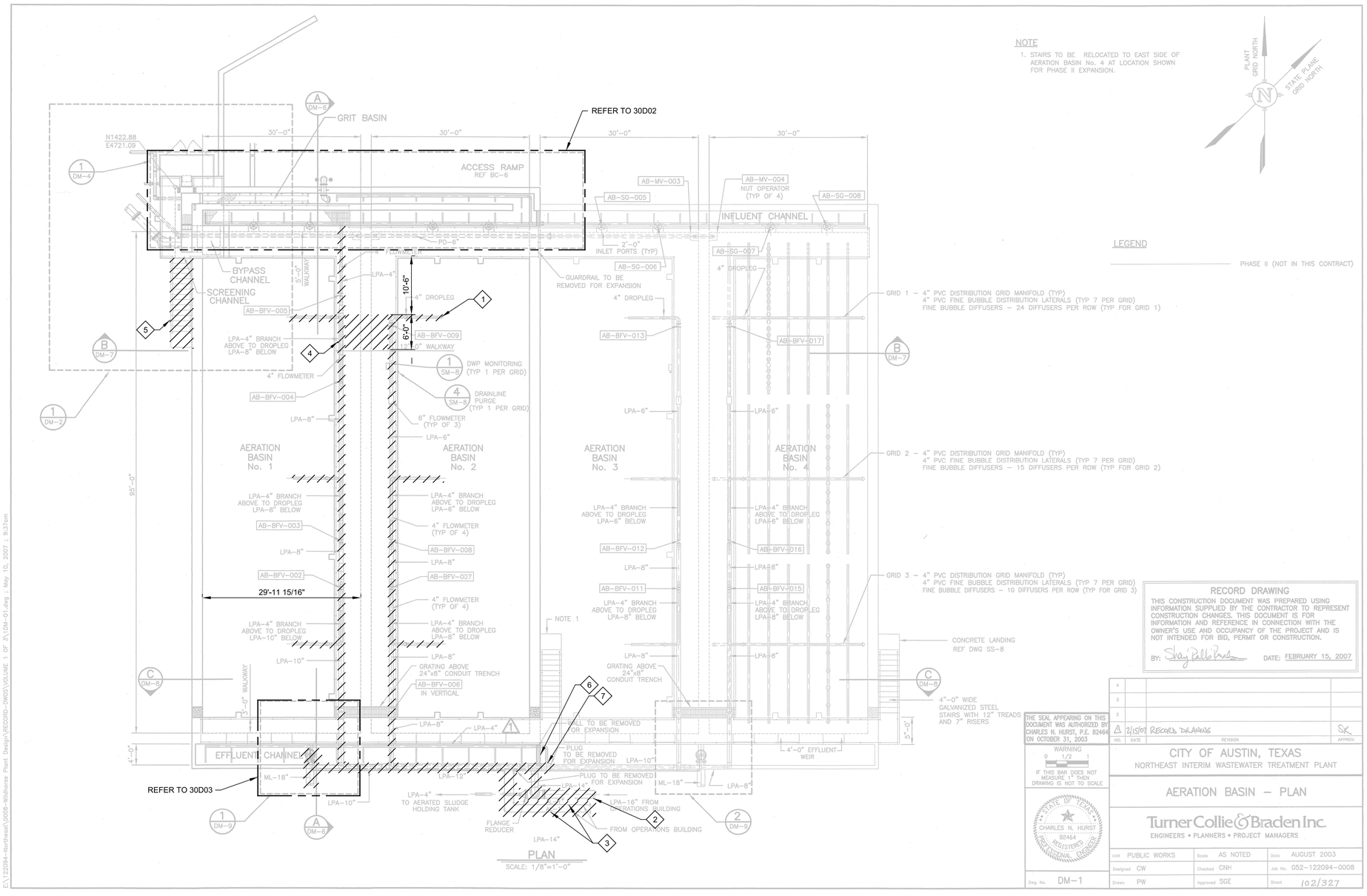

GENERAL NOTES:

1. CONTRACTOR SHALL FIELD VERIFY EXISTING CONDITIONS PRIOR TO STARTING WORK.
2. REFER TO SPECIFICATION 01140 - WORK RESTRICTIONS FOR SHUTDOWN REQUIREMENTS.

KEY NOTES:

1 REMOVE DIFFUSERS, MANIFOLDS, AND ALL ASSOCIATED AERATION EQUIPMENT.

2 REMOVE PROCESS AIR PIPING, REFER TO CIVIL DEMO SHEETS FOR DEMOLITION REQUIREMENTS IN THE YARD.

3 REMOVE ALUM PIPING. REFER TO CIVIL DEMO SHEETS FOR DEMOLITION REQUIREMENTS IN THE YARD.

4 DEMOLISH WALKWAY FOR INSTALLATION OF NEW WALKWAY. REFER TO STRUCTURAL SHEETS FOR REQUIREMENTS.

5 ACCESS STAIRS AND LANDING TO BE DEMOLISHED AND REPLACED. REFER TO STRUCTURAL SHEETS FOR REQUIREMENTS.

6 CORE WALL FOR INSTALLATION OF NEW 24" ML PIPE. REFER TO MECHANICAL SHEETS FOR REQUIREMENTS.

7 PRESERVE COARSE BUBBLE DIFFUSER SYSTEM FOR CONNECTION TO NEW AIR PIPING.

RECORD DRAWING

THIS CONSTRUCTION DOCUMENT WAS PREPARED USING INFORMATION SUPPLIED BY THE CONTRACTOR TO REPRESENT CONSTRUCTION CHANGES. THIS DOCUMENT IS FOR INFORMATION AND REFERENCE IN CONNECTION WITH THE OWNER'S USE AND OCCUPANCY OF THE PROJECT AND IS NOT INTENDED FOR BID, PERMIT OR CONSTRUCTION.

BY: DATE: FEBRUARY 15, 2007

THE SEAL APPEARING ON THIS DOCUMENT WAS AUTHORIZED BY CHARLES N. HURST, P.E. 82464 ON OCTOBER 31, 2003

NO.	DATE	REVISION	APPROV.
4			
3			
2			
1	2/15/07	RECORD DRAWINGS	SK

WARNING
0 1/2 1
IF THIS BAR DOES NOT MEASURE 1" THEN DRAWING IS NOT TO SCALE

STATE OF TEXAS
CHARLES N. HURST
82464
REGISTERED
PROFESSIONAL ENGINEER

CITY OF AUSTIN, TEXAS
NORTHEAST INTERIM WASTEWATER TREATMENT PLANT

AERATION BASIN – PLAN

Turner Collie & Braden Inc.
ENGINEERS • PLANNERS • PROJECT MANAGERS

Unit PUBLIC WORKS	Scale AS NOTED	Date AUGUST 2003	
Designed CW	Checked CNH	Job No. 052-122094-0008	
Drawn PW	Approved SGE	Sheet 102/327	
Dwg. No. DM-1			

THIS CONFORMED DOCUMENT IS RELEASED FOR THE CONVENIENCE OF THE CONTRACTOR UNDER THE AUTHORITY OF:

DANNY M HURTADO, P.E. 11-01-22
TX LIC NO. 104266 DATE

SEE DISCLAIMER FOR LIMITATIONS OF USE.

CONTRACT DOCUMENTS DATED JUNE 10, 2022, AS PART OF THE BIDDING DOCUMENTS (DRAWINGS AND SPECIFICATIONS) AND SUBSEQUENTLY ISSUED ADDENDA HAVE BEEN MERGED INTO ONE CONFORMING SET OF DOCUMENTS FOR THE CONVENIENCE OF THE CONTRACTOR. IF INCONSISTENCIES OR AMBIGUITIES BETWEEN "CONFORMED" DOCUMENTS AND CONTRACT DOCUMENTS ARE FOUND, THE CONTRACT DOCUMENTS SHALL GOVERN.

CONFORMED DOCUMENTS

REV	DATE	BY	DESCRIPTION

DESIGNED JPH
DRAWN SDW
CHECKED DMH
DATE NOVEMBER 2022

** ORIGINAL SEALED BY DANNY M. HURTADO 06-10-22 TX PE 104266 **

carollo®
TBPELS No. F-882

CITY OF AUSTIN
FOUNDED 1839

CITY OF AUSTIN

CITY OF AUSTIN
WILD HORSE RANCH WWTP EXPANSION
DEMOLITION
EXISTING AERATION BASINS 1 & 2

VERIFY SCALES
BAR IS ONE INCH ON ORIGINAL DRAWING
0 1"
IF NOT ONE INCH ON THIS SHEET, ADJUST SCALES ACCORDINGLY

JOB NO. 10976A.00
DRAWING NO. 30D01
SHEET NO. 130 OF 464

Plot Date: 10-OCT-2022 10:29:33 AM
User: LDietzel
PlotScale: 1:1
DesignScript: Carollo_Std_Pen_v0905.pen
ColorTable: gshade.ctb
Model: Layout1
LAST SAVED BY: ldietzel
PROJECT NO. 10976A10
FILE NAME: 10976A1030D01.dgn
E:\122094-Northeast\0008-Wildhorse Plant Design\RECORD-IWRS\VOLUME 1 OF 3\1DM-01.dwg : May 10, 2007 - 9:37am

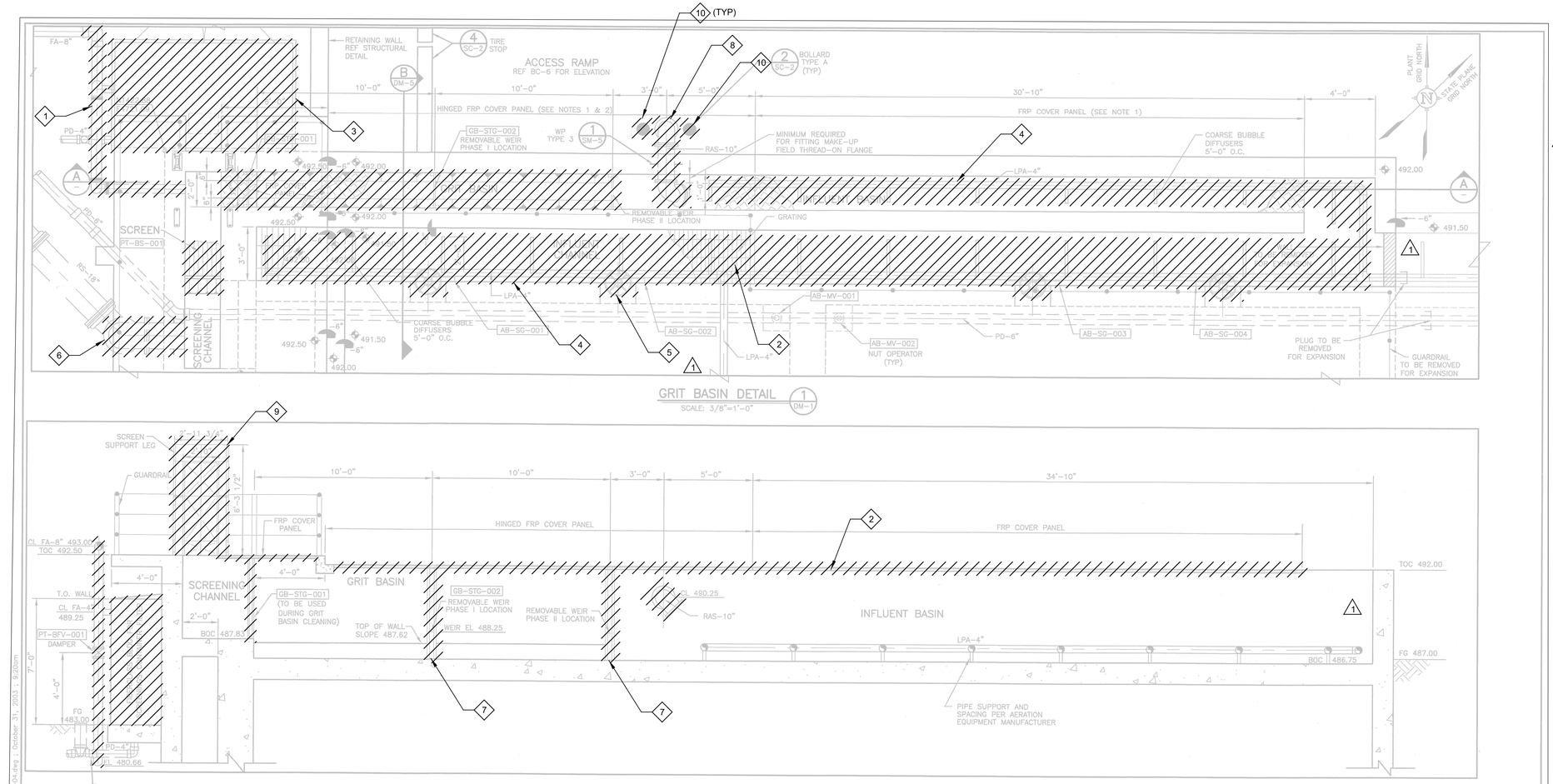

NOTES:

1. FRP COVER PANELS NOT TO EXCEED 4' x 8' OR 80 LBS. SIZE AND SPACING OF COVER PANEL SUPPORTS PER FRP MANUFACTURER. PROVIDE TWO LIFTING HANDLES PER PANEL. HANDLES TO REST FLUSH WITH PANEL WHEN NOT IN USE. FIBERGRATE COVERED GRATING OR EQUAL.
2. HINGED FRP COVER PANELS TO BE HINGED ON SOUTH WALL OF GRIT BASIN. PANELS TO BE CAPABLE OF OPENING TO A 90° ANGLE FROM THE CLOSED POSITION. PROVIDE MECHANISM FOR LOCKING INDIVIDUAL PANELS IN THE OPEN POSITION.
3. COAT THE GRIT BASIN AND INFLUENT BASIN WALLS WITH POLYBRID PER TABLE 1 OF SECTION 09902 STARTING AT THE ENTRANCE FROM THE SCREENING CHANNEL. COAT CHANNEL UP TO THE 90-DEG TURN AT THE EAST END OF THE INFLUENT BASIN. WALLS TO BE COATED DOWN TO CHANNEL FLOOR AND UP TO THE EDGE OF THE TOP HORIZONTAL SURFACE. COAT INSIDE ALL PENETRATIONS. POLYBRID TO BE TERMINATED WITH A 1/4" WIDE DEEP SAWCUT GROOVE AT THE EDGES.

GENERAL NOTES:

1. CONTRACTOR SHALL FIELD VERIFY EXISTING CONDITIONS PRIOR TO STARTING WORK.
2. REFER TO SPECIFICATION 01140 - WORK RESTRICTIONS FOR SHUTDOWN REQUIREMENTS.

KEY NOTES:

1 REFER TO YARD PIPING DEMO SHEETS FOR EXTENT OF FOUL AIR PIPING DEMOLITION.

2 REMOVE ALL GRATING AND FRP PANELS COVERING SCREEING CHANNEL, GRIT BASIN, INFLUENT BASIN, AND INFLUENT CHANNEL.

1 3 DEMOLISH FRP STRUCTURE.

4 PRESERVE COARSE BUBBLE DIFFUSERS AND ASSOCIATED AIR PIPING.

5 DEMOLISH SLIDE GATES (TYPICAL FOR 4 SLIDE GATES).

6 DEMOLISH 18" RS PIPE DOWN TO BELOW GRADE ELBOW. ABANDON IN PLACE REMAINING PIPE BY FILLING WITH NON-SHRINK GROUT. CUT PIPE FLUSH WITH WALL AND FILL WALL PENETRATION WITH CONCRETE PER STRUCTURAL SHEETS.

7 DEMOLISH REMOVABLE WEIR AND FRAME.

8 REMOVE RAS PIPE ON BOTH SIDES OF WALL AND CUT PIPE THIMBLE FLUSH WITH WALL. FILL WALL PENETRATION WITH CONCRETE PER STRUCTURAL SHEETS. REMOVE PIPE IN YARD DOWN TO BELOW GRADE ELBOW. REFER TO CIVIL DEMO SHEETS FOR DEMOLITION REQUIREMENTS IN THE YARD.

9 DEMOLISH SCREEN AND ASSOCIATED EQUIPMENT.

10 DEMOLISH BOLLARDS PROTECTING 10" RAS PIPE.

RECORD DRAWING
THIS CONSTRUCTION DOCUMENT WAS PREPARED USING INFORMATION SUPPLIED BY THE CONTRACTOR TO REPRESENT CONSTRUCTION CHANGES. THIS DOCUMENT IS FOR INFORMATION AND REFERENCE IN CONNECTION WITH THE OWNER'S USE AND OCCUPANCY OF THE PROJECT AND IS NOT INTENDED FOR BID, PERMIT OR CONSTRUCTION.
BY: Shay Pabst Cashon DATE: 2/15/2007

NO.	DATE	REVISION	APPROV.
4			
3			
2			
1			

WARNING
0 1/2 1
IF THIS BAR DOES NOT MEASURE 1" THEN DRAWING IS NOT TO SCALE

STATE OF TEXAS
CHARLES N. HURST
82464
REGISTERED
ENGINEER
10/31/03

Dwg. No. DM-4

CITY OF AUSTIN, TEXAS
NORTHEAST INTERIM WASTEWATER TREATMENT PLANT

GRIT BASIN PLAN & SECTION

Turner Collie & Braden Inc.
ENGINEERS • PLANNERS • PROJECT MANAGERS

Unit PUBLIC WORKS	Scale AS NOTED	Date AUGUST 2003	
Designed CW	Checked CNH	Job No. 052-122094-0008	
Drawn PW	Approved SGE	Sheet 105/327	

THIS CONFORMED DOCUMENT IS RELEASED FOR THE CONVENIENCE OF THE CONTRACTOR UNDER THE AUTHORITY OF:

11-01-22
DANNY M HURTADO, P.E. DATE
TX LIC NO. 104266

SEE DISCLAIMER FOR LIMITATIONS OF USE.

CONTRACT DOCUMENTS DATED JUNE 10, 2022, AS PART OF THE BIDDING DOCUMENTS (DRAWINGS AND SPECIFICATIONS) AND SUBSEQUENTLY ISSUED ADDENDA HAVE BEEN MERGED INTO ONE CONFORMING SET OF DOCUMENTS FOR THE CONVENIENCE OF THE CONTRACTOR. IF INCONSISTENCIES OR AMBIGUITIES BETWEEN "CONFORMED" DOCUMENTS AND CONTRACT DOCUMENTS ARE FOUND, THE CONTRACT DOCUMENTS SHALL GOVERN.

CONFORMED DOCUMENTS

REV	DATE	BY	DESCRIPTION
1	09-06-22	DMH	ADDENDUM NO. 4

DESIGNED JPH
DRAWN SDW
CHECKED DMH
DATE NOVEMBER 2022

** ORIGINAL SEALED BY DANNY M. HURTADO 06-10-22 TX PE 104266 **

carollo® TBPELS No. F-882

CITY OF AUSTIN FOUNDED 1839

CITY OF AUSTIN

CITY OF AUSTIN
WILD HORSE RANCH WWTP EXPANSION
DEMOLITION
EXISTING AERATION BASINS 1 & 2
DETAILS 1

VERIFY SCALES
BAR IS ONE INCH ON ORIGINAL DRAWING
0 1"
IF NOT ONE INCH ON THIS SHEET, ADJUST SCALES ACCORDINGLY

JOB NO. 10976A.00
DRAWING NO. 30D02
SHEET NO. 131 OF 464

PROJECT NO. 10976A10 FILE NAME: 10976A1030D02.dgn

Plot Date: 10-OCT-2022 10:31:45 AM
User: LDietzel
PlotScale: 1:1
DesignScript: Carollo_Std_Pen_v0905.pen
ColorTable: gshade.ctb
Model: Layout1
LAST SAVED BY: ldietzel
E:\122094-Northeast\0005-Wildhorse Plant Design\CAD\DWGS\10d-03.dwg - October 31, 2003 - 9:20am

Plot Date: 10-OCT-2022 10:33:45 AM
User: LDietzel
Model: Layout1 ColorTable: gshade.ctb DesignScript: Carollo_Std_Pen_v0905.pen PlotScale: 1:1
LAST SAVED BY: ldietzel

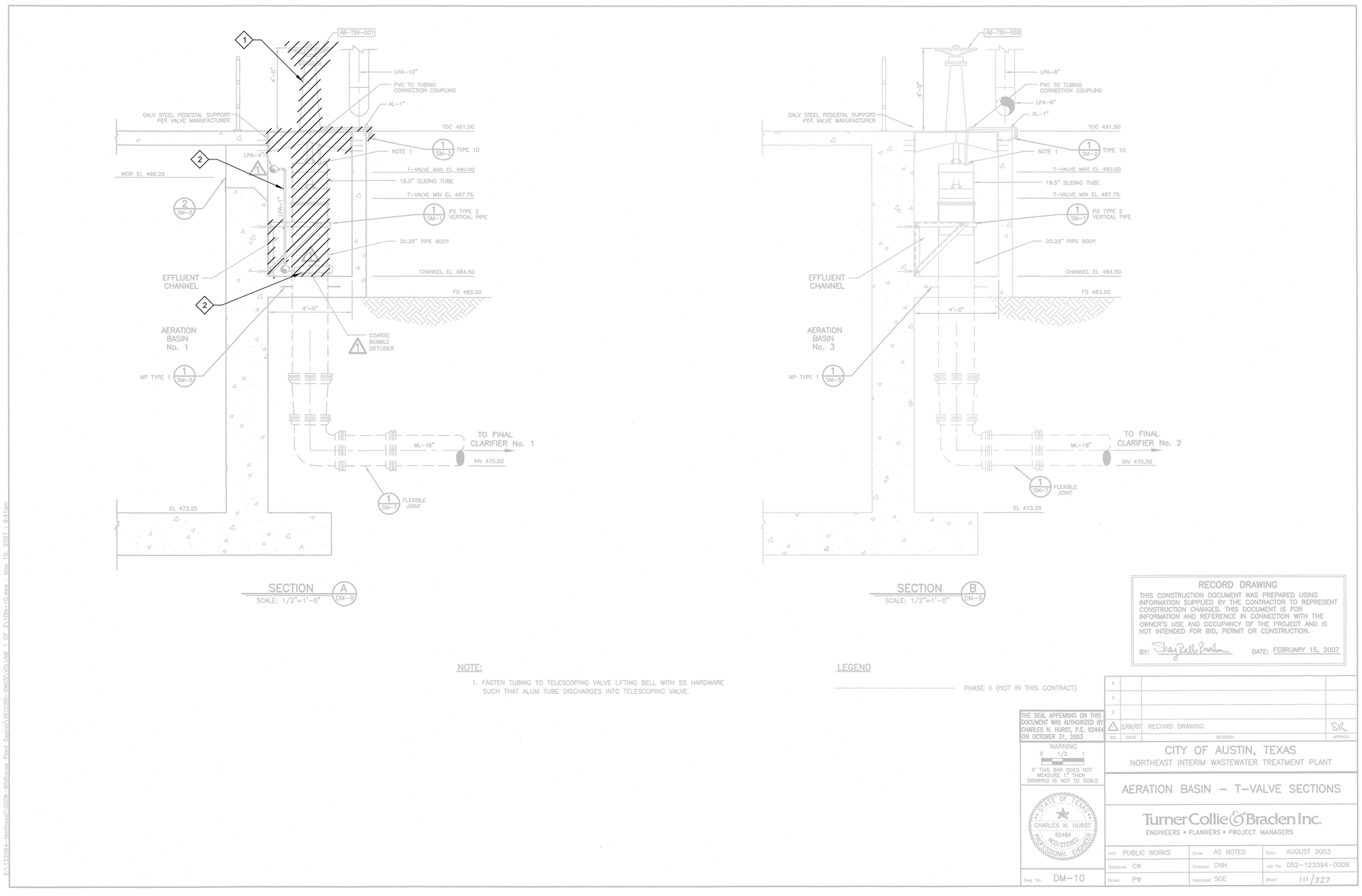

GENERAL NOTES:

1. CONTRACTOR SHALL FIELD VERIFY EXISTING CONDITIONS PRIOR TO STARTING WORK.
2. REFER TO SPECIFICATION 01140 - WORK RESTRICTIONS FOR SHUTDOWN REQUIREMENTS.

KEY NOTES:

1 REMOVE TELESCOPING VALVE AND EQUIPMENT. 18" ML PIPING TO BE REMOVED FLUSH WITH CHANNEL BOTTOM. OPENING SHALL BE FILLED WITH CONCRETE PER STRUCTURAL DRAWINGS. REFER TO YARD PIPING DEMOLITION SHEETS FOR EXTENT OF 18" ML DEMOLITION.

2 COARSE BUBBLE DIFFUSERS AND ASSOCIATED EQUIPMENT SHALL BE PRESERVED.

NOTE:

1. FASTEN TUBING TO TELESCOPING VALVE LIFTING BELL WITH SS HARDWARE SUCH THAT ALUM TUBE DISCHARGES INTO TELESCOPING VALVE.

LEGEND

PHASE II (NOT IN THIS CONTRACT)

RECORD DRAWING
THIS CONSTRUCTION DOCUMENT WAS PREPARED USING INFORMATION SUPPLIED BY THE CONTRACTOR TO REPRESENT CONSTRUCTION CHANGES. THIS DOCUMENT IS FOR INFORMATION AND REFERENCE IN CONNECTION WITH THE OWNER'S USE AND OCCUPANCY OF THE PROJECT AND IS NOT INTENDED FOR BID, PERMIT OR CONSTRUCTION.
BY: [signature] DATE: FEBRUARY 15, 2007

THE SEAL APPEARING ON THIS DOCUMENT WAS AUTHORIZED BY CHARLES N. HURST, P.E. 82464 ON OCTOBER 31, 2003

WARNING 0 1/2 1 IF THIS BAR DOES NOT MEASURE 1" THEN DRAWING IS NOT TO SCALE

STATE OF TEXAS CHARLES N. HURST 82464 REGISTERED PROFESSIONAL ENGINEER

NO.	DATE	REVISION	APPROV.
4			
3			
2			
1	2/09/07	RECORD DRAWING	SK

CITY OF AUSTIN, TEXAS
NORTHEAST INTERIM WASTEWATER TREATMENT PLANT

AERATION BASIN – T–VALVE SECTIONS

Turner Collie & Braden Inc.
ENGINEERS • PLANNERS • PROJECT MANAGERS

Unit PUBLIC WORKS	Scale AS NOTED	Date AUGUST 2003	
Designed CW	Checked CNH	Job No. 052–122094–0008	
Drawn PW	Approved SGE	Sheet 111/327	

Dwg. No. DM–10

THIS CONFORMED DOCUMENT IS RELEASED FOR THE CONVENIENCE OF THE CONTRACTOR UNDER THE AUTHORITY OF:

11-01-22
DANNY M HURTADO, P.E. DATE
TX LIC NO. 104266

SEE DISCLAIMER FOR LIMITATIONS OF USE.

CONTRACT DOCUMENTS DATED JUNE 10, 2022, AS PART OF THE BIDDING DOCUMENTS (DRAWINGS AND SPECIFICATIONS) AND SUBSEQUENTLY ISSUED ADDENDA HAVE BEEN MERGED INTO ONE CONFORMING SET OF DOCUMENTS FOR THE CONVENIENCE OF THE CONTRACTOR. IF INCONSISTENCIES OR AMBIGUITIES BETWEEN "CONFORMED" DOCUMENTS AND CONTRACT DOCUMENTS ARE FOUND, THE CONTRACT DOCUMENTS SHALL GOVERN.

REV	DATE	BY	DESCRIPTION
			CONFORMED DOCUMENTS

DESIGNED JPH
DRAWN SDW
CHECKED DMH
DATE NOVEMBER 2022

** ORIGINAL SEALED BY DANNY M. HURTADO 06-10-22 TX PE 104266 **

carollo TBPELS No. F-882

CITY OF AUSTIN FOUNDED 1839

CITY OF AUSTIN

CITY OF AUSTIN
WILD HORSE RANCH WWTP EXPANSION
DEMOLITION
EXISTING AERATION BASINS 1 & 2
DETAILS 2

VERIFY SCALES
BAR IS ONE INCH ON ORIGINAL DRAWING
0 1"
IF NOT ONE INCH ON THIS SHEET, ADJUST SCALES ACCORDINGLY

JOB NO. 10976A.00
DRAWING NO. 30D03
SHEET NO. 132 OF 464

PROJECT NO. 10976A10 FILE NAME: 10976A1030D03.dgn
F:\122094–Northeast\0008–Wildhorse Pond Deletion\RECORD–DWGS\VOLUME 1 OF 3\10M–10.dgn – May 10, 2007 – 8:41am

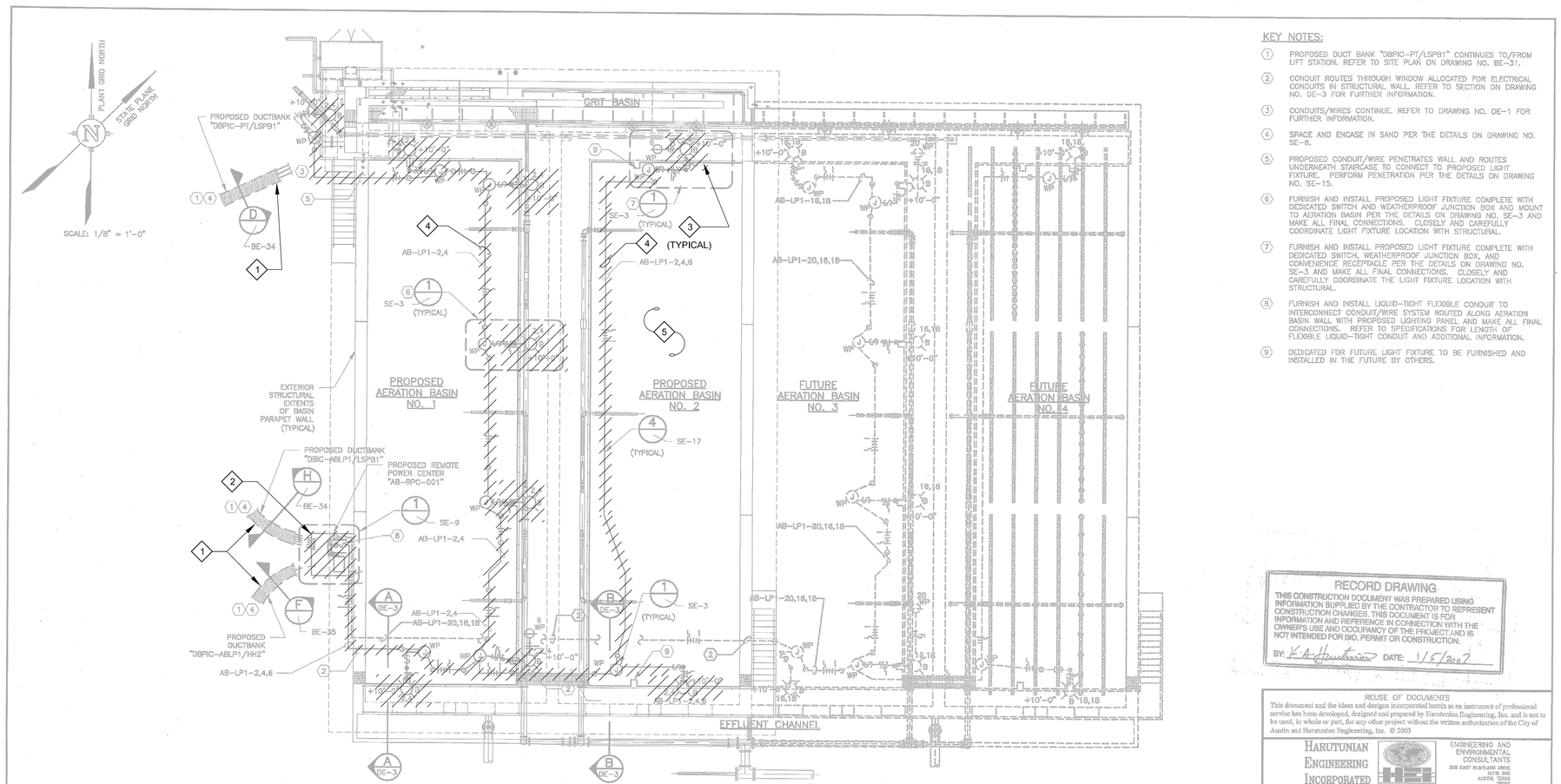

KEY NOTES:

1. PROPOSED DUCT BANK "DBPIC-PT/LSPB1" CONTINUES TO/FROM LIFT STATION. REFER TO SITE PLAN ON DRAWING NO. BE-31.
2. CONDUIT ROUTES THROUGH WINDOW ALLOCATED FOR ELECTRICAL CONDUITS IN STRUCTURAL WALL. REFER TO SECTION ON DRAWING NO. DE-3 FOR FURTHER INFORMATION.
3. CONDUITS/WIRES CONTINUE. REFER TO DRAWING NO. DE-1 FOR FURTHER INFORMATION.
4. SPACE AND ENCASE IN SAND PER THE DETAILS ON DRAWING NO. SE-8.
5. PROPOSED CONDUIT/WIRE PENETRATES WALL AND ROUTES UNDERNEATH STAIRCASE TO CONNECT TO PROPOSED LIGHT FIXTURE. PERFORM PENETRATION PER THE DETAILS ON DRAWING NO. SE-15.
6. FURNISH AND INSTALL PROPOSED LIGHT FIXTURE COMPLETE WITH DEDICATED SWITCH AND WEATHERPROOF JUNCTION BOX AND MOUNT TO AERATION BASIN PER THE DETAILS ON DRAWING NO. SE-3 AND MAKE ALL FINAL CONNECTIONS. CLOSELY AND CAREFULLY COORDINATE LIGHT FIXTURE LOCATION WITH STRUCTURAL.
7. FURNISH AND INSTALL PROPOSED LIGHT FIXTURE COMPLETE WITH DEDICATED SWITCH, WEATHERPROOF JUNCTION BOX, AND CONVENIENCE RECEPTACLE PER THE DETAILS ON DRAWING NO. SE-3 AND MAKE ALL FINAL CONNECTIONS. CLOSELY AND CAREFULLY COORDINATE THE LIGHT FIXTURE LOCATION WITH STRUCTURAL.
8. FURNISH AND INSTALL LIQUID-TIGHT FLEXIBLE CONDUIT TO INTERCONNECT CONDUIT/WIRE SYSTEM ROUTED ALONG AERATION BASIN WALL WITH PROPOSED LIGHTING PANEL AND MAKE ALL FINAL CONNECTIONS. REFER TO SPECIFICATIONS FOR LENGTH OF FLEXIBLE LIQUID-TIGHT CONDUIT AND ADDITIONAL INFORMATION.
9. DEDICATED FOR FUTURE LIGHT FIXTURE TO BE FURNISHED AND INSTALLED IN THE FUTURE BY OTHERS.

GENERAL NOTES:

1. LOCATIONS/SIZES OF ELECTRICAL EQUIPMENT SHOWN ARE APPROXIMATE. CONTRACTOR SHALL FIELD VERIFY ACTUAL CONDITIONS PRIOR TO COMMENCING CONSTRUCTION.
2. SUPPORT/RACK EXPOSED CONDUIT SYSTEMS PER DETAILS ON DRAWING NO. SE-7.
3. NOT ALL EQUIPMENT IS SHOWN, FOR CLARITY.
4. EXACT LOCATIONS OF MECHANICAL/STRUCTURAL/CIVIL COMPONENTS ARE NOT SHOWN ON THIS DRAWING. REFER TO MECHANICAL/STRUCTURAL/CIVIL DRAWINGS FOR EXACT LOCATIONS OF MECHANICAL/STRUCTURAL/CIVIL ITEMS.
5. CONTRACTOR SHALL SIZE ALL PULLBOXES PER, AND IN ACCORDANCE WITH, THE REQUIREMENTS OF THE NATIONAL ELECTRICAL CODE (N.E.C.).

GENERAL NOTES (CONTINUED):

6. EXTREME CARE MUST BE TAKEN FOR THE INSTALLATION OF THE ELECTRICAL DUCT BANKS SINCE THERE ARE NO AVAILABLE AS BUILT RECORDS OF PROFILES IDENTIFYING THE LOCATION AND INVERT ELEVATIONS OF EXISTING UNDERGROUND ELECTRICAL SYSTEM AND UNDERGROUND MECHANICAL PIPING. ROUTING OF NEW DUCT BANK SHOWN IS BASED ON SCHEMATIC KNOWLEDGE OF THE SIZE OF MECHANICAL PIPING AND THEIR APPROXIMATE SIZE AND/OR LOCATION. NO DATA IS AVAILABLE PERTAINING TO EXISTING UNDERGROUND ELECTRICAL DUCT BANK SYSTEM AND ITS COORDINATION WITH THE UNDERGROUND MECHANICAL SYSTEM. THEREFORE THE CONTRACTOR IS TO EXERCISE EXTREME CARE, VERIFY LOCATION/ROUTING/ELEVATION OF EXISTING UNDERGROUND UTILITIES PRIOR TO COMMENCING FULL SCALE INSTALLATION PROCESS OF THE PROPOSED DUCT BANK SYSTEM. FOLLOWING THE DISCOVERY VERIFICATION OF EXISTING UNDERGROUND UTILITIES, SHOULD ADJUSTMENT/MODIFICATIONS BECOME A NECESSITY TO EITHER THE EXISTING OR PROPOSED SYSTEM (AS APPLICABLE), THE EXISTING DISCOVERED FIELD CONDITIONS MUST BE BROUGHT TO THE ENGINEERS ATTENTION FOR EXECUTION OF THE NECESSARY ADJUSTMENTS/MODIFICATIONS.

GENERAL NOTES (CONTINUED):

7. CONTRACTOR SHALL CLOSELY AND CAREFULLY COORDINATE ROUTE OF PROPOSED CONDUIT/WIRE WITH EXISTING AND PROPOSED CIVIL/MECHANICAL/STRUCTURAL/ELECTRICAL SYSTEMS/COMPONENTS/EQUIPMENT/UTILITIES, ETC.
8. PROPOSED CONDUITS/WIRES ARE SHOWN SCHEMATICALY FOR CLARITY.
9. DARK LINEWORK DENOTES PROPOSED EQUIPMENT. LIGHT LINEWORK DENOTES FUTURE EQUIPMENT.

RECORD DRAWING
THIS CONSTRUCTION DOCUMENT WAS PREPARED USING INFORMATION SUPPLIED BY THE CONTRACTOR TO REPRESENT CONSTRUCTION CHANGES. THIS DOCUMENT IS FOR INFORMATION AND REFERENCE IN CONNECTION WITH THE OWNER'S USE AND OCCUPANCY OF THE PROJECT AND IS NOT INTENDED FOR BID, PERMIT OR CONSTRUCTION.
BY: K.A. Harutunian DATE: 1/5/2007

REUSE OF DOCUMENTS
This document and the ideas and designs incorporated herein as an instrument of professional service has been developed, designed and prepared by Harutunian Engineering, Inc. and is not to be used, in whole or part, for any other project without the written authorization of the City of Austin and Harutunian Engineering, Inc. © 2003

HARUTUNIAN ENGINEERING INCORPORATED
ENGINEERING AND ENVIRONMENTAL CONSULTANTS
305 EAST HIGHLAND DRIVE
SUITE 500
AUSTIN, TEXAS
78752

NO.	DATE	REVISION	APPROV.
4			
3			
2			
1			

WARNING
0 1/2 1
IF THIS BAR DOES NOT MEASURE 1" THEN DRAWING IS NOT TO SCALE

K. A. HARUTUNIAN 59101 REGISTERED PROFESSIONAL ENGINEER
10/18/2005

CITY OF AUSTIN, TEXAS
NORTHEAST INTERIM WASTEWATER TREATMENT PLANT
AERATION BASIN
LIGHTING AND AUXILIARY SYSTEMS PLAN
Turner Collie & Braden Inc.
ENGINEERS • PLANNERS • PROJECT MANAGERS

Unit PUBLIC WORKS	Scale 1/8" = 1'-0"	Date OCTOBER 2003	
Designed HEI	Checked HEI	Job No. 052-122094-0008	
Drawn HEI	Approved HEI	Sheet 113/327	
Dwg. No. DE-2			

KEY NOTES

1. REFER TO DUCT BANK SECTION DEMOLITION SHEETS [05DE05] THROUGH [05DE08] FOR DEMOLITION DETAILS OF THE DUCT BANK CONTENTS.
2. DEMOLISH TRANSFORMER, LIGHTING PANEL, AND EQUIPMENT PAD IN ITS ENTIRETY. CUT CONDUITS A MINIMUM OF 6" BELOW GRADE AND SEAL WITH 50 YEAR NON SHRINK GROUT.
3. DISCONNECT AND REMOVE LIGHT FIXTURE. POLE TO REMAIN AND BE REUSED DURING RENOVATION.
4. DISCONNECT AND REMOVE CABLE/WIRE AND ASSOCIATED CONDUIT AND SUPPORTS IN THEIR ENTIRETY.
5. PRELIMINARY FIELD INVESTIGATIONS REVEALED THAT FOUR ANALYSIS INDICATING TRANSMITTERS (AIT) HAD BEEN INSTALLED AND DO NOT APPEAR ON THE RECORD DRAWINGS. CONTRACTOR SHALL DISCONNECT AND REMOVE THE AITS AND ALL ASSOCIATED CONDUIT/WIRE AND RACKING IN ITS ENTIRETY. IT APPEARS THAT THE POWER SERVING THE AITS IS TAPPED FROM THE LIGHTING CIRCUITS.

GENERAL NOTES:

1. NOT ALL EQUIPMENT IS SHOWN IN THE RECORD DRAWINGS. PRELIMINARY FIELD INVESTIGATION INDICATED THAT AN ANALYTICAL INSTRUMENT WITH TWO SENSORS HAS BEEN INSTALLED FOR EACH BASIN. DISCONNECT AND REMOVE SENSORS, INSTRUMENTS, AND CONDUIT/WIRE IN ITS ENTIRETY.

THIS CONFORMED DOCUMENT IS RELEASED FOR THE CONVENIENCE OF THE CONTRACTOR UNDER THE AUTHORITY OF:

K. A. Harutunian 11-01-22

K. A. HARUTUNIAN, P.E. DATE
TX LIC NO. 59181

SEE DISCLAIMER FOR LIMITATIONS OF USE.

CONTRACT DOCUMENTS DATED FEBRUARY 28, 2022, AS PART OF THE BIDDING DOCUMENTS (DRAWINGS AND SPECIFICATIONS) AND SUBSEQUENTLY ISSUED ADDENDA HAVE BEEN MERGED INTO ONE CONFORMING SET OF DOCUMENTS FOR THE CONVENIENCE OF THE CONTRACTOR. IF INCONSISTENCIES OR AMBIGUITIES BETWEEN "CONFORMED" DOCUMENTS AND CONTRACT DOCUMENTS ARE FOUND, THE CONTRACT DOCUMENTS SHALL GOVERN.

This document, and the designs incorporated herein, is an instrument of professional service that has been developed, designed and prepared by Harutunian Engineering, Inc., and is not to be used, in whole or in part, for any other project without giving written notice to Harutunian Engineering, Inc.

REV	DATE	BY	DESCRIPTION
			CONFORMED DOCUMENTS

DESIGNED HEI
DRAWN HEI
CHECKED HEI
DATE NOVEMBER 2022

** ORIGINAL SEALED BY K.A. HARUTUNIAN 02-28-22 TX PE 59181 **

HARUTUNIAN ENGINEERING INCORPORATED
ENGINEERING AND ENVIRONMENTAL CONSULTANTS
8100 CROSS PARK DRIVE
AUSTIN, TEXAS 78754
TBPE REGISTRATION NO. F-2408

carollo
TBPELS No. F-882

CITY OF AUSTIN FOUNDED 1839
CITY OF AUSTIN

CITY OF AUSTIN
WILD HORSE RANCH WWTP EXPANSION
DEMOLITION
AERATION BASIN
AUXILIARY PLAN - DEMOLITION

VERIFY SCALES
BAR IS ONE INCH ON ORIGINAL DRAWING
0 1"
IF NOT ONE INCH ON THIS SHEET, ADJUST SCALES ACCORDINGLY

JOB NO. 10976A.00
DRAWING NO. 30DE01
SHEET NO. 133 OF 464

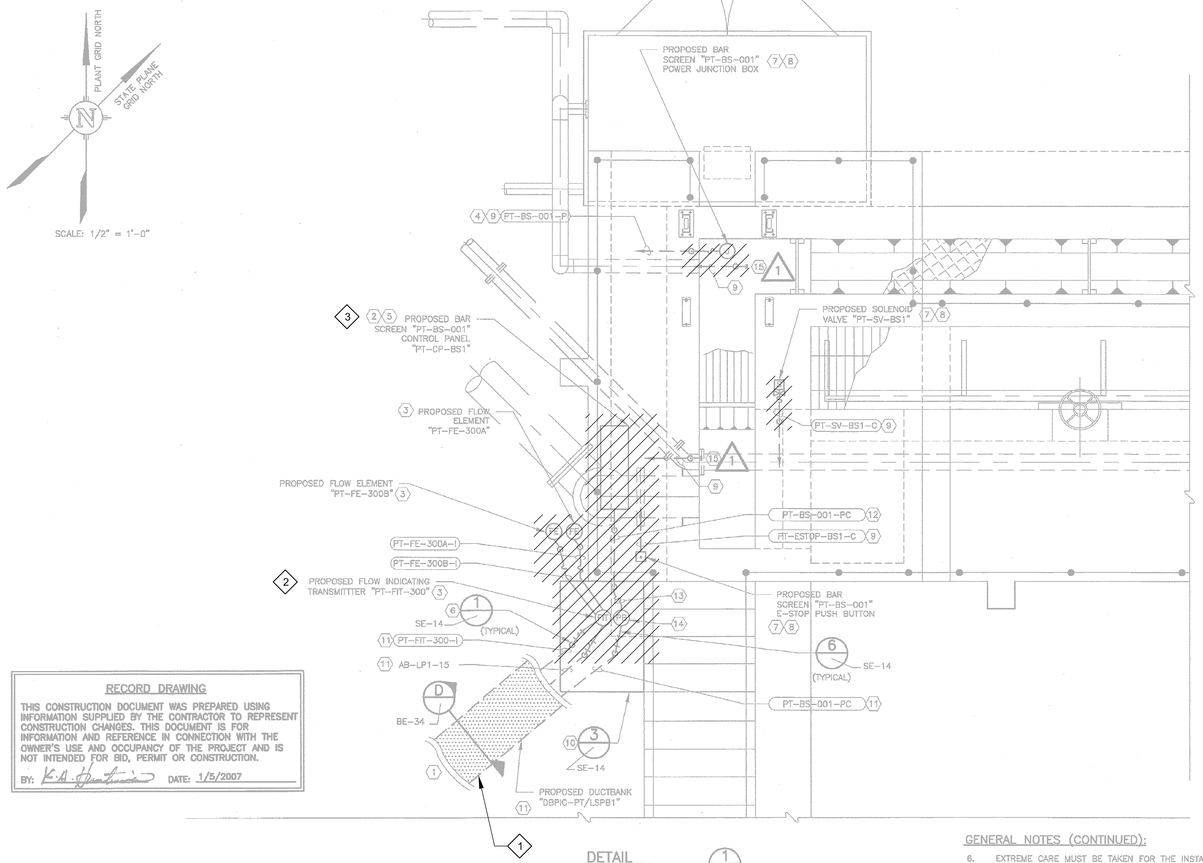

DETAIL 1/DE-1
SCALE: 1/2"=1'-0"

RECORD DRAWING

THIS CONSTRUCTION DOCUMENT WAS PREPARED USING INFORMATION SUPPLIED BY THE CONTRACTOR TO REPRESENT CONSTRUCTION CHANGES. THIS DOCUMENT IS FOR INFORMATION AND REFERENCE IN CONNECTION WITH THE OWNER'S USE AND OCCUPANCY OF THE PROJECT AND IS NOT INTENDED FOR BID, PERMIT OR CONSTRUCTION.

BY: K.A. Harutunian DATE: 1/5/2007

KEY NOTES:

1. PROPOSED DUCT BANK "DBPIC-PT/LSPB1" CONTINUES TO/FROM LIFT STATION. REFER TO SITE PLAN ON DRAWING NO. BE-31.
2. FURNISH AND INSTALL CONDUIT SEALING FITTINGS IMMEDIATELY ADJACENT TO BAR SCREEN CONTROL PANEL ON ALL CONDUIT/WIRE TERMINATING AT PROPOSED CONTROL PANEL AND MAKE ALL FINAL CONNECTIONS. CORE DRILL SLAB TO ACCOMMODATE CONDUIT/WIRE PENETRATION AND PERFORM PENETRATION PER THE DETAILS ON DRAWING NO. SE-15.
3. FURNISH AND INSTALL FLOW TRANSMITTER AND FLOW ELEMENTS PER THE DETAILS ON DRAWING NO. SE-18 AND MAKE ALL FINAL CONNECTIONS. FURNISH AND INSTALL FLOW ELEMENTS TO VERTICALLY ORIENTED MECHANICAL PROCESS PIPE (NOT SHOWN). CLOSELY AND CAREFULLY COORDINATE LOCATION WITH MECHANICAL AND WITH THE MANUFACTURER'S RECOMMENDATIONS.
4. PROPOSED CONDUIT "PT-BS-001-P" TO ROUTE TO/FROM PROPOSED BAR SCREEN POWER JUNCTION BOX. CLOSELY AND CAREFULLY COORDINATE WITH BAR SCREEN MANUFACTURER FOR TERMINATION POINT.
5. FURNISH AND INSTALL THE BAR SCREEN CONTROL PANEL TO THE PROPOSED CONCRETE STRUCTURE PER THE MANUFACTURERS DIAGRAMS/RECOMMENDATIONS AND SIMILAR TO THE DETAILS ON DRAWING NO. SE-14. FURNISH AND INSTALL ALL NECESSARY CONDUIT/WIRE/HARDWARE AND MAKE ALL FINAL CONNECTIONS BETWEEN THE BAR SCREEN CONTROL PANEL AND THE BAR SCREEN SUB-COMPONENTS PER THE MANUFACTURERS WIRING DIAGRAMS AND RECOMMENDATIONS.
6. PERFORM CONDUIT/WIRE STUB-UP FROM DUCT BANK PER THE DETAILS ON DRAWING NO. SE-14. LOCATION OF STUB-UP SHOWN IS APPROXIMATE. LOCATE IMMEDIATELY ADJACENT TO PROPOSED EQUIPMENT.
7. AN ATTEMPT HAS BEEN MADE TO IDENTIFY THE ACTUAL DEVICE REQUIRED. THE DEVICE LOCATION IS APPROXIMATE. THE ACTUAL DEVICE QUANTITY/LOCATION MAY VARY. CLOSELY AND CAREFULLY VERIFY LOCATION AND QUANTITY WITH THE SPECIFICATIONS AND THE EQUIPMENT MANUFACTURER. FURNISH AND INSTALL ALL NECESSARY DEVICE(S), DEVICE(S) INTERCONNECT CONDUIT/WIRE AND MAKE ALL FINAL CONNECTIONS PER THE SPECIFICATIONS, THE MANUFACTURER'S RECOMMENDATIONS, AND THE MANUFACTURER'S WIRING DIAGRAMS.
8. THE CONTRACTOR SHALL SIZE PROPOSED CONDUIT/WIRE PER THE SPECIFICATIONS. CLOSELY AND CAREFULLY COORDINATE DEVICE WIRING REQUIREMENTS WITH THE MANUFACTURER'S WIRING DIAGRAMS AND THE SPECIFICATIONS. CLOSELY AND CAREFULLY COORDINATE CONDUIT/WIRE CONNECTION WITH THE MANUFACTURER AND MAKE ALL FINAL CONNECTIONS. FIELD ROUTE PROPOSED CONDUIT/WIRE PER THE SPECIFICATIONS TO THE SATISFACTION OF THE ENGINEER AND THE OWNER AT NO ADDITIONAL COST TO THE OWNER. CLOSELY AND CAREFULLY COORDINATE ROUTE OF PROPOSED CONDUIT/WIRE, VERIFYING ALL POINTS OF CONNECTION PRIOR TO COMMENCING INSTALLATION.
9. ROUTE CONDUIT/WIRE BELOW CONCRETE WALKWAY. LOCATE ASSOCIATED PULLBOXES (AS REQUIRED) BELOW CONCRETE WALKWAY. CLOSELY AND CAREFULLY COORDINATE ROUTING OF CONDUIT/WIRE AND LOCATIONS OF INSTRUMENTS WITH BAR SCREEN MANUFACTURER BEFORE COMMENCING INSTALLATION ACTIVITIES.
10. FURNISH AND INSTALL OUTDOOR REINFORCED CONCRETE EQUIPMENT PAD PER THE DETAILS ON DRAWING NO. SE-14 FOR MOUNTING FLOW TRANSMITTER.
11. SPACE AND ENCASE IN SAND PER THE DETAILS ON DRAWING NO. SE-8.
12. PROPOSED CONDUIT/WIRE PENETRATES SLAB AND ROUTES SURFACE MOUNTED UNDERNEATH SLAB AND RISES/DECENDS TO CONNECT TO PROPOSED PULLBOX "PT-PBOX-BS1". CORE DRILL SLAB TO ACCOMMODATE CONDUIT/WIRE PENETRATION AND PERFORM PENETRATION PER THE DETAILS ON DRAWING NO. SE-15.
13. FURNISH AND INSTALL LIQUID-TIGHT FLEXIBLE CONDUIT TO INTERCONNECT PROPOSED CONDUIT/WIRE MOUNTED TO AERATION BASIN STRUCTURE TO PROPOSED CONDUIT/WIRE CONNECTING TO PROPOSED PULLBOX "PT-PBOX-BS1". REFER TO SPECIFICATIONS FOR LENGTH AND ADDITIONAL INFORMATION.
14. PROPOSED PULLBOX "PT-PBOX-BS1". PROPOSED PULLBOX IS MINIMALLY SIZED 8" WIDE X 8" HIGH X 8" DEEP. FURNISH AND INSTALL TO PROPOSED SINGLE CONDUIT SUPPORT CHANNEL RACK PER THE DETAILS ON DRAWING NO. SE-14.
15. CONDUIT CAPPED, RESERVED FOR FUTURE USE.

KEY NOTES

1. REFER TO DUCT BANK SECTION DEMOLITION SHEETS (05DE05) THROUGH (05DE08) FOR DEMOLITION DETAILS OF THE DUCT BANK CONTENTS.
2. COORDINATE WITH MECHANICAL TO DISCONNECT AND REMOVE THE FLOW INDICATING TRANSMITTER IN ITS ENTIRETY. DEMOLISH ALL CABLE/WIRE AND EXPOSED CONDUITS IN TIER ENTIRETY. CUT CONDUITS FLUSH WITH EQUIPMENT PAD AND SEAL WITH 50 YEAR NON SHRINK GROUT.
3. DISCONNECT AND REMOVE THE PACKAGED BAR SCREEN AND ALL OF ITS SUB COMPONENTS, INCLUDING BUT NOT LIMITED TO THE PACKAGED CONTROL PANEL AND THE SOLENOID VALVE. CUT CONDUITS FLUSH WITH EQUIPMENT PAD AND SEAL WITH 50 YEAR NON SHRINK GROUT.

REFERENCE DRAWINGS:

BE-31 – ELECTRICAL SITE PLAN

DE-1 – AERATION BASIN POWER AND I&C PLAN

GENERAL NOTES:

1. LOCATIONS/SIZES OF ELECTRICAL EQUIPMENT SHOWN ARE APPROXIMATE. CONTRACTOR SHALL FIELD VERIFY ACTUAL CONDITIONS PRIOR TO COMMENCING CONSTRUCTION.
2. SUPPORT/RACK EXPOSED CONDUIT SYSTEMS PER DETAILS ON DRAWING NO. SE-7.
3. NOT ALL EQUIPMENT IS SHOWN, FOR CLARITY.
4. EXACT LOCATIONS OF MECHANICAL/STRUCTURAL/CIVIL COMPONENTS ARE NOT SHOWN ON THIS DRAWING. REFER TO MECHANICAL/STRUCTURAL/CIVIL DRAWINGS FOR EXACT LOCATIONS OF MECHANICAL/STRUCTURAL/CIVIL ITEMS.
5. CONTRACTOR SHALL SIZE ALL PULLBOXES PER, AND IN ACCORDANCE WITH, THE REQUIREMENTS OF THE NATIONAL ELECTRICAL CODE (N.E.C.).

GENERAL NOTES (CONTINUED):

6. EXTREME CARE MUST BE TAKEN FOR THE INSTALLATION OF THE ELECTRICAL DUCT BANKS SINCE THERE ARE NO AVAILABLE AS BUILT RECORDS OF PROFILES IDENTIFYING THE LOCATION AND INVERT ELEVATIONS OF EXISTING UNDERGROUND ELECTRICAL SYSTEM AND UNDERGROUND MECHANICAL PIPING. ROUTING OF NEW DUCT BANK SHOWN IS BASED ON SCHEMATIC KNOWLEDGE OF THE SIZE OF MECHANICAL PIPING AND THEIR APPROXIMATE SIZE AND/OR LOCATION. NO DATA IS AVAILABLE PERTAINING TO EXISTING UNDERGROUND ELECTRICAL DUCT BANK SYSTEM AND ITS COORDINATION WITH THE UNDERGROUND MECHANICAL SYSTEM. THEREFORE THE CONTRACTOR IS TO EXERCISE EXTREME CARE, VERIFY LOCATION/ROUTING/ELEVATION OF EXISTING UNDERGROUND UTILITIES PRIOR TO COMMENCING FULL SCALE INSTALLATION PROCESS OF THE PROPOSED DUCT BANK SYSTEM. FOLLOWING THE DISCOVERY VERIFICATION OF EXISTING UNDERGROUND UTILITIES, SHOULD ADJUSTMENT/MODIFICATIONS BECOME A NECESSITY TO EITHER THE EXISTING OR PROPOSED SYSTEM (AS APPLICABLE), THE EXISTING DISCOVERED FIELD CONDITIONS MUST BE BROUGHT TO THE ENGINEERS ATTENTION FOR EXECUTION OF THE NECESSARY ADJUSTMENTS/MODIFICATIONS.
7. CONTRACTOR SHALL CLOSELY AND CAREFULLY COORDINATE ROUTE OF PROPOSED CONDUIT/WIRE WITH EXISTING AND PROPOSED CIVIL/MECHANICAL/STRUCTURAL/ELECTRICAL SYSTEMS/COMPONENTS/EQUIPMENT/UTILITIES, ETC.
8. PROPOSED CONDUITS/WIRES ARE SHOWN SCHEMATICALLY FOR CLARITY.

REUSE OF DOCUMENTS
This document and the ideas and designs incorporated herein as an instrument of professional service has been developed, designed and prepared by Harutunian Engineering, Inc. and is not to be used, in whole or part, for any other project without the written authorization of the City of Austin and Harutunian Engineering, Inc. © 2003

HARUTUNIAN ENGINEERING INCORPORATED
ENGINEERING AND ENVIRONMENTAL CONSULTANTS
305 EAST HIGHLAND DRIVE SUITE 500 AUSTIN, TEXAS 78752

NO.	DATE	REVISION	APPROV.
4			
3			
2			
1	1/5/7	RECORD DRAWING	K.A.H.

THE SEAL APPEARING ON THIS DOCUMENT WAS AUTHORIZED BY K. A. HARUTUNIAN, P.E. 59181 ON OCTOBER 16, 2003

WARNING 0 1/2 1 IF THIS BAR DOES NOT MEASURE 1" THEN DRAWING IS NOT TO SCALE

STATE OF TEXAS K. A. HARUTUNIAN 59181 REGISTERED PROFESSIONAL ENGINEER

Dwg. No. DE-4

CITY OF AUSTIN, TEXAS
NORTHEAST INTERIM WASTEWATER TREATMENT PLANT

AERATION BASIN
ENLARGED DETAILS (SHEET 1 OF 1)

Turner Collie & Braden Inc.
ENGINEERS • PLANNERS • PROJECT MANAGERS

Unit PUBLIC WORKS	Scale 1/2"=1'-0"	Date OCTOBER 2003	
Designed HEI	Checked HEI	Job No. 052-122094-0008	
Drawn HEI	Approved HEI	Sheet 115/327	

THIS CONFORMED DOCUMENT IS RELEASED FOR THE CONVENIENCE OF THE CONTRACTOR UNDER THE AUTHORITY OF:

K. A. Harutunian 11-01-22

K. A. HARUTUNIAN, P.E. DATE
TX LIC NO. 59181

SEE DISCLAIMER FOR LIMITATIONS OF USE.

CONTRACT DOCUMENTS DATED FEBRUARY 28, 2022, AS PART OF THE BIDDING DOCUMENTS (DRAWINGS AND SPECIFICATIONS) AND SUBSEQUENTLY ISSUED ADDENDA HAVE BEEN MERGED INTO ONE CONFORMING SET OF DOCUMENTS FOR THE CONVENIENCE OF THE CONTRACTOR. IF INCONSISTENCIES OR AMBIGUITIES BETWEEN "CONFORMED" DOCUMENTS AND CONTRACT DOCUMENTS ARE FOUND, THE CONTRACT DOCUMENTS SHALL GOVERN.

This document, and the designs incorporated herein, is an instrument of professional service that has been developed, designed and prepared by Harutunian Engineering, Inc., and is not to be used, in whole or in part, for any other project without giving written notice to Harutunian Engineering, Inc.

REV	DATE	BY	DESCRIPTION
			CONFORMED DOCUMENTS

DESIGNED HEI
DRAWN HEI
CHECKED HEI
DATE NOVEMBER 2022

** ORIGINAL SEALED BY K.A. HARUTUNIAN 02-28-22 TX PE 59181 **

HARUTUNIAN ENGINEERING INCORPORATED
ENGINEERING AND ENVIRONMENTAL CONSULTANTS
8100 CROSS PARK DRIVE AUSTIN, TEXAS 78754
TBPE REGISTRATION NO. F-2408

carollo® TBPELS No. F-882

CITY OF AUSTIN FOUNDED 1839 **CITY OF AUSTIN**

CITY OF AUSTIN
WILD HORSE RANCH WWTP EXPANSION
DEMOLITION
AERATION BASIN
ENLARGED PLAN - DEMOLITION

VERIFY SCALES
BAR IS ONE INCH ON ORIGINAL DRAWING
0 1"
IF NOT ONE INCH ON THIS SHEET, ADJUST SCALES ACCORDINGLY

JOB NO. 10976A.00
DRAWING NO. 30DE02
SHEET NO. 134 OF 464

CIRCUIT BREAKER PANEL SCHEDULE - "AB-LP-001"

VOLTS: 120/208 AMPS: 100A BUS: MAIN: 50A PHASE/WIRE: 3Φ, 4W

CONDUIT WIRE DESCRIPTION	CIRCUIT BREAKER SIZE	CKT NO.	LOAD DESCRIPTIONS	PHASE A (VA)	PHASE B (VA)	PHASE C (VA)	LOAD DESCRIPTIONS	CKT NO.	CIRCUIT BREAKER SIZE	CONDUIT WIRE DESCRIPTION
1"-(4)#8(CU)+#10(G)	40/2P	1	BOOSTER POLE MOUNTED LIGHTING	630 / 105			AERATION BASIN NO. 1 & 2 WALKWAY LIGHTING	2	20/2P	3/4"-2#10(CU)+#10(G)
		3			630 / 105			4		
	20/2P	5	SPARE			360	AERATION BASIN NO. 1 & 2 RECEPTACLES	6	20/1P	3/4"-2#10(CU)+#10(G)
		7					SPARE	8	20/1P	
1"-2#10(CU)+#10(G)	20/2P	9	SLUDGE HOLDING TANK POLE MOUNTED LIGHTING	210 / 105			LIFT STATION POLE MOUNTED LIGHTING	10	40/2P	1"-2#10(CU)+#10(G)
		11			630 / 105			12		
	20/1P	13	SPARE	180			LIFT STATION RECEPTACLE	14	20/1P	1"-2#10(CU)+#10(G)
1"-2#10(CU)+#10(G)	20/1P	15	PRELIMINARY TREATMENT FLOW TRANSMITTER "FT-ITTA-3201"		105		FUTURE AERATION BASIN NO. 3 & NO. 4 WALKWAY LIGHTING	16	20/2P	
	20/1P	17	SPARE					18		
	20/1P	19	SPARE				FUTURE AERATION BASIN NO. 3 & NO. 4 RECEPTACLES	20	20/1P	
	20/1P	21	SPARE				SPARE	22	20/1P	
	20/1P	23	SPARE				SPARE	24	20/1P	
1"-3#10(CU)+#10(G)	20/2P	25	TRANSIENT VOLTAGE SURGE SUPPRESSOR "AB-TVSS-001"				SPARE	26	20/1P	
		27					SPARE	28	20/1P	
TOTAL CONNECTED VOLT AMPS (VA)				1225	1155	810				

KEY NOTES:

1. ALL WIRING IN COMMON 1-1/4" CONDUIT TO/FROM AERATION BASIN REMOTE POWER CENTER "AB-RPC-001" TO/FROM AERATION BASIN POLE MOUNTED LIGHTING/CONVENIENCE RECEPTACLES.
2. ALL WIRING IN COMMON 1-1/4" CONDUIT TO/FROM LIFT STATION PULL BOX "LS-PBOX-1" TO/FROM AERATION BASIN REMOTE POWER CENTER "AB-RPC-001".
3. ALL WIRING IN COMMON 1-1/4" CONDUIT TO/FROM LIFT STATION PULL BOX "LS-PBOX-1" TO/FROM AERATION BASIN REMOTE POWER CENTER "AB-RPC-001".

GENERAL NOTES:

1. PANELBOARD SHORT CIRCUIT INTERRUPTING RATING IS 10000 A.I.C.
2. CONDUIT SIZE MAY INCREASE FROM THAT SHOWN FOR CONDUIT SYSTEMS ROUTED UNDERGROUND IN DUCT BANK SYSTEM, CONCEALED IN FLOOR SLAB, ETC. REFER TO THE PLANS AND THE SPECIFICATIONS FOR ADDITIONAL INFORMATION.

REFERENCE DRAWINGS:

HE-9 – ONE-LINE DIAGRAMS

DE-2 – EQUIPMENT LOCATION

SE-9 – TYPICAL REMOTE POWER CENTER INSTALLATION DETAIL

BE-31 – ENLARGED ELECTRICAL SITE PLAN

KEY NOTES

1. DISCONNECT AND REMOVE EXISTING PANELBOARD "AB-LP-001" IN ITS ENTIRETY. REFER TO DEMOLITION PLAN DRAWING NO. [30DE01] FOR LOCATION OF PANELBOARD AND ADDITIONAL INFORMATION.

RECORD DRAWING

THIS CONSTRUCTION DOCUMENT WAS PREPARED USING INFORMATION SUPPLIED BY THE CONTRACTOR TO REPRESENT CONSTRUCTION CHANGES. THIS DOCUMENT IS FOR INFORMATION AND REFERENCE IN CONNECTION WITH THE OWNER'S USE AND OCCUPANCY OF THE PROJECT AND IS NOT INTENDED FOR BID, PERMIT OR CONSTRUCTION.

BY: K.A. Harutunian DATE: 1/5/2007

REUSE OF DOCUMENTS
This document and the ideas and designs incorporated herein as an instrument of professional service has been developed, designed and prepared by Harutunian Engineering, Inc. and is not to be used, in whole or part, for any other project without the written authorization of the City of Austin and Harutunian Engineering, Inc. © 2003

HARUTUNIAN ENGINEERING INCORPORATED
ENGINEERING AND ENVIRONMENTAL CONSULTANTS
309 EAST HUNTLAND DRIVE
SUITE 300
AUSTIN, TEXAS
78752

NO.	DATE	REVISION	APPROV.
4			
3			
2			
1			

WARNING
0 1/2 1
IF THIS BAR DOES NOT MEASURE 1" THEN DRAWING IS NOT TO SCALE

K. A. HARUTUNIAN
STATE OF TEXAS
59181
REGISTERED
PROFESSIONAL ENGINEER
10/15/2003

Dwg. No. RE-38

CITY OF AUSTIN, TEXAS
NORTHEAST INTERIM WASTEWATER TREATMENT PLANT

AERATION BASIN PANEL SCHEDULES (SHEET 1 OF 1)

Turner Collie & Braden Inc.
ENGINEERS • PLANNERS • PROJECT MANAGERS

Unit PUBLIC WORKS	Scale NONE	Date OCTOBER 2003	
Designed HEI	Checked HEI	Job No. 052-122094-0008	
Drawn HEI	Approved HEI	Sheet 252/327	

THIS CONFORMED DOCUMENT IS RELEASED FOR THE CONVENIENCE OF THE CONTRACTOR UNDER THE AUTHORITY OF:

K. A. Harutunian 11-01-22

K. A. HARUTUNIAN, P.E. DATE
TX LIC NO. 59181

SEE DISCLAIMER FOR LIMITATIONS OF USE.

CONTRACT DOCUMENTS DATED FEBRUARY 28, 2022, AS PART OF THE BIDDING DOCUMENTS (DRAWINGS AND SPECIFICATIONS) AND SUBSEQUENTLY ISSUED ADDENDA HAVE BEEN MERGED INTO ONE CONFORMING SET OF DOCUMENTS FOR THE CONVENIENCE OF THE CONTRACTOR. IF INCONSISTENCIES OR AMBIGUITIES BETWEEN "CONFORMED" DOCUMENTS AND CONTRACT DOCUMENTS ARE FOUND, THE CONTRACT DOCUMENTS SHALL GOVERN.

This document, and the designs incorporated herein, is an instrument of professional service that has been developed, designed and prepared by Harutunian Engineering, Inc., and is not to be used, in whole or in part, for any other project without giving written notice to Harutunian Engineering, Inc.

REV	DATE	BY	DESCRIPTION
			CONFORMED DOCUMENTS

DESIGNED HEI
DRAWN HEI
CHECKED HEI
DATE NOVEMBER 2022

** ORIGINAL SEALED BY K.A. HARUTUNIAN 02-28-22 TX PE 59181 **

HARUTUNIAN ENGINEERING INCORPORATED
ENGINEERING AND ENVIRONMENTAL CONSULTANTS
8100 CROSS PARK DRIVE
AUSTIN, TEXAS 78754
TBPE REGISTRATION NO. F-2408

carollo
TBPELS No. F-882

CITY OF AUSTIN
FOUNDED 1839
CITY OF AUSTIN

CITY OF AUSTIN
WILD HORSE RANCH WWTP EXPANSION
DEMOLITION
AERATION BASIN
PANEL SCHEDULES - DEMOLITION

VERIFY SCALES
BAR IS ONE INCH ON ORIGINAL DRAWING
0 1"
IF NOT ONE INCH ON THIS SHEET, ADJUST SCALES ACCORDINGLY

JOB NO. 10976A.00
DRAWING NO. 30DE03
SHEET NO. 135 OF 464

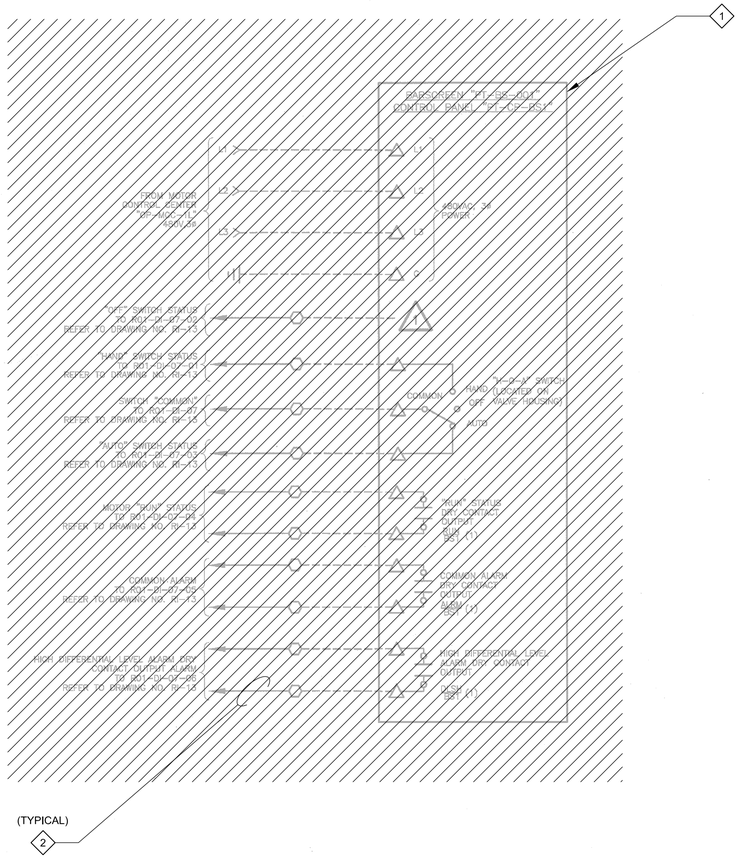

KEY NOTES

1. DISCONNECT AND REMOVE EXISTING CONTROL PANEL AND ASSOCIATED SUB COMPONENTS (I.E. SOLENOID VALVE, MOTORS, CONTROL DEVICES, ETC.) IN THEIR ENTIRETY. PLEASE BE AWARE THAT NOT ALL SUB-COMPONENTS OF THE SYSTEM HAVE BEEN SHOWN ON THIS DRAWING.
2. DISCONNECT AND REMOVE EXISTING ASSOCIATED FIELD WIRING IN ITS ENTIRETY. REFER TO PLAN DRAWINGS FOR ADDITIONAL INFORMATION.

WIRING AND TERMINAL DEVICE LEGEND:

- ○ DEVICE WIRING TERMINAL
- ⬡ TERMINAL BLOCK LOCATED IN CONTROL PANEL "OP-MCP-001". ANY DEVICE SHOWN WITH DEVICE WIRING TERMINALS CONNECTED DIRECTLY TO THESE SYMBOLS WITH SOLID LINES IS ALSO LOCATED IN "OP-MCP-001".
- □ TERMINAL BLOCK LOCATED IN 480 VOLT MOTOR CONTROL CENTER "OP-MCC-01L" OR "OP-MCC-01R" AS APPLICABLE. ANY DEVICE SHOWN WITH DEVICE WIRING TERMINALS CONNECTED DIRECTLY TO THESE SYMBOLS WITH SOLID LINES IS ALSO LOCATED IN "OP-MCC-01L" OR "OP-MCC-01R" AS APPLICABLE.
- △ TERMINAL BLOCK LOCATED IN FIELD MOUNTED EQUIPMENT AS NOTED. ANY DEVICE SHOWN WITH DEVICE WIRING TERMINALS CONNECTED DIRECTLY TO THESE SYMBOLS WITH SOLID LINES IS LOCATED IN OR ON THE EQUIPMENT.
- ---- FIELD WIRING

GENERAL NOTES:

1. ALL FIELD DEVICES ARE NOT SHOWN ON THIS DRAWING. THE ACTUAL FIELD DEVICE QUANTITY/LOCATION MAY VARY. IT IS THE RESPONSIBILITY OF THE CONTRACTOR TO FURNISH AND INSTALL ALL NECESSARY FIELD DEVICE(S), FIELD DEVICE(S) INTERCONNECT CONDUIT/WIRE AND MAKE ALL FINAL CONNECTIONS PER THE SPECIFICATIONS, THE MANUFACTURER'S RECOMMENDATIONS, AND THE MANUFACTURER'S WIRING DIAGRAMS. THE CONTRACTOR SHALL SIZE PROPOSED CONDUIT/WIRE PER THE SPECIFICATIONS. CLOSELY AND CAREFULLY COORDINATE FIELD DEVICE WIRING REQUIREMENTS WITH THE MANUFACTURER'S WIRING DIAGRAMS AND THE SPECIFICATIONS. CLOSELY AND CAREFULLY COORDINATE CONDUIT/WIRE CONNECTION WITH THE MANUFACTURER AND MAKE ALL FINAL CONNECTIONS. FIELD ROUTE PROPOSED CONDUIT/WIRE PER THE SPECIFICATIONS TO THE SATISFACTION OF THE ENGINEER AND THE OWNER AT NO ADDITIONAL COST TO THE OWNER. CLOSELY AND CAREFULLY COORDINATE ROUTE OF PROPOSED CONDUIT/WIRE, VERIFYING ALL POINTS OF CONNECTION PRIOR TO COMMENCING INSTALLATION. ALSO REFER TO THE APPLICABLE FLOOR PLAN DRAWINGS FOR ADDITIONAL INFORMATION.

REFERENCE DRAWINGS:

HE-2 – HE-9 – ONE-LINE DIAGRAMS

RI-13 – PLC I/O WIRING SCHEMATICS

RECORD DRAWING

THIS CONSTRUCTION DOCUMENT WAS PREPARED USING INFORMATION SUPPLIED BY THE CONTRACTOR TO REPRESENT CONSTRUCTION CHANGES. THIS DOCUMENT IS FOR INFORMATION AND REFERENCE IN CONNECTION WITH THE OWNER'S USE AND OCCUPANCY OF THE PROJECT AND IS NOT INTENDED FOR BID, PERMIT OR CONSTRUCTION.

BY: K.A. Harutunian DATE: 1/5/2007

REUSE OF DOCUMENTS
This document and the ideas and designs incorporated herein as an instrument of professional service has been developed, designed and prepared by Harutunian Engineering, Inc. and is not to be used, in whole or part, for any other project without the written authorization of the City of Austin and Harutunian Engineering, Inc. © 2003

HARUTUNIAN ENGINEERING INCORPORATED
ENGINEERING AND ENVIRONMENTAL CONSULTANTS
305 EAST HUNTLAND DRIVE SUITE 500 AUSTIN, TEXAS 78752

NO.	DATE	REVISION	APPROV.
4			
3			
2			
1	1/5/7	RECORD DRAWING	K.A.H.

THE SEAL APPEARING ON THIS DOCUMENT WAS AUTHORIZED BY K. A. HARUTUNIAN, P.E. 59181 ON OCTOBER 15, 2003

WARNING
0 1/2 1
IF THIS BAR DOES NOT MEASURE 1" THEN DRAWING IS NOT TO SCALE

STATE OF TEXAS · K. A. HARUTUNIAN · 59181 · REGISTERED · PROFESSIONAL ENGINEER

CITY OF AUSTIN, TEXAS
NORTHEAST INTERIM WASTEWATER TREATMENT PLANT

BARSCREEN "PT-BS-001"
FIELD WIRING SCHEMATIC (SHEET 1 OF 1)

Turner Collie & Braden Inc.
ENGINEERS • PLANNERS • PROJECT MANAGERS

Unit PUBLIC WORKS	Scale NONE	Date OCTOBER 2003	
Designed HEI	Checked HEI	Job No. 052-122094-000B	
Drawn HEI	Approved HEI	Sheet 239/327	

Drg. No. RE-25

THIS CONFORMED DOCUMENT IS RELEASED FOR THE CONVENIENCE OF THE CONTRACTOR UNDER THE AUTHORITY OF:

K. A. HARUTUNIAN, P.E.
TX LIC NO. 59181

11-01-22
DATE

SEE DISCLAIMER FOR LIMITATIONS OF USE.

CONTRACT DOCUMENTS DATED FEBRUARY 28, 2022, AS PART OF THE BIDDING DOCUMENTS (DRAWINGS AND SPECIFICATIONS) AND SUBSEQUENTLY ISSUED ADDENDA HAVE BEEN MERGED INTO ONE CONFORMING SET OF DOCUMENTS FOR THE CONVENIENCE OF THE CONTRACTOR. IF INCONSISTENCIES OR AMBIGUITIES BETWEEN "CONFORMED" DOCUMENTS AND CONTRACT DOCUMENTS ARE FOUND, THE CONTRACT DOCUMENTS SHALL GOVERN.

This document, and the designs incorporated herein, is an instrument of professional service that has been developed, designed and prepared by Harutunian Engineering, Inc., and is not to be used, in whole or in part, for any other project without giving written notice to Harutunian Engineering, Inc.

REV	DATE	BY	DESCRIPTION
			CONFORMED DOCUMENTS

DESIGNED HEI
DRAWN HEI
CHECKED HEI
DATE NOVEMBER 2022

** ORIGINAL SEALED BY K.A. HARUTUNIAN 02-28-22 TX PE 59181 **

HARUTUNIAN ENGINEERING INCORPORATED
ENGINEERING AND ENVIRONMENTAL CONSULTANTS
8100 CROSS PARK DRIVE AUSTIN, TEXAS 78754
TBPE REGISTRATION NO. F-2408

carollo
TBPELS No. F-882

CITY OF AUSTIN
FOUNDED 1839

CITY OF AUSTIN

CITY OF AUSTIN
WILD HORSE RANCH WWTP EXPANSION
DEMOLITION
BAR SCREEN CONTROL PANEL
FIELD INTERFACE WIRING SCHEMATIC - DEMOLITION

VERIFY SCALES
BAR IS ONE INCH ON ORIGINAL DRAWING
0 1"
IF NOT ONE INCH ON THIS SHEET, ADJUST SCALES ACCORDINGLY

JOB NO. 10976A.00
DRAWING NO. 30DN01
SHEET NO. 136 OF 464

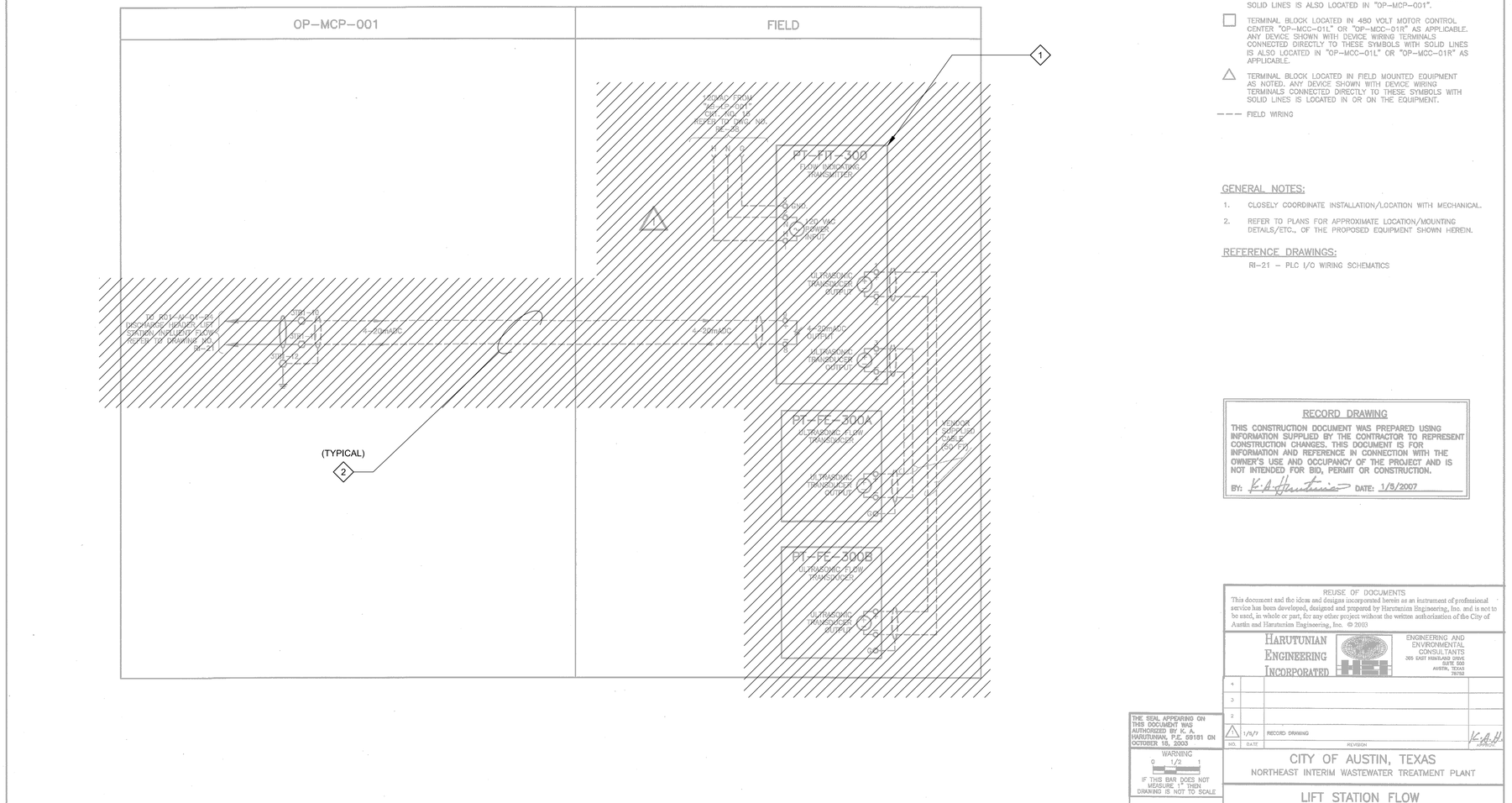

KEY NOTES

1. DISCONNECT AND REMOVE THE FLOW INDICATING TRANSMITTER IN ITS ENTIRETY.
2. DISCONNECT AND REMOVE EXISTING ASSOCIATED FIELD WIRING IN ITS ENTIRETY. REFER TO PLAN DRAWINGS FOR ADDITIONAL REQUIREMENTS AND INFORMATION.

WIRING AND TERMINAL DEVICE LEGEND:

- DEVICE WIRING TERMINAL
- TERMINAL BLOCK LOCATED IN CONTROL PANEL "OP-MCP-001". ANY DEVICE SHOWN WITH DEVICE WIRING TERMINALS CONNECTED DIRECTLY TO THESE SYMBOLS WITH SOLID LINES IS ALSO LOCATED IN "OP-MCP-001".
- TERMINAL BLOCK LOCATED IN 480 VOLT MOTOR CONTROL CENTER "OP-MCC-01L" OR "OP-MCC-01R" AS APPLICABLE. ANY DEVICE SHOWN WITH DEVICE WIRING TERMINALS CONNECTED DIRECTLY TO THESE SYMBOLS WITH SOLID LINES IS ALSO LOCATED IN "OP-MCC-01L" OR "OP-MCC-01R" AS APPLICABLE.
- TERMINAL BLOCK LOCATED IN FIELD MOUNTED EQUIPMENT AS NOTED. ANY DEVICE SHOWN WITH DEVICE WIRING TERMINALS CONNECTED DIRECTLY TO THESE SYMBOLS WITH SOLID LINES IS LOCATED IN OR ON THE EQUIPMENT.
- FIELD WIRING

GENERAL NOTES:

1. CLOSELY COORDINATE INSTALLATION/LOCATION WITH MECHANICAL.
2. REFER TO PLANS FOR APPROXIMATE LOCATION/MOUNTING DETAILS/ETC., OF THE PROPOSED EQUIPMENT SHOWN HEREIN.

REFERENCE DRAWINGS:

RI-21 – PLC I/O WIRING SCHEMATICS

RECORD DRAWING

THIS CONSTRUCTION DOCUMENT WAS PREPARED USING INFORMATION SUPPLIED BY THE CONTRACTOR TO REPRESENT CONSTRUCTION CHANGES. THIS DOCUMENT IS FOR INFORMATION AND REFERENCE IN CONNECTION WITH THE OWNER'S USE AND OCCUPANCY OF THE PROJECT AND IS NOT INTENDED FOR BID, PERMIT OR CONSTRUCTION.

BY: K.A. Harutunian DATE: 1/8/2007

REUSE OF DOCUMENTS
This document and the ideas and designs incorporated herein as an instrument of professional service has been developed, designed and prepared by Harutunian Engineering, Inc. and is not to be used, in whole or part, for any other project without the written authorization of the City of Austin and Harutunian Engineering, Inc. © 2003

HARUTUNIAN ENGINEERING INCORPORATED
ENGINEERING AND ENVIRONMENTAL CONSULTANTS
305 EAST HIGHLAND DRIVE
SUITE A
AUSTIN, TEXAS 78752

NO.	DATE	REVISION	APPROVED
4			
3			
2			
1	1/8/7	RECORD DRAWING	K.A.H.

THE SEAL APPEARING ON THIS DOCUMENT WAS AUTHORIZED BY K. A. HARUTUNIAN, P.E. 59181 ON OCTOBER 18, 2003

WARNING
0 1/2 1
IF THIS BAR DOES NOT MEASURE 1" THEN DRAWING IS NOT TO SCALE

STATE OF TEXAS · K. A. HARUTUNIAN · 59181 · REGISTERED PROFESSIONAL ENGINEER

Dwg. No. RI-3

CITY OF AUSTIN, TEXAS
NORTHEAST INTERIM WASTEWATER TREATMENT PLANT

LIFT STATION FLOW
INSTRUMENT WIRING SCHEMATIC

Turner Collie & Braden Inc.
ENGINEERS • PLANNERS • PROJECT MANAGERS

Unit PUBLIC WORKS	Scale NONE	Date OCTOBER 2003	
Designed HEI	Checked HEI	Job No. 052-122094-0008	
Drawn HEI	Approved HEI	Sheet 255/327	

THIS CONFORMED DOCUMENT IS RELEASED FOR THE CONVENIENCE OF THE CONTRACTOR UNDER THE AUTHORITY OF:

K. A. HARUTUNIAN, P.E.
TX LIC NO. 59181

11-01-22
DATE

SEE DISCLAIMER FOR LIMITATIONS OF USE.

CONTRACT DOCUMENTS DATED FEBRUARY 28, 2022, AS PART OF THE BIDDING DOCUMENTS (DRAWINGS AND SPECIFICATIONS) AND SUBSEQUENTLY ISSUED ADDENDA HAVE BEEN MERGED INTO ONE CONFORMING SET OF DOCUMENTS FOR THE CONVENIENCE OF THE CONTRACTOR. IF INCONSISTENCIES OR AMBIGUITIES BETWEEN "CONFORMED" DOCUMENTS AND CONTRACT DOCUMENTS ARE FOUND, THE CONTRACT DOCUMENTS SHALL GOVERN.

This document, and the designs incorporated herein, is an instrument of professional service that has been developed, designed and prepared by Harutunian Engineering, Inc., and is not to be used, in whole or in part, for any other project without giving written notice to Harutunian Engineering, Inc.

REV	DATE	BY	DESCRIPTION
			CONFORMED DOCUMENTS

DESIGNED HEI
DRAWN HEI
CHECKED HEI
DATE NOVEMBER 2022

** ORIGINAL SEALED BY K.A. HARUTUNIAN 02-28-22 TX PE 59181 **

HARUTUNIAN ENGINEERING INCORPORATED
ENGINEERING AND ENVIRONMENTAL CONSULTANTS
8100 CROSS PARK DRIVE
AUSTIN, TEXAS 78754
TBPE REGISTRATION NO. F-2408

carollo
TBPELS No. F-882

CITY OF AUSTIN
FOUNDED 1839
CITY OF AUSTIN

CITY OF AUSTIN
WILD HORSE RANCH WWTP EXPANSION
DEMOLITION
AERATION BASIN
INSTRUMENT WIRING SCHEMATICS - DEMOLITION

VERIFY SCALES
BAR IS ONE INCH ON ORIGINAL DRAWING
0 1"
IF NOT ONE INCH ON THIS SHEET, ADJUST SCALES ACCORDINGLY

JOB NO. 10976A.00
DRAWING NO. 30DN02
SHEET NO. 137 OF 464

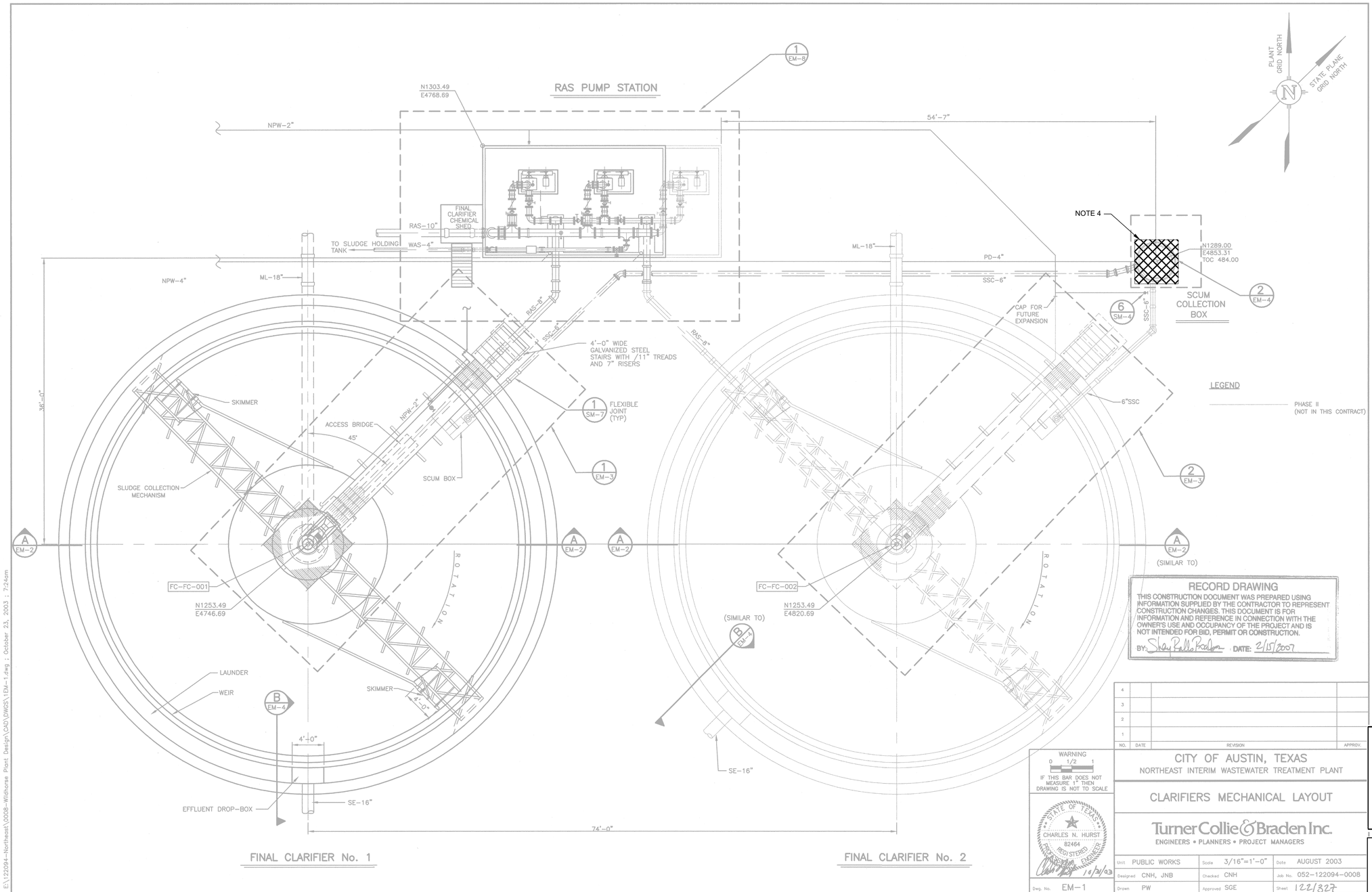

NOTES:

1. THIS IS A RECORD DRAWING FROM A PREVIOUS CONTRACT. ACTUAL FIELD CONDITIONS MAY BE DIFFERENT FROM THOSE SHOWN ON THIS DRAWING. CONTRACTOR TO FIELD VERIFY INSTALLED CONDITIONS IMPACTED BY OR IMPACTING THIS WORK PRIOR TO INITIATING THE WORK. CONTRACTOR SHALL REFER TO CONSTRUCTION DOCUMENTS FOR RESPONSIBILITIES RELATIVE TO VERIFICATION OF EXISTING FACILITIES AND COORDINATION WITH PLANT OPERATION.
2. COORDINATES SHOWN ON THIS RECORD DRAWING MAY NOT MATCH THE PLANT GRID ESTABLISHED FOR THIS PROJECT. CONTRACTOR TO FIELD VERIFY INSTALLED CONDITIONS IMPACTED BY OR IMPACTING THIS WORK PRIOR TO INITIATING THE WORK.
3. CONTRACTOR SHALL REFER TO SPECIFICATION 01140 - WORK RESTRICTIONS FOR SHUTDOWN REQUIREMENTS AND SEQUENCING OF DEMOLITION IN ORDER TO ALLOW THE PLANT TO REMAIN IN SERVICE DURING CONSTRUCTION.
4. CONTRACTOR SHALL EXCAVATE AND REMOVE EXISTING SCUM COLLECTION BOX IN ITS ENTIRETY. 4" PD AND 6" SSC PIPING SHALL BE REMOVED 5 FEET OUTSIDE THE EDGE OF THE STRUCTURE. REFER TO YARD PIPING DEMOLITION SHEETS FOR EXTENT OF 4" PD AND 6" SSC DEMOLITION IN THE YARD.

LEGEND

DEMOLITION

RECORD DRAWING
THIS CONSTRUCTION DOCUMENT WAS PREPARED USING INFORMATION SUPPLIED BY THE CONTRACTOR TO REPRESENT CONSTRUCTION CHANGES. THIS DOCUMENT IS FOR INFORMATION AND REFERENCE IN CONNECTION WITH THE OWNER'S USE AND OCCUPANCY OF THE PROJECT AND IS NOT INTENDED FOR BID, PERMIT OR CONSTRUCTION.
BY: Shay Pallo Braden DATE: 2/15/2007

NO.	DATE	REVISION	APPROV.
4			
3			
2			
1			

WARNING
0 1/2 1
IF THIS BAR DOES NOT MEASURE 1" THEN DRAWING IS NOT TO SCALE

STATE OF TEXAS
CHARLES N. HURST
82464
REGISTERED ENGINEER
10/3/03

CITY OF AUSTIN, TEXAS
NORTHEAST INTERIM WASTEWATER TREATMENT PLANT

CLARIFIERS MECHANICAL LAYOUT

Turner Collie & Braden Inc.
ENGINEERS • PLANNERS • PROJECT MANAGERS

Unit PUBLIC WORKS	Scale 3/16"=1'-0"	Date AUGUST 2003	
Designed CNH, JNB	Checked CNH	Job No. 052-122094-0008	
Drawn PW	Approved SGE	Sheet 122/327	
Dwg. No. EM-1			

THIS CONFORMED DOCUMENT IS RELEASED FOR THE CONVENIENCE OF THE CONTRACTOR UNDER THE AUTHORITY OF:

Casey Wauters 11-01-22
CASEY G. WAUTERS, P.E. DATE
TX LIC NO. 93889

SEE DISCLAIMER FOR LIMITATIONS OF USE.

CONTRACT DOCUMENTS DATED JUNE 10, 2022, AS PART OF THE BIDDING DOCUMENTS (DRAWINGS AND SPECIFICATIONS) AND SUBSEQUENTLY ISSUED ADDENDA HAVE BEEN MERGED INTO ONE CONFORMING SET OF DOCUMENTS FOR THE CONVENIENCE OF THE CONTRACTOR. IF INCONSISTENCIES OR AMBIGUITIES BETWEEN "CONFORMED" DOCUMENTS AND CONTRACT DOCUMENTS ARE FOUND, THE CONTRACT DOCUMENTS SHALL GOVERN.

REV	DATE	BY	DESCRIPTION
			CONFORMED DOCUMENTS

DESIGNED CW
DRAWN AW
CHECKED SGE
DATE FEBRUARY 2022

** ORIGINAL SEALED BY CASEY G. WAUTERS, P.E. 2/28/2022 TX PE 93889 **

AECOM TECHNICAL SERVICES INC.
13640 BRIARWICK DRIVE, SUITE 200
AUSTIN, TEXAS 78729
WWW.AECOM.COM
TBPE REG. NO. F-3580

carollo
TBPE No. F-882

CITY OF AUSTIN
FOUNDED 1839

CITY OF AUSTIN

CITY OF AUSTIN
WILD HORSE RANCH WWTP EXPANSION
DEMOLITION
EXISTING SECONDARY CLARIFIER DEMOLITION PLAN

VERIFY SCALES
BAR IS ONE INCH ON ORIGINAL DRAWING
0 1"
IF NOT ONE INCH ON THIS SHEET, ADJUST SCALES ACCORDINGLY

JOB NO. 10976A.10
DRAWING NO. 40D01
SHEET NO. 138 OF 464

LAST SAVED BY: dselvert

PROJECT NO. 9585A10 FILE NAME: 9585A10_SheetSeed.dgn

E:\122094-Northeast\0008-Wildhorse Plant Design\CAD\DWGS\EM-1.dwg ; October 23, 2003 ; 7:24am

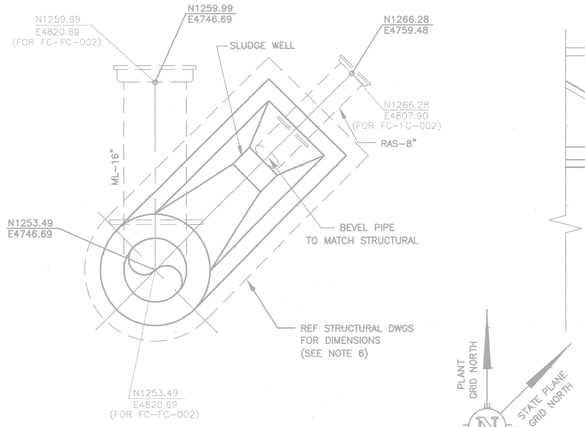

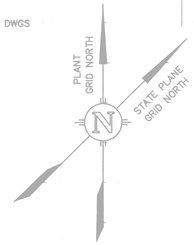

DETAIL 1 EM-3
SCALE : NTS

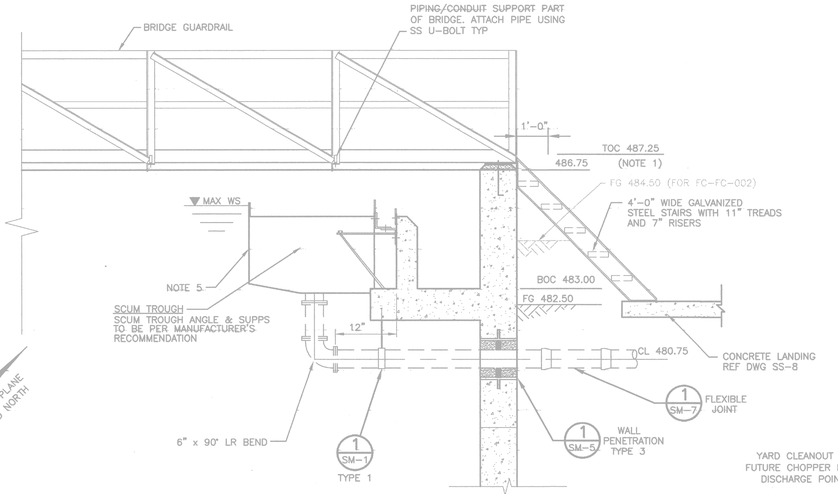

SECTION A EM-3
SCALE : 1/2"=1'-0"

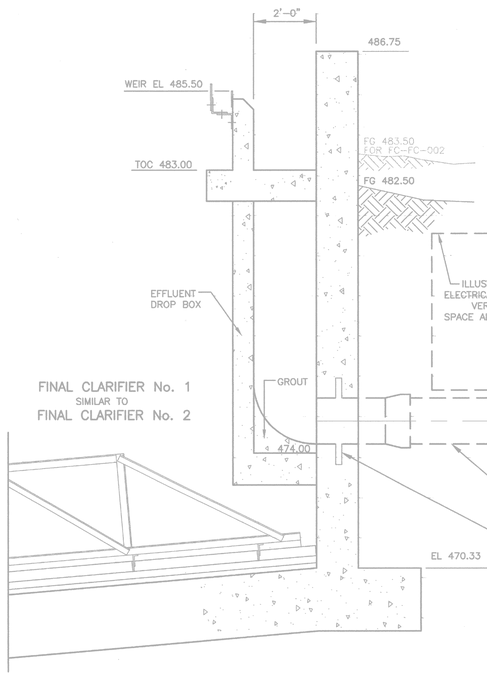

SECTION B EM-1
SCALE : 1/2"=1'-0"

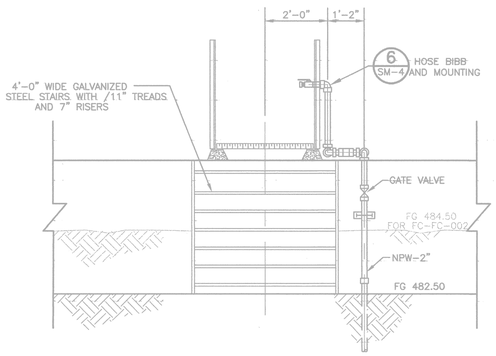

SECTION C EM-3
SCALE : 1/2"=1'-0"

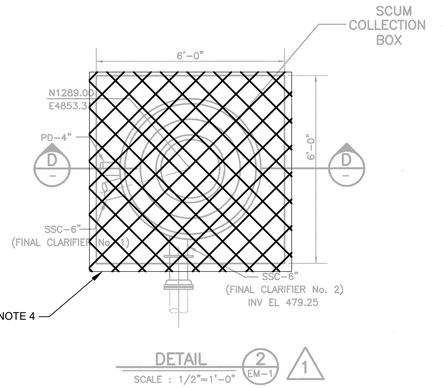

DETAIL 2 EM-1 1
SCALE : 1/2"=1'-0"

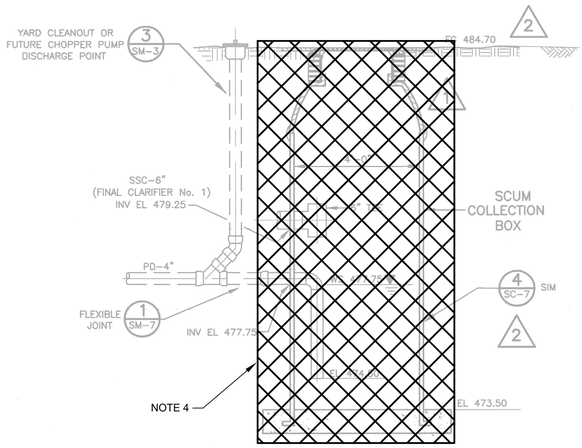

SECTION D —
SCALE : 1/2"=1'-0"

LEGEND

PHASE II
(NOT IN THIS CONTRACT)

NOTES:

1. ADJUST BRIDGE TO MAINTAIN TOP OF GRATING AT ELEVATION 527.25. PROVIDE SUFFICIENT NON-SHRINK GROUT TO RAISE BRIDGE TO CORRECT ELEVATION.
2. COORDINATE INSTALLATION OF SCUM SPRAY SYSTEM WITH INSTALLATION OF SCUM BOX AND ACCESS BRIDGE.
3. SCUM BAFFLE AND WEIR PLATE TO BE CONTINUOUS AROUND PERIMETER OF BASIN.
4. SCUM SPRAY/NPW PIPING TO BE GALVANIZED STEEL.
5. DRILL 1" DIA. HOLE IN SCUM TROUGH. LOCATE HOLE AT THE MID-DEPTH OF THE SCUM TROUGH, TO ALLOW CONTINUOUS FLOW FROM THE CLARIFIER, BELOW THE SCUM LAYER.
6. REFERENCE CLARIFIER PLAN FOR HOPPER ORIENTATION.

RECORD DRAWING
THIS CONSTRUCTION DOCUMENT WAS PREPARED USING INFORMATION SUPPLIED BY THE CONTRACTOR TO REPRESENT CONSTRUCTION CHANGES. THIS DOCUMENT IS FOR INFORMATION AND REFERENCE IN CONNECTION WITH THE OWNER'S USE AND OCCUPANCY OF THE PROJECT AND IS NOT INTENDED FOR BID, PERMIT OR CONSTRUCTION.
BY: Stacy Reilly Parker DATE: FEBRUARY 15, 2007

NOTES:

1. THIS IS A RECORD DRAWING FROM A PREVIOUS CONTRACT. ACTUAL FIELD CONDITIONS MAY BE DIFFERENT FROM THOSE SHOWN ON THIS DRAWING. CONTRACTOR TO FIELD VERIFY INSTALLED CONDITIONS IMPACTED BY OR IMPACTING THIS WORK PRIOR TO INITIATING THE WORK. CONTRACTOR SHALL REFER TO CONSTRUCTION DOCUMENTS FOR RESPONSIBILITIES RELATIVE TO VERIFICATION OF EXISTING FACILITIES AND COORDINATION WITH PLANT OPERATION.
2. COORDINATES SHOWN ON THIS RECORD DRAWING MAY NOT MATCH THE PLANT GRID ESTABLISHED FOR THIS PROJECT. CONTRACTOR TO FIELD VERIFY INSTALLED CONDITIONS IMPACTED BY OR IMPACTING THIS WORK PRIOR TO INITIATING THE WORK.
3. CONTRACTOR SHALL REFER TO SPECIFICATION 01140 - WORK RESTRICTIONS FOR SHUTDOWN REQUIREMENTS AND SEQUENING OF DEMOLITION IN ORDER TO ALLOW THE PLANT TO REMAIN IN SERVICE DURING CONSTRUCTION.
4. CONTRACTOR SHALL EXCAVATE AND REMOVE EXISTING SCUM COLLECTION BOX IN ITS ENTIRETY. 4" PD AND 6" SSC PIPING SHALL BE REMOVED 5 FEET OUTSIDE THE EDGE OF THE STRUCTURE. REFER TO YARD PIPING DEMOLITION SHEETS FOR EXTENT OF 4" PD AND 6" SSC DEMOLITION IN THE YARD.

LEGEND

DEMOLITION

NO.	DATE	REVISION	APPROV.
4			
3			
2	2/09/07	RECORD DRAWING	SK
1	11/25/03	ADDENDUM No. 2	CNH

THE SEAL APPEARING ON THIS DOCUMENT WAS AUTHORIZED BY CHARLES N. HURST, P.E. 82464 ON NOVEMBER 26, 2003

WARNING
0 1/2 1
IF THIS BAR DOES NOT MEASURE 1" THEN DRAWING IS NOT TO SCALE

STATE OF TEXAS
CHARLES N. HURST
82464
REGISTERED
PROFESSIONAL ENGINEER

Dwg. No. EM-4

CITY OF AUSTIN, TEXAS
NORTHEAST INTERIM WASTEWATER TREATMENT PLANT

DETAILS – SHEET 2

Turner Collie & Braden Inc.
ENGINEERS • PLANNERS • PROJECT MANAGERS

Unit PUBLIC WORKS	Scale AS NOTED	Date AUGUST 2003	
Designed SMR, SDN	Checked CNH	Job No. 052-122094-0008	
Drawn PW	Approved SGE	Sheet 125/327	

THIS CONFORMED DOCUMENT IS RELEASED FOR THE CONVENIENCE OF THE CONTRACTOR UNDER THE AUTHORITY OF:

CASEY G. WAUTERS, P.E. 11-01-22
TX LIC NO. 93889 DATE

SEE DISCLAIMER FOR LIMITATIONS OF USE.

CONTRACT DOCUMENTS DATED JUNE 10, 2022, AS PART OF THE BIDDING DOCUMENTS (DRAWINGS AND SPECIFICATIONS) AND SUBSEQUENTLY ISSUED ADDENDA HAVE BEEN MERGED INTO ONE CONFORMING SET OF DOCUMENTS FOR THE CONVENIENCE OF THE CONTRACTOR. IF INCONSISTENCIES OR AMBIGUITIES BETWEEN "CONFORMED" DOCUMENTS AND CONTRACT DOCUMENTS ARE FOUND, THE CONTRACT DOCUMENTS SHALL GOVERN.

REV	DATE	BY	DESCRIPTION
			CONFORMED DOCUMENTS

DESIGNED CW
DRAWN AW
CHECKED SGE
DATE FEBRUARY 2022

** ORIGINAL SEALED BY CASEY G. WAUTERS, P.E. 2/28/2022 TX PE 93889 **

AECOM TECHNICAL SERVICES INC.
13640 BRIARWICK DRIVE, SUITE 200
AUSTIN, TEXAS 78729
WWW.AECOM.COM
TBPE REG. NO. F-3580

carollo
TBPE No. F-882

CITY OF AUSTIN
FOUNDED 1839

CITY OF AUSTIN

CITY OF AUSTIN
WILD HORSE RANCH WWTP EXPANSION
DEMOLITION
EXISTING SECONDARY CLARIFIER DEMOLITION DETAILS

VERIFY SCALES
BAR IS ONE INCH ON ORIGINAL DRAWING
0 1"
IF NOT ONE INCH ON THIS SHEET, ADJUST SCALES ACCORDINGLY

JOB NO. 10976A.10
DRAWING NO. 40D02
SHEET NO. 139 OF 464

LAST SAVED BY: dsevert

E:\122094-Northeast\000B-Wildhorse Plant Design\RECORD-DWGS\VOLUME 2 OF 3\1EM-4.dwg ; March 14, 2007 ; 4:13pm

PROJECT NO. 9585A10 FILE NAME: 9585A10_SheetSeed.dgn

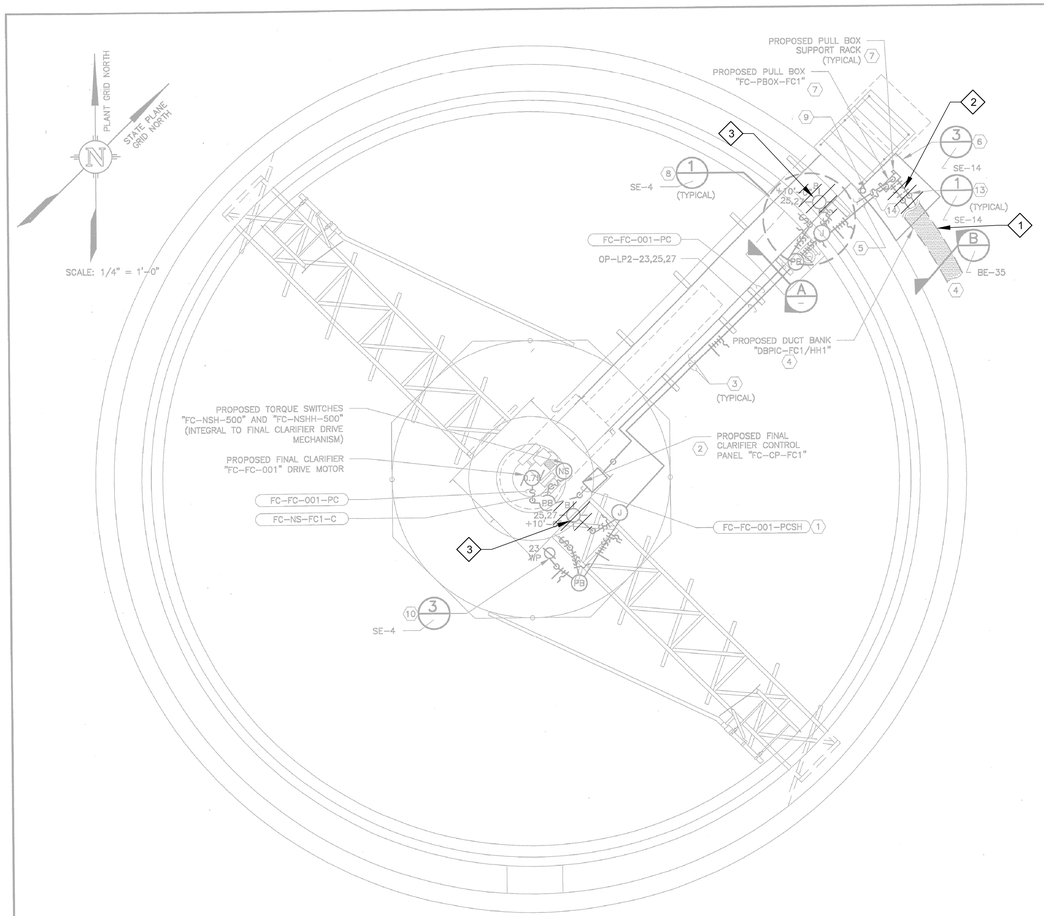

KEY NOTES:

1. PROPOSED CONDUIT/WIRE ROUTES UNDERNEATH PROPOSED CLARIFIER PLATFORM AND CONNECTS TO CLARIFIER DRIVE. CUT NOTCH THROUGH FINAL CLARIFIER ACCESS BRIDGE FLOOR GRATING TO ACCOMMODATE PROPOSED CONDUIT/WIRE PENETRATION. CLOSELY AND CAREFULLY COORDINATE CONNECTION LOCATION WITH CLARIFIER MANUFACTURER AND MAKE ALL FINAL CONNECTIONS. SUPPORT CONDUIT/WIRE USING SINGLE CONDUIT SUPPORT CHANNEL SECURED TO CLARIFIER ACCESS BRIDGE WITH SPACING BETWEEN ADJACENT SUPPORT CHANNELS TO NOT EXCEED SIX FEET, SIMILAR TO DETAILS ON DRAWING NO. SE-7.
2. FURNISH AND INSTALL THE FINAL CLARIFIER CONTROL PANEL TO ACCESS BRIDGE HANDRAIL PER THE MANUFACTURER'S DIAGRAMS AND RECOMMENDATIONS. FURNISH AND INSTALL ALL NECESSARY CONDUIT/WIRE AND MAKE ALL FINAL CONNECTIONS BETWEEN THE FINAL CLARIFIER CONTROL PANEL AND THE FINAL CLARIFIER DRIVE ASSEMBLY SUB-COMPONENTS PER THE MANUFACTURER'S WIRING DIAGRAMS AND RECOMMENDATIONS.
3. PROPOSED CONDUIT/WIRE ROUTES ALONG ACCESS BRIDGE, SPACE ADJACENT CONDUIT/WIRE SUPPORTS NO GREATER THAN 6'-0" APART. NOT ALL REQUIRED CONDUIT/WIRE SUPPORTS ARE SHOWN FOR CLARITY. PORTIONS OF THE PROPOSED CONDUIT/WIRE ARE FURNISHED AND INSTALLED BY THE CLARIFIER MANUFACTURER. CLOSELY AND CAREFULLY COORDINATE ALL CONDUIT/WIRE SUPPORTS WITH CLARIFIER MANUFACTURER AND MAKE ALL FINAL CONNECTIONS.
4. SPACE AND ENCASE IN SAND PER THE DETAILS SHOWN ON DRAWING NO. SE-8. PROPOSED DUCT BANK CONTINUES. REFER TO ELECTRICAL SITE PLAN DRAWING NO. BE-32 FOR ADDITIONAL INFORMATION.
5. PROPOSED CONDUIT/WIRE ROUTES VERTICALLY STACKED TO CONNECT TO PROPOSED PULL BOX.
6. FURNISH AND INSTALL REINFORCED CONCRETE OUTDOOR EQUIPMENT PAD PER THE DETAILS ON DRAWING NO. SE-14.
7. FURNISH AND INSTALL PROPOSED PULLBOX ON RACK PER THE DETAILS ON DRAWING NO. SE-14. NOT ALL RACK COMPONENTS ARE SHOWN HERE FOR CLARITY. PROPOSED PULLBOX IS MINIMALLY SIZED 18" WIDTH X 12" HEIGHT X 8" DEEP.
8. FURNISH AND INSTALL PROPOSED LIGHT FIXTURE, LIGHT SWITCH, INTERCONNECT CONDUIT/WIRE, PULLBOX, AND CORRESPONDING JUNCTION BOXES PER THE DETAILS ON DRAWING NO. SE-4 AND MAKE ALL FINAL CONNECTIONS. CLOSELY AND CAREFULLY COORDINATE LIGHT FIXTURE REQUIREMENTS WITH THE FINAL CLARIFIER MANUFACTURER.
9. PROPOSED GROUNDING CONDUCTOR RISES/DESCENDS TO CONNECT TO PROPOSED FINAL CLARIFIER ACCESS BRIDGE. REFER TO THE SITE GROUNDING DRAWING, BL-31 , KEYNOTE NINE, FOR ADDITIONAL INFORMATION.
10. FURNISH AND INSTALL CONVENIENCE RECEPTACLE TO FINAL CLARIFIER ACCESS BRIDGE STRUCTURE PER THE DETAILS ON DRAWING NO. SE-4.
11. PROPOSED FINAL CLARIFIER CONDUIT/WIRE SUPPORT RACK FURNISHED AND INSTALLED BY THE FINAL CLARIFIER MANUFACTURER. THE PROPOSED CONDUIT/WIRE SUPPORT RACK IS ATTACHED TO FINAL CLARIFIER ACCESS BRIDGE FURNISHED AND INSTALLED BY THE FINAL CLARIFIER MANUFACTURER. CLOSELY AND CAREFULLY COORDINATE LOCATIONS OF THE CONDUIT/WIRE SUPPORT RACK WITH THE FINAL CLARIFIER MANUFACTURER. THE SPACING BETWEEN ADJACENT CONDUIT/WIRE SUPPORT RACKS SHALL NOT EXCEED SIX FEET.
12. FURNISH AND INSTALL SINGLE CONDUIT SUPPORT CHANNEL TO ATTACH PROPOSED CONDUIT/WIRE TO CONDUIT/WIRE SUPPORT RACK FURNISHED AND INSTALLED BY THE FINAL CLARIFIER MANUFACTURER AND MAKE ALL FINAL CONNECTIONS. ATTACH THE PROPOSED SINGLE CONDUIT SUPPORT CHANNEL WITH STAINLESS STEEL FASTENERS.
13. LOCATE CONDUIT/WIRE STUB-UP IMMEDIATELY ADJACENT TO PROPOSED EQUIPMENT. PROPOSED CONDUIT/WIRE STUB-UP IS SHOWN AWAY FROM THE EQUIPMENT FOR CLARITY. PERFORM CONDUIT/WIRE STUB-UP PER THE DETAILS ON DRAWING NO. SE-14.
14. FURNISH AND INSTALL LIQUID-TIGHT FLEXIBLE CONDUIT TO INTERCONNECT SURFACE MOUNTED CONDUIT/WIRE (MOUNTED TO FINAL CLARIFIER STRUCTURE) WITH PROPOSED PULLBOX. REFER TO SPECIFICATIONS FOR LENGTH AND ADDITIONAL INFORMATION.

GENERAL NOTES:

1. LOCATIONS/SIZES OF ELECTRICAL EQUIPMENT SHOWN ARE APPROXIMATE. CONTRACTOR SHALL FIELD VERIFY ACTUAL CONDITIONS PRIOR TO COMMENCING CONSTRUCTION.
2. SUPPORT/RACK EXPOSED CONDUIT SYSTEMS PER DETAILS ON DRAWING NO. SE-7.
3. NOT ALL EQUIPMENT IS SHOWN, FOR CLARITY.
4. EXACT LOCATIONS OF MECHANICAL/STRUCTURAL/CIVIL COMPONENTS ARE NOT SHOWN ON THIS DRAWING. REFER TO MECHANICAL/STRUCTURAL/CIVIL DRAWINGS FOR EXACT LOCATIONS OF MECHANICAL/STRUCTURAL/CIVIL ITEMS.
5. CONTRACTOR SHALL SIZE ALL PULLBOXES PER, AND IN ACCORDANCE WITH, THE REQUIREMENTS OF THE NATIONAL ELECTRICAL CODE (N.E.C.).
6. EXTREME CARE MUST BE TAKEN FOR THE INSTALLATION OF THE ELECTRICAL DUCT BANKS SINCE THERE ARE NO AVAILABLE AS BUILT RECORDS OF PROFILES IDENTIFYING THE LOCATION AND INVERT ELEVATIONS OF EXISTING UNDERGROUND ELECTRICAL SYSTEM AND UNDERGROUND MECHANICAL PIPING. ROUTING OF NEW DUCT BANK SHOWN IS BASED ON SCHEMATIC KNOWLEDGE OF THE SIZE OF MECHANICAL PIPING AND THEIR APPROXIMATE SIZE AND/OR LOCATION. NO DATA IS AVAILABLE PERTAINING TO EXISTING UNDERGROUND ELECTRICAL DUCT BANK SYSTEM AND ITS COORDINATION WITH THE UNDERGROUND MECHANICAL SYSTEM. THEREFORE THE CONTRACTOR IS TO EXERCISE EXTREME CARE, VERIFY LOCATION/ROUTING/ELEVATION OF EXISTING UNDERGROUND UTILITIES PRIOR TO COMMENCING FULL SCALE INSTALLATION PROCESS OF THE PROPOSED DUCT BANK SYSTEM. FOLLOWING THE DISCOVERY VERIFICATION OF EXISTING UNDERGROUND UTILITIES, SHOULD ADJUSTMENT/MODIFICATIONS BECOME A NECESSITY TO EITHER THE EXISTING OR PROPOSED SYSTEM (AS APPLICABLE), THE EXISTING DISCOVERED FIELD CONDITIONS MUST BE BROUGHT TO THE ENGINEERS ATTENTION FOR EXECUTION OF THE NECESSARY ADJUSTMENTS/MODIFICATIONS.
7. CONTRACTOR SHALL CLOSELY AND CAREFULLY COORDINATE ROUTE OF PROPOSED CONDUIT/WIRE WITH EXISTING AND PROPOSED CIVIL/MECHANICAL/STRUCTURAL/ELECTRICAL SYSTEMS/COMPONENTS/EQUIPMENT/UTILITIES, ETC.
8. PORTIONS OF THE PROPOSED CONDUIT/WIRE RACKING ALONG THE CLARIFIER BRIDGE IS FURNISHED AND INSTALLED BY THE CLARIFIER MANUFACTURER. CONTRACTOR SHALL CLOSELY AND CAREFULLY COORDINATE THE LOCATION/QUANTITY/SIZE OF THE CONDUIT/WIRE SUPPORTS FURNISHED AND INSTALLED BY THE CLARIFIER MANUFACTURER TO INSURE SECURE INSTALLATION AND COMPLIANCE/ADHERENCE TO THE REQUIREMENTS OF THE NATIONAL ELECTRICAL CODE (N.E.C.) AND ALL APPLICABLE LOCAL STANDARDS/REQUIREMENTS.

REFERENCE DRAWINGS:

BE-31 – ELECTRICAL SITE PLAN
RE-33 – RE-34 – CONDUIT/WIRE SCHEDULE
RE-35 – RE-38 – PANEL SCHEDULES
SE-1 – LIGHTING FIXTURE SCHEDULE

RECORD DRAWING
THIS CONSTRUCTION DOCUMENT WAS PREPARED USING INFORMATION SUPPLIED BY THE CONTRACTOR TO REPRESENT CONSTRUCTION CHANGES. THIS DOCUMENT IS FOR INFORMATION AND REFERENCE IN CONNECTION WITH THE OWNER'S USE AND OCCUPANCY OF THE PROJECT AND IS NOT INTENDED FOR BID, PERMIT OR CONSTRUCTION.
BY: K. A. Harutunian DATE: 1/5/2007

REUSE OF DOCUMENTS
This document and the ideas and designs incorporated herein as an instrument of professional service has been developed, designed and prepared by Harutunian Engineering, Inc. and is not to be used, in whole or part, for any other project without the written authorization of the City of Austin and Harutunian Engineering, Inc. © 2003

HARUTUNIAN ENGINEERING INCORPORATED
ENGINEERING AND ENVIRONMENTAL CONSULTANTS
305 EAST HIGHLAND DRIVE SUITE 500 AUSTIN, TEXAS 78752

NO.	DATE	REVISION	APPROV.
4			
3			
2			
1			

WARNING
0 1/2 1
IF THIS BAR DOES NOT MEASURE 1" THEN DRAWING IS NOT TO SCALE

K. A. HARUTUNIAN 59181 REGISTERED PROFESSIONAL ENGINEER
10/18/2003

CITY OF AUSTIN, TEXAS
NORTHEAST INTERIM WASTEWATER TREATMENT PLANT
FINAL CLARIFIER NO. 1 POWER, I&C, LIGHTING, AND AUXILIARY SYSTEMS PLAN
Turner Collie & Braden Inc.
ENGINEERS • PLANNERS • PROJECT MANAGERS

Unit: PUBLIC WORKS	Scale: AS NOTED	Date: OCTOBER 2003	
Designed: HEI	Checked: HEI	Job No.: 052-122094-0008	
Drawn: HEI	Approved: HEI	Sheet: 128/327	
Dwg. No.: EE-1			

THIS CONFORMED DOCUMENT IS RELEASED FOR THE CONVENIENCE OF THE CONTRACTOR UNDER THE AUTHORITY OF:

K. A. Harutunian — 11-01-22
K. A. HARUTUNIAN, P.E. — DATE
TX LIC NO. 59181

SEE DISCLAIMER FOR LIMITATIONS OF USE.

CONTRACT DOCUMENTS DATED FEBRUARY 28, 2022, AS PART OF THE BIDDING DOCUMENTS (DRAWINGS AND SPECIFICATIONS) AND SUBSEQUENTLY ISSUED ADDENDA HAVE BEEN MERGED INTO ONE CONFORMING SET OF DOCUMENTS FOR THE CONVENIENCE OF THE CONTRACTOR. IF INCONSISTENCIES OR AMBIGUITIES BETWEEN "CONFORMED" DOCUMENTS AND CONTRACT DOCUMENTS ARE FOUND, THE CONTRACT DOCUMENTS SHALL GOVERN.

This document, and the designs incorporated herein, is an instrument of professional service that has been developed, designed and prepared by Harutunian Engineering, Inc., and is not to be used, in whole or in part, for any other project without giving written notice to Harutunian Engineering, Inc.

REV	DATE	BY	DESCRIPTION
			CONFORMED DOCUMENTS

DESIGNED HEI
DRAWN HEI
CHECKED HEI
DATE NOVEMBER 2022

** ORIGINAL SEALED BY K.A. HARUTUNIAN 02-28-22 TX PE 59181 **

HARUTUNIAN ENGINEERING INCORPORATED
ENGINEERING AND ENVIRONMENTAL CONSULTANTS
8100 CROSS PARK DRIVE AUSTIN, TEXAS 78754 TBPE REGISTRATION NO. F-2408

carollo® TBPELS No. F-882

CITY OF AUSTIN — FOUNDED 1839

CITY OF AUSTIN

CITY OF AUSTIN
WILD HORSE RANCH WWTP EXPANSION
DEMOLITION
FINAL CLARIFIER NO. 1
POWER, AUXILIARY, AND I&C PLAN - DEMOLITION

VERIFY SCALES
BAR IS ONE INCH ON ORIGINAL DRAWING
0 1"
IF NOT ONE INCH ON THIS SHEET, ADJUST SCALES ACCORDINGLY

JOB NO. 10976A.00
DRAWING NO. 40DE01
SHEET NO. 140 OF 464

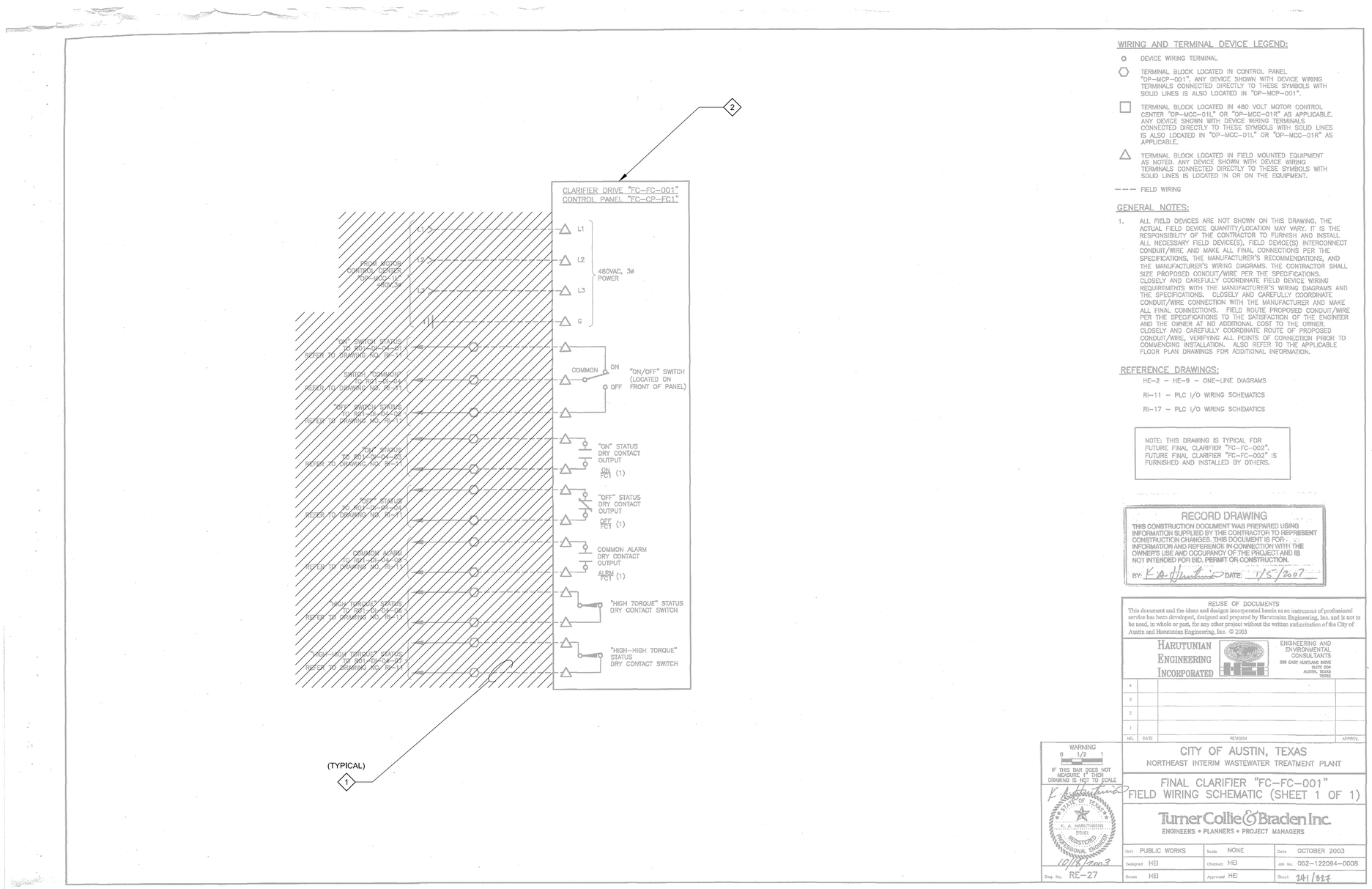

KEY NOTES

1. DISCONNECT AND REMOVE ASSOCIATED CONTROL PANEL FIELD WIRING IN ITS ENTIRETY. REFER TO PLAN DRAWINGS FOR ADDITIONAL INFORMATION.
2. EXISTING CONTROL PANEL AND ASSOCIATED SUB-COMPONENTS SHALL REMAIN AND BE REUSED DURING RENOVATION ACTIVITIES.

WIRING AND TERMINAL DEVICE LEGEND:

- DEVICE WIRING TERMINAL
- TERMINAL BLOCK LOCATED IN CONTROL PANEL "OP-MCP-001". ANY DEVICE SHOWN WITH DEVICE WIRING TERMINALS CONNECTED DIRECTLY TO THESE SYMBOLS WITH SOLID LINES IS ALSO LOCATED IN "OP-MCP-001".
- TERMINAL BLOCK LOCATED IN 480 VOLT MOTOR CONTROL CENTER "OP-MCC-01L" OR "OP-MCC-01R" AS APPLICABLE. ANY DEVICE SHOWN WITH DEVICE WIRING TERMINALS CONNECTED DIRECTLY TO THESE SYMBOLS WITH SOLID LINES IS ALSO LOCATED IN "OP-MCC-01L" OR "OP-MCC-01R" AS APPLICABLE.
- TERMINAL BLOCK LOCATED IN FIELD MOUNTED EQUIPMENT AS NOTED. ANY DEVICE SHOWN WITH DEVICE WIRING TERMINALS CONNECTED DIRECTLY TO THESE SYMBOLS WITH SOLID LINES IS LOCATED IN OR ON THE EQUIPMENT.
- — — FIELD WIRING

GENERAL NOTES:

1. ALL FIELD DEVICES ARE NOT SHOWN ON THIS DRAWING. THE ACTUAL FIELD DEVICE QUANTITY/LOCATION MAY VARY. IT IS THE RESPONSIBILITY OF THE CONTRACTOR TO FURNISH AND INSTALL ALL NECESSARY FIELD DEVICE(S), FIELD DEVICE(S) INTERCONNECT CONDUIT/WIRE AND MAKE ALL FINAL CONNECTIONS PER THE SPECIFICATIONS, THE MANUFACTURER'S RECOMMENDATIONS, AND THE MANUFACTURER'S WIRING DIAGRAMS. THE CONTRACTOR SHALL SIZE PROPOSED CONDUIT/WIRE PER THE SPECIFICATIONS. CLOSELY AND CAREFULLY COORDINATE FIELD DEVICE WIRING REQUIREMENTS WITH THE MANUFACTURER'S WIRING DIAGRAMS AND THE SPECIFICATIONS. CLOSELY AND CAREFULLY COORDINATE CONDUIT/WIRE CONNECTION WITH THE MANUFACTURER AND MAKE ALL FINAL CONNECTIONS. FIELD ROUTE PROPOSED CONDUIT/WIRE PER THE SPECIFICATIONS TO THE SATISFACTION OF THE ENGINEER AND THE OWNER AT NO ADDITIONAL COST TO THE OWNER. CLOSELY AND CAREFULLY COORDINATE ROUTE OF PROPOSED CONDUIT/WIRE, VERIFYING ALL POINTS OF CONNECTION PRIOR TO COMMENCING INSTALLATION. ALSO REFER TO THE APPLICABLE FLOOR PLAN DRAWINGS FOR ADDITIONAL INFORMATION.

REFERENCE DRAWINGS:

HE-2 – HE-9 – ONE-LINE DIAGRAMS

RI-11 – PLC I/O WIRING SCHEMATICS

RI-17 – PLC I/O WIRING SCHEMATICS

NOTE: THIS DRAWING IS TYPICAL FOR FUTURE FINAL CLARIFIER "FC-FC-002". FUTURE FINAL CLARIFIER "FC-FC-002" IS FURNISHED AND INSTALLED BY OTHERS.

RECORD DRAWING
THIS CONSTRUCTION DOCUMENT WAS PREPARED USING INFORMATION SUPPLIED BY THE CONTRACTOR TO REPRESENT CONSTRUCTION CHANGES. THIS DOCUMENT IS FOR INFORMATION AND REFERENCE IN CONNECTION WITH THE OWNER'S USE AND OCCUPANCY OF THE PROJECT AND IS NOT INTENDED FOR BID, PERMIT OR CONSTRUCTION.
BY: K.A. Hartunian DATE: 1/5/2007

REUSE OF DOCUMENTS
This document and the ideas and designs incorporated herein as an instrument of professional service has been developed, designed and prepared by Harutunian Engineering, Inc. and is not to be used, in whole or part, for any other project without the written authorization of the City of Austin and Harutunian Engineering, Inc. © 2003

HARUTUNIAN ENGINEERING INCORPORATED
ENGINEERING AND ENVIRONMENTAL CONSULTANTS
309 EAST HUNTLAND DRIVE SUITE 550 AUSTIN, TEXAS 78752

NO.	DATE	REVISION	APPROV.
4			
3			
2			
1			

WARNING 0 1/2 1 IF THIS BAR DOES NOT MEASURE 1" THEN DRAWING IS NOT TO SCALE

STATE OF TEXAS K. A. HARUTUNIAN 59181 REGISTERED PROFESSIONAL ENGINEER 10/13/2003

CITY OF AUSTIN, TEXAS
NORTHEAST INTERIM WASTEWATER TREATMENT PLANT
FINAL CLARIFIER "FC-FC-001"
FIELD WIRING SCHEMATIC (SHEET 1 OF 1)
Turner Collie & Braden Inc.
ENGINEERS • PLANNERS • PROJECT MANAGERS

Unit PUBLIC WORKS	Scale NONE	Date OCTOBER 2003	
Designed HEI	Checked HEI	Job No. 052-122094-0008	
Drawn HEI	Approved HEI	Sheet 241/327	
Dwg. No. RE-27			

THIS CONFORMED DOCUMENT IS RELEASED FOR THE CONVENIENCE OF THE CONTRACTOR UNDER THE AUTHORITY OF:

K. A. HARUTUNIAN, P.E. — 11-01-22 DATE
TX LIC NO. 59181

SEE DISCLAIMER FOR LIMITATIONS OF USE.

CONTRACT DOCUMENTS DATED FEBRUARY 28, 2022, AS PART OF THE BIDDING DOCUMENTS (DRAWINGS AND SPECIFICATIONS) AND SUBSEQUENTLY ISSUED ADDENDA HAVE BEEN MERGED INTO ONE CONFORMING SET OF DOCUMENTS FOR THE CONVENIENCE OF THE CONTRACTOR. IF INCONSISTENCIES OR AMBIGUITIES BETWEEN "CONFORMED" DOCUMENTS AND CONTRACT DOCUMENTS ARE FOUND, THE CONTRACT DOCUMENTS SHALL GOVERN.

This document, and the designs incorporated herein, is an instrument of professional service that has been developed, designed and prepared by Harutunian Engineering, Inc., and is not to be used, in whole or in part, for any other project without giving written notice to Harutunian Engineering, Inc.

CONFORMED DOCUMENTS

REV	DATE	BY	DESCRIPTION

DESIGNED HEI
DRAWN HEI
CHECKED HEI
DATE NOVEMBER 2022

** ORIGINAL SEALED BY K.A. HARUTUNIAN 02-28-22 TX PE 59181 **

HARUTUNIAN ENGINEERING INCORPORATED
ENGINEERING AND ENVIRONMENTAL CONSULTANTS
8100 CROSS PARK DRIVE AUSTIN, TEXAS 78754
TBPE REGISTRATION NO. F-2408

carollo TBPELS No. F-882

CITY OF AUSTIN FOUNDED 1839 CITY OF AUSTIN

CITY OF AUSTIN
WILD HORSE RANCH WWTP EXPANSION
DEMOLITION
FINAL CLARIFIER NO. 1
FIELD INTERFACE WIRING SCHEMATIC - DEMOLITION

VERIFY SCALES
BAR IS ONE INCH ON ORIGINAL DRAWING
0 1"
IF NOT ONE INCH ON THIS SHEET, ADJUST SCALES ACCORDINGLY

JOB NO. 10976A.00
DRAWING NO. 40DN01
SHEET NO. 141 OF 464

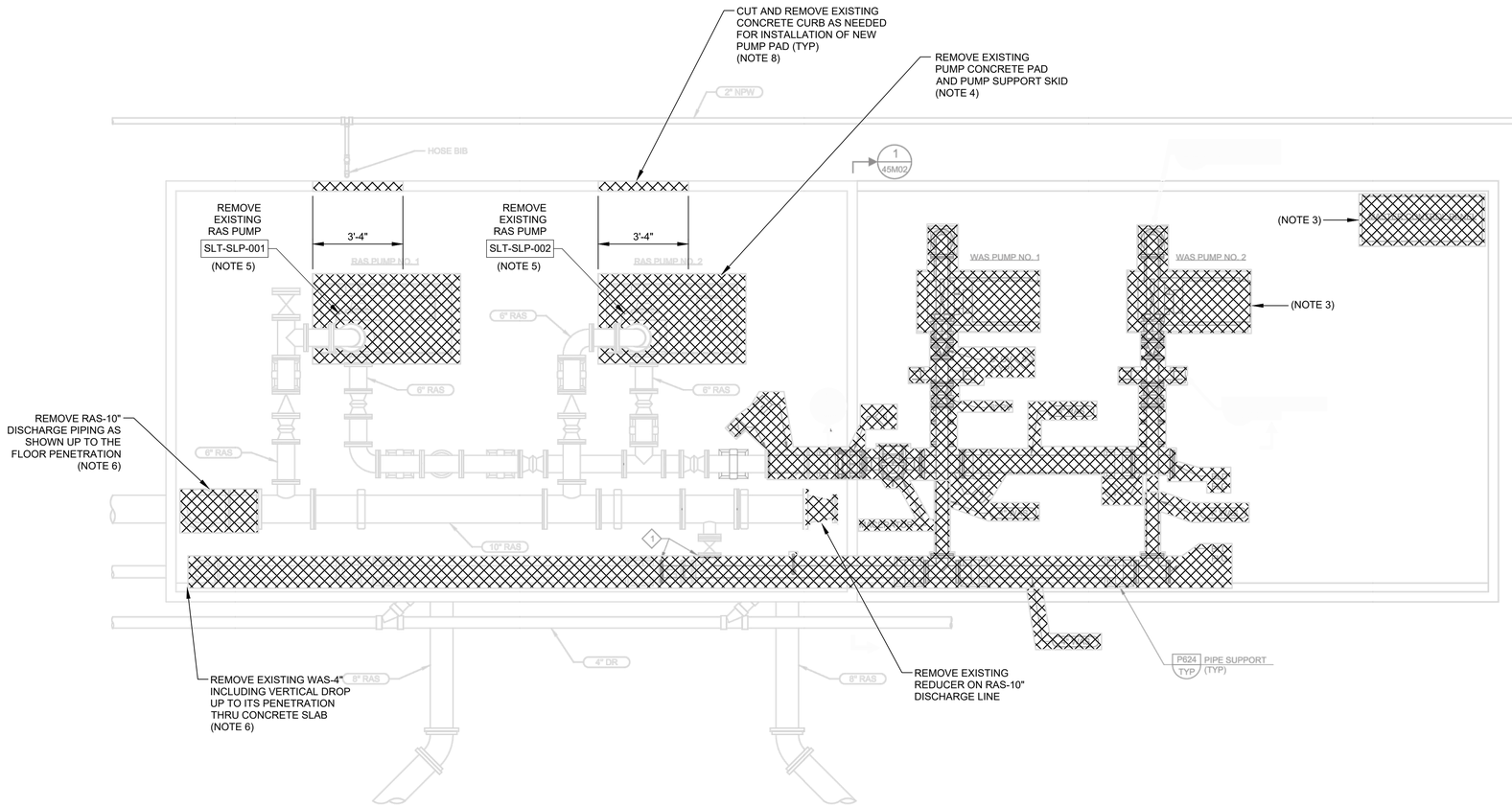

A PLAN
SCALE: 1/2" = 1'-0"
FILE: 10976A0045M101

GENERAL NOTES:

1. EXISTING RAS/WAS PUMP STATION SHALL REMAIN IN SERVICE DURING THE CONSTRUCTION OF THE ADDITIONAL PUMPS AND PIPING. PROTECT ALL EXISTING FACILITIES IN PLACE NOT SHOWN TO BE DEMOLISHED.
2. CONTRACTOR SHALL FIELD VERIFY THE LOCATION OF ALL BURIED UTILITIES PRIOR TO ANY EXCAVATION ACTIVITIES.
3. TEMPORARY EROSION AND SEDIMENTATION CONTROLS SHALL BE INSTALLED AROUND THE CONSTRUCTION AREA PRIOR TO BEGINNING ANY EXCAVATION WORK.
4. PIPES SHALL BE IN CONFORMANCE WITH THE LATEST VERSION OF THE CITY OF AUSTIN STANDARD TECHNICAL SPECIFICATIONS 510.
5. VALVES SHALL BE IN CONFORMANCE WITH THE LATEST VERSION OF THE CITY OF AUSTIN STANDARD TECHNICAL SPECIFICATION 511S.
6. ALL PIPING, VALVES, AND SUPPORTS SHALL BE COATED WITH A HIGH SOLIDS EPOXY AND POLYURETHANE COATING SYSTEM AFTER INSTALLATION. HIGH SOLIDS EPOXY (SELF PRIMING) SHALL HAVE NOT LESS THAN 72 PERCENT SOLIDS BY VOLUME. (TNEMEC HS EPOXY SERIES 104 OR EQUAL) ALIPHATIC OR ALIPHATIC-ACRYLIC POLYURETHANE. (TNEMEC ENDURA-SHIELD II SERIES 1075) 3 COAT SYSTEM - HIGH SOLIDS EPOXY PRIMER 4 TO 5 MILS DRY FILM THICKNESS, HIGH SOLIDS EPOXY INTERMEDIATE COAT 4 TO 5 MILS, POLYURETHANE 2.5 TO 3.5 MILS. APPLY PER THE MANUFACTURER'S INSTRUCTIONS. COLOR SHALL BE SELECTED BY THE OWNER.
7. SELF-ADHESIVE PIPE LABELS SUITABLE FOR EXTERIOR USE AS MANUFACTURED BY SETON OR EQUAL SHALL BE INSTALLED ON ALL PIPES. LABEL SPACING SHALL NOT EXCEED 20 FT AND SHALL BE VISIBLE FROM BOTH SIDES OF THE PIPE. WORDING AND COLOR CODING SHALL BE SELECTED BY THE OWNER.
8. UPON COMPLETION OF THE SITE CONSTRUCTION, FINAL SITE GRADING, AND REVEGETATION OF THE PROJECT SITE SHALL BE PERFORMED, ALL DEBRIS AND CONSTRUCTION MATERIALS SHALL BE REMOVED FROM THE SITE AND FINAL INSPECTION WILL BE CONDUCTED BY THE ENGINEER AND THE CITY OF AUSTIN.

KEY NOTES:

1 REMOVE ELBOW AND MOTORIZED VALVE. CONNECT NEW PIPING TO REMAINING PIPE FLANGE. INSTALL BLIND FLANGE ON REMAINING VALVE FLANGE.
2 REMOVE BULLHEAD TEE WITH BLIND FLANGE AND INSTALL BLIND FLANGE ON VERTICAL PIPE.
3 CONNECT NEW PIPING TO EXISTING PIPE FLANGE.
4 6"x6"x4" REDUCING TEE
5 RUBBER FLAPPER STYLE CHECK VALVE SHALL BE VALMATIC SWINGFLEX OR EQUAL.
6 EBAA IRON MEGAFLANGES OR EQUAL

ABBREVIATIONS

DR	DRAIN
RAS	RETURNED ACTIVATED SLUDGE
WAS	WASTE ACTIVATED SLUDGE
TYP	TYPICAL
PV	PLUG VALVE
CV	CHECK VALVE

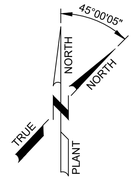

LEGEND

ITEMS TO BE DEMOLISHED

NOTES:

1. THIS IS A RECORD DRAWING FROM A PREVIOUS CONTRACT. ACTUAL FIELD CONDITIONS MAY BE DIFFERENT FROM THOSE SHOWN ON THIS DRAWING. CONTRACTOR TO FIELD VERIFY INSTALLED CONDITIONS IMPACTED BY OR IMPACTING THIS WORK PRIOR TO INITIATING THE WORK. CONTRACTOR SHALL REFER TO CONSTRUCTION DOCUMENTS FOR RESPONSIBILITIES RELATIVE TO VERIFICATION OF EXISTING FACILITIES AND COORDINATION WITH PLANT OPERATION.
2. CONTRACTOR SHALL REFER TO SPECIFICATION 01140 - WORK RESTRICTIONS FOR SHUTDOWN REQUIREMENTS AND SEQUENCING OF DEMOLITION IN ORDER TO ALLOW THE PLANT TO REMAIN IN SERVICE DURING CONSTRUCTION.
3. REMOVE EXISTING WAS PUMPS 1 AND 2, MACERATOR, ALL ASSOCIATED PIPING AND VALVES UP TO THE LIMITS SHOWN, AND THE MASTER CONTROL PANEL ASSOCIATED WITH WAS PUMPS. SALVAGE AND SAVE WAS PUMPS, MASTER CONTROL PANEL, MACERATOR AND VALVES FOR USE AT THE NEW WAS PUMP STATION LOCATION, SHOWN ON SHEET 47M01.
4. REMOVE EXISTING CONCRETE PAD. CUT EXISTING VERTICAL REBARS 1" BELOW FINISHED FLOOR. CHIP CONCRETE BELOW EXISTING PADS AND RESURFACE BY INSTALLING 1" OF NON-SHRINK GROUT.
5. RAS PUMPS TO BE REMOVED AND REPLACED WITH NEW PUMPS. SUPPORT PIPING IN PLACE WHILE THE PUMPING UNIT IS REMOVED TO AVOID TRANSFERRING STRESS TO EXISTING VALVES AND COUPLINGS.
6. CUT EXISTING 10" RAS AND 4" WAS LINES FLUSH WITH CONCRETE SLAB. PLUG AND FILL THE ABANDONED SEGMENT OF EXISTING PIPING WITH CONTROLLED LOW STRENGTH MATERIAL. REFER TO YARD PIPING DEMOLITION SHEETS FOR EXTENT OF 10" RAS AND 4" WAS DEMOLITION IN THE YARD.
7. REMOVE ALL DEMOLITION MATERIALS AND DISPOSE OF THEM IN AN APPROVED MANNER, IN ACCORDANCE WITH CONTRACT DOCUMENTS.
8. COORDINATE THE EXTENT OF CURB TO BE REMOVED WITH THE NEW PUMP PAD AS SHOWN ON 45M01.

THIS CONFORMED DOCUMENT IS RELEASED FOR THE CONVENIENCE OF THE CONTRACTOR UNDER THE AUTHORITY OF:

CASEY G. WAUTERS, P.E. — 11-01-22
TX LIC NO. 93889 — DATE

SEE DISCLAIMER FOR LIMITATIONS OF USE.

CONTRACT DOCUMENTS DATED JUNE 10, 2022, AS PART OF THE BIDDING DOCUMENTS (DRAWINGS AND SPECIFICATIONS) AND SUBSEQUENTLY ISSUED ADDENDA HAVE BEEN MERGED INTO ONE CONFORMING SET OF DOCUMENTS FOR THE CONVENIENCE OF THE CONTRACTOR. IF INCONSISTENCIES OR AMBIGUITIES BETWEEN "CONFORMED" DOCUMENTS AND CONTRACT DOCUMENTS ARE FOUND, THE CONTRACT DOCUMENTS SHALL GOVERN.

REV	DATE	BY	DESCRIPTION

DESIGNED LHA
DRAWN LGD
CHECKED
DATE JUNE 2019

STATE OF TEXAS — LEONARD H. ALLEN JR. — 111050 — LICENSED PROFESSIONAL ENGINEER

Digitally signed by Leonard H. Allen
Carollo Engineers, Inc.
Date: 2019.06.20

carollo
TBPE No. F-882

CITY OF AUSTIN

CITY OF AUSTIN
WILD HORSE RANCH WWTP
EXPEDITED FACILITY IMPROVEMENTS
MECHANICAL
RAS / WAS PUMP STATION PLAN

VERIFY SCALES
BAR IS ONE INCH ON ORIGINAL DRAWING
0 1"
IF NOT ONE INCH ON THIS SHEET, ADJUST SCALES ACCORDINGLY

JOB NO. 10976A.00
DRAWING NO. 45M01
SHEET NO.
OF

REV	DATE	BY	DESCRIPTION
			CONFORMED DOCUMENTS

DESIGNED BY
DRAWN AW
CHECKED SGE
DATE FEBRUARY 2022

** ORIGINAL SEALED BY CASEY G. WAUTERS, P.E. 2/28/2022 TX PE 93889 **

AECOM TECHNICAL SERVICES INC.
13640 BRIARWICK DRIVE, SUITE 200
AUSTIN, TEXAS 78729
WWW.AECOM.COM
TBPE REG. NO. F-3580

carollo
TBPE No. F-882

CITY OF AUSTIN

CITY OF AUSTIN
WILD HORSE RANCH WWTP EXPANSION
DEMOLITION
EXISTING RAS PUMP STATION No. 1 DEMOLITION PLAN

VERIFY SCALES
BAR IS ONE INCH ON ORIGINAL DRAWING
0 1"
IF NOT ONE INCH ON THIS SHEET, ADJUST SCALES ACCORDINGLY

JOB NO. 10976A.10
DRAWING NO. 45D01
SHEET NO. 142 OF 464

PROJECT NO. 9585A10 FILE NAME: 9585A10_SheetSeed.dgn

Plot Date: 20-JUN-2019 2:06:50 PM
User: LDietzel
Model: Layout1 ColorTable: gshade.ctb DesignScript: Carollo_Std_Pen_v0905.pen PlotScale: 2:1
LAST SAVED BY: ldietzel
LAST SAVED BY: dsievert

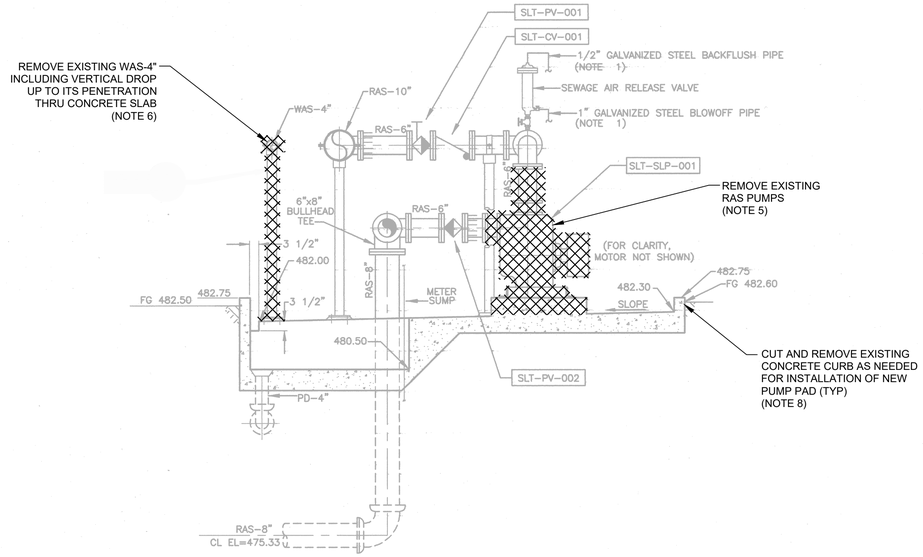

SECTION A / SCALE : 1/2" = 1'-0" / EM-8

SECTION CUTS SHOWN ON THIS DRAWING REFERENCES THE MECHANICAL PLAN FROM A PRIOR CONTRACT. SECTION A IS CUT IN NORTH TO SOUTH DIRECTION, FACING WEST, AND SHOWS EXISTING RAS PUMPS.

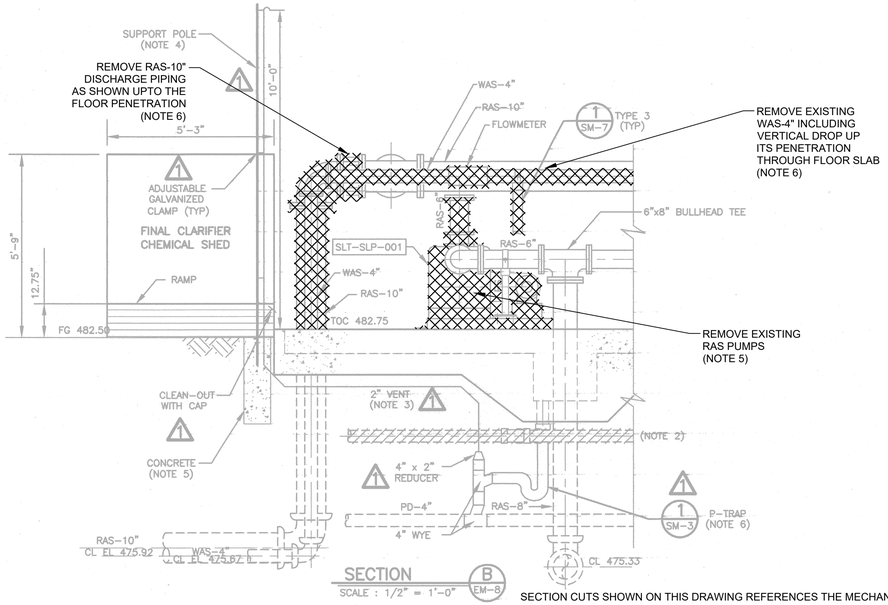

SECTION B / SCALE : 1/2" = 1'-0" / EM-8

SECTION CUTS SHOWN ON THIS DRAWING REFERENCES THE MECHANICAL PLAN FROM A PRIOR CONTRACT. SECTION B IS CUT IN EAST TO WEST DIRECTION, FACING NORTH, AND PARTIALLY SHOWS EXISTING RAS PUMP NO. 1, AND SUCTION AND DISCHARGE PIPING,

NOTES:

1. ROUTE PIPE TO SUMP AREA AND ATTACH TO SLAB. VENT AND FLUSH DISCHARGE TO SUMP, WITH BACKFLUSH CONNECTION FOR HOSE.
2. ACTUAL INVERT OF PD-4" IS 477± PER PROFILE 3 ON SHEET BM-106.
3. VENT PIPING TO BE CAST IRON SOIL PIPE IN ACCORDANCE WITH SECTION 15402. TERMINATE 10'-0" ABOVE GRADE WITH GOOSENECK AND 1/4" X 1/4" STAINLESS STEEL INSECT SCREEN.
4. SUPPORT VENT PIPING WITH GALVANIZED STEEL POLE USING ADJUSTABLE GALVANIZED STEEL CLAMPS. POLE HEIGHT TO BE A MINIMUM OF 8 FEET. DIAMETER OF TO BE A MINIMUM OF 3 INCHES.
5. SET SUPPORT POLE IN CLASS A CONCRETE, MINIMUM 12 INCHES DIAMETER AND 36 INCHES DEEP. EXTEND A MINIMUM OF 1 INCH ABOVE GRADE AND MOUND TO SHED WATER.
6. P-TRAPS TO BE PROVIDED AS SHOWN FOR BOTH SUMP DRAINS. VENTS MAY BE COMBINED ABOVE GRADE FOLLOWING CLEANOUTS.

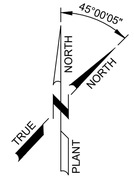

LEGEND

ITEMS TO BE DEMOLISHED

NOTES:

1. THIS IS A RECORD DRAWING FROM A PREVIOUS CONTRACT. ACTUAL FIELD CONDITIONS MAY BE DIFFERENT FROM THOSE SHOWN ON THIS DRAWING. CONTRACTOR TO FIELD VERIFY INSTALLED CONDITIONS IMPACTED BY OR IMPACTING THIS WORK PRIOR TO INITIATING THE WORK. CONTRACTOR SHALL REFER TO CONSTRUCTION DOCUMENTS FOR RESPONSIBILITIES RELATIVE TO VERIFICATION OF EXISTING FACILITIES AND COORDINATION WITH PLANT OPERATION.
2. CONTRACTOR SHALL REFER TO SPECIFICATION 01140 - WORK RESTRICTIONS FOR SHUTDOWN REQUIREMENTS AND SEQUENCING OF DEMOLITION IN ORDER TO ALLOW THE PLANT TO REMAIN IN SERVICE DURING CONSTRUCTION.
3. REMOVE EXISTING WAS PUMPS 1 AND 2, MACERATOR, ALL ASSOCIATED PIPING AND VALVES UP TO THE LIMITS SHOWN, AND THE MASTER CONTROL PANEL ASSOCIATED WITH WAS PUMPS. SALVAGE AND SAVE WAS PUMPS, MASTER CONTROL PANEL, MACERATOR AND VALVES FOR USE AT THE NEW WAS PUMP STATION LOCATION, SHOWN ON SHEET 47M01.
4. REMOVE EXISTING CONCRETE PAD. CUT EXISTING VERTICAL REBARS 1" BELOW FINISHED FLOOR. CHIP CONCRETE BELOW EXISTING PADS AND RESURFACE BY INSTALLING 1" OF NON-SHRINK GROUT.
5. RAS PUMPS TO BE REMOVED AND REPLACED WITH NEW PUMPS. SUPPORT PIPING IN PLACE WHILE THE PUMPING UNIT IS REMOVED TO AVOID TRANSFERRING STRESS TO EXISTING VALVES AND COUPLINGS.
6. CUT EXISTING 10" RAS AND 4" WAS LINES FLUSH WITH CONCRETE SLAB. PLUG AND FILL THE ABANDONED SEGMENT OF EXISTING PIPING WITH CONTROLLED LOW STRENGTH MATERIAL. REFER TO YARD PIPING DEMOLITION SHEETS FOR EXTENT OF 10" RAS AND 4" WAS DEMOLITION IN THE YARD.
7. REMOVE ALL DEMOLITION MATERIALS AND DISPOSE OF THEM IN AN APPROVED MANNER, IN ACCORDANCE WITH CONTRACT DOCUMENTS.
8. COORDINATE THE EXTENT OF CURB TO BE REMOVED WITH THE NEW PUMP PAD AS SHOWN ON 45M01.

RECORD DRAWING

THIS CONSTRUCTION DOCUMENT WAS PREPARED USING INFORMATION SUPPLIED BY THE CONTRACTOR TO REPRESENT CONSTRUCTION CHANGES. THIS DOCUMENT IS FOR INFORMATION AND REFERENCE IN CONNECTION WITH THE OWNER'S USE AND OCCUPANCY OF THE PROJECT AND IS NOT INTENDED FOR BID, PERMIT OR CONSTRUCTION.

BY: _____ DATE: FEBRUARY 15, 2007

THE SEAL APPEARING ON THIS DOCUMENT WAS AUTHORIZED BY CHARLES N. HURST, P.E. 82464 ON OCTOBER 31, 2003

WARNING 0 1/2" IF THIS BAR DOES NOT MEASURE 1" THEN DRAWING IS NOT TO SCALE

STATE OF TEXAS — CHARLES N. HURST — 82464 — REGISTERED PROFESSIONAL ENGINEER

Dwg. No. EM-9

NO.	DATE	REVISION	APP
4			
3			
2			
1	2/09/07	RECORD DRAWING	SJ

CITY OF AUSTIN, TEXAS
NORTHEAST INTERIM WASTEWATER TREATMENT PLANT

RAS PUMP STATION – SECTIONS

Turner Collie & Braden Inc.
ENGINEERS • PLANNERS • PROJECT MANAGERS

Unit PUBLIC WORKS	Scale AS SHOWN	Date AUGUST 2003	
Designed CNH, CW	Checked CNH	Job No. 052-122094-00	
Drawn PW	Approved SGE	Sheet 127/327	

THIS CONFORMED DOCUMENT IS RELEASED FOR THE CONVENIENCE OF THE CONTRACTOR UNDER THE AUTHORITY OF:

CASEY G. WAUTERS, P.E. 11-01-22
TX LIC NO. 93889 DATE

SEE DISCLAIMER FOR LIMITATIONS OF USE.

CONTRACT DOCUMENTS DATED JUNE 10, 2022, AS PART OF THE BIDDING DOCUMENTS (DRAWINGS AND SPECIFICATIONS) AND SUBSEQUENTLY ISSUED ADDENDA HAVE BEEN MERGED INTO ONE CONFORMING SET OF DOCUMENTS FOR THE CONVENIENCE OF THE CONTRACTOR. IF INCONSISTENCIES OR AMBIGUITIES BETWEEN "CONFORMED" DOCUMENTS AND CONTRACT DOCUMENTS ARE FOUND, THE CONTRACT DOCUMENTS SHALL GOVERN.

REV	DATE	BY	DESCRIPTION
			CONFORMED DOCUMENTS

DESIGNED BY
DRAWN AW
CHECKED SGE
DATE FEBRUARY 2022

** ORIGINAL SEALED BY CASEY G. WAUTERS, P.E. 2/28/2022 TX PE 93889 **

AECOM TECHNICAL SERVICES INC.
13640 BRIARWICK DRIVE, SUITE 200
AUSTIN, TEXAS 78729
WWW.AECOM.COM
TBPE REG. NO. F-3580

carollo
TBPE No. F-882

CITY OF AUSTIN — FOUNDED 1839

CITY OF AUSTIN

CITY OF AUSTIN
WILD HORSE RANCH WWTP EXPANSION
DEMOLITION
EXISTING RAS PUMP STATION No. 1 DEMOLITION SECTION

VERIFY SCALES
BAR IS ONE INCH ON ORIGINAL DRAWING
0 1"
IF NOT ONE INCH ON THIS SHEET, ADJUST SCALES ACCORDINGLY

JOB NO. 10976A.10
DRAWING NO. 45D02
SHEET NO. 143 OF 464

LAST SAVED BY:

E:\122094--Northeast\0008--Wildhorse Plant Design\RECORD--DWGS\VOLUME 2 OF 3\1EM-9.dwg ; March 15, 2007 ; 10:58am

PROJECT NO. 9585A10 FILE NAME: 9585A10_SheetSeed.dgn

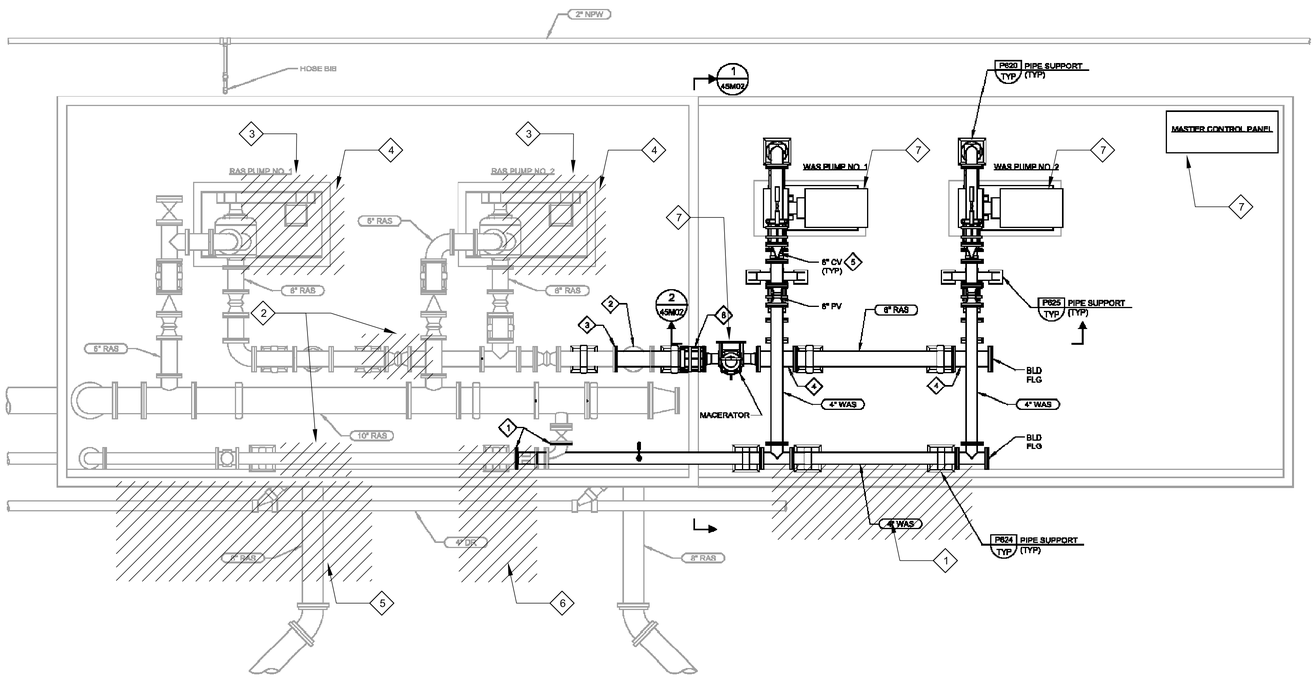

A PLAN
SCALE: 1/2" = 1'-0"
FILE: 10976A0045M101

GENERAL NOTES:

1. EXISTING RAS/WAS PUMP STATION SHALL REMAIN IN SERVICE DURING THE CONSTRUCTION OF THE ADDITIONAL PUMPS AND PIPING. PROTECT ALL EXISTING FACILITIES IN PLACE NOT SHOWN TO BE DEMOLISHED.
2. CONTRACTOR SHALL FIELD VERIFY THE LOCATION OF ALL BURIED UTILITIES PRIOR TO ANY EXCAVATION ACTIVITIES.
3. TEMPORARY EROSION AND SEDIMENTATION CONTROLS SHALL BE INSTALLED AROUND THE CONSTRUCTION AREA PRIOR TO BEGINNING ANY EXCAVATION WORK.
4. PIPES SHALL BE IN CONFORMANCE WITH THE LATEST VERSION OF THE CITY OF AUSTIN STANDARD TECHNICAL SPECIFICATIONS 810.
5. VALVES SHALL BE IN CONFORMANCE WITH THE LATEST VERSION OF THE CITY OF AUSTIN STANDARD TECHNICAL SPECIFICATION 811S.
6. ALL PIPING, VALVES, AND SUPPORTS SHALL BE COATED WITH A HIGH SOLIDS EPOXY AND POLYURETHANE COATING SYSTEM AFTER INSTALLATION. HIGH SOLIDS EPOXY (SELF PRIMING) SHALL HAVE NOT LESS THAN 72 PERCENT SOLIDS BY VOLUME. (TNEMEC H8 EPOXY SERIES 104 OR EQUAL) ALIPHATIC OR ALIPHATIC-ACRYLIC POLYURETHANE, (TNEMEC ENDURA-SHIELD II SERIES 1075) 3 COAT SYSTEM - HIGH SOLIDS EPOXY PRIMER 4 TO 5 MILS DRY FILM THICKNESS, HIGH SOLIDS EPOXY INTERMEDIATE COAT 4 TO 5 MILS, POLYURETHANE 2.5 TO 3.5 MILS. APPLY PER THE MANUFACTURER'S INSTRUCTIONS. COLOR SHALL BE SELECTED BY THE OWNER.
7. SELF-ADHESIVE PIPE LABELS SUITABLE FOR EXTERIOR USE AS MANUFACTURED BY SETON OR EQUAL SHALL BE INSTALLED ON ALL PIPES. LABEL SPACING SHALL NOT EXCEED 20 FT AND SHALL BE VISIBLE FROM BOTH SIDES OF THE PIPE. WORDING AND COLOR CODING SHALL BE SELECTED BY THE OWNER.
8. UPON COMPLETION OF THE SITE CONSTRUCTION, FINAL SITE GRADING, AND REVEGETATION OF THE PROJECT SITE SHALL BE PERFORMED, ALL DEBRIS AND CONSTRUCTION MATERIALS SHALL BE REMOVED FROM THE SITE AND FINAL INSPECTION WILL BE CONDUCTED BY THE ENGINEER AND THE CITY OF AUSTIN.

KEY NOTES:

1. REMOVE ELBOW AND MOTORIZED VALVE. CONNECT NEW PIPING TO REMAINING PIPE FLANGE. INSTALL BLIND FLANGE ON REMAINING VALVE FLANGE.
2. REMOVE BULLHEAD TEE WITH BLIND FLANGE AND INSTALL BLIND FLANGE ON VERTICAL PIPE.
3. CONNECT NEW PIPING TO EXISTING PIPE FLANGE.
4. 6"x6"x4" REDUCING TEE
5. RUBBER FLAPPER STYLE CHECK VALVE SHALL BE VALMATIC SWINGFLEX OR EQUAL.
6. EBAA IRON MEGAFLANGE® OR EQUAL

ABBREVIATIONS

DR	DRAIN
RAS	RETURNED ACTIVATED SLUDGE
WAS	WASTE ACTIVATED SLUDGE
TYP	TYPICAL
PV	PLUG VALVE
CV	CHECK VALVE

KEY NOTES

1. ALTHOUGH NOT SHOWN HERE, DISCONNECT AND REMOVE TWO DISCONNECT SWITCHES AND THE PULLBOX SERVING THE WAS PUMPS AND THE MACERATOR.
2. COORDINATE WITH MECHANICAL TO DISCONNECT AND REMOVE THE FLOW INDICATING TRANSMITTER IN ITS ENTIRETY. DEMOLISH ALL CABLE/WIRE AND EXPOSED CONDUITS IN TIER ENTIRETY. CUT CONDUITS FLUSH WITH EQUIPMENT PAD AND SEAL WITH 50 YEAR NON SHRINK GROUT.
3. COORDINATE DEMOLITION OF THE MOTORS WITH MECHANICAL.
4. RAS PUMP FIELD CONTROL STATION AND PULLBOX ARE NOT SHOWN HERE. DISCONNECT AND REMOVE FIELD CONTROL STATION, PULLBOX, AND CONDUIT/WIRE IN ITS ENTIRETY.
5. ALTHOUGH NOT SHOWN HERE, DISCONNECT AND REMOVE RACK MOUNTED EQUIPMENT TIN THIS AREA, INCLUDING PULLBOX "SLT-PBOX-IC1" AND RECEPTACLES.
6. THE WAS VALVE WAS PARTIALLY DEMOLISHED DURING INITIAL FIELD INVESTIGATIONS. ALTHOUGH NOT SHOWN HERE, DISCONNECT AND REMOVE WAS VALVE AND ANY REMAINING ASSOCIATED EQUIPMENT IN ITS ENTIRETY.
7. DISCONNECT AND REMOVE WAS PUMPS, MACERATOR AND MACERATOR CONTROL PANEL. TO BE RELOCATED AND RETURNED TO SERVICE DURING RENOVATION ACTIVITIES. REFER TO DRAWING NO. [47E01] FOR ADDITIONAL INFORMATION

GENERAL NOTES

1. REFER TO DUCT BANK SECTION DEMOLITION SHEETS [05DE05] THROUGH [05DE08] FOR DEMOLITION DETAILS OF THE CONTENTS OF THE DUCT BANKS STUBBING-UP IN THIS AREA.
2. CUT ALL ABANDONED CONDUIT STUB-UPS FLUSH WITH THE EQUIPMENT PAD. FILL ENDS WITH WOOL-BATTING AND SEAL WITH 50 YEAR NON-SHRINK GROUT.

THIS CONFORMED DOCUMENT IS RELEASED FOR THE CONVENIENCE OF THE CONTRACTOR UNDER THE AUTHORITY OF:

K. A. HARUTUNIAN, P.E.
TX LIC NO. 59181

11-01-22
DATE

SEE DISCLAIMER FOR LIMITATIONS OF USE.

CONTRACT DOCUMENTS DATED FEBRUARY 28, 2022, AS PART OF THE BIDDING DOCUMENTS (DRAWINGS AND SPECIFICATIONS) AND SUBSEQUENTLY ISSUED ADDENDA HAVE BEEN MERGED INTO ONE CONFORMING SET OF DOCUMENTS FOR THE CONVENIENCE OF THE CONTRACTOR. IF INCONSISTENCIES OR AMBIGUITIES BETWEEN "CONFORMED" DOCUMENTS AND CONTRACT DOCUMENTS ARE FOUND, THE CONTRACT DOCUMENTS SHALL GOVERN.

This document, and the designs incorporated herein, is an instrument of professional service that has been developed, designed and prepared by Harutunian Engineering, Inc., and is not to be used, in whole or in part, for any other project without giving written notice to Harutunian Engineering, Inc.

REV	DATE	BY	DESCRIPTION

DESIGNED LHA
DRAWN LGD
CHECKED
DATE JUNE 2019

Digitally signed by Leonard H. Allen
Date: 2019.06.20

carollo TBPE No. F-882

CITY OF AUSTIN

CITY OF AUSTIN
WILD HORSE RANCH WWTP
EXPEDITED FACILITY IMPROVEMENTS
MECHANICAL
RAS / WAS PUMP STATION PLAN

VERIFY SCALES
BAR IS ONE INCH ON ORIGINAL DRAWING
0 1"
IF NOT ONE INCH ON THIS SHEET, ADJUST SCALES ACCORDINGLY

JOB NO. 10976A.00
DRAWING NO. 45M01
SHEET NO. OF

PROJECT NO. FILE NAME: 10976A0045M001.dgn

REV	DATE	BY	DESCRIPTION
			CONFORMED DOCUMENTS

DESIGNED HEI
DRAWN HEI
CHECKED HEI
DATE NOVEMBER 2022

** ORIGINAL SEALED BY K.A. HARUTUNIAN 02-28-22 TX PE 59181 **

HARUTUNIAN ENGINEERING INCORPORATED
ENGINEERING AND ENVIRONMENTAL CONSULTANTS
8100 CROSS PARK DRIVE
AUSTIN, TEXAS 78754
TBPE REGISTRATION NO. F-2408

carollo TBPELS No. F-882

CITY OF AUSTIN

CITY OF AUSTIN
WILD HORSE RANCH WWTP EXPANSION
DEMOLITION
EXISTING RAS PUMP STATION POWER AND I&C PLAN - DEMOLITION

VERIFY SCALES
BAR IS ONE INCH ON ORIGINAL DRAWING
0 1"
IF NOT ONE INCH ON THIS SHEET, ADJUST SCALES ACCORDINGLY

JOB NO. 10976A.00
DRAWING NO. 45DE01
SHEET NO. 144 OF 464

Plot Date: 20-JUN-2019 2:58:50 PM
User: LDhaton
Model: Layout1 ColorTable: gmtable.ctb DesignScript: Carollo_Std_Pen_v2002.pen PlotStable: 21
LAST SAVED BY: ldhaton

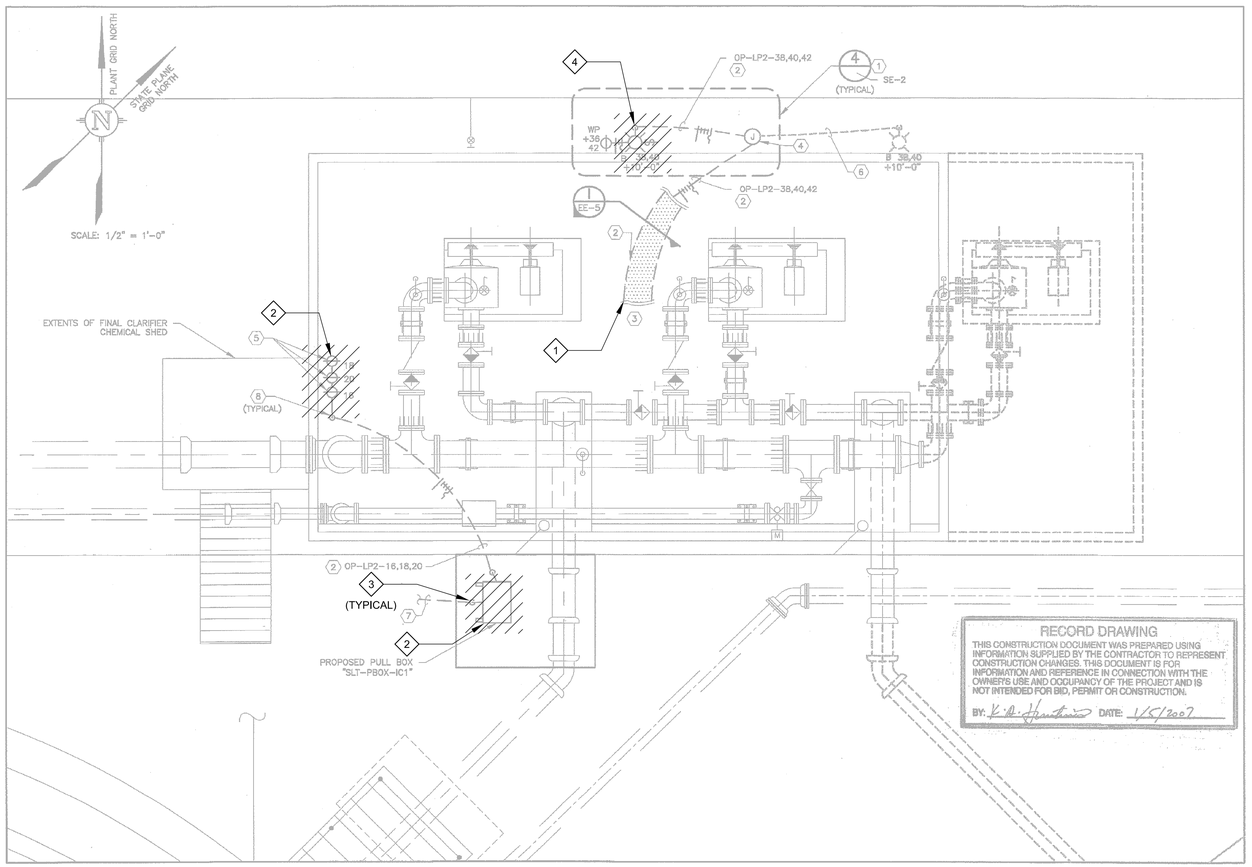

KEY NOTES:

1. FURNISH AND INSTALL LIGHT FIXTURE, LIGHT FIXTURE REINFORCED CONCRETE POST BASE, LIGHT FIXTURE POLE MOUNTED CONVENIENCE RECEPTACLE, LIGHT FIXTURE POLE MOUNTED SWITCH, LIGHT FIXTURE CIRCUITING UNDERGROUND JUNCTION BOX/HANHOLE, INTERCONNECT CONDUIT/WIRE, AND MAKE ALL FINAL CONNECTIONS PER THE DETAILS ON DRAWING NO. SE-2.
2. SPACE AND ENCASE IN SAND PER THE DETAILS ON DRAWING NO. SE-8.
3. PROPOSED DUCT BANK CONTINUES. REFER TO RAS PUMP STATION POWER/I&C PLAN ON DRAWING NO. EE-3, KEYNOTE 15.
4. PROPOSED LIGHTING FIXTURE CIRCUITING UNDERGROUND JUNCTION BOX/HANHOLE "SLT-JB-001". FURNISH AND INSTALL PER DETAILS ON DRAWING NO. SE-10. THE PROPOSED LIGHTING FIXTURE CIRCUITING UNDERGROUND JUNCTION BOX/HANDHOLE SHALL HAVE BLOCKOUT TO FACILITATE INSTALLATION OF FUTURE CONDUIT/WIRE BY OTHERS TO CONNECT TO FUTURE LIGHTING FIXTURE.
5. FURNISH AND INSTALL CONVENIENCE RECEPTACLES IN WEATHERPROOF ENCLOSURES SURFACE MOUNTED AT +36". SURFACE MOUNT ON RACK PER THE DETAILS ON DRAWING NO. SE-14. RECEPTACLE LOCATION SHOWN IS APPROXIMATE. PROPOSED RECEPTACLES ARE DEDICATED USE WITH THE FINAL CLARIFIER CHEMICAL SHED AND CHEMICAL FEED PUMP. FURNISH AND INSTALL ONE (1) CORD AND PLUG ASSEMBLY FOR ONE CHEMICAL FEED PUMP PER SPECIFICATIONS.
6. FUTURE LIGHT FIXTURE CIRCUITING TO BE INSTALLED IN THE FUTURE BY OTHERS. FUTURE CIRCUITING TO INTERCONNECT IN PROPOSED UNDERGROUND JUNCTION BOX/HANHOLE "SLT-JB-001" TO PROPOSED CIRCUITING VIA RESERVED CONDUIT BLOCKOUT IN PROPOSED UNDERGROUND JUNCTION BOX/HANDHOLE.
7. FURNISH AND INSTALL 1 #1 INSULATED GROUNDING CONDUCTOR IN 1" CONDUIT BETWEEN PULLBOX AND RAS PUMP STATION PERIMETER GROUNDING NETWORK. EXOTHERMIC WELD CONNECTION BETWEEN #1 INSULATED GROUNDING CONDUCTOR AND RAS PUMP STATION PERIMETER GROUNDING NETWORK. ENTIRE ROUTE OF PROPOSED CONDUIT/WIRE IS NOT SHOWN HERE FOR CLARITY. ALSO REFER TO SITE GROUNDING DRAWINGS NO. EL-31 FOR ADDITIONAL INFORMATION.
8. LOCATE PROPOSED CONDUIT/WIRE STUB-UP IMMEDIATELY ADJACENT TO EQUIPMENT. PROPOSED CONDUIT/WIRE STUB-UP IS SHOWN AWAY FROM EQUIPMENT FOR CLARITY. PERFORM STUB-UP PER THE DETAILS ON DRAWING NO. SE-14.

GENERAL NOTES:

1. LOCATIONS/SIZES OF ELECTRICAL EQUIPMENT SHOWN ARE APPROXIMATE. CONTRACTOR SHALL FIELD VERIFY ACTUAL CONDITIONS PRIOR TO COMMENCING CONSTRUCTION.
2. SUPPORT/RACK EXPOSED CONDUIT SYSTEMS PER DETAILS ON DRAWING NO. SE-7.
3. NOT ALL EQUIPMENT IS SHOWN, FOR CLARITY.
4. EXACT LOCATIONS OF MECHANICAL/STRUCTURAL/CIVIL COMPONENTS ARE NOT SHOWN ON THIS DRAWING. REFER TO MECHANICAL/STRUCTURAL/CIVIL DRAWINGS FOR EXACT LOCATIONS OF MECHANICAL/STRUCTURAL/CIVIL ITEMS.
5. CONTRACTOR SHALL SIZE ALL PULLBOXES PER, AND IN ACCORDANCE WITH, THE REQUIREMENTS OF THE NATIONAL ELECTRICAL CODE (N.E.C.).
6. CONTRACTOR SHALL CLOSELY AND CAREFULLY COORDINATE ROUTE OF PROPOSED CONDUIT/WIRE WITH EXISTING AND PROPOSED CIVIL/MECHANICAL/STRUCTURAL/ELECTRICAL SYSTEMS/COMPONENTS/EQUIPMENT/UTILITIES, ETC.
7. DARK LINEWORK DENOTES PROPOSED EQUIPMENT. LIGHT LINEWORK DENOTES FUTURE EQUIPMENT UNLESS NOTED OTHERWISE.

GENERAL NOTES (CONTINUED):

8. EXTREME CARE MUST BE TAKEN FOR THE INSTALLATION OF THE ELECTRICAL DUCT BANKS SINCE THERE ARE NO AVAILABLE AS BUILT RECORDS OF PROFILES IDENTIFYING THE LOCATION AND INVERT ELEVATIONS OF EXISTING UNDERGROUND ELECTRICAL SYSTEM AND UNDERGROUND MECHANICAL PIPING. ROUTING OF NEW DUCT BANK SHOWN IS BASED ON SCHEMATIC KNOWLEDGE OF THE SIZE OF MECHANICAL PIPING AND THEIR APPROXIMATE SIZE AND/OR LOCATION. NO DATA IS AVAILABLE PERTAINING TO EXISTING UNDERGROUND ELECTRICAL DUCT BANK SYSTEM AND ITS COORDINATION WITH THE UNDERGROUND MECHANICAL SYSTEM. THEREFORE THE CONTRACTOR IS TO EXERCISE EXTREME CARE, VERIFY LOCATION/ROUTING/ELEVATION OF EXISTING UNDERGROUND UTILITIES PRIOR TO COMMENCING FULL SCALE INSTALLATION PROCESS OF THE PROPOSED DUCT BANK SYSTEM. FOLLOWING THE DISCOVERY VERIFICATION OF EXISTING UNDERGROUND UTILITIES, SHOULD ADJUSTMENT/MODIFICATIONS BECOME A NECESSITY TO EITHER THE EXISTING OR PROPOSED SYSTEM (AS APPLICABLE), THE EXISTING DISCOVERED FIELD CONDITIONS MUST BE BROUGHT TO THE ENGINEERS ATTENTION FOR EXECUTION OF THE NECESSARY ADJUSTMENTS/MODIFICATIONS.

REFERENCE DRAWINGS:

RE-35 – RE-38 – PANEL SCHEDULES
SE-1 – LIGHTING FIXTURE SCHEDULE

REUSE OF DOCUMENTS
This document and the ideas and designs incorporated herein as an instrument of professional service has been developed, designed and prepared by Harutunian Engineering, Inc. and is not to be used, in whole or part, for any other project without the written authorization of the City of Austin and Harutunian Engineering, Inc. © 2003

HARUTUNIAN ENGINEERING INCORPORATED
ENGINEERING AND ENVIRONMENTAL CONSULTANTS
205 EAST RANDOLPH DRIVE
SUITE 900
AUSTIN, TEXAS
78768

NO.	DATE	REVISION	APPROV.
4			
3			
2			
1			

WARNING
0 1/2 1
IF THIS BAR DOES NOT MEASURE 1" THEN DRAWING IS NOT TO SCALE

K. A. HARUTUNIAN 59181 STATE OF TEXAS REGISTERED PROFESSIONAL ENGINEER
10/14/2003

CITY OF AUSTIN, TEXAS
NORTHEAST INTERIM WASTEWATER TREATMENT PLANT

RAS PUMP STATION
LIGHTING AND AUXILIARY SYSTEMS PLAN

Turner Collie & Braden Inc.
ENGINEERS • PLANNERS • PROJECT MANAGERS

Unit PUBLIC WORKS	Scale 1/2"=1'-0"	Date OCTOBER 2003	
Designed HEI	Checked HEI	Job No. 052-122094-0008	
Drawn HEI	Approved HEI	Sheet 131/327	
Dwg. No. EE-4			

KEY NOTES

1. REFER TO DUCT BANK SECTION DEMOLITION SHEETS [45DE03] FOR DEMOLITION DETAILS OF THE DUCT BANK CONTENTS.
2. DISCONNECT AND REMOVE RECEPTACLES, PULLBOX, AND ALL EXPOSED CONDUIT/WIRE IN ITS ENTIRETY.
3. CUT EMPTY EXPOSED CONDUITS ON THE SLAB AND MODIFY PER DETAIL E944/[00TE13].
4. DISCONNECT AND REMOVE LIGHT FIXTURE, POLE AND SWITCH TO REMAIN AND BE REUSED DURING RENOVATION.

THIS CONFORMED DOCUMENT IS RELEASED FOR THE CONVENIENCE OF THE CONTRACTOR UNDER THE AUTHORITY OF:

K. A. Harutunian — 11-01-22
K. A. HARUTUNIAN, P.E. — DATE
TX LIC NO. 59181

SEE DISCLAIMER FOR LIMITATIONS OF USE.

CONTRACT DOCUMENTS DATED FEBRUARY 28, 2022, AS PART OF THE BIDDING DOCUMENTS (DRAWINGS AND SPECIFICATIONS) AND SUBSEQUENTLY ISSUED ADDENDA HAVE BEEN MERGED INTO ONE CONFORMING SET OF DOCUMENTS FOR THE CONVENIENCE OF THE CONTRACTOR. IF INCONSISTENCIES OR AMBIGUITIES BETWEEN "CONFORMED" DOCUMENTS AND CONTRACT DOCUMENTS ARE FOUND, THE CONTRACT DOCUMENTS SHALL GOVERN.

This document, and the designs incorporated herein, is an instrument of professional service that has been developed, designed and prepared by Harutunian Engineering, Inc., and is not to be used, in whole or in part, for any other project without giving written notice to Harutunian Engineering, Inc.

REV	DATE	BY	DESCRIPTION
			CONFORMED DOCUMENTS

DESIGNED HEI
DRAWN HEI
CHECKED HEI
DATE NOVEMBER 2022

** ORIGINAL SEALED BY K.A. HARUTUNIAN 02-28-22 TX PE 59181 **

HARUTUNIAN ENGINEERING INCORPORATED
ENGINEERING AND ENVIRONMENTAL CONSULTANTS
8100 CROSS PARK DRIVE
AUSTIN, TEXAS 78754
TBPE REGISTRATION NO. F-2408

carollo® TBPELS No. F-882

CITY OF AUSTIN — FOUNDED 1839

CITY OF AUSTIN

CITY OF AUSTIN
WILD HORSE RANCH WWTP EXPANSION
DEMOLITION
EXISTING RAS PUMP STATION AUXILIARY PLAN - DEMOLITION

VERIFY SCALES
BAR IS ONE INCH ON ORIGINAL DRAWING
0 1"
IF NOT ONE INCH ON THIS SHEET, ADJUST SCALES ACCORDINGLY

JOB NO. 10976A.00
DRAWING NO. 45DE02
SHEET NO. 145 OF 464

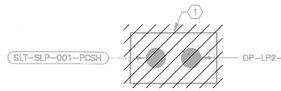

DUCT BANK SECTION A
SCALE: NTS
EE-3

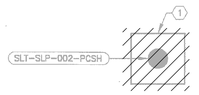

DUCT BANK SECTION B
SCALE: NTS
EE-3

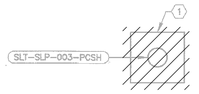

DUCT BANK SECTION C
SCALE: NTS
EE-3

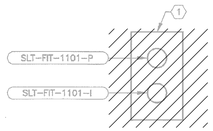

DUCT BANK SECTION D
SCALE: NTS
EE-3

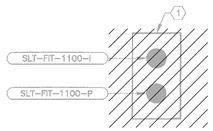

DUCT BANK SECTION E
SCALE: NTS
EE-3

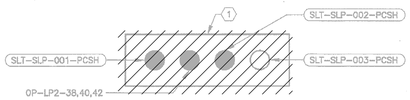

DUCT BANK SECTION F
SCALE: NTS
EE-3

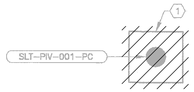

DUCT BANK SECTION G
SCALE: NTS
EE-3

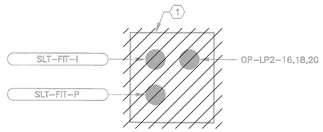

DUCT BANK SECTION H
SCALE: NTS
EE-3

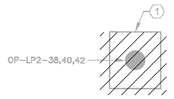

DUCT BANK SECTION I
SCALE: NTS
EE-4

CONDUIT/DUCT BANK SECTION DIMENSION TABLE

LEGEND:

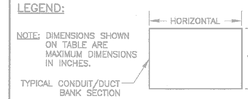

SECTION IDENTIFIER	HORIZONTAL (INCHES)	VERTICAL (INCHES)
A	18"	12"
B	12"	12"
C	12"	12"
D	12"	18"
E	12"	18"
F	30"	12"
G	12"	12"
H	18"	18"
I	12"	12"

NOTE: REFER TO "CONDUIT/DUCT BANK SECTION DIMENSION TABLE" ON THIS DRAWING FOR MAXIMUM DIMENSIONS OF THE CONDUIT/DUCT BANK SECTIONS ON THIS DRAWING.

KEY NOTES:

(1) SPACE AND ENCASE IN SAND PER THE DETAILS ON DRAWING NO. SE-8.

GENERAL NOTES:

1. EXTREME CARE MUST BE TAKEN FOR THE INSTALLATION OF THE ELECTRICAL DUCT BANKS SINCE THERE ARE NO AVAILABLE AS BUILT RECORDS OF PROFILES IDENTIFYING THE LOCATION AND INVERT ELEVATIONS OF EXISTING UNDERGROUND ELECTRICAL SYSTEM AND UNDERGROUND MECHANICAL PIPING. ROUTING OF NEW DUCT BANK SHOWN IS BASED ON SCHEMATIC KNOWLEDGE OF THE SIZE OF MECHANICAL PIPING AND THEIR APPROXIMATE SIZE AND/OR LOCATION. NO DATA IS AVAILABLE PERTAINING TO EXISTING UNDERGROUND ELECTRICAL DUCT BANK SYSTEM AND ITS COORDINATION WITH THE UNDERGROUND MECHANICAL SYSTEM. THEREFORE THE CONTRACTOR IS TO EXERCISE EXTREME CARE, VERIFY LOCATION/ROUTING/ELEVATION OF EXISTING UNDERGROUND UTILITIES PRIOR TO COMMENCING FULL SCALE INSTALLATION PROCESS OF THE PROPOSED DUCT BANK SYSTEM. FOLLOWING THE DISCOVERY VERIFICATION OF EXISTING UNDERGROUND UTILITIES, SHOULD ADJUSTMENT/MODIFICATIONS BECOME A NECESSITY TO EITHER THE EXISTING OR PROPOSED SYSTEM (AS APPLICABLE), THE EXISTING DISCOVERED FIELD CONDITIONS MUST BE BROUGHT TO THE ENGINEERS ATTENTION FOR EXECUTION OF THE NECESSARY ADJUSTMENTS/MODIFICATIONS.

REFERENCE DRAWINGS:

RE-33 – RE-34 – CONDUIT/WIRE SCHEDULE

RE-35 – RE-38 – PANEL SCHEDULES

RECORD DRAWING
THIS CONSTRUCTION DOCUMENT WAS PREPARED USING INFORMATION SUPPLIED BY THE CONTRACTOR TO REPRESENT CONSTRUCTION CHANGES. THIS DOCUMENT IS FOR INFORMATION AND REFERENCE IN CONNECTION WITH THE OWNER'S USE AND OCCUPANCY OF THE PROJECT AND IS NOT INTENDED FOR BID, PERMIT OR CONSTRUCTION.
BY: K.A. Harutunian DATE: 1/5/2007

REUSE OF DOCUMENTS
This document and the ideas and designs incorporated herein as an instrument of professional service has been developed, designed and prepared by Harutunian Engineering, Inc. and is not to be used, in whole or part, for any other project without the written authorization of the City of Austin and Harutunian Engineering, Inc. © 2003

HARUTUNIAN ENGINEERING INCORPORATED
ENGINEERING AND ENVIRONMENTAL CONSULTANTS
305 EAST HIGHLAND DRIVE
SUITE 200
AUSTIN, TEXAS
78758

NO.	DATE	REVISION	APPROV.
4			
3			
2			
1			

WARNING
0 1/2 1
IF THIS BAR DOES NOT MEASURE 1" THEN DRAWING IS NOT TO SCALE

K. A. HARUTUNIAN 59181 REGISTERED PROFESSIONAL ENGINEER STATE OF TEXAS
10/19/2003

CITY OF AUSTIN, TEXAS
NORTHEAST INTERIM WASTEWATER TREATMENT PLANT

RAS PUMP STATION AREA DUCT BANK SECTIONAL VIEWS (SHEET 1 OF 1)

Turner Collie & Braden Inc.
ENGINEERS • PLANNERS • PROJECT MANAGERS

Unit PUBLIC WORKS	Scale NONE	Date OCTOBER 2003	
Designed HEI	Checked HEI	Job No. 052-122084-0008	
Drawn HEI	Approved HEI	Sheet 132/327	
Dwg. No. EE-5			

THIS CONFORMED DOCUMENT IS RELEASED FOR THE CONVENIENCE OF THE CONTRACTOR UNDER THE AUTHORITY OF:

K. A. Harutunian — 11-01-22

K. A. HARUTUNIAN, P.E. — DATE
TX LIC NO. 59181

SEE DISCLAIMER FOR LIMITATIONS OF USE.

CONTRACT DOCUMENTS DATED FEBRUARY 28, 2022, AS PART OF THE BIDDING DOCUMENTS (DRAWINGS AND SPECIFICATIONS) AND SUBSEQUENTLY ISSUED ADDENDA HAVE BEEN MERGED INTO ONE CONFORMING SET OF DOCUMENTS FOR THE CONVENIENCE OF THE CONTRACTOR. IF INCONSISTENCIES OR AMBIGUITIES BETWEEN "CONFORMED" DOCUMENTS AND CONTRACT DOCUMENTS ARE FOUND, THE CONTRACT DOCUMENTS SHALL GOVERN.

This document, and the designs incorporated herein, is an instrument of professional service that has been developed, designed and prepared by Harutunian Engineering, Inc., and is not to be used, in whole or in part, for any other project without giving written notice to Harutunian Engineering, Inc.

REV	DATE	BY	DESCRIPTION
			CONFORMED DOCUMENTS

DESIGNED HEI
DRAWN HEI
CHECKED HEI
DATE NOVEMBER 2022

** ORIGINAL SEALED BY K.A. HARUTUNIAN 02-28-22 TX PE 59181 **

HARUTUNIAN ENGINEERING INCORPORATED
ENGINEERING AND ENVIRONMENTAL CONSULTANTS
8100 CROSS PARK DRIVE
AUSTIN, TEXAS 78754
TBPE REGISTRATION NO. F-2408

carollo
TBPELS No. F-882

CITY OF AUSTIN
FOUNDED 1839

CITY OF AUSTIN

CITY OF AUSTIN
WILD HORSE RANCH WWTP EXPANSION
DEMOLITION
EXISTING RAS PUMP STATION
DUCT BANK SECTIONS - DEMOLITION

VERIFY SCALES
BAR IS ONE INCH ON ORIGINAL DRAWING
0 1"
IF NOT ONE INCH ON THIS SHEET, ADJUST SCALES ACCORDINGLY

JOB NO. 10976A.00
DRAWING NO. 45DE03
SHEET NO. 146 OF 464

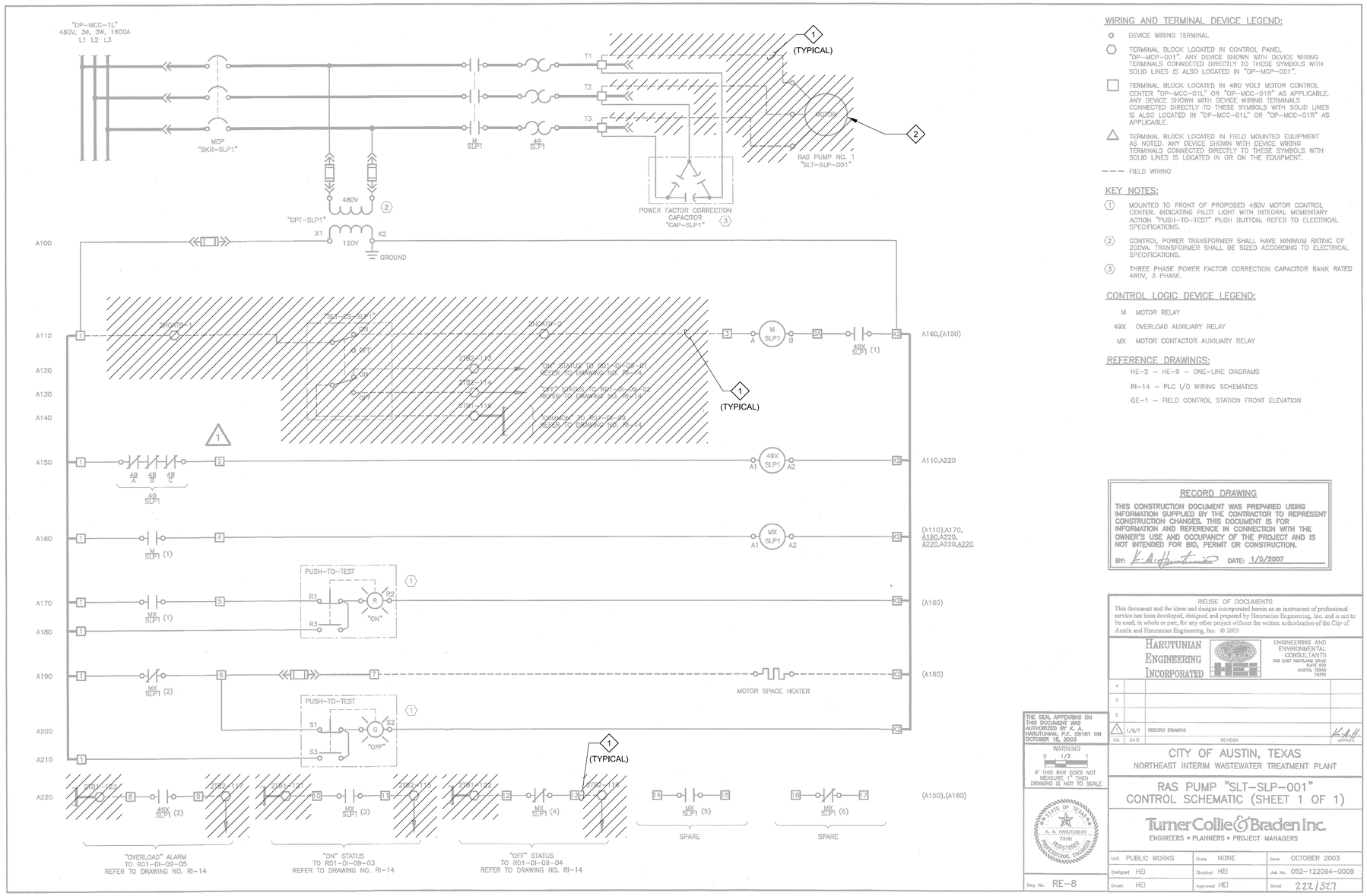

WIRING AND TERMINAL DEVICE LEGEND:

- ○ DEVICE WIRING TERMINAL
- ⬡ TERMINAL BLOCK LOCATED IN CONTROL PANEL "OP-MCP-001". ANY DEVICE SHOWN WITH DEVICE WIRING TERMINALS CONNECTED DIRECTLY TO THESE SYMBOLS WITH SOLID LINES IS ALSO LOCATED IN "OP-MCP-001".
- □ TERMINAL BLOCK LOCATED IN 480 VOLT MOTOR CONTROL CENTER "OP-MCC-01L" OR "OP-MCC-01R" AS APPLICABLE. ANY DEVICE SHOWN WITH DEVICE WIRING TERMINALS CONNECTED DIRECTLY TO THESE SYMBOLS WITH SOLID LINES IS ALSO LOCATED IN "OP-MCC-01L" OR "OP-MCC-01R" AS APPLICABLE.
- △ TERMINAL BLOCK LOCATED IN FIELD MOUNTED EQUIPMENT AS NOTED. ANY DEVICE SHOWN WITH DEVICE WIRING TERMINALS CONNECTED DIRECTLY TO THESE SYMBOLS WITH SOLID LINES IS LOCATED IN OR ON THE EQUIPMENT.
- – – – FIELD WIRING

KEY NOTES:

1. MOUNTED TO FRONT OF PROPOSED 480V MOTOR CONTROL CENTER. INDICATING PILOT LIGHT WITH INTEGRAL MOMENTARY ACTION "PUSH-TO-TEST" PUSH BUTTON. REFER TO ELECTRICAL SPECIFICATIONS.
2. CONTROL POWER TRANSFORMER SHALL HAVE MINIMUM RATING OF 200VA. TRANSFORMER SHALL BE SIZED ACCORDING TO ELECTRICAL SPECIFICATIONS.
3. THREE PHASE POWER FACTOR CORRECTION CAPACITOR BANK RATED 480V, 3 PHASE.

CONTROL LOGIC DEVICE LEGEND:

- M MOTOR RELAY
- 49X OVERLOAD AUXILIARY RELAY
- MX MOTOR CONTACTOR AUXILIARY RELAY

REFERENCE DRAWINGS:

- HE-2 – HE-9 – ONE-LINE DIAGRAMS
- RI-14 – PLC I/O WIRING SCHEMATICS
- QE-1 – FIELD CONTROL STATION FRONT ELEVATION

KEY NOTES

1. DISCONNECT AND REMOVE EXISTING FIELD WIRING ROUTING BETWEEN THE EXISTING MOTOR CONTROL CENTER AND THE MAIN CONTROL PANEL. FIELD CONTROL STATION, MOTOR, ETC., AS APPLICABLE. REFER TO PLAN DRAWINGS FOR ADDITIONAL INFORMATION.
2. COORDINATE DEMOLITION OF THE MOTOR WITH PROCESS MECHANICAL.

RECORD DRAWING

THIS CONSTRUCTION DOCUMENT WAS PREPARED USING INFORMATION SUPPLIED BY THE CONTRACTOR TO REPRESENT CONSTRUCTION CHANGES. THIS DOCUMENT IS FOR INFORMATION AND REFERENCE IN CONNECTION WITH THE OWNER'S USE AND OCCUPANCY OF THE PROJECT AND IS NOT INTENDED FOR BID, PERMIT OR CONSTRUCTION.

BY: K.A. Harutunian DATE: 1/5/2007

REUSE OF DOCUMENTS
This document and the ideas and designs incorporated herein as an instrument of professional service has been developed, designed and prepared by Harutunian Engineering, Inc. and is not to be used, in whole or part, for any other project without the written authorization of the City of Austin and Harutunian Engineering, Inc. © 2003

HARUTUNIAN ENGINEERING INCORPORATED
ENGINEERING AND ENVIRONMENTAL CONSULTANTS
200 EAST MAPLAND DRIVE
SUITE 600
AUSTIN, TEXAS
78752

NO.	DATE	REVISION	APPROV.
4			
3			
2			
1	1/9/7	RECORD DRAWING	

THE SEAL APPEARING ON THIS DOCUMENT WAS AUTHORIZED BY K. A. HARUTUNIAN, P.E. 59181 ON OCTOBER 18, 2003

WARNING
0 1/2 1
IF THIS BAR DOES NOT MEASURE 1" THEN DRAWING IS NOT TO SCALE

STATE OF TEXAS
K. A. HARUTUNIAN
59181
REGISTERED PROFESSIONAL ENGINEER

Dwg. No. RE-8

CITY OF AUSTIN, TEXAS
NORTHEAST INTERIM WASTEWATER TREATMENT PLANT

RAS PUMP "SLT-SLP-001"
CONTROL SCHEMATIC (SHEET 1 OF 1)

Turner Collie & Braden Inc.
ENGINEERS • PLANNERS • PROJECT MANAGERS

Unit PUBLIC WORKS	Scale NONE	Date OCTOBER 2003	
Designed HEI	Checked HEI	Job No. 052-122094-0008	
Drawn HEI	Approved HEI	Sheet 222/327	

THIS CONFORMED DOCUMENT IS RELEASED FOR THE CONVENIENCE OF THE CONTRACTOR UNDER THE AUTHORITY OF:

K. A. Harutunian — 11-01-22

K. A. HARUTUNIAN, P.E. DATE
TX LIC NO. 59181

SEE DISCLAIMER FOR LIMITATIONS OF USE.

CONTRACT DOCUMENTS DATED FEBRUARY 28, 2022, AS PART OF THE BIDDING DOCUMENTS (DRAWINGS AND SPECIFICATIONS) AND SUBSEQUENTLY ISSUED ADDENDA HAVE BEEN MERGED INTO ONE CONFORMING SET OF DOCUMENTS FOR THE CONVENIENCE OF THE CONTRACTOR. IF INCONSISTENCIES OR AMBIGUITIES BETWEEN "CONFORMED" DOCUMENTS AND CONTRACT DOCUMENTS ARE FOUND, THE CONTRACT DOCUMENTS SHALL GOVERN.

This document, and the designs incorporated herein, is an instrument of professional service that has been developed, designed and prepared by Harutunian Engineering, Inc., and is not to be used, in whole or in part, for any other project without giving written notice to Harutunian Engineering, Inc.

REV	DATE	BY	DESCRIPTION
			CONFORMED DOCUMENTS

DESIGNED HEI
DRAWN HEI
CHECKED HEI
DATE NOVEMBER 2022

** ORIGINAL SEALED BY K.A. HARUTUNIAN 02-28-22 TX PE 59181 **

HARUTUNIAN ENGINEERING INCORPORATED
ENGINEERING AND ENVIRONMENTAL CONSULTANTS
8100 CROSS PARK DRIVE
AUSTIN, TEXAS 78754
TBPE REGISTRATION NO. F-2408

carollo
TBPELS No. F-882

CITY OF AUSTIN
FOUNDED 1839

CITY OF AUSTIN

CITY OF AUSTIN
WILD HORSE RANCH WWTP EXPANSION
DEMOLITION
RAS PUMP NO. 1
CONTROL WIRING SCHEMATICS - DEMOLITION

VERIFY SCALES
BAR IS ONE INCH ON ORIGINAL DRAWING
0 1"
IF NOT ONE INCH ON THIS SHEET, ADJUST SCALES ACCORDINGLY

JOB NO. 10976A.00
DRAWING NO. 45DN01
SHEET NO. 147 OF 464

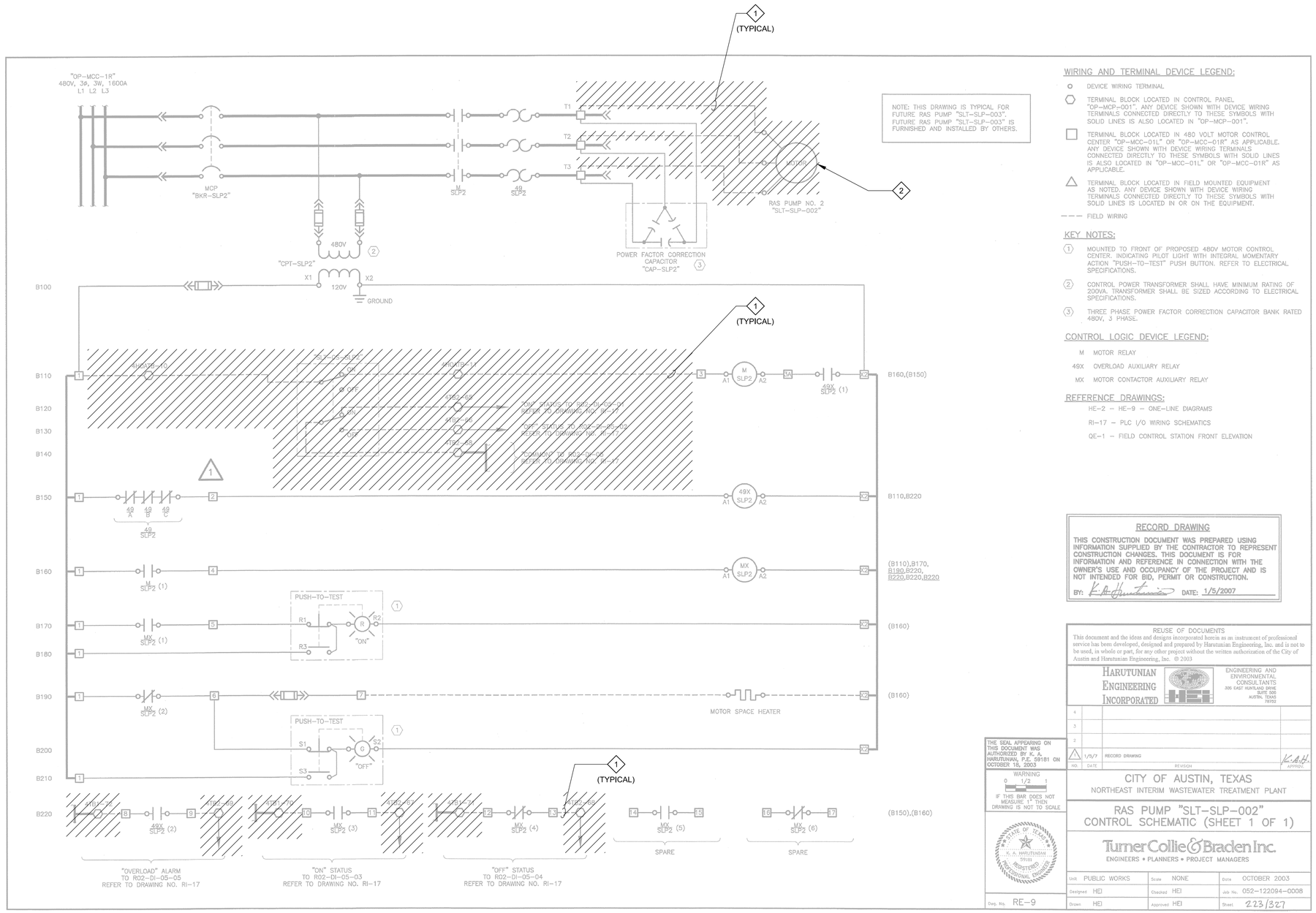

KEY NOTES

1. DISCONNECT AND REMOVE EXISTING FIELD WIRING ROUTING BETWEEN THE EXISTING MOTOR CONTROL CENTER AND THE MAIN CONTROL PANEL, FIELD CONTROL STATION , MOTOR, ETC., AS APPLICABLE. REFER TO PLAN DRAWINGS FOR ADDITIONAL INFORMATION.
2. COORDINATE DEMOLITION OF THE MOTOR WITH PROCESS MECHANICAL.

WIRING AND TERMINAL DEVICE LEGEND:

- ○ DEVICE WIRING TERMINAL
- ⬡ TERMINAL BLOCK LOCATED IN CONTROL PANEL "OP-MCP-001". ANY DEVICE SHOWN WITH DEVICE WIRING TERMINALS CONNECTED DIRECTLY TO THESE SYMBOLS WITH SOLID LINES IS ALSO LOCATED IN "OP-MCP-001".
- □ TERMINAL BLOCK LOCATED IN 480 VOLT MOTOR CONTROL CENTER "OP-MCC-01L" OR "OP-MCC-01R" AS APPLICABLE. ANY DEVICE SHOWN WITH DEVICE WIRING TERMINALS CONNECTED DIRECTLY TO THESE SYMBOLS WITH SOLID LINES IS ALSO LOCATED IN "OP-MCC-01L" OR "OP-MCC-01R" AS APPLICABLE.
- △ TERMINAL BLOCK LOCATED IN FIELD MOUNTED EQUIPMENT AS NOTED. ANY DEVICE SHOWN WITH DEVICE WIRING TERMINALS CONNECTED DIRECTLY TO THESE SYMBOLS WITH SOLID LINES IS LOCATED IN OR ON THE EQUIPMENT.
- — — FIELD WIRING

KEY NOTES:

1. MOUNTED TO FRONT OF PROPOSED 480V MOTOR CONTROL CENTER, INDICATING PILOT LIGHT WITH INTEGRAL MOMENTARY ACTION "PUSH-TO-TEST" PUSH BUTTON. REFER TO ELECTRICAL SPECIFICATIONS.
2. CONTROL POWER TRANSFORMER SHALL HAVE MINIMUM RATING OF 200VA. TRANSFORMER SHALL BE SIZED ACCORDING TO ELECTRICAL SPECIFICATIONS.
3. THREE PHASE POWER FACTOR CORRECTION CAPACITOR BANK RATED 480V, 3 PHASE.

CONTROL LOGIC DEVICE LEGEND:

M MOTOR RELAY
49X OVERLOAD AUXILIARY RELAY
MX MOTOR CONTACTOR AUXILIARY RELAY

REFERENCE DRAWINGS:

HE-2 – HE-9 – ONE-LINE DIAGRAMS
RI-17 – PLC I/O WIRING SCHEMATICS
QE-1 – FIELD CONTROL STATION FRONT ELEVATION

RECORD DRAWING

THIS CONSTRUCTION DOCUMENT WAS PREPARED USING INFORMATION SUPPLIED BY THE CONTRACTOR TO REPRESENT CONSTRUCTION CHANGES. THIS DOCUMENT IS FOR INFORMATION AND REFERENCE IN CONNECTION WITH THE OWNER'S USE AND OCCUPANCY OF THE PROJECT AND IS NOT INTENDED FOR BID, PERMIT OR CONSTRUCTION.

BY: K. A. Hartunian DATE: 1/5/2007

REUSE OF DOCUMENTS
This document and the ideas and designs incorporated herein as an instrument of professional service has been developed, designed and prepared by Harutunian Engineering, Inc. and is not to be used, in whole or part, for any other project without the written authorization of the City of Austin and Harutunian Engineering, Inc. © 2003

HARUTUNIAN ENGINEERING INCORPORATED
ENGINEERING AND ENVIRONMENTAL CONSULTANTS
305 EAST HUNTLAND DRIVE, SUITE 505, AUSTIN, TEXAS 78752

NO.	DATE	REVISION	APPROV.
4			
3			
2			
1	1/5/7	RECORD DRAWING	K.A.H.

THE SEAL APPEARING ON THIS DOCUMENT WAS AUTHORIZED BY K. A. HARUTUNIAN, P.E. 59181 ON OCTOBER 18, 2003

WARNING
0 1/2 1
IF THIS BAR DOES NOT MEASURE 1" THEN DRAWING IS NOT TO SCALE

STATE OF TEXAS K. A. HARUTUNIAN 59181 REGISTERED PROFESSIONAL ENGINEER

Dwg. No. RE-9

CITY OF AUSTIN, TEXAS
NORTHEAST INTERIM WASTEWATER TREATMENT PLANT

RAS PUMP "SLT-SLP-002"
CONTROL SCHEMATIC (SHEET 1 OF 1)

Turner Collie & Braden Inc.
ENGINEERS • PLANNERS • PROJECT MANAGERS

Unit PUBLIC WORKS	Scale NONE	Date OCTOBER 2003	
Designed HEI	Checked HEI	Job No. 052-122094-0008	
Drawn HEI	Approved HEI	Sheet 223/327	

THIS CONFORMED DOCUMENT IS RELEASED FOR THE CONVENIENCE OF THE CONTRACTOR UNDER THE AUTHORITY OF:

K. A. Hartunian 11-01-22

K. A. HARUTUNIAN, P.E. DATE
TX LIC NO. 59181

SEE DISCLAIMER FOR LIMITATIONS OF USE.

CONTRACT DOCUMENTS DATED FEBRUARY 28, 2022, AS PART OF THE BIDDING DOCUMENTS (DRAWINGS AND SPECIFICATIONS) AND SUBSEQUENTLY ISSUED ADDENDA HAVE BEEN MERGED INTO ONE CONFORMING SET OF DOCUMENTS FOR THE CONVENIENCE OF THE CONTRACTOR. IF INCONSISTENCIES OR AMBIGUITIES BETWEEN "CONFORMED" DOCUMENTS AND CONTRACT DOCUMENTS ARE FOUND, THE CONTRACT DOCUMENTS SHALL GOVERN.

This document, and the designs incorporated herein, is an instrument of professional service that has been developed, designed and prepared by Harutunian Engineering, Inc., and is not to be used, in whole or in part, for any other project without giving written notice to Harutunian Engineering, Inc.

REV	DATE	BY	DESCRIPTION
			CONFORMED DOCUMENTS

DESIGNED HEI
DRAWN HEI
CHECKED HEI
DATE NOVEMBER 2022

** ORIGINAL SEALED BY K.A. HARUTUNIAN 02-28-22 TX PE 59181 **

HARUTUNIAN ENGINEERING INCORPORATED
ENGINEERING AND ENVIRONMENTAL CONSULTANTS
8100 CROSS PARK DRIVE
AUSTIN, TEXAS 78754
TBPE REGISTRATION NO. F-2408

carollo® TBPELS No. F-882

CITY OF AUSTIN FOUNDED 1839

CITY OF AUSTIN

CITY OF AUSTIN
WILD HORSE RANCH WWTP EXPANSION
DEMOLITION
RAS PUMP NO. 2
CONTROL WIRING SCHEMATICS - DEMOLITION

VERIFY SCALES
BAR IS ONE INCH ON ORIGINAL DRAWING
0 1"
IF NOT ONE INCH ON THIS SHEET, ADJUST SCALES ACCORDINGLY

JOB NO. 10976A.00
DRAWING NO. 45DN02
SHEET NO. 148 OF 464

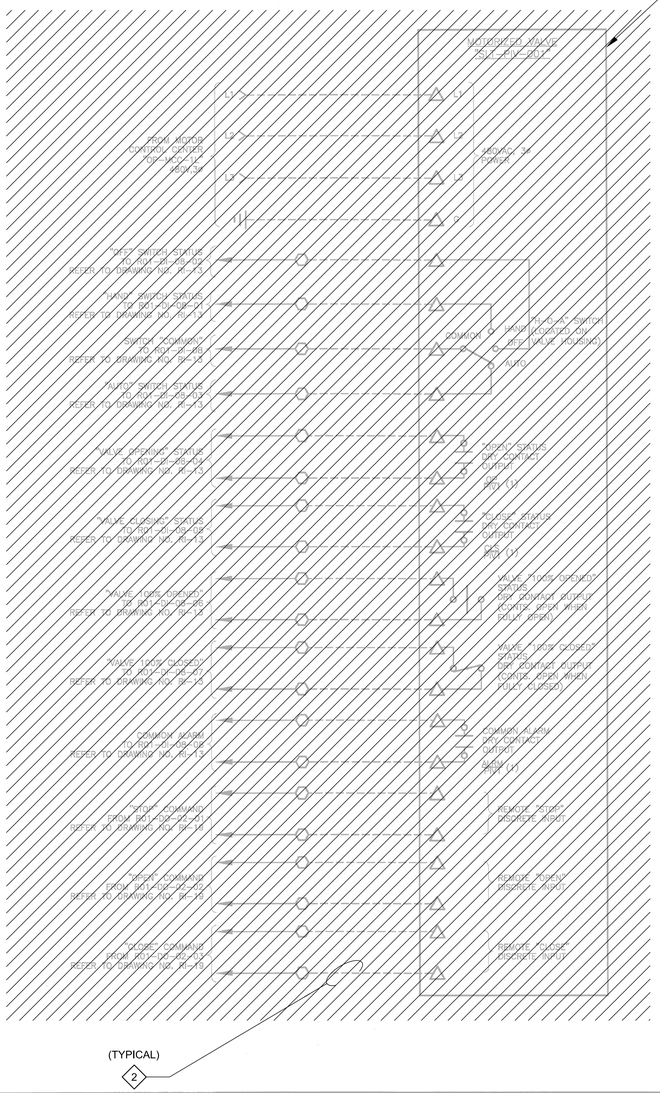

KEY NOTES

1. DISCONNECT AND REMOVE EXISTING MOTORIZED VALVE IN ITS ENTIRETY.
2. DISCONNECT AND REMOVE EXISTING ASSOCIATED FIELD WIRING IN ITS ENTIRETY. REFER TO PLAN DRAWINGS FOR ADDITIONAL REQUIREMENTS AND INFORMATION.

WIRING AND TERMINAL DEVICE LEGEND:

- ○ DEVICE WIRING TERMINAL
- ⬡ TERMINAL BLOCK LOCATED IN CONTROL PANEL "OP-MCP-001". ANY DEVICE SHOWN WITH DEVICE WIRING TERMINALS CONNECTED DIRECTLY TO THESE SYMBOLS WITH SOLID LINES IS ALSO LOCATED IN "OP-MCP-001".
- □ TERMINAL BLOCK LOCATED IN 480 VOLT MOTOR CONTROL CENTER "OP-MCC-01L" OR "OP-MCC-01R" AS APPLICABLE. ANY DEVICE SHOWN WITH DEVICE WIRING TERMINALS CONNECTED DIRECTLY TO THESE SYMBOLS WITH SOLID LINES IS ALSO LOCATED IN "OP-MCC-01L" OR "OP-MCC-01R" AS APPLICABLE.
- △ TERMINAL BLOCK LOCATED IN FIELD MOUNTED EQUIPMENT AS NOTED. ANY DEVICE SHOWN WITH DEVICE WIRING TERMINALS CONNECTED DIRECTLY TO THESE SYMBOLS WITH SOLID LINES IS LOCATED IN OR ON THE EQUIPMENT.
- — — FIELD WIRING

GENERAL NOTES:

1. ALL FIELD DEVICES ARE NOT SHOWN ON THIS DRAWING. THE ACTUAL FIELD DEVICE QUANTITY/LOCATION MAY VARY. IT IS THE RESPONSIBILITY OF THE CONTRACTOR TO FURNISH AND INSTALL ALL NECESSARY FIELD DEVICE(S), FIELD DEVICE(S) INTERCONNECT CONDUIT/WIRE AND MAKE ALL FINAL CONNECTIONS PER THE SPECIFICATIONS, THE MANUFACTURER'S RECOMMENDATIONS, AND THE MANUFACTURER'S WIRING DIAGRAMS. THE CONTRACTOR SHALL SIZE PROPOSED CONDUIT/WIRE PER THE SPECIFICATIONS. CLOSELY AND CAREFULLY COORDINATE FIELD DEVICE WIRING REQUIREMENTS WITH THE MANUFACTURER'S WIRING DIAGRAMS AND THE SPECIFICATIONS. CLOSELY AND CAREFULLY COORDINATE CONDUIT/WIRE CONNECTION WITH THE MANUFACTURER AND MAKE ALL FINAL CONNECTIONS. FIELD ROUTE PROPOSED CONDUIT/WIRE PER THE SPECIFICATIONS TO THE SATISFACTION OF THE ENGINEER AND THE OWNER AT NO ADDITIONAL COST TO THE OWNER. CLOSELY AND CAREFULLY COORDINATE ROUTE OF PROPOSED CONDUIT/WIRE, VERIFYING ALL POINTS OF CONNECTION PRIOR TO COMMENCING INSTALLATION. ALSO REFER TO THE APPLICABLE FLOOR PLAN DRAWINGS FOR ADDITIONAL INFORMATION.

REFERENCE DRAWINGS:

HE-2 – HE-9 – ONE-LINE DIAGRAMS

RI-13 – PLC I/O WIRING SCHEMATICS

RI-19 – PLC I/O WIRING SCHEMATICS

RECORD DRAWING
THIS CONSTRUCTION DOCUMENT WAS PREPARED USING INFORMATION SUPPLIED BY THE CONTRACTOR TO REPRESENT CONSTRUCTION CHANGES. THIS DOCUMENT IS FOR INFORMATION AND REFERENCE IN CONNECTION WITH THE OWNER'S USE AND OCCUPANCY OF THE PROJECT AND IS NOT INTENDED FOR BID, PERMIT OR CONSTRUCTION.
BY: K.A. Harutunian DATE: 1/5/2007

REUSE OF DOCUMENTS
This document and the ideas and designs incorporated herein as an instrument of professional service has been developed, designed and prepared by Harutunian Engineering, Inc. and is not to be used, in whole or part, for any other project without the written authorization of the City of Austin and Harutunian Engineering, Inc. © 2003

HARUTUNIAN ENGINEERING INCORPORATED
ENGINEERING AND ENVIRONMENTAL CONSULTANTS
305 EAST HUNTLAND DRIVE
SUITE 500
AUSTIN, TEXAS
78752

NO.	DATE	REVISION	APPROV.
4			
3			
2			
1			

WARNING
0 1/2 1
IF THIS BAR DOES NOT MEASURE 1" THEN DRAWING IS NOT TO SCALE

CITY OF AUSTIN, TEXAS
NORTHEAST INTERIM WASTEWATER TREATMENT PLANT

WAS VALVE "SLT-PIV-001"
FIELD WIRING SCHEMATIC (SHEET 1 OF 1)

Turner Collie & Braden Inc.
ENGINEERS • PLANNERS • PROJECT MANAGERS

Unit PUBLIC WORKS	Scale NONE	Date OCTOBER 2003	
Designed HEI	Checked HEI	Job No. 052-122094-0008	
Drawn HEI	Approved HEI	Sheet 242/373	
Dwg. No. RE-28			

STATE OF TEXAS · K. A. HARUTUNIAN · 59181 · REGISTERED PROFESSIONAL ENGINEER · 10/7/2003

THIS CONFORMED DOCUMENT IS RELEASED FOR THE CONVENIENCE OF THE CONTRACTOR UNDER THE AUTHORITY OF:

K.A. Harutunian — 11-01-22

K. A. HARUTUNIAN, P.E. — DATE
TX LIC NO. 59181

SEE DISCLAIMER FOR LIMITATIONS OF USE.

CONTRACT DOCUMENTS DATED FEBRUARY 28, 2022, AS PART OF THE BIDDING DOCUMENTS (DRAWINGS AND SPECIFICATIONS) AND SUBSEQUENTLY ISSUED ADDENDA HAVE BEEN MERGED INTO ONE CONFORMING SET OF DOCUMENTS FOR THE CONVENIENCE OF THE CONTRACTOR. IF INCONSISTENCIES OR AMBIGUITIES BETWEEN "CONFORMED" DOCUMENTS AND CONTRACT DOCUMENTS ARE FOUND, THE CONTRACT DOCUMENTS SHALL GOVERN.

This document, and the designs incorporated herein, is an instrument of professional service that has been developed, designed and prepared by Harutunian Engineering, Inc., and is not to be used, in whole or in part, for any other project without giving written notice to Harutunian Engineering, Inc.

REV	DATE	BY	DESCRIPTION
			CONFORMED DOCUMENTS

DESIGNED HEI
DRAWN HEI
CHECKED HEI
DATE NOVEMBER 2022

** ORIGINAL SEALED BY K.A. HARUTUNIAN 02-28-22 TX PE 59181 **

HARUTUNIAN ENGINEERING INCORPORATED
ENGINEERING AND ENVIRONMENTAL CONSULTANTS
8100 CROSS PARK DRIVE
AUSTIN, TEXAS 78754
TBPE REGISTRATION NO. F-2408

carollo
TBPELS No. F-882

CITY OF AUSTIN
FOUNDED 1839

CITY OF AUSTIN

CITY OF AUSTIN
WILD HORSE RANCH WWTP EXPANSION
DEMOLITION
WAS VALVE
FIELD INTERFACE WIRING SCHEMATIC - DEMOLITION

VERIFY SCALES
BAR IS ONE INCH ON ORIGINAL DRAWING
0 1"
IF NOT ONE INCH ON THIS SHEET, ADJUST SCALES ACCORDINGLY

JOB NO. 10976A.00
DRAWING NO. 45DN03
SHEET NO. 149 OF 464

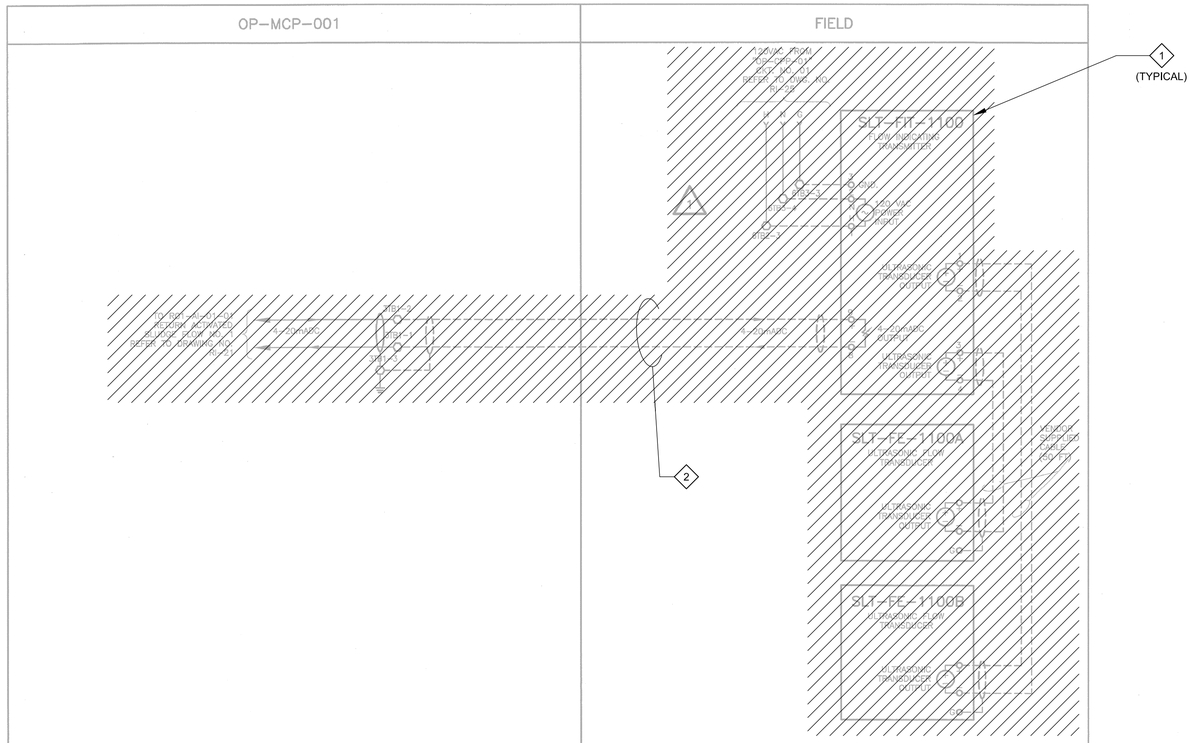

KEY NOTES

1. DISCONNECT AND REMOVE FLOW INDICATING TRANSMITTER, FLOW TRANSDUCERS AND ASSOCIATED INTERCONNECT FIELD WIRING IN THEIR ENTIRETY. COORDINATE WITH PROCESS MECHANICAL PRIOR TO COMMENCING DEMOLITION ACTIVITIES.
2. DISCONNECT AND REMOVE ASSOCIATED FIELD WIRING IN ITS ENTIRETY. REFER TO PLAN DRAWINGS FOR ADDITIONAL INFORMATION.

WIRING AND TERMINAL DEVICE LEGEND:

- DEVICE WIRING TERMINAL
- TERMINAL BLOCK LOCATED IN CONTROL PANEL "OP-MCP-001". ANY DEVICE SHOWN WITH DEVICE WIRING TERMINALS CONNECTED DIRECTLY TO THESE SYMBOLS WITH SOLID LINES IS ALSO LOCATED IN "OP-MCP-001".
- TERMINAL BLOCK LOCATED IN 480 VOLT MOTOR CONTROL CENTER "OP-MCC-01L" OR "OP-MCC-01R" AS APPLICABLE. ANY DEVICE SHOWN WITH DEVICE WIRING TERMINALS CONNECTED DIRECTLY TO THESE SYMBOLS WITH SOLID LINES IS ALSO LOCATED IN "OP-MCC-01L" OR "OP-MCC-01R" AS APPLICABLE.
- TERMINAL BLOCK LOCATED IN FIELD MOUNTED EQUIPMENT AS NOTED. ANY DEVICE SHOWN WITH DEVICE WIRING TERMINALS CONNECTED DIRECTLY TO THESE SYMBOLS WITH SOLID LINES IS LOCATED IN OR ON THE EQUIPMENT.
- – – – FIELD WIRING

GENERAL NOTES:

1. CLOSELY COORDINATE INSTALLATION/LOCATION WITH MECHANICAL.
2. REFER TO PLANS FOR APPROXIMATE LOCATION/MOUNTING DETAILS/ETC., OF THE PROPOSED EQUIPMENT SHOWN HEREIN.

REFERENCE DRAWINGS:

RI-21 – PLC I/O WIRING SCHEMATICS

NOTE: THIS DRAWING IS TYPICAL FOR FUTURE FLOW INDICATING TRANSMITTER "SLT-FIT-1101" AND CORRESPONDING FUTURE FLOW ELEMENTS "SLT-FIT-1101A" AND "SLT-FIT-1101B". FUTURE FLOW INDICATING TRANSMITTER "SLT-FIT-1101" AND CORRESPONDING FUTURE FLOW ELEMENTS "SLT-FIT-1101A" AND "SLT-FIT-1101B" ARE FURNISHED AND INSTALLED BY OTHERS.

RECORD DRAWING

THIS CONSTRUCTION DOCUMENT WAS PREPARED USING INFORMATION SUPPLIED BY THE CONTRACTOR TO REPRESENT CONSTRUCTION CHANGES. THIS DOCUMENT IS FOR INFORMATION AND REFERENCE IN CONNECTION WITH THE OWNER'S USE AND OCCUPANCY OF THE PROJECT AND IS NOT INTENDED FOR BID, PERMIT OR CONSTRUCTION.

BY: K.A. Harutunian DATE: 1/5/2007

REUSE OF DOCUMENTS
This document and the ideas and designs incorporated herein as an instrument of professional service has been developed, designed and prepared by Harutunian Engineering, Inc. and is not to be used, in whole or part, for any other project without the written authorization of the City of Austin and Harutunian Engineering, Inc. © 2003

HARUTUNIAN ENGINEERING INCORPORATED
ENGINEERING AND ENVIRONMENTAL CONSULTANTS
305 EAST HUNTLAND DRIVE SUITE 300 AUSTIN, TEXAS 78752

NO.	DATE	REVISION	APPROV.
4			
3			
2			
1	1/5/7	RECORD DRAWING	K.A.H.

THE SEAL APPEARING ON THIS DOCUMENT WAS AUTHORIZED BY K. A. HARUTUNIAN, P.E. 59181 ON OCTOBER 16, 2003

WARNING
0 1/2 1
IF THIS BAR DOES NOT MEASURE 1" THEN DRAWING IS NOT TO SCALE

STATE OF TEXAS · K. A. HARUTUNIAN · 59181 · REGISTERED PROFESSIONAL ENGINEER

Dwg. No. RI-4

CITY OF AUSTIN, TEXAS
NORTHEAST INTERIM WASTEWATER TREATMENT PLANT

RETURN ACTIVATED SLUDGE FLOW INSTRUMENT WIRING SCHEMATIC

Turner Collie & Braden Inc.
ENGINEERS • PLANNERS • PROJECT MANAGERS

Unit: PUBLIC WORKS	Scale: NONE	Date: OCTOBER 2003	
Designed: HEI	Checked: HEI	Job No.: 052-122094-0008	
Drawn: HEI	Approved: HEI	Sheet: 256/327	

THIS CONFORMED DOCUMENT IS RELEASED FOR THE CONVENIENCE OF THE CONTRACTOR UNDER THE AUTHORITY OF:

K. A. HARUTUNIAN, P.E.
TX LIC NO. 59181

11-01-22
DATE

SEE DISCLAIMER FOR LIMITATIONS OF USE.

CONTRACT DOCUMENTS DATED FEBRUARY 28, 2022, AS PART OF THE BIDDING DOCUMENTS (DRAWINGS AND SPECIFICATIONS) AND SUBSEQUENTLY ISSUED ADDENDA HAVE BEEN MERGED INTO ONE CONFORMING SET OF DOCUMENTS FOR THE CONVENIENCE OF THE CONTRACTOR. IF INCONSISTENCIES OR AMBIGUITIES BETWEEN "CONFORMED" DOCUMENTS AND CONTRACT DOCUMENTS ARE FOUND, THE CONTRACT DOCUMENTS SHALL GOVERN.

This document, and the designs incorporated herein, is an instrument of professional service that has been developed, designed and prepared by Harutunian Engineering, Inc., and is not to be used, in whole or in part, for any other project without giving written notice to Harutunian Engineering, Inc.

REV	DATE	BY	DESCRIPTION
			CONFORMED DOCUMENTS

DESIGNED HEI
DRAWN HEI
CHECKED HEI
DATE NOVEMBER 2022

**
ORIGINAL
SEALED BY
K.A. HARUTUNIAN
02-28-22
TX PE 59181
**

HARUTUNIAN ENGINEERING INCORPORATED
ENGINEERING AND ENVIRONMENTAL CONSULTANTS
8100 CROSS PARK DRIVE
AUSTIN, TEXAS 78754
TBPE REGISTRATION NO. F-2408

carollo
TBPELS No. F-882

CITY OF AUSTIN
FOUNDED 1839

CITY OF AUSTIN

CITY OF AUSTIN
WILD HORSE RANCH WWTP EXPANSION
DEMOLITION
EXISTING RAS PUMP STATION
INSTRUMENT WIRING SCHEMATICS - DEMOLITION - 1

VERIFY SCALES
BAR IS ONE INCH ON ORIGINAL DRAWING
0 1"
IF NOT ONE INCH ON THIS SHEET, ADJUST SCALES ACCORDINGLY

JOB NO. 10976A.00
DRAWING NO. 45DN04
SHEET NO. 150 OF 464

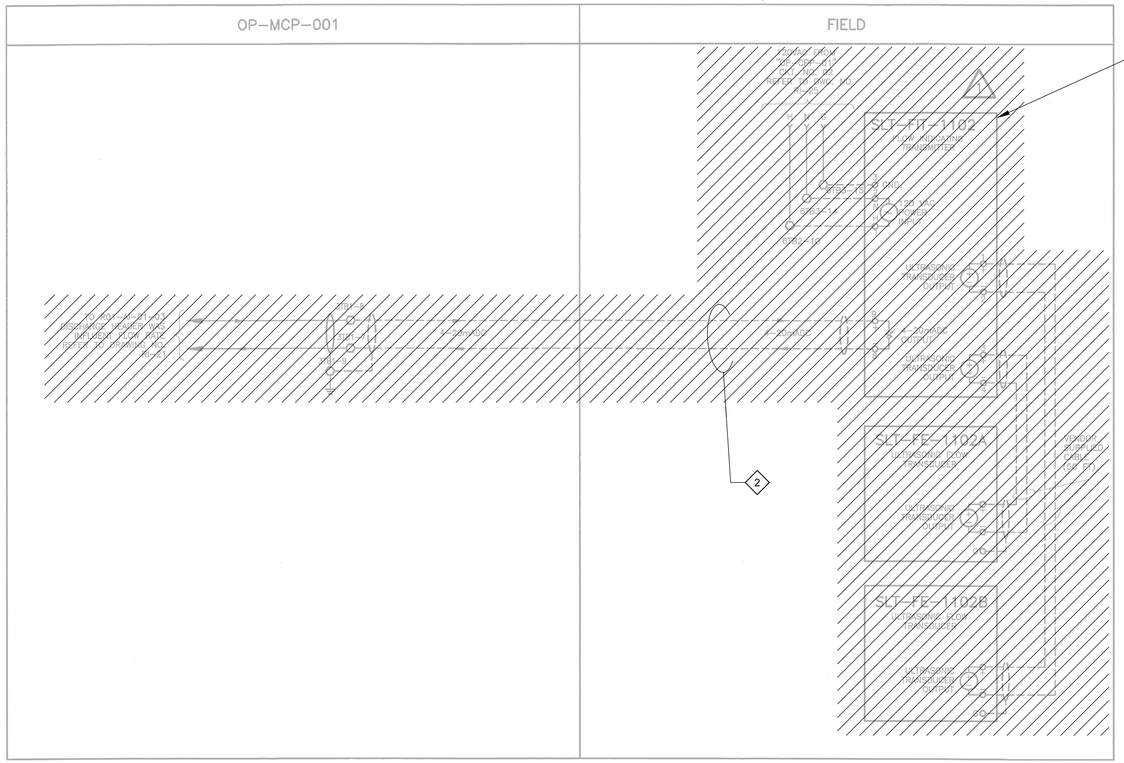

KEY NOTES

1. DISCONNECT AND REMOVE FLOW INDICATING TRANSMITTER, FLOW TRANSDUCERS AND ASSOCIATED INTERCONNECT FIELD WIRING IN THEIR ENTIRETY. COORDINATE WITH PROCESS MECHANICAL PRIOR TO COMMENCING DEMOLITION ACTIVITIES.
2. DISCONNECT AND REMOVE ASSOCIATED FIELD WIRING IN ITS ENTIRETY. REFER TO PLAN DRAWINGS FOR ADDITIONAL INFORMATION.

WIRING AND TERMINAL DEVICE LEGEND:

- DEVICE WIRING TERMINAL
- TERMINAL BLOCK LOCATED IN CONTROL PANEL "OP-MCP-001". ANY DEVICE SHOWN WITH DEVICE WIRING TERMINALS CONNECTED DIRECTLY TO THESE SYMBOLS WITH SOLID LINES IS ALSO LOCATED IN "OP-MCP-001".
- TERMINAL BLOCK LOCATED IN 480 VOLT MOTOR CONTROL CENTER "OP-MCC-01L" OR "OP-MCC-01R" AS APPLICABLE. ANY DEVICE SHOWN WITH DEVICE WIRING TERMINALS CONNECTED DIRECTLY TO THESE SYMBOLS WITH SOLID LINES IS ALSO LOCATED IN "OP-MCC-01L" OR "OP-MCC-01R" AS APPLICABLE.
- TERMINAL BLOCK LOCATED IN FIELD MOUNTED EQUIPMENT AS NOTED. ANY DEVICE SHOWN WITH DEVICE WIRING TERMINALS CONNECTED DIRECTLY TO THESE SYMBOLS WITH SOLID LINES IS LOCATED IN OR ON THE EQUIPMENT.
- FIELD WIRING

GENERAL NOTES:

1. CLOSELY COORDINATE INSTALLATION/LOCATION WITH MECHANICAL.
2. REFER TO PLANS FOR APPROXIMATE LOCATION/MOUNTING DETAILS/ETC., OF THE PROPOSED EQUIPMENT SHOWN HEREIN.

REFERENCE DRAWINGS:

RI-21 - PLC I/O WIRING SCHEMATICS

RECORD DRAWING

THIS CONSTRUCTION DOCUMENT WAS PREPARED USING INFORMATION SUPPLIED BY THE CONTRACTOR TO REPRESENT CONSTRUCTION CHANGES. THIS DOCUMENT IS FOR INFORMATION AND REFERENCE IN CONNECTION WITH THE OWNER'S USE AND OCCUPANCY OF THE PROJECT AND IS NOT INTENDED FOR BID, PERMIT OR CONSTRUCTION.

BY: K.A. Harutunian DATE: 1/5/2007

REUSE OF DOCUMENTS
This document and the ideas and designs incorporated herein as an instrument of professional service has been developed, designed and prepared by Harutunian Engineering, Inc. and is not to be used, in whole or part, for any other project without the written authorization of the City of Austin and Harutunian Engineering, Inc. © 2003

HARUTUNIAN ENGINEERING INCORPORATED
ENGINEERING AND ENVIRONMENTAL CONSULTANTS
305 EAST HUNTLAND DRIVE SUITE 300 AUSTIN, TEXAS 78752

NO.	DATE	REVISION	APPROV.
4			
3			
2			
1	1/5/7	RECORD DRAWING	K.A.H.

THE SEAL APPEARING ON THIS DOCUMENT WAS AUTHORIZED BY K. A. HARUTUNIAN, P.E. 59181 ON OCTOBER 16, 2003

WARNING
0 1/2 1
IF THIS BAR DOES NOT MEASURE 1" THEN DRAWING IS NOT TO SCALE

STATE OF TEXAS · K. A. HARUTUNIAN · 59181 · REGISTERED PROFESSIONAL ENGINEER

Dwg. No. RI-5

CITY OF AUSTIN, TEXAS
NORTHEAST INTERIM WASTEWATER TREATMENT PLANT

WASTE ACTIVATED SLUDGE FLOW INSTRUMENT WIRING SCHEMATIC

Turner Collie & Braden Inc.
ENGINEERS • PLANNERS • PROJECT MANAGERS

Unit PUBLIC WORKS	Scale NONE	Date OCTOBER 2003	
Designed HEI	Checked HEI	Job No. 052-122094-0008	
Drawn HEI	Approved HEI	Sheet 257/327	

THIS CONFORMED DOCUMENT IS RELEASED FOR THE CONVENIENCE OF THE CONTRACTOR UNDER THE AUTHORITY OF:

K. A. HARUTUNIAN, P.E. 11-01-22
TX LIC NO. 59181 DATE

SEE DISCLAIMER FOR LIMITATIONS OF USE.

CONTRACT DOCUMENTS DATED FEBRUARY 28, 2022, AS PART OF THE BIDDING DOCUMENTS (DRAWINGS AND SPECIFICATIONS) AND SUBSEQUENTLY ISSUED ADDENDA HAVE BEEN MERGED INTO ONE CONFORMING SET OF DOCUMENTS FOR THE CONVENIENCE OF THE CONTRACTOR. IF INCONSISTENCIES OR AMBIGUITIES BETWEEN "CONFORMED" DOCUMENTS AND CONTRACT DOCUMENTS ARE FOUND, THE CONTRACT DOCUMENTS SHALL GOVERN.

This document, and the designs incorporated herein, is an instrument of professional service that has been developed, designed and prepared by Harutunian Engineering, Inc., and is not to be used, in whole or in part, for any other project without giving written notice to Harutunian Engineering, Inc.

REV	DATE	BY	DESCRIPTION
			CONFORMED DOCUMENTS

DESIGNED HEI
DRAWN HEI
CHECKED HEI
DATE NOVEMBER 2022

** ORIGINAL SEALED BY K.A. HARUTUNIAN 02-28-22 TX PE 59181 **

HARUTUNIAN ENGINEERING INCORPORATED
ENGINEERING AND ENVIRONMENTAL CONSULTANTS
8100 CROSS PARK DRIVE AUSTIN, TEXAS 78754
TBPE REGISTRATION NO. F-2408

carollo
TBPELS No. F-882

CITY OF AUSTIN
FOUNDED 1839
CITY OF AUSTIN

CITY OF AUSTIN
WILD HORSE RANCH WWTP EXPANSION
DEMOLITION
EXISTING RAS PUMP STATION
INSTRUMENT WIRING SCHEMATICS - DEMOLITION - 2

VERIFY SCALES
BAR IS ONE INCH ON ORIGINAL DRAWING
0 1"
IF NOT ONE INCH ON THIS SHEET, ADJUST SCALES ACCORDINGLY

JOB NO. 10976A.00
DRAWING NO. 45DN05
SHEET NO. 151 OF 464

Plot Date: 10-OCT-2022 10:36:06 AM
User: LDietzel
PlotScale: 1:1
DesignScript: Carollo_Std_Pen_v0905.pen
ColorTable: gshade.ctb
Model: Layout1
LAST SAVED BY: ldietzel

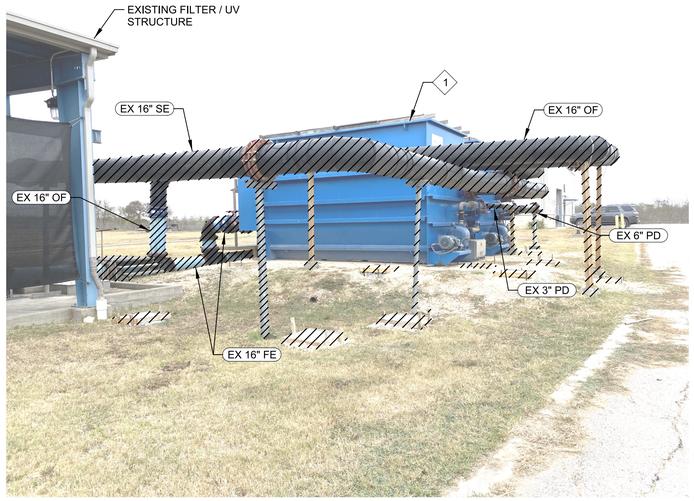

1 SOUTHWEST VIEW OF EXISTING FILTER PIPING
SCALE: NTS
FILE: FILE

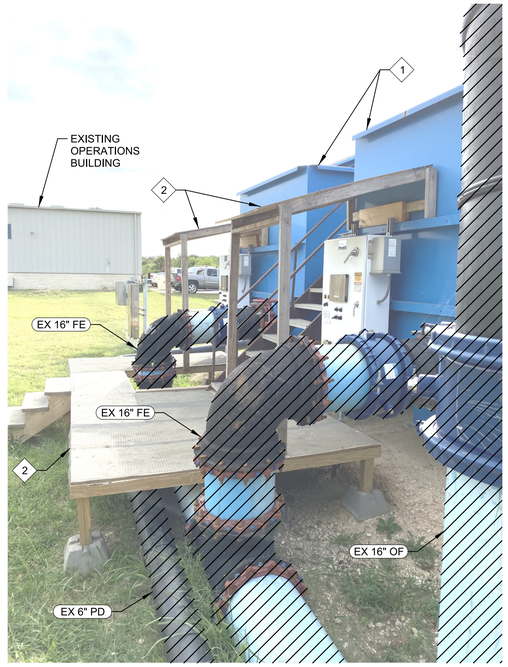

2 NORTHWEST VIEW OF EXISTING FILTER PIPING
SCALE: NTS
FILE: FILE

3 SOUTH VIEW OF EXISTING FILTER PIPING
SCALE: NTS
FILE: FILE

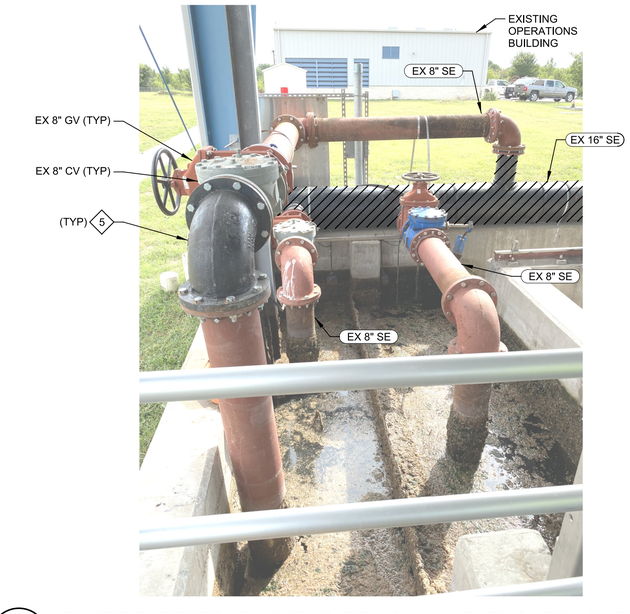

4 FILTER FEED PUMP DETAILS AT EXISTING FILTER STRUCTURE
SCALE: NTS
FILE: FILE

GENERAL NOTES:

1. CONTRACTOR SHALL FIELD VERIFY EXISTING CONDITIONS PRIOR TO STARTING WORK.
2. PLANT FILTRATION CAPABILITIES ARE TO BE MAINTAINED THROUGHOUT CONSTRUCTION. ANY PROCESS SHUTDOWNS ARE TO BE APPROVED BY OWNER. REFER TO SPECIFICATION 01140 - WORK RESTRICTIONS FOR SHUTDOWN REQUIREMENTS.

KEY NOTES:

1 FILTERS TO BE RELOCATED. REFER TO 50D02 FOR DETAILS.

2 PRESERVE TEMPORARY SUNSHADE AND PLATFORM AND REUSE AT TEMPORARY FILTER LOCATION UNTIL FILTERS ARE PERMANENTLY INSTALLED. DISPOSE OF SUNSHADE AND PLATFORM PER SPECIFICATIONS AFTER FILTERS ARE PERMANENTLY INSTALLED.

3 CLOSE VALVE CONNECTING PIPING TO THE FILTERS TO FACILITATE MOVING ONE FILTER WHILE THE OTHER REMAINS IN SERVICE. TYPICAL FOR INFLUENT, EFFLUENT, OVERFLOW, AND BACKWASH VALVES. INSTALL TEMPORARY PIPE SUPPORTS AT ALL FOUR VALVES AS APPROPRIATE TO ALLOW PIPE TO REMAIN IN SERVICE AFTER FILTER IS MOVED.

4 REMOVE HDPE PIPE UP TO BACKWASH PUMP DISCHARGE FLANGE. CONNECT NEW PD PIPING TO FLANGE AT TEMPORARY FILTER LOCATION.

5 PRESERVE AND REUSE PUMP DISCHARGE PIPING, CHECK VALVE, AND GATE VALVE WHEN CONNECTING TO NEW TEMPORARY FILTER FEED PIPING.

THIS CONFORMED DOCUMENT IS RELEASED FOR THE CONVENIENCE OF THE CONTRACTOR UNDER THE AUTHORITY OF:

DANNY M HURTADO, P.E.
TX LIC NO. 104266

11-01-22
DATE

SEE DISCLAIMER FOR LIMITATIONS OF USE.

CONTRACT DOCUMENTS DATED JUNE 10, 2022, AS PART OF THE BIDDING DOCUMENTS (DRAWINGS AND SPECIFICATIONS) AND SUBSEQUENTLY ISSUED ADDENDA HAVE BEEN MERGED INTO ONE CONFORMING SET OF DOCUMENTS FOR THE CONVENIENCE OF THE CONTRACTOR. IF INCONSISTENCIES OR AMBIGUITIES BETWEEN "CONFORMED" DOCUMENTS AND CONTRACT DOCUMENTS ARE FOUND, THE CONTRACT DOCUMENTS SHALL GOVERN.

REV	DATE	BY	DESCRIPTION
			CONFORMED DOCUMENTS

DESIGNED JPH
DRAWN LZV
CHECKED DMH
DATE NOVEMBER 2022

** ORIGINAL SEALED BY DANNY M. HURTADO 06-10-22 TX PE 104266 **

carollo®
TBPELS No. F-882

CITY OF AUSTIN
FOUNDED 1839

CITY OF AUSTIN

CITY OF AUSTIN
WILD HORSE RANCH WWTP EXPANSION
DEMOLITION
EXISTING DISK FILTER RELOCATION - DETAILS

VERIFY SCALES
BAR IS ONE INCH ON ORIGINAL DRAWING
0 1"
IF NOT ONE INCH ON THIS SHEET, ADJUST SCALES ACCORDINGLY

JOB NO. 10976A.00
DRAWING NO. 50D01
SHEET NO. 152 OF 464

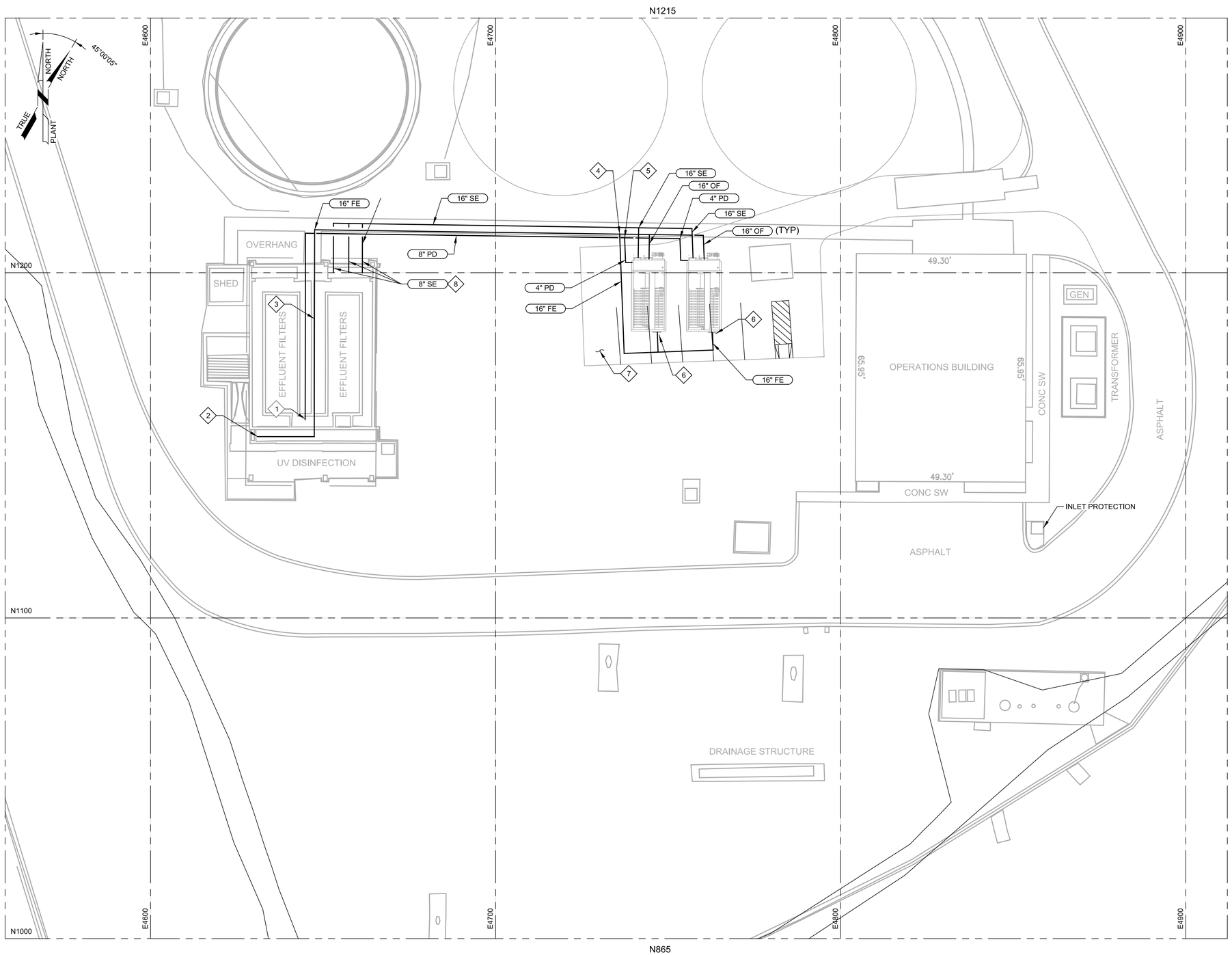

GENERAL NOTES:

1. CONTRACTOR SHALL FIELD VERIFY EXISTING CONDITIONS PRIOR TO STARTING WORK.
2. PLANT FILTRATION CAPABILITIES ARE TO BE MAINTAINED THROUGHOUT CONSTRUCTION. ANY PROCESS SHUTDOWNS ARE TO BE APPROVED BY OWNER. REFER TO SPECIFICATION 01140 - WORK RESTRICTIONS FOR SHUTDOWN REQUIREMENTS.
3. PIPING SHOWN ON THIS SHEET IS TEMPORARY AND SHALL BE RUN ABOVE GROUND. PROVIDE TEMPORARY SUPPORTS FOR PIPING AS NEEDED. TEMPORARY PIPING SHALL BE HDPE OR PVC (MINIMUM PRESSURE RATING 50 PSI) WITH RESTRAINED JOINTS. (1)
4. THE FILTERS SHOWN ON THIS SHEET ARE EXISTING AND ARE BEING MOVED FROM THEIR CURRENT LOCATION. FOR CURRENT LOCATION OF THE FILTERS ON THE PLANT SITE, REFER TO 01D03.
5. THE INSTALLATION ON THIS SHEET IS TEMPORARY. THE PERMANENT FILTER INSTALLATION IS SHOWN ON SHEET 50M01.

(#) KEY NOTES:

1 FILTER BACKWASH TO DISCHARGE IN EXISTING WASTE BACKWASH WELL SIMILAR TO EXISTING CONFIGURATION.

2 FE PIPE TO DISCHARGE AT EXISTING FILTER EFFLUENT DISCHARGE LOCATION SIMILAR TO EXISTING CONFIGURATION.

3 ROUTE FE AND PD PIPES ON EXISTING WALKWAY.

4 16" OF TO DISCHARGE INTO 16" FE PIPE WITH TEE.

5 COMBINE FILTER BACKWASH PIPES WITH 4" X 8" REDUCERS AND 8" X 8" TEE.

(1) 6 REINSTALL EXISTING BUTTERFLY VALVES ON FILTER INFLUENT, EFFLUENT, OVERFLOW, AND FILTER BACKWASH FLANGES.

7 PLACE FILTERS SUCH THAT HVAC PAD CAN BE CONSTRUCTED BEFORE FILTER IS PLACED IN PERMANENT LOCATION. REFER TO 01C01 FOR HVAC PAD LOCATION.

8 EXISTING FILTER FEED PUMPS TO BE REUSED. PUMP DISCHARGE PIPING AND FITTINGS TO BE MODIFIED TO DISCHARGE TO THE NORTH.

THIS CONFORMED DOCUMENT IS RELEASED FOR THE CONVENIENCE OF THE CONTRACTOR UNDER THE AUTHORITY OF:

DANNY M HURTADO, P.E.
TX LIC NO. 104266

11-01-22
DATE

SEE DISCLAIMER FOR LIMITATIONS OF USE.

CONTRACT DOCUMENTS DATED JUNE 10, 2022, AS PART OF THE BIDDING DOCUMENTS (DRAWINGS AND SPECIFICATIONS) AND SUBSEQUENTLY ISSUED ADDENDA HAVE BEEN MERGED INTO ONE CONFORMING SET OF DOCUMENTS FOR THE CONVENIENCE OF THE CONTRACTOR. IF INCONSISTENCIES OR AMBIGUITIES BETWEEN "CONFORMED" DOCUMENTS AND CONTRACT DOCUMENTS ARE FOUND, THE CONTRACT DOCUMENTS SHALL GOVERN.

CONFORMED DOCUMENTS

REV	DATE	BY	DESCRIPTION
(1)	09-06-22	DMH	ADDENDUM NO. 4

DESIGNED JPH
DRAWN LZV
CHECKED DMH
DATE NOVEMBER 2022

** ORIGINAL SEALED BY DANNY M. HURTADO 06-10-22 TX PE 104266 **

carollo®
TBPELS No. F-882

CITY OF AUSTIN

CITY OF AUSTIN
WILD HORSE RANCH WWTP EXPANSION
DEMOLITION
EXISTING DISK FILTER RELOCATION - PLAN

VERIFY SCALES
BAR IS ONE INCH ON ORIGINAL DRAWING
0 1"
IF NOT ONE INCH ON THIS SHEET, ADJUST SCALES ACCORDINGLY

JOB NO. 10976A.00
DRAWING NO. 50D02
SHEET NO. 153 OF 464

PROJECT NO. 10976A10 FILE NAME: 10976A1050D02.dgn

Plot Date: 10-OCT-2022 10:38:48 AM
User: LDietzel
DesignScript: Carollo_Std_Pen_v0905.pen
ColorTable: gshade.ctb
Model: Layout1
PlotScale: 1:1
LAST SAVED BY: ldietzel

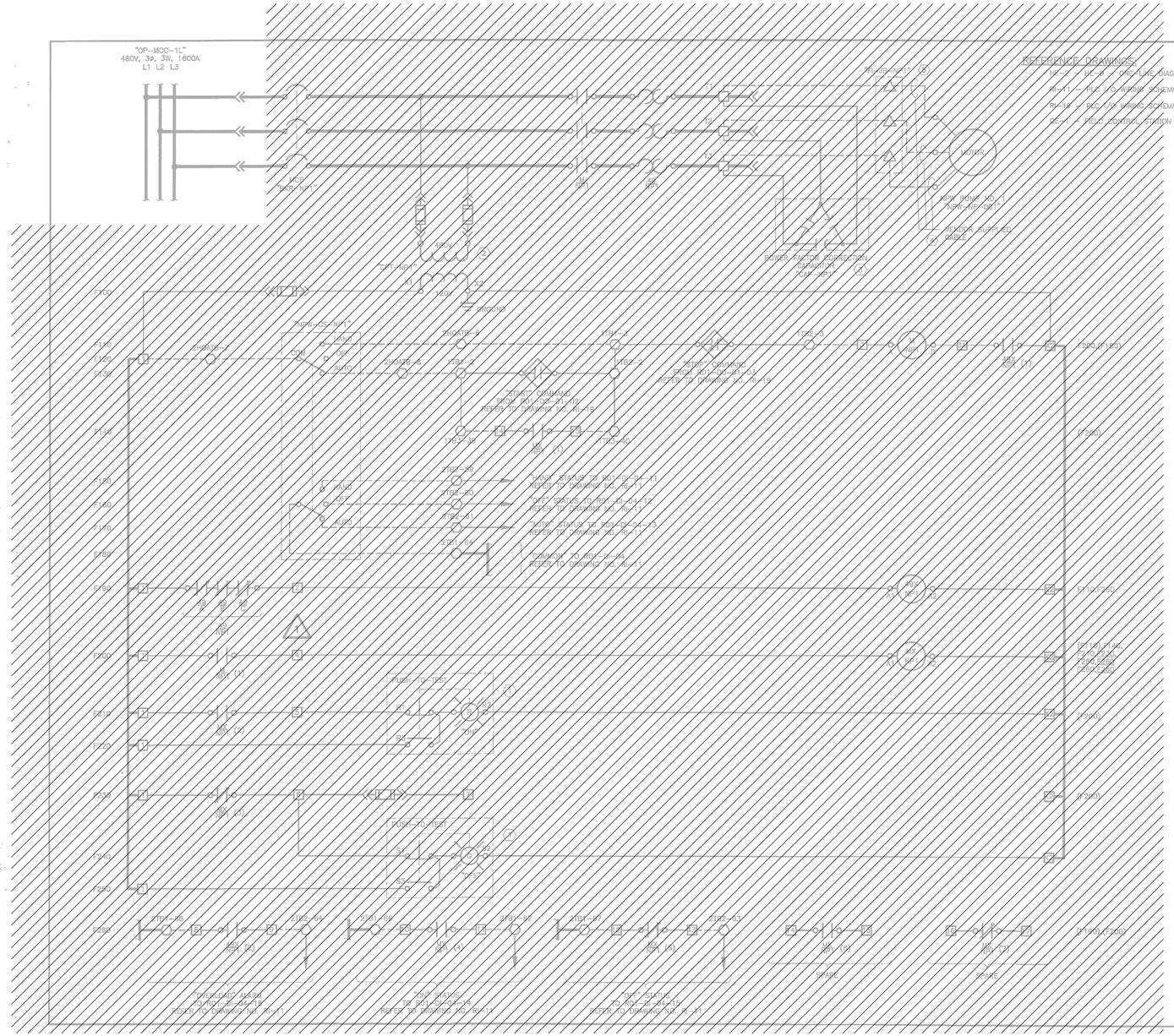

REFERENCE DRAWINGS:

- RE-2 – MCC & VFD ONE-LINE DIAGRAMS
- RI-11 – PLC I/O WIRING SCHEMATICS
- RI-19 – PLC I/O WIRING SCHEMATICS
- RE-1 – FIELD CONTROL STATION FRONT ELEVATION

WIRING AND TERMINAL DEVICE LEGEND:

- ○ DEVICE WIRING TERMINAL
- ⬡ TERMINAL BLOCK LOCATED IN CONTROL PANEL "OP-MCP-001". ANY DEVICE SHOWN WITH DEVICE WIRING TERMINALS CONNECTED DIRECTLY TO THESE SYMBOLS WITH SOLID LINES IS ALSO LOCATED IN "OP-MCP-001".
- □ TERMINAL BLOCK LOCATED IN 480 VOLT MOTOR CONTROL CENTER "OP-MCC-01L" OR "OP-MCC-01R" AS APPLICABLE. ANY DEVICE SHOWN WITH DEVICE WIRING TERMINALS CONNECTED DIRECTLY TO THESE SYMBOLS WITH SOLID LINES IS ALSO LOCATED IN "OP-MCC-01L" OR "OP-MCC-01R" AS APPLICABLE.
- △ TERMINAL BLOCK LOCATED IN FIELD MOUNTED EQUIPMENT AS NOTED. ANY DEVICE SHOWN WITH DEVICE WIRING TERMINALS CONNECTED DIRECTLY TO THESE SYMBOLS WITH SOLID LINES IS LOCATED IN OR ON THE EQUIPMENT.
- – – – FIELD WIRING

KEY NOTES:

1. MOUNTED TO FRONT OF PROPOSED 480V MOTOR CONTROL CENTER. INDICATING PILOT LIGHT WITH INTEGRAL MOMENTARY ACTION "PUSH-TO-TEST" PUSH BUTTON. REFER TO ELECTRICAL SPECIFICATIONS.
2. CONTROL POWER TRANSFORMER SHALL HAVE MINIMUM RATING OF 200VA. TRANSFORMER SHALL BE SIZED ACCORDING TO ELECTRICAL SPECIFICATIONS.
3. THREE PHASE POWER FACTOR CORRECTION CAPACITOR BANK RATED 480V, 3 PHASE.
4. CLOSELY AND CAREFULLY COORDINATE CABLE LENGTH WITH THE PLANS AND THE EQUIPMENT MANUFACTURER AND MAKE ALL FINAL CONNECTIONS.
5. FURNISH AND INSTALL TERMINAL JUNCTION BOX COMPLETE WITH POWER TERMINAL BLOCKS AND ALL RELATED MOUNTING HARDWARE FOR TERMINATING PROPOSED PUMP WIRING AND MAKE ALL FINAL CONNECTIONS. ALSO REFER TO PLANS FOR ADDITIONAL INFORMATION.

CONTROL LOGIC DEVICE LEGEND:

- M MOTOR RELAY
- 49X OVERLOAD AUXILIARY RELAY
- MX MOTOR CONTACTOR AUXILIARY RELAY

GENERAL NOTES:

1. DISCONNECT AND REMOVE EXISTING MCC MOTOR STARTER BUCKET, ASSOCIATED INTERCONNECT WIRING, FIELD WIRING, FIELD DEVICES, ETC. IN THEIR ENTIRETY. REFER TO ONE-LINES, ELEVATIONS AND PLAN DRAWINGS FOR ADDITIONAL INFORMATION.
2. DISCONNECT AND REMOVE THE EXISTING MAIN CONTROL PANEL INSTRUMENTATION AND CONTROL EQUIPMENT (I.E. TERMINAL BLOCKS, INTERCONNECT WIRING, CONTROL DEVICES, ETC.) IN THEIR ENTIRETY.
3. COORDINATE THE REQUIREMENTS OF THE DEMOLITION/RENOVATION DRAWINGS WITH THE EXISTING MOTOR CONTROL CENTER MANUFACTURER PRIOR TO PERFORMING ANY DEMOLITION ACTIVITIES.
4. COORDINATE THE DEMOLITION OF THE MOTOR WITH PROCESS MECHANICAL.

RECORD DRAWING

THIS CONSTRUCTION DOCUMENT WAS PREPARED USING INFORMATION SUPPLIED BY THE CONTRACTOR TO REPRESENT CONSTRUCTION CHANGES. THIS DOCUMENT IS FOR INFORMATION AND REFERENCE IN CONNECTION WITH THE OWNER'S USE AND OCCUPANCY OF THE PROJECT AND IS NOT INTENDED FOR BID, PERMIT OR CONSTRUCTION.

BY: K.A. Harutunian DATE: 1/5/2007

REUSE OF DOCUMENTS
This document and the ideas and designs incorporated herein as an instrument of professional service has been developed, designed and prepared by Harutunian Engineering, Inc. and is not to be used, in whole or part, for any other project without the written authorization of the City of Austin and Harutunian Engineering, Inc. © 2003

HARUTUNIAN ENGINEERING INCORPORATED
ENGINEERING AND ENVIRONMENTAL CONSULTANTS
305 EAST HANDLERS DRIVE SUITE 200 AUSTIN, TEXAS 78752

NO.	DATE	REVISION	APPROV.
4			
5			
6			
7	1/5/7	RECORD DRAWING	K.A.H.

THE SEAL APPEARING ON THIS DOCUMENT WAS AUTHORIZED BY K. A. HARUTUNIAN, P.E. 59181 ON OCTOBER 16, 2003

WARNING
0 1/2 1
IF THIS BAR DOES NOT MEASURE 1" THEN DRAWING IS NOT TO SCALE

STATE OF TEXAS · K. A. HARUTUNIAN · 59181 · REGISTERED PROFESSIONAL ENGINEER

Drg. No. RE-10

CITY OF AUSTIN, TEXAS
NORTHEAST INTERIM WASTEWATER TREATMENT PLANT

NPW PUMP "NPW-NP-001"
CONTROL SCHEMATIC (SHEET 1 OF 1)

Turner Collie & Braden Inc.
ENGINEERS + PLANNERS + PROJECT MANAGERS

Unit PUBLIC WORKS	State NONE	Date OCTOBER 2003	
Designed HEI	Checked HEI	Job No. 052-122094-0008	
Drawn HEI	Approved HEI	Sheet 224/327	

THIS CONFORMED DOCUMENT IS RELEASED FOR THE CONVENIENCE OF THE CONTRACTOR UNDER THE AUTHORITY OF:

K. A. HARUTUNIAN, P.E.
TX LIC NO. 59181

11-01-22
DATE

SEE DISCLAIMER FOR LIMITATIONS OF USE.

CONTRACT DOCUMENTS DATED FEBRUARY 28, 2022, AS PART OF THE BIDDING DOCUMENTS (DRAWINGS AND SPECIFICATIONS) AND SUBSEQUENTLY ISSUED ADDENDA HAVE BEEN MERGED INTO ONE CONFORMING SET OF DOCUMENTS FOR THE CONVENIENCE OF THE CONTRACTOR. IF INCONSISTENCIES OR AMBIGUITIES BETWEEN "CONFORMED" DOCUMENTS AND CONTRACT DOCUMENTS ARE FOUND, THE CONTRACT DOCUMENTS SHALL GOVERN.

This document, and the designs incorporated herein, is an instrument of professional service that has been developed, designed and prepared by Harutunian Engineering, Inc., and is not to be used, in whole or in part, for any other project without giving written notice to Harutunian Engineering, Inc.

REV	DATE	BY	DESCRIPTION
			CONFORMED DOCUMENTS

DESIGNED HEI
DRAWN HEI
CHECKED HEI
DATE NOVEMBER 2022

** ORIGINAL SEALED BY K.A. HARUTUNIAN 02-28-22 TX PE 59181 **

HARUTUNIAN ENGINEERING INCORPORATED
ENGINEERING AND ENVIRONMENTAL CONSULTANTS
8100 CROSS PARK DRIVE AUSTIN, TEXAS 78754
TBPE REGISTRATION NO. F-2408

carollo® TBPELS No. F-882

CITY OF AUSTIN

CITY OF AUSTIN
WILD HORSE RANCH WWTP EXPANSION
DEMOLITION
NPW PUMP NO. 1
CONTROL WIRING SCHEMATICS - DEMOLITION

VERIFY SCALES
BAR IS ONE INCH ON ORIGINAL DRAWING
0 1"
IF NOT ONE INCH ON THIS SHEET, ADJUST SCALES ACCORDINGLY

JOB NO. 10976A.00
DRAWING NO. 50DN01
SHEET NO. 154 OF 464

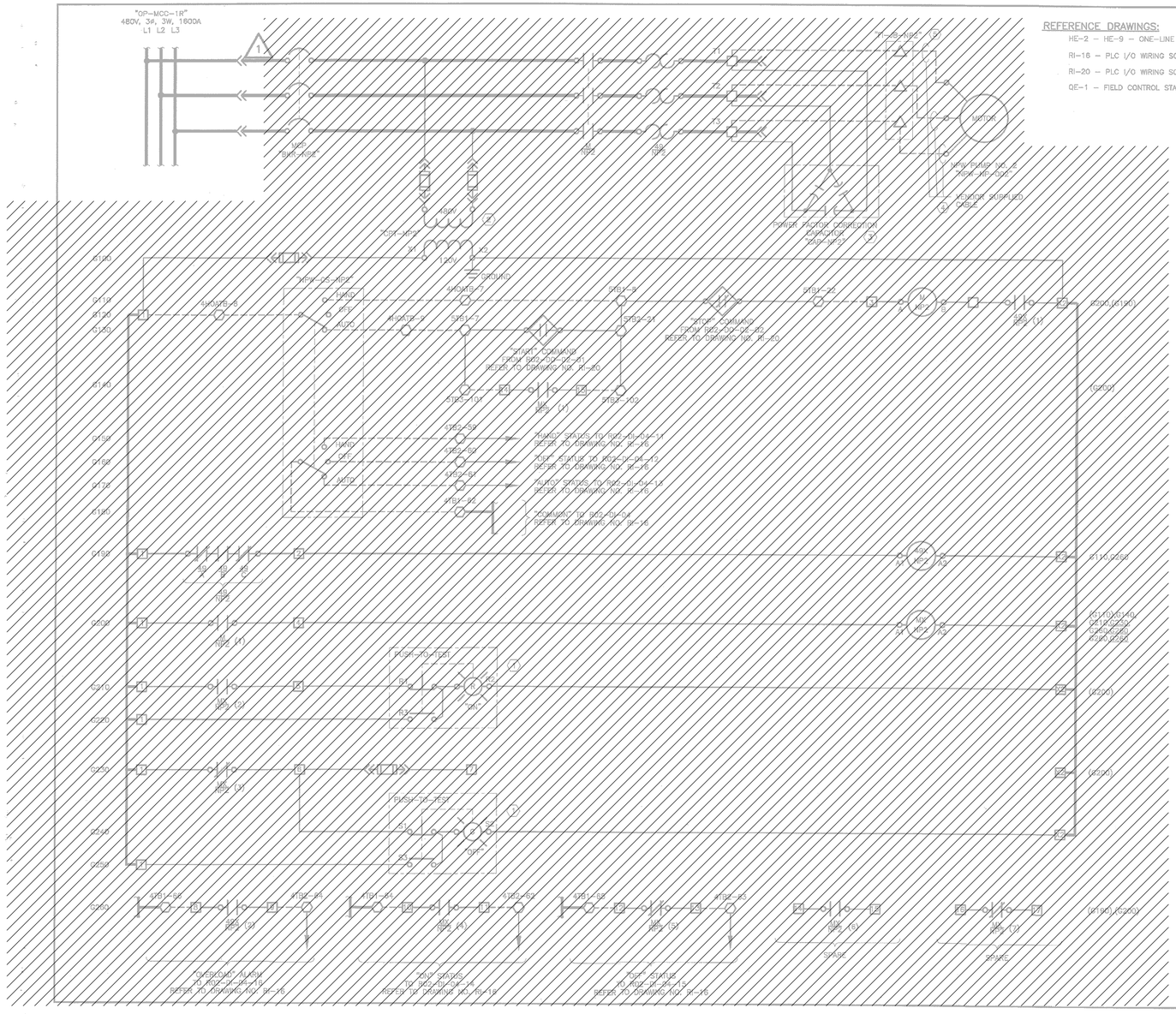
"OP-MCC-1R"
480V, 3Ø, 3W, 1600A
L1 L2 L3
MCP
"BAR-MBR"
"OP-MCC-01R"
480V
"OP-MCC-01L"
POWER FACTOR CORRECTION CAPACITOR "CAP-NPW"
MOTOR
NPW PUMP NO. 2
"NPW-NP-002"
VENDOR SUPPLIED CABLE
MPW-CS-MBR
HAND
OFF
AUTO
4HOATB-8
4HOATB-9
4HOATB-7
4HOATB-6
START COMMAND FROM RR2-01-02-01 REFER TO DRAWING NO. R-20
"STOP" COMMAND FROM RR2-01-02-02 REFER TO DRAWING NO. R-20
"HAND" STATUS TO RR2-01-04-11 REFER TO DRAWING NO. R-16
"OFF" STATUS TO RR2-01-04-10 REFER TO DRAWING NO. R-16
"AUTO" STATUS TO RR2-01-04-12 REFER TO DRAWING NO. R-16
"COMMON" TO RR2-01-04 REFER TO DRAWING NO. R-16
"OVERLOAD" ALARM TO RR2-01-04-19 REFER TO DRAWING NO. R-16
"ON" STATUS TO RR2-01-04-14 REFER TO DRAWING NO. R-16
"OFF" STATUS TO RR2-01-04-13 REFER TO DRAWING NO. R-16
SPARE
PUSH-TO-TEST
"ON"
"OFF"
(6200,6210)
(6200)
(6210)
(6220)
(6230)
(6240)
(6250)
(6260)
(6270)
(6280)
(6290)
(6300)
(6310)
(6320)
(6330)
(6340)
(6350)
(6360)
(6370)
(6380)
(6390)
(6400)
(6410)
(6420)
(6430)
(6440)
(6450)
(6460)
(6470)
(6480)
(6490)
(6500)
(6510)
(6520)
(6530)
(6540)
(6550)
(6560)
(6570)
(6580)
(6590)

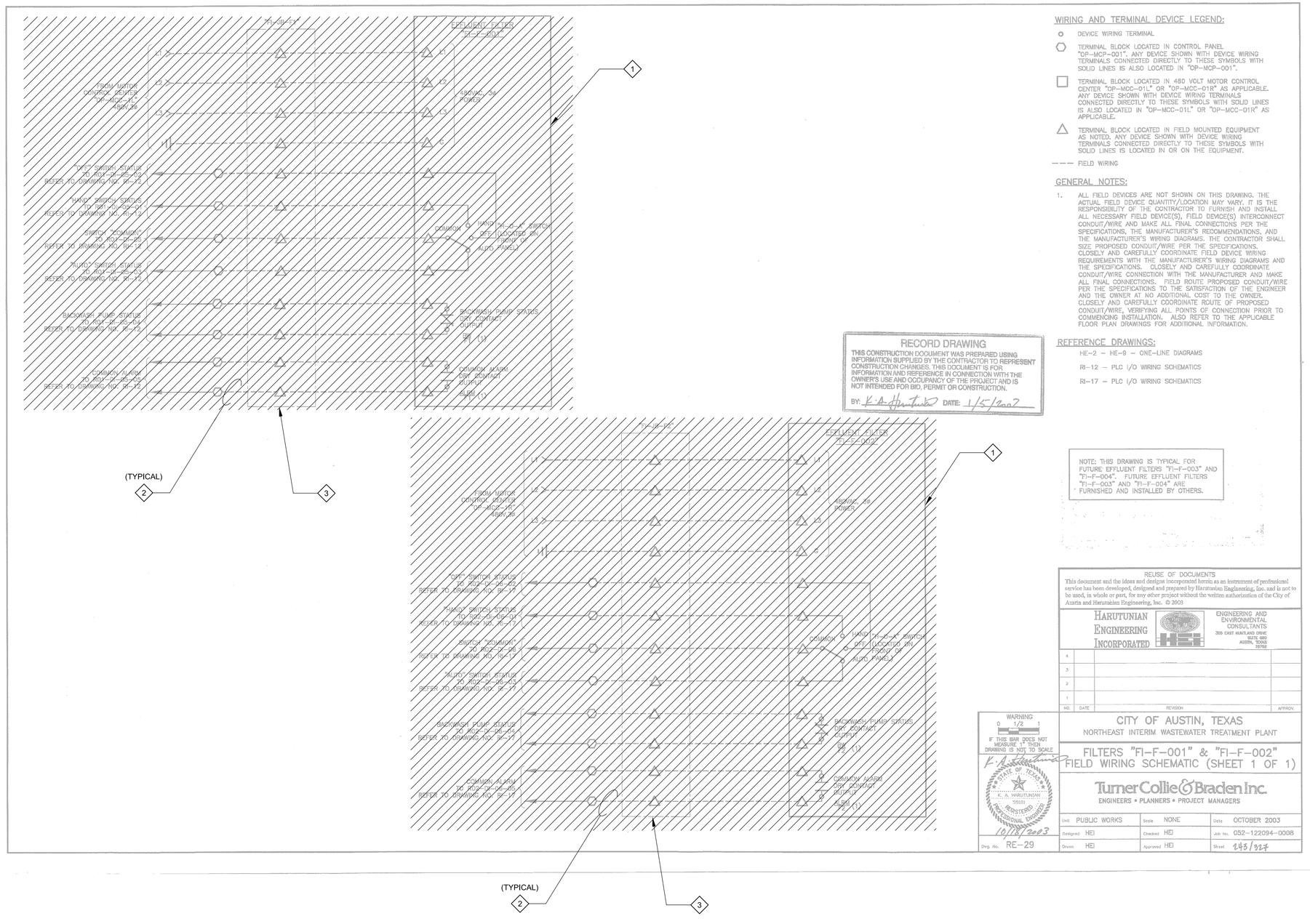

KEY NOTES

1. DISCONNECT AND REMOVE EXISTING CONTROL PANEL AND ASSOCIATED SUB COMPONENTS (I.E. MOTORS, CONTROL DEVICES, ETC.) IN THEIR ENTIRETY. PLEASE BE AWARE THAT NOT ALL SUB-COMPONENTS OF THE SYSTEM HAVE BEEN SHOWN ON THIS DRAWING.
2. DISCONNECT AND REMOVE EXISTING ASSOCIATED FIELD WIRING IN ITS ENTIRETY. REFER TO PLAN DRAWINGS FOR ADDITIONAL INFORMATION.
3. DISCONNECT AND REMOVE EXISTING JUNCTION BOX IN ITS ENTIRETY. REFER TO PLAN DRAWINGS FOR ADDITIONAL INFORMATION.

WIRING AND TERMINAL DEVICE LEGEND:

- ○ DEVICE WIRING TERMINAL
- ⬡ TERMINAL BLOCK LOCATED IN CONTROL PANEL "OP-MCP-001". ANY DEVICE SHOWN WITH DEVICE WIRING TERMINALS CONNECTED DIRECTLY TO THESE SYMBOLS WITH SOLID LINES IS ALSO LOCATED IN "OP-MCP-001".
- □ TERMINAL BLOCK LOCATED IN 480 VOLT MOTOR CONTROL CENTER "OP-MCC-01L" OR "OP-MCC-01R" AS APPLICABLE. ANY DEVICE SHOWN WITH DEVICE WIRING TERMINALS CONNECTED DIRECTLY TO THESE SYMBOLS WITH SOLID LINES IS ALSO LOCATED IN "OP-MCC-01L" OR "OP-MCC-01R" AS APPLICABLE.
- △ TERMINAL BLOCK LOCATED IN FIELD MOUNTED EQUIPMENT AS NOTED. ANY DEVICE SHOWN WITH DEVICE WIRING TERMINALS CONNECTED DIRECTLY TO THESE SYMBOLS WITH SOLID LINES IS LOCATED IN OR ON THE EQUIPMENT.
- ——— FIELD WIRING

GENERAL NOTES:

1. ALL FIELD DEVICES ARE NOT SHOWN ON THIS DRAWING. THE ACTUAL FIELD DEVICE QUANTITY/LOCATION MAY VARY. IT IS THE RESPONSIBILITY OF THE CONTRACTOR TO FURNISH AND INSTALL ALL NECESSARY FIELD DEVICE(S), FIELD DEVICE(S) INTERCONNECT CONDUIT/WIRE AND MAKE ALL FINAL CONNECTIONS PER THE SPECIFICATIONS, THE MANUFACTURER'S RECOMMENDATIONS, AND THE MANUFACTURER'S WIRING DIAGRAMS. THE CONTRACTOR SHALL SIZE PROPOSED CONDUIT/WIRE PER THE SPECIFICATIONS. CLOSELY AND CAREFULLY COORDINATE FIELD DEVICE WIRING REQUIREMENTS WITH THE MANUFACTURER'S WIRING DIAGRAMS AND THE SPECIFICATIONS. CLOSELY AND CAREFULLY COORDINATE CONDUIT/WIRE CONNECTION WITH THE MANUFACTURER AND MAKE ALL FINAL CONNECTIONS. FIELD ROUTE PROPOSED CONDUIT/WIRE PER THE SPECIFICATIONS TO THE SATISFACTION OF THE ENGINEER AND THE OWNER AT NO ADDITIONAL COST TO THE OWNER. CLOSELY AND CAREFULLY COORDINATE ROUTE OF PROPOSED CONDUIT/WIRE, VERIFYING ALL POINTS OF CONNECTION PRIOR TO COMMENCING INSTALLATION. ALSO REFER TO THE APPLICABLE FLOOR PLAN DRAWINGS FOR ADDITIONAL INFORMATION.

REFERENCE DRAWINGS:

HE-2 – HE-9 – ONE-LINE DIAGRAMS

RI-12 – PLC I/O WIRING SCHEMATICS

RI-17 – PLC I/O WIRING SCHEMATICS

RECORD DRAWING
THIS CONSTRUCTION DOCUMENT WAS PREPARED USING INFORMATION SUPPLIED BY THE CONTRACTOR TO REPRESENT CONSTRUCTION CHANGES. THIS DOCUMENT IS FOR INFORMATION AND REFERENCE IN CONNECTION WITH THE OWNER'S USE AND OCCUPANCY OF THE PROJECT AND IS NOT INTENDED FOR BID, PERMIT OR CONSTRUCTION.
BY: K.A. Harutunian DATE: 1/5/2007

NOTE: THIS DRAWING IS TYPICAL FOR FUTURE EFFLUENT FILTERS "FI-F-003" AND "FI-F-004". FUTURE EFFLUENT FILTERS "FI-F-003" AND "FI-F-004" ARE FURNISHED AND INSTALLED BY OTHERS.

REUSE OF DOCUMENTS
This document and the ideas and designs incorporated herein as an instrument of professional service has been developed, designed and prepared by Harutunian Engineering, Inc. and is not to be used, in whole or part, for any other project without the written authorization of the City of Austin and Harutunian Engineering, Inc. © 2003

HARUTUNIAN ENGINEERING INCORPORATED
ENGINEERING AND ENVIRONMENTAL CONSULTANTS
309 EAST HUNTLAND DRIVE, SUITE 600, AUSTIN, TEXAS 78752

NO.	DATE	REVISION	APPROV.
4			
3			
2			
1			

WARNING
0 1/2 1
IF THIS BAR DOES NOT MEASURE 1" THEN DRAWING IS NOT TO SCALE

K. A. HARUTUNIAN 79181 REGISTERED PROFESSIONAL ENGINEER STATE OF TEXAS
10/17/2003

CITY OF AUSTIN, TEXAS
NORTHEAST INTERIM WASTEWATER TREATMENT PLANT
FILTERS "FI-F-001" & "FI-F-002"
FIELD WIRING SCHEMATIC (SHEET 1 OF 1)

Turner Collie & Braden Inc.
ENGINEERS • PLANNERS • PROJECT MANAGERS

Unit PUBLIC WORKS	Scale NONE	Date OCTOBER 2003	
Designed HEI	Checked HEI	Job No. 052-122094-0008	
Dwg. No. RE-29	Drawn HEI	Approved HEI	Sheet 245/327

THIS CONFORMED DOCUMENT IS RELEASED FOR THE CONVENIENCE OF THE CONTRACTOR UNDER THE AUTHORITY OF:

K. A. HARUTUNIAN, P.E.
TX LIC NO. 59181

11-01-22
DATE

SEE DISCLAIMER FOR LIMITATIONS OF USE.

CONTRACT DOCUMENTS DATED FEBRUARY 28, 2022, AS PART OF THE BIDDING DOCUMENTS (DRAWINGS AND SPECIFICATIONS) AND SUBSEQUENTLY ISSUED ADDENDA HAVE BEEN MERGED INTO ONE CONFORMING SET OF DOCUMENTS FOR THE CONVENIENCE OF THE CONTRACTOR. IF INCONSISTENCIES OR AMBIGUITIES BETWEEN "CONFORMED" DOCUMENTS AND CONTRACT DOCUMENTS ARE FOUND, THE CONTRACT DOCUMENTS SHALL GOVERN.

This document, and the designs incorporated herein, is an instrument of professional service that has been developed, designed and prepared by Harutunian Engineering, Inc., and is not to be used, in whole or in part, for any other project without giving written notice to Harutunian Engineering, Inc.

REV	DATE	BY	DESCRIPTION
			CONFORMED DOCUMENTS

DESIGNED HEI
DRAWN HEI
CHECKED HEI
DATE NOVEMBER 2022

** ORIGINAL SEALED BY K.A. HARUTUNIAN 02-28-22 TX PE 59181 **

HARUTUNIAN ENGINEERING INCORPORATED
ENGINEERING AND ENVIRONMENTAL CONSULTANTS
8100 CROSS PARK DRIVE, AUSTIN, TEXAS 78754
TBPE REGISTRATION NO. F-2408

carollo
TBPELS No. F-882

CITY OF AUSTIN
FOUNDED 1839

CITY OF AUSTIN

CITY OF AUSTIN
WILD HORSE RANCH WWTP EXPANSION
DEMOLITION
FILTER CONTROL PANEL
FIELD INTERFACE WIRING SCHEMATIC - DEMOLITION

VERIFY SCALES
BAR IS ONE INCH ON ORIGINAL DRAWING
0 1"
IF NOT ONE INCH ON THIS SHEET, ADJUST SCALES ACCORDINGLY

JOB NO. 10976A.00
DRAWING NO. 50DN03
SHEET NO. 156 OF 464

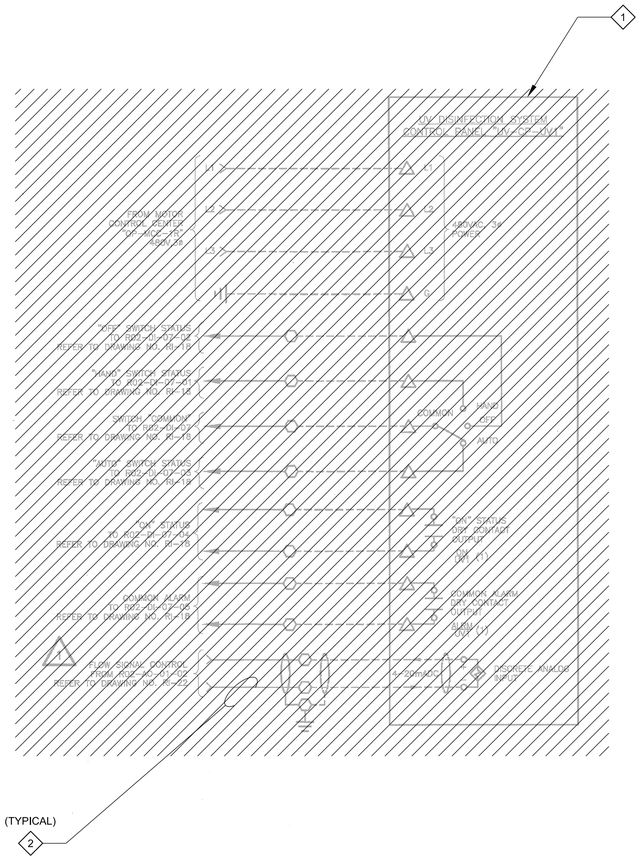

WIRING AND TERMINAL DEVICE LEGEND:

- ○ DEVICE WIRING TERMINAL
- ⬡ TERMINAL BLOCK LOCATED IN CONTROL PANEL "OP-MCP-001". ANY DEVICE SHOWN WITH DEVICE WIRING TERMINALS CONNECTED DIRECTLY TO THESE SYMBOLS WITH SOLID LINES IS ALSO LOCATED IN "OP-MCP-001".
- □ TERMINAL BLOCK LOCATED IN 480 VOLT MOTOR CONTROL CENTER "OP-MCC-01L" OR "OP-MCC-01R" AS APPLICABLE. ANY DEVICE SHOWN WITH DEVICE WIRING TERMINALS CONNECTED DIRECTLY TO THESE SYMBOLS WITH SOLID LINES IS ALSO LOCATED IN "OP-MCC-01L" OR "OP-MCC-01R" AS APPLICABLE.
- △ TERMINAL BLOCK LOCATED IN FIELD MOUNTED EQUIPMENT AS NOTED. ANY DEVICE SHOWN WITH DEVICE WIRING TERMINALS CONNECTED DIRECTLY TO THESE SYMBOLS WITH SOLID LINES IS LOCATED IN OR ON THE EQUIPMENT.
- — — FIELD WIRING

GENERAL NOTES:

1. ALL FIELD DEVICES ARE NOT SHOWN ON THIS DRAWING. THE ACTUAL FIELD DEVICE QUANTITY/LOCATION MAY VARY. IT IS THE RESPONSIBILITY OF THE CONTRACTOR TO FURNISH AND INSTALL ALL NECESSARY FIELD DEVICE(S), FIELD DEVICE(S) INTERCONNECT CONDUIT/WIRE AND MAKE ALL FINAL CONNECTIONS PER THE SPECIFICATIONS, THE MANUFACTURER'S RECOMMENDATIONS, AND THE MANUFACTURER'S WIRING DIAGRAMS. THE CONTRACTOR SHALL SIZE PROPOSED CONDUIT/WIRE PER THE SPECIFICATIONS. CLOSELY AND CAREFULLY COORDINATE FIELD DEVICE WIRING REQUIREMENTS WITH THE MANUFACTURER'S WIRING DIAGRAMS AND THE SPECIFICATIONS. CLOSELY AND CAREFULLY COORDINATE CONDUIT/WIRE CONNECTION WITH THE MANUFACTURER AND MAKE ALL FINAL CONNECTIONS. FIELD ROUTE PROPOSED CONDUIT/WIRE PER THE SPECIFICATIONS TO THE SATISFACTION OF THE ENGINEER AND THE OWNER AT NO ADDITIONAL COST TO THE OWNER. CLOSELY AND CAREFULLY COORDINATE ROUTE OF PROPOSED CONDUIT/WIRE, VERIFYING ALL POINTS OF CONNECTION PRIOR TO COMMENCING INSTALLATION. ALSO REFER TO THE APPLICABLE FLOOR PLAN DRAWINGS FOR ADDITIONAL INFORMATION.

REFERENCE DRAWINGS:

HE-2 – HE-9 – ONE-LINE DIAGRAMS

RI-22 – PLC I/O WIRING SCHEMATICS

RI-18 – PLC I/O WIRING SCHEMATICS

RECORD DRAWING

THIS CONSTRUCTION DOCUMENT WAS PREPARED USING INFORMATION SUPPLIED BY THE CONTRACTOR TO REPRESENT CONSTRUCTION CHANGES. THIS DOCUMENT IS FOR INFORMATION AND REFERENCE IN CONNECTION WITH THE OWNER'S USE AND OCCUPANCY OF THE PROJECT AND IS NOT INTENDED FOR BID, PERMIT OR CONSTRUCTION.

BY: K. A. Harutunian DATE: 1/5/2007

KEY NOTES

1. DISCONNECT AND REMOVE EXISTING CONTROL PANEL AND ASSOCIATED SUB COMPONENTS (I.E. MOTORS, CONTROL DEVICES, ETC.) IN THEIR ENTIRETY. PLEASE BE AWARE THAT NOT ALL SUB-COMPONENTS OF THE SYSTEM HAVE BEEN SHOWN ON THIS DRAWING.
2. DISCONNECT AND REMOVE EXISTING ASSOCIATED FIELD WIRING IN ITS ENTIRETY. REFER TO PLAN DRAWINGS FOR ADDITIONAL INFORMATION.

REUSE OF DOCUMENTS
This document and the ideas and designs incorporated herein as an instrument of professional service has been developed, designed and prepared by Harutunian Engineering, Inc. and is not to be used, in whole or part, for any other project without the written authorization of the City of Austin and Harutunian Engineering, Inc. © 2003

HARUTUNIAN ENGINEERING INCORPORATED
ENGINEERING AND ENVIRONMENTAL CONSULTANTS
205 EAST RIVERLAND DRIVE SUITE 600 AUSTIN, TEXAS 78752

NO.	DATE	REVISION	APPROV
4			
3			
2			
1	1/5/7	RECORD DRAWING	K.A.H.

THE SEAL APPEARING ON THIS DOCUMENT WAS AUTHORIZED BY K. A. HARUTUNIAN, P.E. 59181 ON OCTOBER 18, 2003

WARNING
0 1/2 1
IF THIS BAR DOES NOT MEASURE 1" THEN DRAWING IS NOT TO SCALE

STATE OF TEXAS · K. A. HARUTUNIAN · 59181 · REGISTERED · PROFESSIONAL ENGINEER

Dwg. No. RE-30

CITY OF AUSTIN, TEXAS
NORTHEAST INTERIM WASTEWATER TREATMENT PLANT

UV DISINFECTION "UV-UV-001"
FIELD WIRING SCHEMATIC (SHEET 1 OF 1)

Turner Collie & Braden Inc.
ENGINEERS • PLANNERS • PROJECT MANAGERS

Unit PUBLIC WORKS	Scale NONE	Date OCTOBER 2003	
Designed HEI	Checked HEI	Job No. 052-122094-0008	
Drawn HEI	Approved HEI	Sheet 244/327	

THIS CONFORMED DOCUMENT IS RELEASED FOR THE CONVENIENCE OF THE CONTRACTOR UNDER THE AUTHORITY OF:

K. A. HARUTUNIAN, P.E. — 11-01-22 DATE
TX LIC NO. 59181

SEE DISCLAIMER FOR LIMITATIONS OF USE.

CONTRACT DOCUMENTS DATED FEBRUARY 28, 2022, AS PART OF THE BIDDING DOCUMENTS (DRAWINGS AND SPECIFICATIONS) AND SUBSEQUENTLY ISSUED ADDENDA HAVE BEEN MERGED INTO ONE CONFORMING SET OF DOCUMENTS FOR THE CONVENIENCE OF THE CONTRACTOR. IF INCONSISTENCIES OR AMBIGUITIES BETWEEN "CONFORMED" DOCUMENTS AND CONTRACT DOCUMENTS ARE FOUND, THE CONTRACT DOCUMENTS SHALL GOVERN.

This document, and the designs incorporated herein, is an instrument of professional service that has been developed, designed and prepared by Harutunian Engineering, Inc., and is not to be used, in whole or in part, for any other project without giving written notice to Harutunian Engineering, Inc.

REV	DATE	BY	DESCRIPTION
			CONFORMED DOCUMENTS

DESIGNED HEI
DRAWN HEI
CHECKED HEI
DATE NOVEMBER 2022

** ORIGINAL SEALED BY K.A. HARUTUNIAN 02-28-22 TX PE 59181 **

HARUTUNIAN ENGINEERING INCORPORATED
ENGINEERING AND ENVIRONMENTAL CONSULTANTS
8100 CROSS PARK DRIVE AUSTIN, TEXAS 78754 TBPE REGISTRATION NO. F-2408

carollo® TBPELS No. F-882

CITY OF AUSTIN FOUNDED 1839 **CITY OF AUSTIN**

CITY OF AUSTIN
WILD HORSE RANCH WWTP EXPANSION
DEMOLITION
UV SYSTEM CONTROL PANEL
FIELD INTERFACE WIRING SCHEMATIC - DEMOLITION

VERIFY SCALES
BAR IS ONE INCH ON ORIGINAL DRAWING
0 1"
IF NOT ONE INCH ON THIS SHEET, ADJUST SCALES ACCORDINGLY

JOB NO. 10976A.00
DRAWING NO. 50DN04
SHEET NO. 157 OF 464

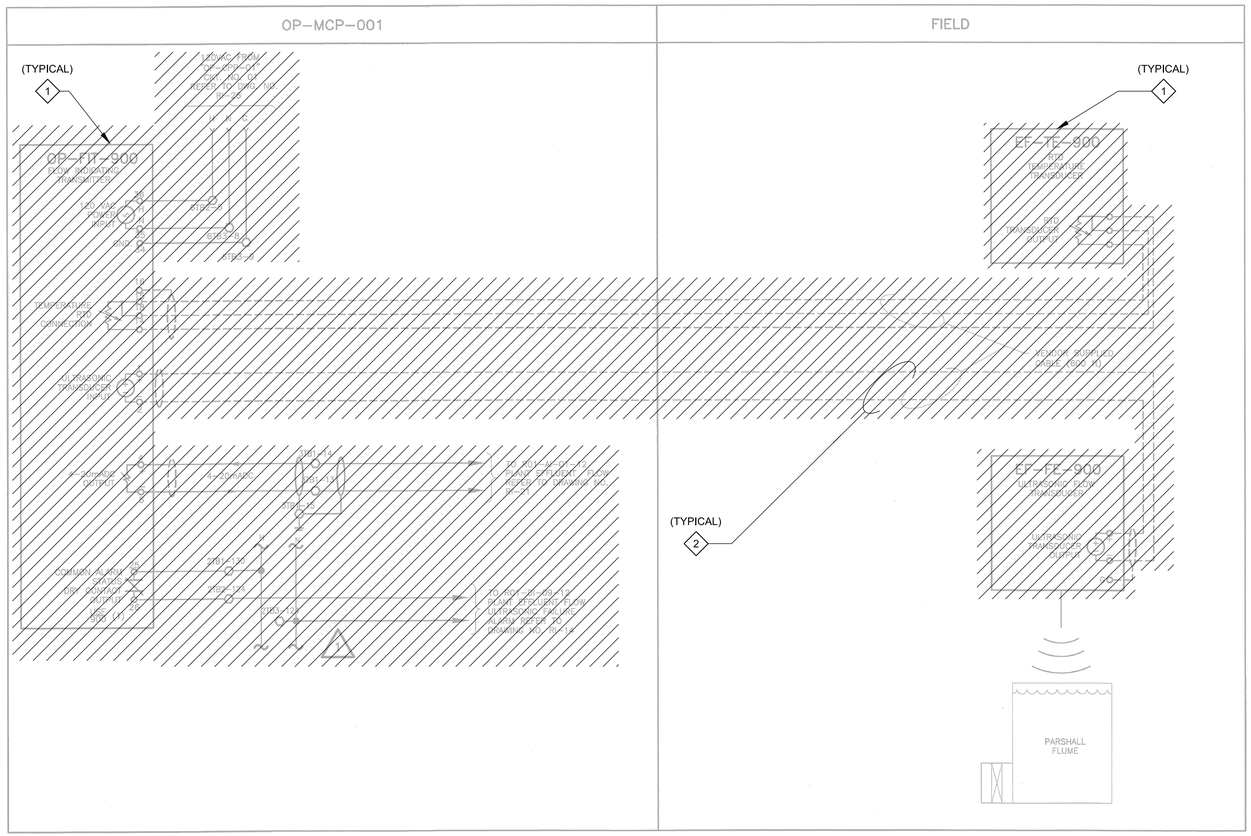

WIRING AND TERMINAL DEVICE LEGEND:

- ○ DEVICE WIRING TERMINAL
- ⬡ TERMINAL BLOCK LOCATED IN CONTROL PANEL "OP-MCP-001". ANY DEVICE SHOWN WITH DEVICE WIRING TERMINALS CONNECTED DIRECTLY TO THESE SYMBOLS WITH SOLID LINES IS ALSO LOCATED IN "OP-MCP-001".
- □ TERMINAL BLOCK LOCATED IN 480 VOLT MOTOR CONTROL CENTER "OP-MCC-01L" OR "OP-MCC-01R" AS APPLICABLE. ANY DEVICE SHOWN WITH DEVICE WIRING TERMINALS CONNECTED DIRECTLY TO THESE SYMBOLS WITH SOLID LINES IS ALSO LOCATED IN "OP-MCC-01L" OR "OP-MCC-01R" AS APPLICABLE.
- △ TERMINAL BLOCK LOCATED IN FIELD MOUNTED EQUIPMENT AS NOTED. ANY DEVICE SHOWN WITH DEVICE WIRING TERMINALS CONNECTED DIRECTLY TO THESE SYMBOLS WITH SOLID LINES IS LOCATED IN OR ON THE EQUIPMENT.
- — — FIELD WIRING

GENERAL NOTES:

1. CLOSELY COORDINATE INSTALLATION/LOCATION WITH MECHANICAL.
2. REFER TO PLANS FOR APPROXIMATE LOCATION/MOUNTING DETAILS/ETC., OF THE PROPOSED EQUIPMENT SHOWN HEREIN.

REFERENCE DRAWINGS:

RI-21 & RI-14 – PLC I/O WIRING SCHEMATICS

RE-37 – OPERATIONS BUILDING PANEL SCHEDULE

RECORD DRAWING

THIS CONSTRUCTION DOCUMENT WAS PREPARED USING INFORMATION SUPPLIED BY THE CONTRACTOR TO REPRESENT CONSTRUCTION CHANGES. THIS DOCUMENT IS FOR INFORMATION AND REFERENCE IN CONNECTION WITH THE OWNER'S USE AND OCCUPANCY OF THE PROJECT AND IS NOT INTENDED FOR BID, PERMIT OR CONSTRUCTION.

BY: K.A. Harutunian DATE: 1/5/2007

KEY NOTES

1. DISCONNECT AND REMOVE FLOW INDICATING TRANSMITTER, FLOW/TEMPERATURE ELEMENTS AND ASSOCIATED INTERCONNECT FIELD WRIING IN THEIR ENTIRETY.
2. DISCONNECT AND REMOVE ASSOCIATED FIELD WIRING IN ITS ENTIRETY. REFER TO PLAN DRAWINGS FOR ADDITIONAL INFORMATION.

REUSE OF DOCUMENTS
This document and the ideas and designs incorporated herein as an instrument of professional service has been developed, designed and prepared by Harutunian Engineering, Inc. and is not to be used, in whole or part, for any other project without the written authorization of the City of Austin and Harutunian Engineering, Inc. © 2003

HARUTUNIAN ENGINEERING INCORPORATED
ENGINEERING AND ENVIRONMENTAL CONSULTANTS
305 EAST HUNTLAND DRIVE SUITE 300
AUSTIN, TEXAS 78752

NO.	DATE	REVISION
4		
3		
2		
1	1/5/7	RECORD DRAWING

THE SEAL APPEARING ON THIS DOCUMENT WAS AUTHORIZED BY K. A. HARUTUNIAN, P.E. 59181 ON OCTOBER 18, 2003

WARNING
0 1/2 1
IF THIS BAR DOES NOT MEASURE 1" THEN DRAWING IS NOT TO SCALE

STATE OF TEXAS · K. A. HARUTUNIAN · 59181 · REGISTERED · PROFESSIONAL ENGINEER

Dwg. No. RI-6

CITY OF AUSTIN, TEXAS
NORTHEAST INTERIM WASTEWATER TREATMENT PLANT

PLANT EFFLUENT FLOW
INSTRUMENT WIRING SCHEMATIC

Turner Collie & Braden Inc.
ENGINEERS • PLANNERS • PROJECT MANAGERS

Unit PUBLIC WORKS	Scale NONE	Date OCTOBER 2003	
Designed HEI	Checked HEI	Job No. 052-122094-0008	
Drawn HEI	Approved HEI	Sheet 258/327	

THIS CONFORMED DOCUMENT IS RELEASED FOR THE CONVENIENCE OF THE CONTRACTOR UNDER THE AUTHORITY OF:

K. A. Harutunian 11-01-22

K. A. HARUTUNIAN, P.E. DATE
TX LIC NO. 59181

SEE DISCLAIMER FOR LIMITATIONS OF USE.

CONTRACT DOCUMENTS DATED FEBRUARY 28, 2022, AS PART OF THE BIDDING DOCUMENTS (DRAWINGS AND SPECIFICATIONS) AND SUBSEQUENTLY ISSUED ADDENDA HAVE BEEN MERGED INTO ONE CONFORMING SET OF DOCUMENTS FOR THE CONVENIENCE OF THE CONTRACTOR. IF INCONSISTENCIES OR AMBIGUITIES BETWEEN "CONFORMED" DOCUMENTS AND CONTRACT DOCUMENTS ARE FOUND, THE CONTRACT DOCUMENTS SHALL GOVERN.

This document, and the designs incorporated herein, is an instrument of professional service that has been developed, designed and prepared by Harutunian Engineering, Inc., and is not to be used, in whole or in part, for any other project without giving written notice to Harutunian Engineering, Inc.

REV	DATE	BY	DESCRIPTION
			CONFORMED DOCUMENTS

DESIGNED HEI
DRAWN HEI
CHECKED HEI
DATE NOVEMBER 2022

** ORIGINAL SEALED BY K.A. HARUTUNIAN 02-28-22 TX PE 59181 **

HARUTUNIAN ENGINEERING INCORPORATED
ENGINEERING AND ENVIRONMENTAL CONSULTANTS
8100 CROSS PARK DRIVE
AUSTIN, TEXAS 78754
TBPE REGISTRATION NO. F-2408

carollo
TBPELS No. F-882

CITY OF AUSTIN
FOUNDED 1839
CITY OF AUSTIN

CITY OF AUSTIN
WILD HORSE RANCH WWTP EXPANSION
DEMOLITION
FILTER COMPLEX INSTRUMENT WIRING SCHEMATICS - DEMOLITION - 1

VERIFY SCALES
BAR IS ONE INCH ON ORIGINAL DRAWING
0 1"
IF NOT ONE INCH ON THIS SHEET, ADJUST SCALES ACCORDINGLY

JOB NO. 10976A.00
DRAWING NO. 50DN05
SHEET NO. 158 OF 464

KEY NOTES

1. DISCONNECT AND REMOVE PRESSURE INDICATING TRANSMITTER IN ITS ENTIRETY.
2. DISCONNECT AND REMOVE ASSOCIATED FIELD WIRING IN ITS ENTIRETY. REFER TO PLAN DRAWINGS FOR ADDITIONAL INFORMATION.

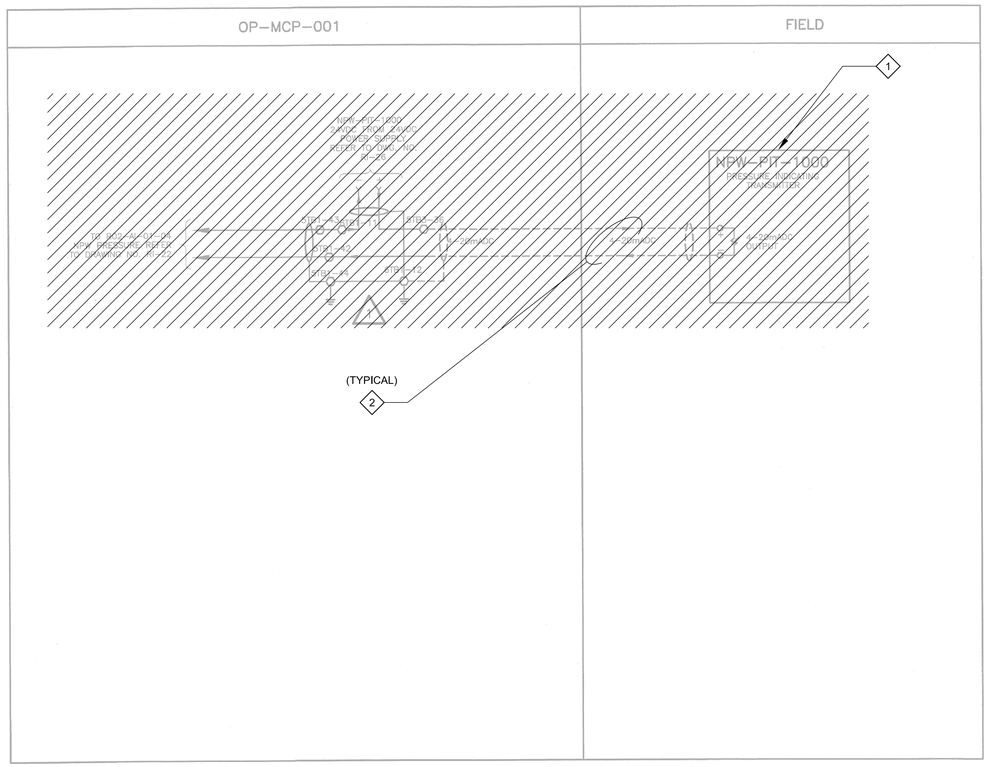

WIRING AND TERMINAL DEVICE LEGEND:

- DEVICE WIRING TERMINAL
- TERMINAL BLOCK LOCATED IN CONTROL PANEL "OP–MCP–001". ANY DEVICE SHOWN WITH DEVICE WIRING TERMINALS CONNECTED DIRECTLY TO THESE SYMBOLS WITH SOLID LINES IS ALSO LOCATED IN "OP–MCP–001".
- TERMINAL BLOCK LOCATED IN 480 VOLT MOTOR CONTROL CENTER "OP–MCC–011" OR "OP–MCC–01R" AS APPLICABLE. ANY DEVICE SHOWN WITH DEVICE WIRING TERMINALS CONNECTED DIRECTLY TO THESE SYMBOLS WITH SOLID LINES IS ALSO LOCATED IN "OP–MCC–011" OR "OP–MCC–01R" AS APPLICABLE.
- TERMINAL BLOCK LOCATED IN FIELD MOUNTED EQUIPMENT AS NOTED. ANY DEVICE SHOWN WITH DEVICE WIRING TERMINALS CONNECTED DIRECTLY TO THESE SYMBOLS WITH SOLID LINES IS LOCATED IN OR ON THE EQUIPMENT.
- FIELD WIRING

GENERAL NOTES:

1. CLOSELY COORDINATE INSTALLATION/LOCATION WITH MECHANICAL.
2. REFER TO PLANS FOR APPROXIMATE LOCATION/MOUNTING DETAILS/ETC., OF THE PROPOSED EQUIPMENT SHOWN HEREIN.

REFERENCE DRAWINGS:

HE–2 – HE–9 – ONE–LINE DIAGRAMS

RI–22 – PLC I/O WIRING SCHEMATICS

RECORD DRAWING

THIS CONSTRUCTION DOCUMENT WAS PREPARED USING INFORMATION SUPPLIED BY THE CONTRACTOR TO REPRESENT CONSTRUCTION CHANGES. THIS DOCUMENT IS FOR INFORMATION AND REFERENCE IN CONNECTION WITH THE OWNER'S USE AND OCCUPANCY OF THE PROJECT AND IS NOT INTENDED FOR BID, PERMIT OR CONSTRUCTION.

BY: K.A. Harutunian DATE: 1/5/2007

REUSE OF DOCUMENTS
This document and the ideas and designs incorporated herein as an instrument of professional service has been developed, designed and prepared by Harutunian Engineering, Inc. and is not to be used, in whole or part, for any other project without the written authorization of the City of Austin and Harutunian Engineering, Inc. © 2003

HARUTUNIAN ENGINEERING INCORPORATED
ENGINEERING AND ENVIRONMENTAL CONSULTANTS
305 EAST HUNTLAND DRIVE SUITE 500 AUSTIN, TEXAS 78752

NO.	DATE	REVISION	APPROV.
4			
3			
2			
1	1/5/7	RECORD DRAWING	K.A.H.

THE SEAL APPEARING ON THIS DOCUMENT WAS AUTHORIZED BY K. A. HARUTUNIAN, P.E. 59181 ON OCTOBER 16, 2003

WARNING
0 1/2
IF THIS BAR DOES NOT MEASURE 1" THEN DRAWING IS NOT TO SCALE

STATE OF TEXAS · K. A. HARUTUNIAN · 59181 · REGISTERED · PROFESSIONAL

Dsg. No. RI–8

CITY OF AUSTIN, TEXAS
NORTHEAST INTERIM WASTEWATER TREATMENT PLANT

NON–POTABLE WATER PRESSURE INSTRUMENT WIRING SCHEMATIC

Turner Collie & Braden Inc.
ENGINEERS • PLANNERS • PROJECT MANAGERS

Unit PUBLIC WORKS	Scale NONE	Date OCTOBER 2003	
Designed HEI	Checked HEI	Job No. 052–122094–0008	
Drawn HEI	Approved HEI	Sheet 260/327	

THIS CONFORMED DOCUMENT IS RELEASED FOR THE CONVENIENCE OF THE CONTRACTOR UNDER THE AUTHORITY OF:

K. A. HARUTUNIAN, P.E.
TX LIC NO. 59181

11-01-22
DATE

SEE DISCLAIMER FOR LIMITATIONS OF USE.

CONTRACT DOCUMENTS DATED FEBRUARY 28, 2022, AS PART OF THE BIDDING DOCUMENTS (DRAWINGS AND SPECIFICATIONS) AND SUBSEQUENTLY ISSUED ADDENDA HAVE BEEN MERGED INTO ONE CONFORMING SET OF DOCUMENTS FOR THE CONVENIENCE OF THE CONTRACTOR. IF INCONSISTENCIES OR AMBIGUITIES BETWEEN "CONFORMED" DOCUMENTS AND CONTRACT DOCUMENTS ARE FOUND, THE CONTRACT DOCUMENTS SHALL GOVERN.

This document, and the designs incorporated herein, is an instrument of professional service that has been developed, designed and prepared by Harutunian Engineering, Inc., and is not to be used, in whole or in part, for any other project without giving written notice to Harutunian Engineering, Inc.

REV	DATE	BY	DESCRIPTION
			CONFORMED DOCUMENTS

DESIGNED HEI
DRAWN HEI
CHECKED HEI
DATE NOVEMBER 2022

** ORIGINAL SEALED BY K.A. HARUTUNIAN 02-28-22 TX PE 59181 **

HARUTUNIAN ENGINEERING INCORPORATED
ENGINEERING AND ENVIRONMENTAL CONSULTANTS
8100 CROSS PARK DRIVE AUSTIN, TEXAS 78754
TBPE REGISTRATION NO. F-2408

carollo
TBPELS No. F-882

CITY OF AUSTIN
FOUNDED 1839
CITY OF AUSTIN

CITY OF AUSTIN
WILD HORSE RANCH WWTP EXPANSION
DEMOLITION
FILTER COMPLEX INSTRUMENT WIRING SCHEMATICS - DEMOLITION - 2

VERIFY SCALES
BAR IS ONE INCH ON ORIGINAL DRAWING
0 1"
IF NOT ONE INCH ON THIS SHEET, ADJUST SCALES ACCORDINGLY

JOB NO. 10976A.00
DRAWING NO. 50DN06
SHEET NO. 159 OF 464

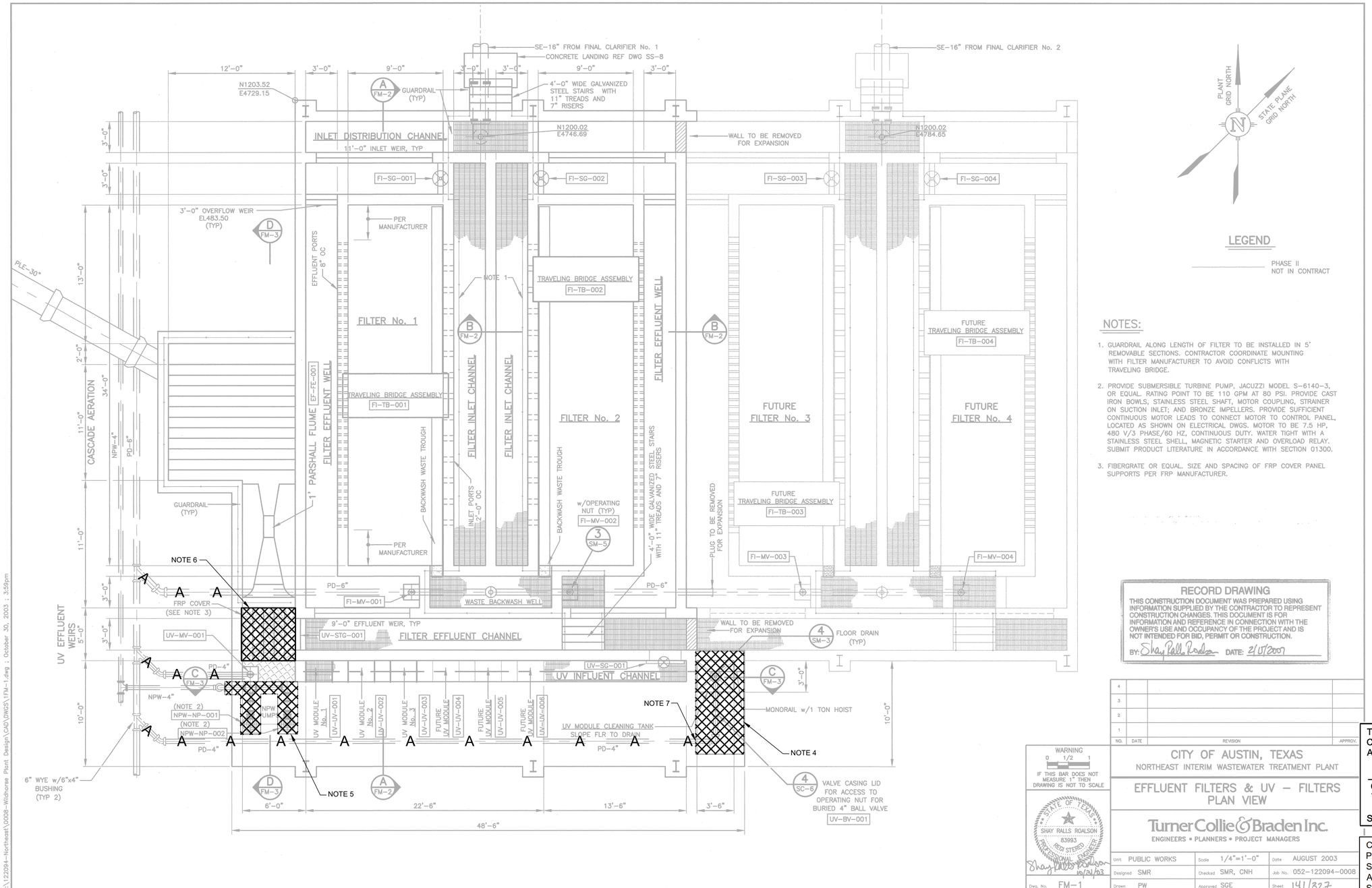

PLANT GRID NORTH

STATE PLANE GRID NORTH

LEGEND

PHASE II NOT IN CONTRACT

NOTES:

1. GUARDRAIL ALONG LENGTH OF FILTER TO BE INSTALLED IN 5' REMOVABLE SECTIONS. CONTRACTOR COORDINATE MOUNTING WITH FILTER MANUFACTURER TO AVOID CONFLICTS WITH TRAVELING BRIDGE.
2. PROVIDE SUBMERSIBLE TURBINE PUMP, JACUZZI MODEL S-6140-3, OR EQUAL. RATING POINT TO BE 110 GPM AT 80 PSI. PROVIDE CAST IRON BOWLS, STAINLESS STEEL SHAFT, MOTOR COUPLING, STRAINER ON SUCTION INLET; AND BRONZE IMPELLERS. PROVIDE SUFFICIENT CONTINUOUS MOTOR LEADS TO CONNECT MOTOR TO CONTROL PANEL, LOCATED AS SHOWN ON ELECTRICAL DWGS. MOTOR TO BE 7.5 HP, 480 V/3 PHASE/60 HZ, CONTINUOUS DUTY. WATER TIGHT WITH A STAINLESS STEEL SHELL, MAGNETIC STARTER AND OVERLOAD RELAY. SUBMIT PRODUCT LITERATURE IN ACCORDANCE WITH SECTION 01300.
3. FIBERGRATE OR EQUAL. SIZE AND SPACING OF FRP COVER PANEL SUPPORTS PER FRP MANUFACTURER.

NOTES:

1. THIS IS A RECORD DRAWING FROM A PREVIOUS CONTRACT. ACTUAL FIELD CONDITIONS MAY BE DIFFERENT FROM THOSE SHOWN ON THIS DRAWING. CONTRACTOR TO FIELD VERIFY INSTALLED CONDITIONS IMPACTED BY OR IMPACTING THIS WORK PRIOR TO INITIATING THE WORK. CONTRACTOR SHALL REFER TO CONSTRUCTION DOCUMENTS FOR RESPONSIBILITIES RELATIVE TO VERIFICATION OF EXISTING FACILITIES AND COORDINATION WITH PLANT OPERATION.
2. COORDINATES SHOWN ON THIS RECORD DRAWING MAY NOT MATCH THE PLANT GRID ESTABLISHED FOR THIS PROJECT. CONTRACTOR TO FIELD VERIFY INSTALLED CONDITIONS IMPACTED BY OR IMPACTING THIS WORK PRIOR TO INITIATING THE WORK.
3. CONTRACTOR SHALL REFER TO SPECIFICATION 01140 - WORK RESTRICTIONS FOR SHUTDOWN REQUIREMENTS AND SEQUENCING OF DEMOLITION IN ORDER TO ALLOW THE PLANT TO REMAIN IN SERVICE DURING CONSTRUCTION.
4. CONTRACTOR SHALL EXCAVATE AND REMOVE EXISTING UV MODULE CLEANING TANK IN ITS ENTIRETY. 4" PD PIPING SHALL BE REMOVED 5 FEET OUTSIDE THE EDGE OF THE STRUCTURE. REFER TO YARD PIPING DEMOLITION SHEETS FOR EXTENT OF 4" PD DEMOLITION IN THE YARD.
5. CONTRACTOR SHALL REMOVE EXISTING NON-POTABLE WATER PUMPS AND ASSOCIATED PIPING AND APPURTENANCES IN ITS ENTIRETY. 4" NPW PIPING SHALL BE REMOVED 5 FEET OUTSIDE THE EDGE OF THE STRUCTURE. REFER TO YARD PIPING DEMOLITION SHEETS FOR EXTENT OF 4" NPW DEMOLITION IN THE YARD.
6. CONTRACTOR SHALL REMOVE EXISTING UV EFFLUENT WEIRS AND CUT AN OPENING THROUGH EXISTING CONCRETE WALLS FOR PROPOSED 24" PE PIPING. REFER TO YARD PIPING SHEETS FOR LOCATION OF PROPOSED 24" PE PIPING IN THE YARD.
7. CAP AND ABANDON 4" PD LINE AT THE WESTERN EDGE OF THE DEMOLISHED CLEANING TANK.

LEGEND

DEMOLITION

– A – A – A – ABANDON

RECORD DRAWING

THIS CONSTRUCTION DOCUMENT WAS PREPARED USING INFORMATION SUPPLIED BY THE CONTRACTOR TO REPRESENT CONSTRUCTION CHANGES. THIS DOCUMENT IS FOR INFORMATION AND REFERENCE IN CONNECTION WITH THE OWNER'S USE AND OCCUPANCY OF THE PROJECT AND IS NOT INTENDED FOR BID, PERMIT OR CONSTRUCTION.

BY: Shay Ralls Roalson DATE: 2/17/2007

NO.	DATE	REVISION	APPROV.
4			
3			
2			
1			

WARNING 0 1/2 1 IF THIS BAR DOES NOT MEASURE 1" THEN DRAWING IS NOT TO SCALE

STATE OF TEXAS SHAY RALLS ROALSON 83993 REGISTERED PROFESSIONAL ENGINEER 10/31/03

CITY OF AUSTIN, TEXAS
NORTHEAST INTERIM WASTEWATER TREATMENT PLANT

EFFLUENT FILTERS & UV – FILTERS PLAN VIEW

Turner Collie & Braden Inc.
ENGINEERS • PLANNERS • PROJECT MANAGERS

Unit PUBLIC WORKS	Scale 1/4"=1'-0"	Date AUGUST 2003	
Designed SMR	Checked SMR, CNH	Job No. 052-122094-0008	
Drawn PW	Approved SGE	Sheet 141/327	
Dwg. No. FM-1			

THIS CONFORMED DOCUMENT IS RELEASED FOR THE CONVENIENCE OF THE CONTRACTOR UNDER THE AUTHORITY OF:

Casey Wauters 11-01-22

CASEY G. WAUTERS, P.E. DATE
TX LIC NO. 93889

SEE DISCLAIMER FOR LIMITATIONS OF USE.

CONTRACT DOCUMENTS DATED JUNE 10, 2022, AS PART OF THE BIDDING DOCUMENTS (DRAWINGS AND SPECIFICATIONS) AND SUBSEQUENTLY ISSUED ADDENDA HAVE BEEN MERGED INTO ONE CONFORMING SET OF DOCUMENTS FOR THE CONVENIENCE OF THE CONTRACTOR. IF INCONSISTENCIES OR AMBIGUITIES BETWEEN "CONFORMED" DOCUMENTS AND CONTRACT DOCUMENTS ARE FOUND, THE CONTRACT DOCUMENTS SHALL GOVERN.

REV	DATE	BY	DESCRIPTION
			CONFORMED DOCUMENTS

DESIGNED CW
DRAWN AW
CHECKED SGE
DATE FEBRUARY 2022

** ORIGINAL SEALED BY CASEY G. WAUTERS, P.E. 2/28/2022 TX PE 93889 **

AECOM TECHNICAL SERVICES INC.
13640 BRIARWICK DRIVE, SUITE 200
AUSTIN, TEXAS 78729
WWW.AECOM.COM
TBPE REG. NO. F-3580

carollo
TBPE No. F-882

CITY OF AUSTIN FOUNDED 1839

CITY OF AUSTIN

CITY OF AUSTIN
WILD HORSE RANCH WWTP EXPANSION
DEMOLITION
EXISTING FILTER STRUCTURE DEMOLITION PLAN

VERIFY SCALES
BAR IS ONE INCH ON ORIGINAL DRAWING
0 1"
IF NOT ONE INCH ON THIS SHEET, ADJUST SCALES ACCORDINGLY

JOB NO. 10976A.10
DRAWING NO. 55D01
SHEET NO. 160 OF 464

LAST SAVED BY: dseivert

PROJECT NO. 9585A10 FILE NAME: 9585A10_SheetSeed.dgn

E:\122094-Northeast\0008-Wildhorse Plant Design\CAD\DWGS\FM-1.dwg ; October 30, 2003 ; 3:59pm

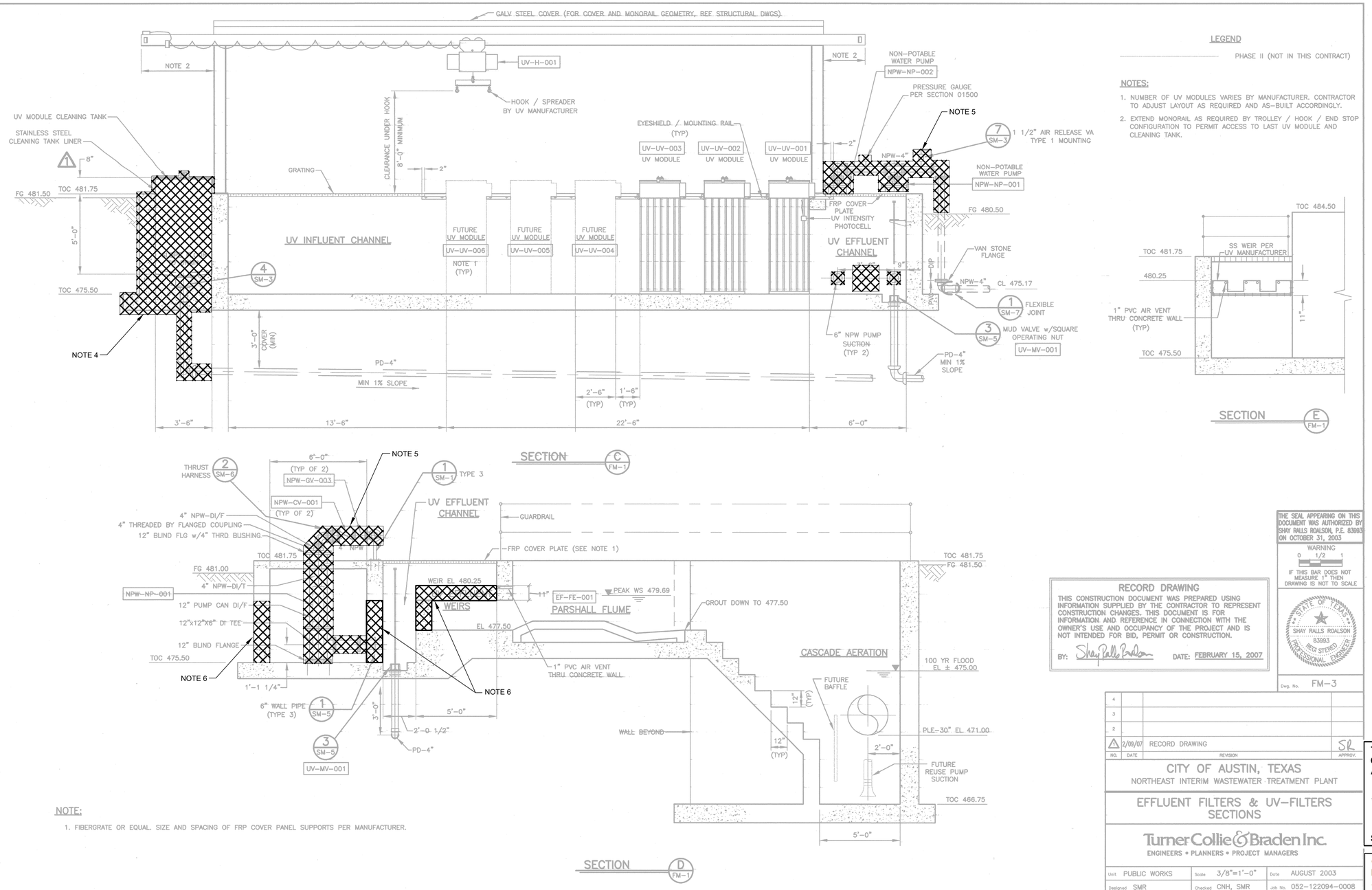

LEGEND

PHASE II (NOT IN THIS CONTRACT)

NOTES:

1. NUMBER OF UV MODULES VARIES BY MANUFACTURER. CONTRACTOR TO ADJUST LAYOUT AS REQUIRED AND AS-BUILT ACCORDINGLY.
2. EXTEND MONORAIL AS REQUIRED BY TROLLEY / HOOK / END STOP CONFIGURATION TO PERMIT ACCESS TO LAST UV MODULE AND CLEANING TANK.

SECTION E FM-1

NOTES:

1. THIS IS A RECORD DRAWING FROM A PREVIOUS CONTRACT. ACTUAL FIELD CONDITIONS MAY BE DIFFERENT FROM THOSE SHOWN ON THIS DRAWING. CONTRACTOR TO FIELD VERIFY INSTALLED CONDITIONS IMPACTED BY OR IMPACTING THIS WORK PRIOR TO INITIATING THE WORK. CONTRACTOR SHALL REFER TO CONSTRUCTION DOCUMENTS FOR RESPONSIBILITIES RELATIVE TO VERIFICATION OF EXISTING FACILITIES AND COORDINATION WITH PLANT OPERATION.
2. COORDINATES SHOWN ON THIS RECORD DRAWING MAY NOT MATCH THE PLANT GRID ESTABLISHED FOR THIS PROJECT. CONTRACTOR TO FIELD VERIFY INSTALLED CONDITIONS IMPACTED BY OR IMPACTING THIS WORK PRIOR TO INITIATING THE WORK.
3. CONTRACTOR SHALL REFER TO SPECIFICATION 01140 - WORK RESTRICTIONS FOR SHUTDOWN REQUIREMENTS AND SEQUENCING OF DEMOLITION IN ORDER TO ALLOW THE PLANT TO REMAIN IN SERVICE DURING CONSTRUCTION.
4. CONTRACTOR SHALL EXCAVATE AND REMOVE EXISTING UV MODULE CLEANING TANK IN ITS ENTIRETY. 4" PD PIPING SHALL BE REMOVED 5 FEET OUTSIDE THE EDGE OF THE STRUCTURE. REFER TO YARD PIPING DEMOLITION SHEETS FOR EXTENT OF 4" PD DEMOLITION IN THE YARD.
5. CONTRACTOR SHALL REMOVE EXISTING NON-POTABLE WATER PUMPS AND ASSOCIATED PIPING AND APPURTENANCES IN ITS ENTIRETY. 4" NPW PIPING SHALL BE REMOVED 5 FEET OUTSIDE THE EDGE OF THE STRUCTURE. REFER TO YARD PIPING DEMOLITION SHEETS FOR EXTENT OF 4" NPW DEMOLITION IN THE YARD.
6. CONTRACTOR SHALL REMOVE EXISTING UV EFFLUENT WEIRS AND CUT AN OPENING THROUGH EXISTING CONCRETE WALLS FOR PROPOSED 24" PE PIPING. REFER TO YARD PIPING SHEETS FOR LOCATION OF PROPOSED 24" PE PIPING IN THE YARD.

LEGEND

DEMOLITION

THE SEAL APPEARING ON THIS DOCUMENT WAS AUTHORIZED BY SHAY RALLS ROALSON, P.E. 83993 ON OCTOBER 31, 2003

WARNING
0 1/2 1
IF THIS BAR DOES NOT MEASURE 1" THEN DRAWING IS NOT TO SCALE

STATE OF TEXAS
SHAY RALLS ROALSON
83993
REGISTERED PROFESSIONAL ENGINEER

Dwg. No. FM-3

RECORD DRAWING

THIS CONSTRUCTION DOCUMENT WAS PREPARED USING INFORMATION SUPPLIED BY THE CONTRACTOR TO REPRESENT CONSTRUCTION CHANGES. THIS DOCUMENT IS FOR INFORMATION AND REFERENCE IN CONNECTION WITH THE OWNER'S USE AND OCCUPANCY OF THE PROJECT AND IS NOT INTENDED FOR BID, PERMIT OR CONSTRUCTION.

BY: Shay Ralls Roalson DATE: FEBRUARY 15, 2007

NO.	DATE	REVISION	APPROV.
4			
3			
2			
1	2/09/07	RECORD DRAWING	SR

CITY OF AUSTIN, TEXAS
NORTHEAST INTERIM WASTEWATER TREATMENT PLANT

EFFLUENT FILTERS & UV-FILTERS SECTIONS

Turner Collie & Braden Inc.
ENGINEERS • PLANNERS • PROJECT MANAGERS

Unit PUBLIC WORKS	Scale 3/8"=1'-0"	Date AUGUST 2003	
Designed SMR	Checked CNH, SMR	Job No. 052-122094-0008	
Drawn PW	Approved SGE	Sheet 143/327	

THIS CONFORMED DOCUMENT IS RELEASED FOR THE CONVENIENCE OF THE CONTRACTOR UNDER THE AUTHORITY OF:

CASEY G. WAUTERS, P.E. 11-01-22
TX LIC NO. 93889 DATE

SEE DISCLAIMER FOR LIMITATIONS OF USE.

CONTRACT DOCUMENTS DATED JUNE 10, 2022, AS PART OF THE BIDDING DOCUMENTS (DRAWINGS AND SPECIFICATIONS) AND SUBSEQUENTLY ISSUED ADDENDA HAVE BEEN MERGED INTO ONE CONFORMING SET OF DOCUMENTS FOR THE CONVENIENCE OF THE CONTRACTOR. IF INCONSISTENCIES OR AMBIGUITIES BETWEEN "CONFORMED" DOCUMENTS AND CONTRACT DOCUMENTS ARE FOUND, THE CONTRACT DOCUMENTS SHALL GOVERN.

REV	DATE	BY	DESCRIPTION
			CONFORMED DOCUMENTS

DESIGNED CW
DRAWN AW
CHECKED SGE
DATE FEBRUARY 2022

ORIGINAL SEALED BY CASEY G. WAUTERS, P.E. 2/28/2022 TX PE 93889

AECOM TECHNICAL SERVICES INC. 13640 BRIARWICK DRIVE, SUITE 200 AUSTIN, TEXAS 78729 WWW.AECOM.COM TBPE REG. NO. F-3580

carollo TBPE No. F-882

CITY OF AUSTIN FOUNDED 1839

CITY OF AUSTIN

WILD HORSE RANCH WWTP EXPANSION

DEMOLITION

EXISTING FILTER STRUCTURE DEMOLITION SECTIONS

VERIFY SCALES
BAR IS ONE INCH ON ORIGINAL DRAWING
0 1"
IF NOT ONE INCH ON THIS SHEET, ADJUST SCALES ACCORDINGLY

JOB NO. 10976A.10
DRAWING NO. 55D02
SHEET NO. 161 OF 464

LAST SAVED BY: dseivert

E:\122094-Northeast\0008-Wildhorse Plant Design\RECORD-DWGS\VOLUME 2 OF 3\11FM-3.dwg ; March 14, 2007 ; 4:15pm

PROJECT NO. 9585A10 FILE NAME: 9585A10_SheetSeed.dgn

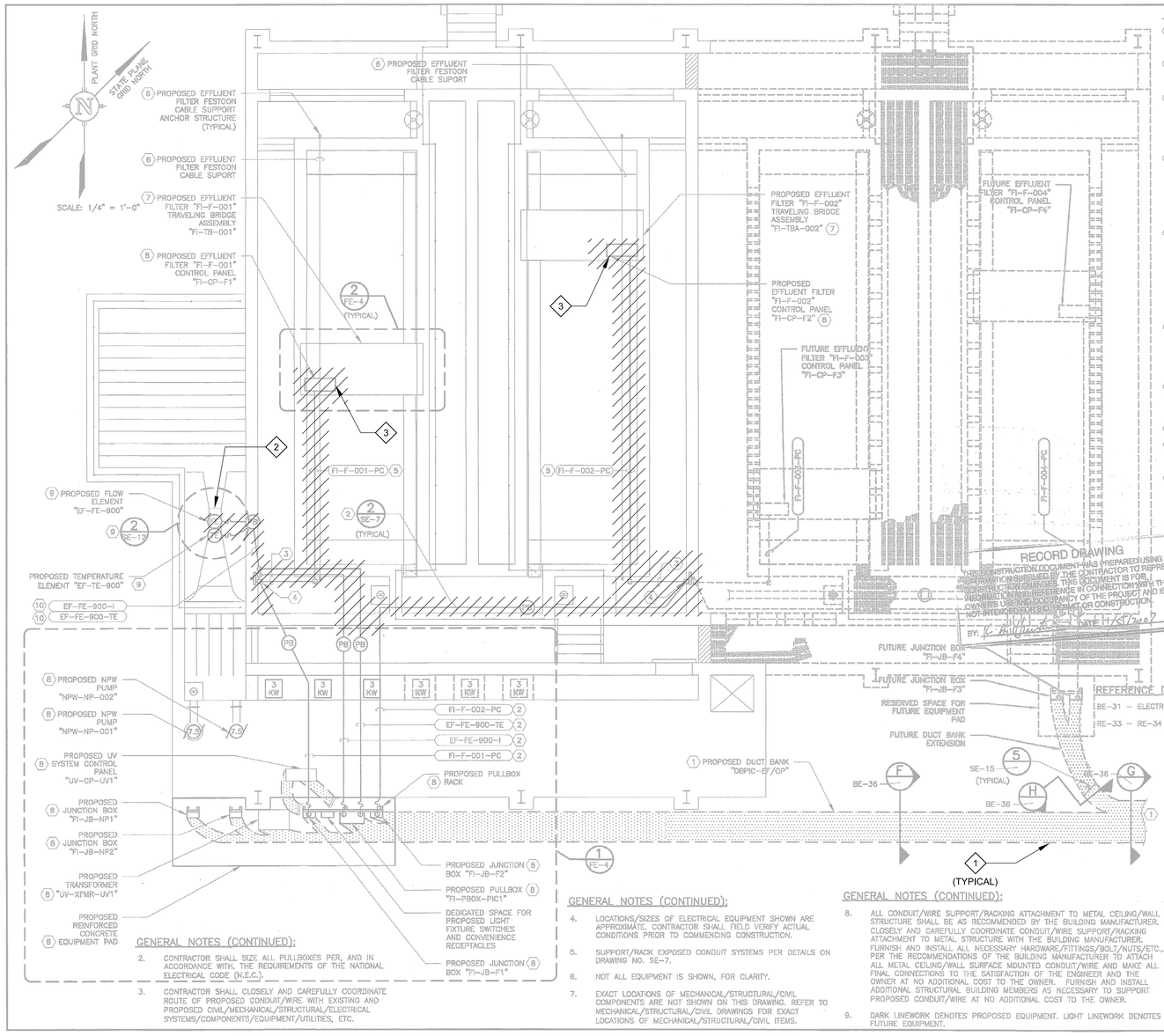

KEY NOTES:

1. SPACE AND ENCASE IN SAND PER THE DETAILS ON DRAWING NO. SE-8. PROPOSED DUCT BANK CONTINUES. REFER TO ELECTRICAL SITE PLAN DRAWING NO. BE-32 FOR ADDITIONAL INFORMATION.
2. PROPOSED CONDUIT/WIRE ROUTES SURFACE MOUNTED IN CEILING SPACE OF COMBINATION ULTRA-VIOLET/EFFLUENT FILTER STRUCTURE. PROPOSED CONDUIT/WIRE IS SHOWN SCHEMATICALLY FOR PURPOSES OF CLARITY. SUPPORT CONDUIT/WIRE PER THE DETAILS ON DRAWING NO. SE-7.
3. PROPOSED WIRE TURNS AND ROUTES EXPOSED (NOT ENCLOSED IN CONDUIT) OVER CHANNEL AT MINIMUM ELEVATION OF 531.5 FEET ABOVE MEAN SEA LEVEL. PROPOSED WIRE TURNS TO CONNECT TO CABLE FESTOON SUPPORT ASSEMBLY FURNISHED BY EFFLUENT FILTER MANUFACTURER. FURNISH AND INSTALL #304 STAINLESS STEEL CABLE GRIP TO SUPPORT EXPOSED WIRE AS MANUFACTURED BY "HUBBELL", OR APPROVED EQUAL. PROPOSED CABLE GRIP SHALL ATTACH TO EFFLUENT FILTER FESTOON SUPPORT ASSEMBLY.
4. PROPOSED CONDUIT/WIRE TURNS UP/DOWN TO AND TERMINATES AT MINIMUM ELEVATION OF 531.5 FEET ABOVE MEAN SEA LEVEL. SUPPORT CONDUIT/WIRE WITH DOUBLE CONDUIT SUPPORT CHANNELS ATTACHED TO THE EFFLUENT FILTER ROOF STRUCTURE PER THE DETAILS ON DRAWING NO. SE-7. FURNISH AND INSTALL GROMMETTED CABLE COMPRESSION FITTING WITH GLAND NUT AND NEOPRENE BUSHING AS MANUFACTURED BY "CROUSE-HINDS" TYPE CGB OR APPROVED EQUAL. FURNISH AND INSTALL CONDUIT COUPLING FOR MATING PROPOSED CABLE COMPRESSION FITTING TO PROPOSED CONDUIT. CLOSELY AND CAREFULLY COORDINATE WITH LOCATION OF EFFLUENT FILTER FESTOON CABLE SUPPORT ASSEMBLY.
5. PROPOSED CONDUIT TAG IS SHOWN TO AIDE IN WIRE IDENTIFICATION. PROPOSED WIRE IS ROUTED EXPOSED (NOT CONTAINED IN CONDUIT) ALONG FESTOON SUPPORT ASSEMBLY TO INTERCONNECT EFFLUENT FILTER CONTROL PANEL WITH DEDICATED EFFLUENT FILTER POWER/CONTROL WIRING TERMINATION JUNCTION BOX. FURNISH AND INSTALL WIRE OF ADEQUATE LENGTH AND WITH ALL NECESSARY CABLE/FESTOON INTERFACE FASTENERS WITH MAXIMUM SPACING OF 6'-0" BETWEEN ADJACENT CABLE/FESTOON INTERFACE FASTENERS TO ALLOW FOR MOVEMENT OF EFFLUENT FILTER TRAVELING BRIDGE ASSEMBLY ALONG ITS ENTIRE RANGE OF TRAVEL. CONNECT PROPOSED WIRES AT PROPOSED EFFLUENT FILTER CONTROL PANEL USING GROMMETTED CABLE COMPRESSION FITTING WITH GLAND NUT AND NEOPRENE BUSHING AS MANUFACTURED BY "CROUSE-HINDS" TYPE CGB OR APPROVED EQUAL.
6. FURNISH AND INSTALL FESTOON CABLE SUPPORT ASSEMBLY PER THE RECOMMENDATIONS/DRAWINGS PROVIDED BY THE EFFLUENT FILTER MANUFACTURER. THE CABLE FESTOON SUPPORT ASSEMBLY SHALL ALSO ADHERE TO THE REQUIREMENTS OF THE NATIONAL ELECTRICAL CODE (N.E.C). CLOSELY AND CAREFULLY COORDINATE ALL ASPECTS OF THE FESTOON CABLE SUPPORT ASSEMBLY INSTALLATION WITH THE EFFLUENT FILTER MANUFACTURER AND MAKE ALL FINAL CONNECTIONS.
7. THE LOCATION OF THE EFFLUENT FILTER TRAVELING BRIDGE ASSEMBLY DOES NOT REPRESENT THE LOCATION REQUIRED TO DETERMINE THE MINIMUM REQUIRED POWER/CONTROL INTERCONNECT CABLE LENGTH. CLOSELY AND CAREFULLY COORDINATE WITH THE EFFLUENT FILTER MANUFACTURER.
8. ALSO REFER TO DRAWING NO. FE-4 FOR ADDITIONAL INFORMATION.
9. FURNISH AND INSTALL FLOW ELEMENT AND TEMPERATURE SENSOR PER THE DETAILS ON DRAWING NO. SE-12. CLOSELY AND CAREFULLY COORDINATE LOCATION WITH MECHANICAL AND MAKE ALL FINAL CONNECTIONS.
10. PROPOSED CONDUIT/WIRE ROUTES VERTICALLY STACKED AND SURFACE MOUNTED ALONG WALL OF COMBINATION ULTRA-VIOLET/EFFLUENT FILTER STRUCTURE. SUPPORT CONDUIT/WIRE PER THE DETAILS ON DRAWING NO. SE-7.

GENERAL NOTES:

1. EXTREME CARE MUST BE TAKEN FOR THE INSTALLATION OF THE ELECTRICAL DUCT BANKS SINCE THERE ARE NO AVAILABLE AS BUILT RECORDS OF PROFILES IDENTIFYING THE LOCATION AND INVERT ELEVATIONS OF EXISTING UNDERGROUND ELECTRICAL SYSTEM AND UNDERGROUND MECHANICAL PIPING. ROUTING OF NEW DUCT BANK SHOWN IS BASED ON SCHEMATIC KNOWLEDGE OF THE SIZE OF MECHANICAL PIPING AND THEIR APPROXIMATE SIZE AND/OR LOCATION. NO DATA IS AVAILABLE PERTAINING TO EXISTING UNDERGROUND ELECTRICAL DUCT BANK SYSTEM AND ITS COORDINATION WITH THE UNDERGROUND MECHANICAL SYSTEM. THEREFORE THE CONTRACTOR IS TO EXERCISE EXTREME CARE, VERIFY LOCATION/ROUTING/ELEVATION OF EXISTING UNDERGROUND UTILITIES PRIOR TO COMMENCING FULL SCALE INSTALLATION PROCESS OF THE PROPOSED DUCT BANK SYSTEM. FOLLOWING THE DISCOVERY VERIFICATION OF EXISTING UNDERGROUND UTILITIES, SHOULD ADJUSTMENT/MODIFICATIONS BECOME A NECESSITY TO EITHER THE EXISTING OR PROPOSED SYSTEM (AS APPLICABLE), THE EXISTING DISCOVERED FIELD CONDITIONS MUST BE BROUGHT TO THE ENGINEERS ATTENTION FOR EXECUTION OF THE NECESSARY ADJUSTMENTS/MODIFICATIONS.

REFERENCE DRAWINGS:

BE-31 – ELECTRICAL SITE PLAN
RE-33 – RE-34 – CONDUIT/WIRE SCHEDULE

GENERAL NOTES (CONTINUED):

2. CONTRACTOR SHALL SIZE ALL PULLBOXES PER, AND IN ACCORDANCE WITH, THE REQUIREMENTS OF THE NATIONAL ELECTRICAL CODE (N.E.C.).
3. CONTRACTOR SHALL CLOSELY AND CAREFULLY COORDINATE ROUTE OF PROPOSED CONDUIT/WIRE WITH EXISTING AND PROPOSED CIVIL/MECHANICAL/STRUCTURAL/ELECTRICAL SYSTEMS/COMPONENTS/EQUIPMENT/UTILITIES, ETC.
4. LOCATIONS/SIZES OF ELECTRICAL EQUIPMENT SHOWN ARE APPROXIMATE. CONTRACTOR SHALL FIELD VERIFY ACTUAL CONDITIONS PRIOR TO COMMENCING CONSTRUCTION.
5. SUPPORT/RACK EXPOSED CONDUIT SYSTEMS PER DETAILS ON DRAWING NO. SE-7.
6. NOT ALL EQUIPMENT IS SHOWN, FOR CLARITY.
7. EXACT LOCATIONS OF MECHANICAL/STRUCTURAL/CIVIL COMPONENTS ARE NOT SHOWN ON THIS DRAWING. REFER TO MECHANICAL/STRUCTURAL/CIVIL DRAWINGS FOR EXACT LOCATIONS OF MECHANICAL/STRUCTURAL/CIVIL ITEMS.

GENERAL NOTES (CONTINUED):

8. ALL CONDUIT/WIRE SUPPORT/RACKING ATTACHMENT TO METAL CEILING/WALL STRUCTURE SHALL BE AS RECOMMENDED BY THE BUILDING MANUFACTURER. CLOSELY AND CAREFULLY COORDINATE CONDUIT/WIRE SUPPORT/RACKING ATTACHMENT TO METAL STRUCTURE WITH THE BUILDING MANUFACTURER. FURNISH AND INSTALL ALL NECESSARY HARDWARE/FITTINGS/BOLT/NUTS/ETC., PER THE RECOMMENDATIONS OF THE BUILDING MANUFACTURER TO ATTACH ALL METAL CEILING/WALL SURFACE MOUNTED CONDUIT/WIRE AND MAKE ALL FINAL CONNECTIONS TO THE SATISFACTION OF THE ENGINEER AND THE OWNER AT NO ADDITIONAL COST TO THE OWNER. FURNISH AND INSTALL ADDITIONAL STRUCTURAL BUILDING MEMBERS AS NECESSARY TO SUPPORT PROPOSED CONDUIT/WIRE AT NO ADDITIONAL COST TO THE OWNER.
9. DARK LINEWORK DENOTES PROPOSED EQUIPMENT. LIGHT LINEWORK DENOTES FUTURE EQUIPMENT.

KEY NOTES

1. REFER TO DUCT BANK SECTION DEMOLITION SHEETS (55DE04) FOR DEMOLITION DETAILS OF THE DUCT BANK CONTENTS.
2. DISCONNECT AND REMOVE FLOW AND TEMPERATURE ELEMENTS AND THEIR ASSOCIATED CONDUIT/WIRE AND SUPPORT SYSTEM IN ITS ENTIRETY.
3. DISCONNECT AND REMOVE FILTER CONTROL PANELS AND THEIR ASSOCIATED CONDUIT/WIRE AND SUPPORT SYSTEM IN ITS ENTIRETY.

REUSE OF DOCUMENTS
This document and the ideas and designs incorporated herein as an instrument of professional service has been developed, designed and prepared by Harutunian Engineering, Inc. and is not to be used, in whole or part, for any other project without the written authorization of the City of Austin and Harutunian Engineering, Inc. © 2003

HARUTUNIAN ENGINEERING INCORPORATED
ENGINEERING AND ENVIRONMENTAL CONSULTANTS
305 EAST HUNTLAND DRIVE
SUITE 500
AUSTIN, TEXAS
78752

NO.	DATE	REVISION	APPROV.
4			
3			
2			
1			

WARNING
0 1/2 1
IF THIS BAR DOES NOT MEASURE 1" THEN DRAWING IS NOT TO SCALE

K. A. HARUTUNIAN 59181 STATE OF TEXAS REGISTERED PROFESSIONAL ENGINEER
10/16/2003

Dwg. No. FE-1

CITY OF AUSTIN, TEXAS
NORTHEAST INTERIM WASTEWATER TREATMENT PLANT
EFFLUENT FILTERS & UV POWER AND I&C PLAN

Turner Collie & Braden Inc.
ENGINEERS • PLANNERS • PROJECT MANAGERS

Unit PUBLIC WORKS	Scale 1/4"=1'-0"	Date OCTOBER 2003	
Designed HEI	Checked HEI	Job No. 052-122094-0008	
Drawn HEI	Approved HEI	Sheet 144/327	

THIS CONFORMED DOCUMENT IS RELEASED FOR THE CONVENIENCE OF THE CONTRACTOR UNDER THE AUTHORITY OF:

K. A. Harutunian — 11-01-22

K. A. HARUTUNIAN, P.E. — DATE
TX LIC NO. 59181

SEE DISCLAIMER FOR LIMITATIONS OF USE.

CONTRACT DOCUMENTS DATED FEBRUARY 28, 2022, AS PART OF THE BIDDING DOCUMENTS (DRAWINGS AND SPECIFICATIONS) AND SUBSEQUENTLY ISSUED ADDENDA HAVE BEEN MERGED INTO ONE CONFORMING SET OF DOCUMENTS FOR THE CONVENIENCE OF THE CONTRACTOR. IF INCONSISTENCIES OR AMBIGUITIES BETWEEN "CONFORMED" DOCUMENTS AND CONTRACT DOCUMENTS ARE FOUND, THE CONTRACT DOCUMENTS SHALL GOVERN.

This document, and the designs incorporated herein, is an instrument of professional service that has been developed, designed and prepared by Harutunian Engineering, Inc., and is not to be used, in whole or in part, for any other project without giving written notice to Harutunian Engineering, Inc.

REV	DATE	BY	DESCRIPTION
			CONFORMED DOCUMENTS

DESIGNED HEI
DRAWN HEI
CHECKED HEI
DATE NOVEMBER 2022

** ORIGINAL SEALED BY K.A. HARUTUNIAN 02-28-22 TX PE 59181 **

HARUTUNIAN ENGINEERING INCORPORATED
ENGINEERING AND ENVIRONMENTAL CONSULTANTS
8100 CROSS PARK DRIVE
AUSTIN, TEXAS 78754
TBPE REGISTRATION NO. F-2408

carollo
TBPELS No. F-882

CITY OF AUSTIN FOUNDED 1839
CITY OF AUSTIN

CITY OF AUSTIN
WILD HORSE RANCH WWTP EXPANSION
DEMOLITION
FILTER COMPLEX
POWER AND I&C PLAN - DEMOLITION

VERIFY SCALES
BAR IS ONE INCH ON ORIGINAL DRAWING
0 1"
IF NOT ONE INCH ON THIS SHEET, ADJUST SCALES ACCORDINGLY

JOB NO. 10976A.00
DRAWING NO. 55DE01
SHEET NO. 162 OF 464

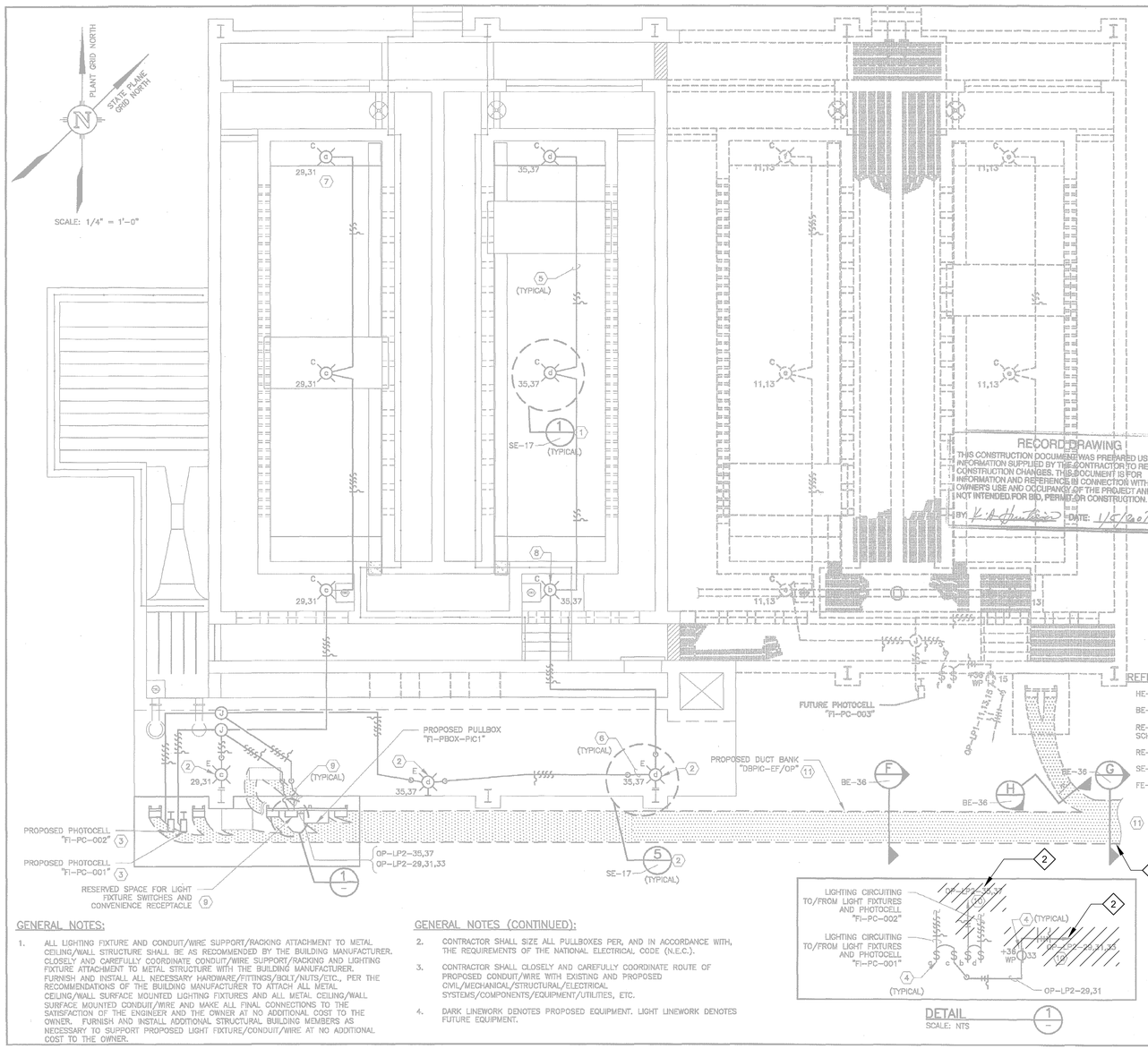

DETAIL
SCALE: NTS

GENERAL NOTES:

1. ALL LIGHTING FIXTURE AND CONDUIT/WIRE SUPPORT/RACKING ATTACHMENT TO METAL CEILING/WALL STRUCTURE SHALL BE AS RECOMMENDED BY THE BUILDING MANUFACTURER. CLOSELY AND CAREFULLY COORDINATE CONDUIT/WIRE SUPPORT/RACKING AND LIGHTING FIXTURE ATTACHMENT TO METAL STRUCTURE WITH THE BUILDING MANUFACTURER. FURNISH AND INSTALL ALL NECESSARY HARDWARE/FITTINGS/BOLT/NUTS/ETC., PER THE RECOMMENDATIONS OF THE BUILDING MANUFACTURER TO ATTACH ALL METAL CEILING/WALL SURFACE MOUNTED LIGHTING FIXTURES AND ALL METAL CEILING/WALL SURFACE MOUNTED CONDUIT/WIRE AND MAKE ALL FINAL CONNECTIONS TO THE SATISFACTION OF THE ENGINEER AND THE OWNER AT NO ADDITIONAL COST TO THE OWNER. FURNISH AND INSTALL ADDITIONAL STRUCTURAL BUILDING MEMBERS AS NECESSARY TO SUPPORT PROPOSED LIGHT FIXTURE/CONDUIT/WIRE AT NO ADDITIONAL COST TO THE OWNER.

GENERAL NOTES (CONTINUED):

2. CONTRACTOR SHALL SIZE ALL PULLBOXES PER, AND IN ACCORDANCE WITH, THE REQUIREMENTS OF THE NATIONAL ELECTRICAL CODE (N.E.C.).
3. CONTRACTOR SHALL CLOSELY AND CAREFULLY COORDINATE ROUTE OF PROPOSED CONDUIT/WIRE WITH EXISTING AND PROPOSED CIVIL/MECHANICAL/STRUCTURAL/ELECTRICAL SYSTEMS/COMPONENTS/EQUIPMENT/UTILITIES, ETC.
4. DARK LINEWORK DENOTES PROPOSED EQUIPMENT. LIGHT LINEWORK DENOTES FUTURE EQUIPMENT.

KEY NOTES:

1. FURNISH AND INSTALL LIGHT FIXTURE SURFACE MOUNTED TO CEILING STRUCTURE AND MAKE ALL FINAL CONNECTIONS PER THE DETAILS ON DRAWING NO. SE-17. TYPICAL FOR ALL TYPE "C" LIGHT FIXTURES.
2. FURNISH AND INSTALL LIGHTING FIXTURE SURFACE MOUNTED TO COLUMN AND MAKE ALL FINAL CONNECTIONS PER THE DETAILS ON DRAWING NO. SE-17. TYPICAL FOR ALL TYPE "E" LIGHT FIXTURES.
3. FURNISH AND INSTALL PHOTOCELL IN WEATHERPROOF "FS" TYPE BOX COMPLETE WITH NEMA 4X GASKETED STAINLESS STEEL COVERPLATE. MOUNT SURFACE MOUNTED TO ROOF STRUCTURE PER THE DETAILS ON DRAWING NO. SE-14 AND SIMILAR TO TYPE "E" LIGHT FIXTURE MOUNTING DETAILS ON DRAWING NO. SE-17. ORIENT PHOTOCELL PER THE MANUFACTURER'S RECOMMENDATIONS. MAKE ALL FINAL CONNECTIONS PER THE MANUFACTURER'S WIRING DIAGRAMS. PROPOSED PHOTOCELL SHALL BE AS MANUFACTURED BY "TORK", MODEL NO. 2002, OR APPROVED EQUAL.
4. FURNISH AND INSTALL IN WEATHERPROOF BOX SURFACE MOUNTED TO PROPOSED PULLBOX RACK PER THE DETAILS ON DRAWING NO. SE-14.
5. PROPOSED CONDUIT/WIRE ROUTES SURFACE MOUNTED IN CEILING SPACE OF STRUCTURE. SUPPORT PROPOSED CONDUIT/WIRE PER THE DETAILS ON DRAWING NO. SE-7. PROPOSED CONDUIT/WIRE IS SHOWN SCHEMATICALLY FOR PURPOSES OF CLARITY.
6. PROPOSED CONDUIT/WIRE ROUTES SURFACE MOUNTED ALONG COLUMN. SUPPORT PROPOSED CONDUIT/WIRE PER THE DETAILS ON DRAWING NO. SE-7. PROPOSED CONDUIT/WIRE IS SHOWN SCHEMATICALLY FOR PURPOSES OF CLARITY.
7. INTERCONNECT PROPOSED PHOTOCELL "FI-PC-001" WITH THIS LIGHT FIXTURE.
8. INTERCONNECT PROPOSED PHOTOCELL "FI-PC-002" WITH THIS LIGHT FIXTURE.
9. FURNISH AND INSTALL LIQUID-TIGHT FLEXIBLE CONDUIT TO INTERCONNECT PROPOSED CONDUIT/WIRE SURFACE MOUNTED TO PROPOSED EFFLUENT FILTER STRUCTURE TO PROPOSED PULLBOX AND MAKE ALL FINAL CONNECTIONS. REFER TO THE SPECIFICATIONS FOR LIQUID-TIGHT FLEXIBLE CONDUIT LENGTH AND ADDITIONAL INFORMATION.
10. FURNISH AND INSTALL CONDUIT/WIRE TO INTERCONNECT WITH "OP-LP-002" INSIDE THE OPERATIONS BUILDING VIA PULLBOX "FI-PBOX-PIC1" (NOT SHOWN).
11. DUCT BANK CONTINUES. SPACE AND ENCASE IN SAND PER THE DETAILS ON DRAWING NO. SE-8. REFER TO ENLARGED SITE PLAN DRAWING NO. BE-32 FOR ADDITIONAL INFORMATION.

GENERAL NOTES (CONTINUED):

5. EXTREME CARE MUST BE TAKEN FOR THE INSTALLATION OF THE ELECTRICAL DUCT BANKS SINCE THERE ARE NO AVAILABLE AS BUILT RECORDS OF PROFILES IDENTIFYING THE LOCATION AND INVERT ELEVATIONS OF EXISTING UNDERGROUND ELECTRICAL SYSTEM AND UNDERGROUND MECHANICAL PIPING. ROUTING OF NEW DUCT BANK SHOWN IS BASED ON SCHEMATIC KNOWLEDGE OF THE SIZE OF MECHANICAL PIPING AND THEIR APPROXIMATE SIZE AND/OR LOCATION. NO DATA IS AVAILABLE PERTAINING TO EXISTING UNDERGROUND ELECTRICAL DUCT BANK SYSTEM AND ITS COORDINATION WITH THE UNDERGROUND MECHANICAL SYSTEM. THEREFORE THE CONTRACTOR IS TO EXERCISE EXTREME CARE, VERIFY LOCATION/ROUTING/ELEVATION OF EXISTING UNDERGROUND UTILITIES PRIOR TO COMMENCING FULL SCALE INSTALLATION PROCESS OF THE PROPOSED DUCT BANK SYSTEM. FOLLOWING THE DISCOVERY VERIFICATION OF EXISTING UNDERGROUND UTILITIES, SHOULD ADJUSTMENT/MODIFICATIONS BECOME A NECESSITY TO EITHER THE EXISTING OR PROPOSED SYSTEM (AS APPLICABLE), THE EXISTING DISCOVERED FIELD CONDITIONS MUST BE BROUGHT TO THE ENGINEERS ATTENTION FOR EXECUTION OF THE NECESSARY ADJUSTMENTS/MODIFICATIONS.
6. LOCATIONS/SIZES OF ELECTRICAL EQUIPMENT SHOWN ARE APPROXIMATE. CONTRACTOR SHALL FIELD VERIFY ACTUAL CONDITIONS PRIOR TO COMMENCING CONSTRUCTION.
7. SUPPORT/RACK EXPOSED CONDUIT SYSTEMS PER DETAILS ON DRAWING NO. SE-7.
8. NOT ALL EQUIPMENT IS SHOWN, FOR CLARITY.
9. EXACT LOCATIONS OF MECHANICAL/STRUCTURAL/CIVIL COMPONENTS ARE NOT SHOWN ON THIS DRAWING. REFER TO MECHANICAL/STRUCTURAL/CIVIL DRAWINGS FOR EXACT LOCATIONS OF MECHANICAL/STRUCTURAL/CIVIL ITEMS.

REFERENCE DRAWINGS:

HE-11 – OPERATIONS BUILDING EQUIPMENT LOCATION
BE-1 – BE-2 – ELECTRICAL SITE PLAN
RE-33 – RE-34 – CONDUIT/WIRE SCHEDULE
RE-35 – RE-38 – PANEL SCHEDULES
SE-1 – LIGHTING FIXTURE SCHEDULE
FE-1 – POWER PLAN

RECORD DRAWING
THIS CONSTRUCTION DOCUMENT WAS PREPARED USING INFORMATION SUPPLIED BY THE CONTRACTOR TO REPRESENT CONSTRUCTION CHANGES. THIS DOCUMENT IS FOR INFORMATION AND REFERENCE IN CONNECTION WITH THE OWNER'S USE AND OCCUPANCY OF THE PROJECT AND IS NOT INTENDED FOR BID, PERMIT OR CONSTRUCTION.
BY: K.A. Harutunian DATE: 1/5/2007

REUSE OF DOCUMENTS
This document and the ideas and designs incorporated herein as an instrument of professional service has been developed, designed and prepared by Harutunian Engineering, Inc. and is not to be used, in whole or part, for any other project without the written authorization of the City of Austin and Harutunian Engineering, Inc. © 2003

HARUTUNIAN ENGINEERING INCORPORATED
ENGINEERING AND ENVIRONMENTAL CONSULTANTS
309 EAST HUNTLAND DRIVE, SUITE 500, AUSTIN, TEXAS 78752

NO.	DATE	REVISION	APPROV.
4			
3			
2			
1			

WARNING
0 1/2 1
IF THIS BAR DOES NOT MEASURE 1" THEN DRAWING IS NOT TO SCALE

K. A. HARUTUNIAN 59181 STATE OF TEXAS REGISTERED PROFESSIONAL ENGINEER
10/18/2003

CITY OF AUSTIN, TEXAS
NORTHEAST INTERIM WASTEWATER TREATMENT PLANT

EFFLUENT FILTERS & UV
LIGHTING AND AUXILIARY SYSTEMS PLAN

Turner Collie & Braden Inc.
ENGINEERS • PLANNERS • PROJECT MANAGERS

Unit PUBLIC WORKS	Scale AS NOTED	Date OCTOBER 2003	
Designed HEI	Checked HEI	Job No. 052-122094-0008	
Drawn HEI	Approved HEI	Sheet 145/327	
Dwg. No. FE-2			

KEY NOTES

1. REFER TO DUCT BANK SECTION DEMOLITION SHEETS [55DE04] FOR DEMOLITION DETAILS OF THE DUCT BANK CONTENTS.
2. DISCONNECT CABLE/WIRE HOMERUN TO LIGHTING PANEL "OP-LP-002" IN THE OPERATIONS BUILDING. CIRCUIT TO BE RE-FED DURING RENOVATION ACTIVITIES.

THIS CONFORMED DOCUMENT IS RELEASED FOR THE CONVENIENCE OF THE CONTRACTOR UNDER THE AUTHORITY OF:

K. A. HARUTUNIAN, P.E.
TX LIC NO. 59181
11-01-22
DATE

SEE DISCLAIMER FOR LIMITATIONS OF USE.

CONTRACT DOCUMENTS DATED FEBRUARY 28, 2022, AS PART OF THE BIDDING DOCUMENTS (DRAWINGS AND SPECIFICATIONS) AND SUBSEQUENTLY ISSUED ADDENDA HAVE BEEN MERGED INTO ONE CONFORMING SET OF DOCUMENTS FOR THE CONVENIENCE OF THE CONTRACTOR. IF INCONSISTENCIES OR AMBIGUITIES BETWEEN "CONFORMED" DOCUMENTS AND CONTRACT DOCUMENTS ARE FOUND, THE CONTRACT DOCUMENTS SHALL GOVERN.

This document, and the designs incorporated herein, is an instrument of professional service that has been developed, designed and prepared by Harutunian Engineering, Inc., and is not to be used, in whole or in part, for any other project without giving written notice to Harutunian Engineering, Inc.

REV	DATE	BY	DESCRIPTION
			CONFORMED DOCUMENTS

DESIGNED HEI
DRAWN HEI
CHECKED HEI
DATE NOVEMBER 2022

** ORIGINAL SEALED BY K.A. HARUTUNIAN 02-28-22 TX PE 59181 **

HARUTUNIAN ENGINEERING INCORPORATED
ENGINEERING AND ENVIRONMENTAL CONSULTANTS
8100 CROSS PARK DRIVE, AUSTIN, TEXAS 78754
TBPE REGISTRATION NO. F-2408

carollo®
TBPELS No. F-882

CITY OF AUSTIN FOUNDED 1839
CITY OF AUSTIN

CITY OF AUSTIN
WILD HORSE RANCH WWTP EXPANSION
DEMOLITION
FILTER COMPLEX
AUXILIARY PLAN - DEMOLITION

VERIFY SCALES
BAR IS ONE INCH ON ORIGINAL DRAWING
0 1"
IF NOT ONE INCH ON THIS SHEET, ADJUST SCALES ACCORDINGLY

JOB NO. 10976A.00
DRAWING NO. 55DE02
SHEET NO. 163 OF 464

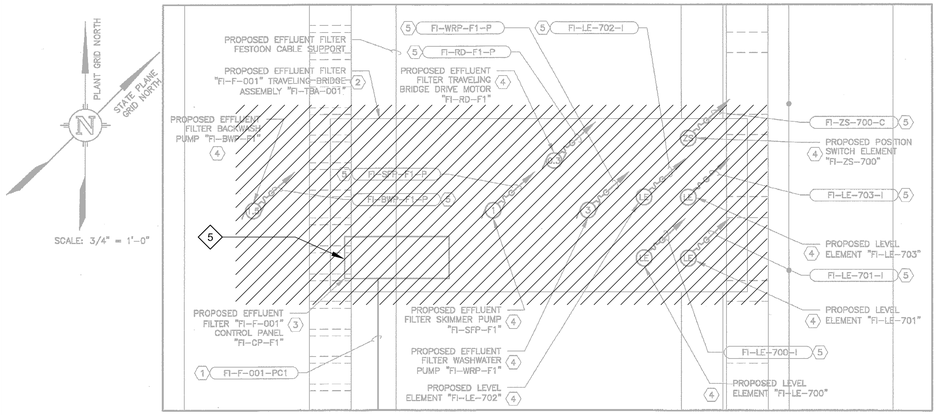
PLANT GRID NORTH
STATE PLANE GRID NORTH
SCALE: 3/4" = 1'-0"
PROPOSED EFFLUENT FILTER FESTOON CABLE SUPPORT
PROPOSED EFFLUENT FILTER "FI-F-001" TRAVELING-BRIDGE ASSEMBLY "FI-TBA-001"
PROPOSED EFFLUENT FILTER BACKWASH PUMP "FI-BWP-P1"
PROPOSED EFFLUENT FILTER "FI-F-001" CONTROL PANEL "FI-CP-F1"
FI-F-001-PC1
PROPOSED EFFLUENT FILTER TRAVELING BRIDGE DRIVE MOTOR "FI-RD-F1"
PROPOSED EFFLUENT FILTER SKIMMER PUMP "FI-SFP-F1"
PROPOSED EFFLUENT FILTER WASHWATER PUMP "FI-WRP-F1"
PROPOSED LEVEL ELEMENT "FI-LE-702"
PROPOSED LEVEL ELEMENT "FI-LE-700"
PROPOSED POSITION SWITCH ELEMENT "FI-ZS-700"
PROPOSED LEVEL ELEMENT "FI-LE-703"
PROPOSED LEVEL ELEMENT "FI-LE-701"
FI-WRP-F1-P
FI-RD-F1-P
FI-LE-702-I
FI-ZS-700-C
FI-LE-703-I
FI-LE-701-I
FI-LE-700-I
FI-BWP-F1-P
FI-SFP-F1-P
FI-F-001-P
FI-F-001-C
FI-CP-F1-C
FI-CP-F1-I
FI-F-001-I
FI-F-001-PC
FI-CP-F1-P
FI-F-001-PC
FI-CP-F1-C
FI-CP-F1-I
FI-F-001-I
FI-F-001-P
FI-F-001-C

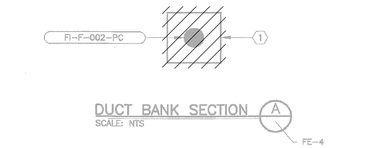

DUCT BANK SECTION A
SCALE: NTS

FE-4

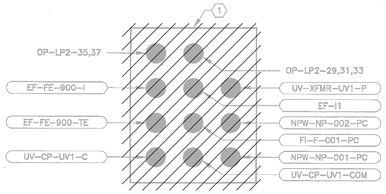

DUCT BANK SECTION B
SCALE: NTS

FE-4

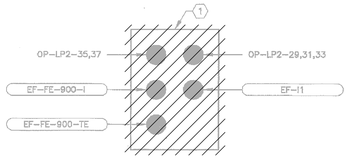

DUCT BANK SECTION C
SCALE: NTS

FE-4

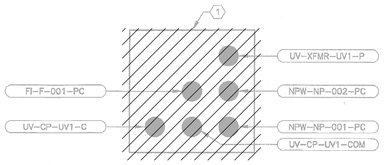

DUCT BANK SECTION D
SCALE: NTS

FE-4

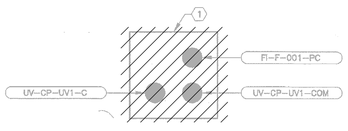

DUCT BANK SECTION E
SCALE: NTS

FE-4

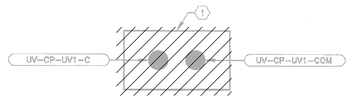

DUCT BANK SECTION F
SCALE: NTS

FE-4

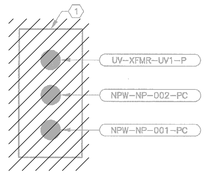

DUCT BANK SECTION G
SCALE: NTS

FE-4

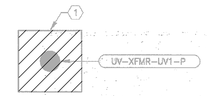

DUCT BANK SECTION H
SCALE: NTS

FE-4

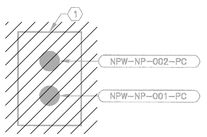

DUCT BANK SECTION I
SCALE: NTS

FE-4

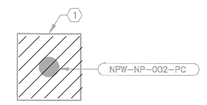

DUCT BANK SECTION J
SCALE: NTS

FE-4

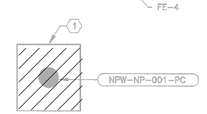

DUCT BANK SECTION K
SCALE: NTS

FE-4

CONDUIT/DUCT BANK SECTION DIMENSION TABLE

LEGEND:

NOTE: DIMENSIONS SHOWN ON TABLE ARE MAXIMUM DIMENSIONS IN INCHES.

SECTION IDENTIFIER	HORIZONTAL (INCHES)	VERTICAL (INCHES)
A	12"	12"
B	24"	30"
C	18"	24"
D	24"	24"
E	18"	18"
F	18"	12"
G	12"	24"
H	12"	12"
I	12"	18"
J	12"	12"
K	12"	12"

NOTE: REFER TO "CONDUIT/DUCT BANK SECTION DIMENSION TABLE" ON THIS DRAWING FOR MAXIMUM DIMENSIONS OF THE CONDUIT/DUCT BANK SECTIONS ON THIS DRAWING.

KEY NOTES:

(1) SPACE AND ENCASE IN SAND PER THE DETAILS ON DRAWING NO. SE-8.

GENERAL NOTES:

1. EXTREME CARE MUST BE TAKEN FOR THE INSTALLATION OF THE ELECTRICAL DUCT BANKS SINCE THERE ARE NO AVAILABLE AS BUILT RECORDS OF PROFILES IDENTIFYING THE LOCATION AND INVERT ELEVATIONS OF EXISTING UNDERGROUND ELECTRICAL SYSTEM AND UNDERGROUND MECHANICAL PIPING. ROUTING OF NEW DUCT BANK SHOWN IS BASED ON SCHEMATIC KNOWLEDGE OF THE SIZE OF MECHANICAL PIPING AND THEIR APPROXIMATE SIZE AND/OR LOCATION. NO DATA IS AVAILABLE PERTAINING TO EXISTING UNDERGROUND ELECTRICAL DUCT BANK SYSTEM AND ITS COORDINATION WITH THE UNDERGROUND MECHANICAL SYSTEM. THEREFORE THE CONTRACTOR IS TO EXERCISE EXTREME CARE, VERIFY LOCATION/ROUTING/ELEVATION OF EXISTING UNDERGROUND UTILITIES PRIOR TO COMMENCING FULL SCALE INSTALLATION PROCESS OF THE PROPOSED DUCT BANK SYSTEM. FOLLOWING THE DISCOVERY VERIFICATION OF EXISTING UNDERGROUND UTILITIES, SHOULD ADJUSTMENT/MODIFICATIONS BECOME A NECESSITY TO EITHER THE EXISTING OR PROPOSED SYSTEM (AS APPLICABLE), THE EXISTING DISCOVERED FIELD CONDITIONS MUST BE BROUGHT TO THE ENGINEERS ATTENTION FOR EXECUTION OF THE NECESSARY ADJUSTMENTS/MODIFICATIONS.

REFERENCE DRAWINGS:

RE-33 – RE-34 – CONDUIT/WIRE SCHEDULE

RE-35 – RE-38 – PANEL SCHEDULES

RECORD DRAWING
THIS CONSTRUCTION DOCUMENT WAS PREPARED USING INFORMATION SUPPLIED BY THE CONTRACTOR TO REPRESENT CONSTRUCTION CHANGES. THIS DOCUMENT IS FOR INFORMATION AND REFERENCE IN CONNECTION WITH THE OWNER'S USE AND OCCUPANCY OF THE PROJECT AND IS NOT INTENDED FOR BID, PERMIT OR CONSTRUCTION.
BY: K.A. Harutunian DATE: 1/5/2007

REUSE OF DOCUMENTS
This document and the ideas and designs incorporated herein as an instrument of professional service has been developed, designed and prepared by Harutunian Engineering, Inc. and is not to be used, in whole or part, for any other project without the written authorization of the City of Austin and Harutunian Engineering, Inc. © 2003

HARUTUNIAN ENGINEERING INCORPORATED
ENGINEERING AND ENVIRONMENTAL CONSULTANTS
305 EAST HIGHLAND DRIVE SUITE 100 AUSTIN, TEXAS 78758

NO.	DATE	REVISION	APPROV.
4			
3			
2			
1			

WARNING
0 1/2 1
IF THIS BAR DOES NOT MEASURE 1" THEN DRAWING IS NOT TO SCALE

K.A. Harutunian
STATE OF TEXAS
K. A. HARUTUNIAN
59181
REGISTERED PROFESSIONAL ENGINEER
10/16/2003

Dwg. No. FE-3

CITY OF AUSTIN, TEXAS
NORTHEAST INTERIM WASTEWATER TREATMENT PLANT

EFFLUENT FILTERS & UV DUCT BANK SECTIONAL VIEWS (SHEET 1 OF 1)

Turner Collie & Braden Inc.
ENGINEERS • PLANNERS • PROJECT MANAGERS

Unit PUBLIC WORKS	Scale NONE	Date OCTOBER 2003	
Designed HEI	Checked HEI	Job No. 052-122094-0008	
Drawn HEI	Approved HEI	Sheet 146/327	

THIS CONFORMED DOCUMENT IS RELEASED FOR THE CONVENIENCE OF THE CONTRACTOR UNDER THE AUTHORITY OF:

K. A. HARUTUNIAN, P.E.
TX LIC NO. 59181

11-01-22
DATE

SEE DISCLAIMER FOR LIMITATIONS OF USE.

CONTRACT DOCUMENTS DATED FEBRUARY 28, 2022, AS PART OF THE BIDDING DOCUMENTS (DRAWINGS AND SPECIFICATIONS) AND SUBSEQUENTLY ISSUED ADDENDA HAVE BEEN MERGED INTO ONE CONFORMING SET OF DOCUMENTS FOR THE CONVENIENCE OF THE CONTRACTOR. IF INCONSISTENCIES OR AMBIGUITIES BETWEEN "CONFORMED" DOCUMENTS AND CONTRACT DOCUMENTS ARE FOUND, THE CONTRACT DOCUMENTS SHALL GOVERN.

This document, and the designs incorporated herein, is an instrument of professional service that has been developed, designed and prepared by Harutunian Engineering, Inc., and is not to be used, in whole or in part, for any other project without giving written notice to Harutunian Engineering, Inc.

REV	DATE	BY	DESCRIPTION
			CONFORMED DOCUMENTS

DESIGNED HEI
DRAWN HEI
CHECKED HEI
DATE NOVEMBER 2022

** ORIGINAL SEALED BY K.A. HARUTUNIAN 02-28-22 TX PE 59181 **

HARUTUNIAN ENGINEERING INCORPORATED
ENGINEERING AND ENVIRONMENTAL CONSULTANTS
8100 CROSS PARK DRIVE
AUSTIN, TEXAS 78754
TBPE REGISTRATION NO. F-2408

carollo®
TBPELS No. F-882

CITY OF AUSTIN
FOUNDED 1839
CITY OF AUSTIN

CITY OF AUSTIN
WILD HORSE RANCH WWTP EXPANSION
DEMOLITION
FILTER COMPLEX
DUCT BANK SECTIONS - DEMOLITION

VERIFY SCALES
BAR IS ONE INCH ON ORIGINAL DRAWING
0 1"
IF NOT ONE INCH ON THIS SHEET, ADJUST SCALES ACCORDINGLY

JOB NO. 10976A.00
DRAWING NO. 55DE04
SHEET NO. 165 OF 464

Plot Date: 10-OCT-2022 10:40:47 AM
User: LDietzel
Model: Layout1 ColorTable: gshade.ctb DesignScript: Carollo_Std_Pen_v0905.pen PlotScale: 1:1
LAST SAVED BY: ldietzel

GENERAL NOTES:

1. CONTRACTOR SHALL FIELD VERIFY EXISTING CONDITIONS PRIOR TO STARTING WORK.
2. REFER TO SPECIFICATION 01140 - WORK RESTRICTIONS FOR SHUTDOWN REQUIREMENTS.

KEY NOTES:

1 PRESERVE NPW PIPING, HOSE RACK, AND HOSE CONNECTION.

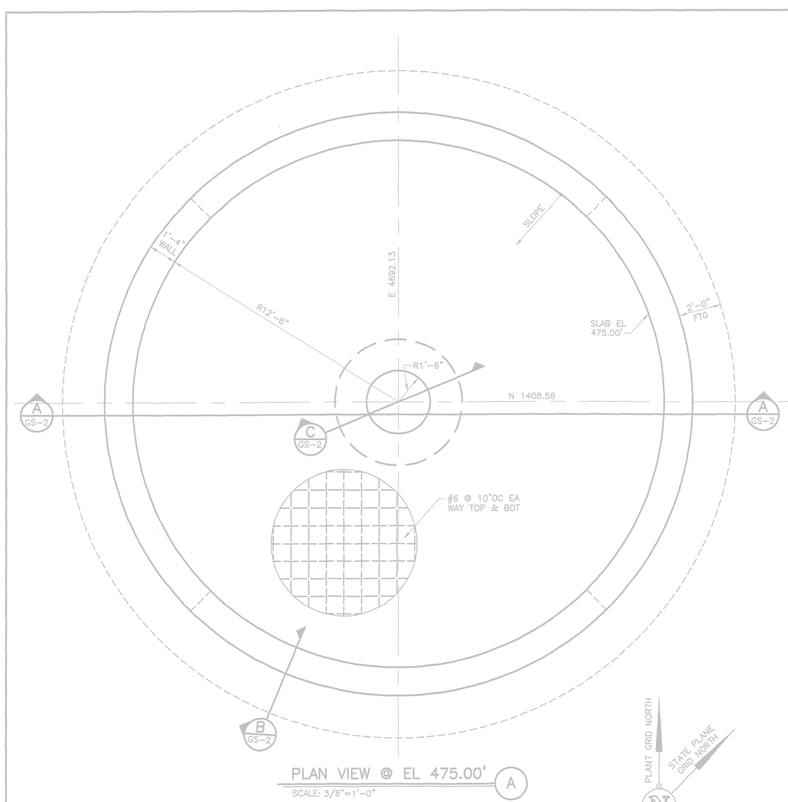

PLAN VIEW @ EL 475.00' (A)
SCALE: 3/8"=1'-0"

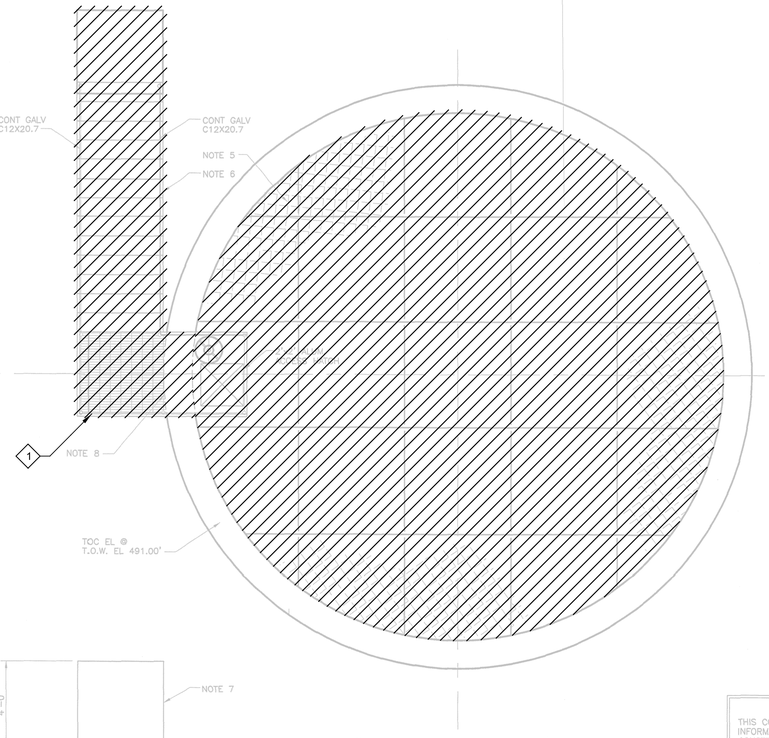

PLAN VIEW @ EL 491.00' (B)
SCALE: 3/8"=1'-0"

NOTES:

1. MAXIMUM LENGTH OF CONCRETE WALL POUR SHALL BE LIMITED TO 50 FT (MEASURE ALONG THE WALL PERIMETER)
2. ALL CONSTRUCTION JOINTS IN FOOTING AND WALLS SHALL HAVE A CONTINUOUS 6" DUMBBELL WATERSTOP.
3. HORIZ SPLICES ARE TO BE STAGGERED. SPLICES SHOULD BE STAGGERED HORIZ BY NOT LESS THAN TWO LAP LENGTHS AND SHOULD NOT COINCIDE IN VERTICAL ARRAYS MORE FREQUENTLY THAN EVERY THIRD BAR.

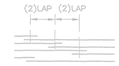

4. WALL TYPE PRESSURE RELIEF VALVES BELOW GRADE (4 TOTAL PER TANK) PRESSURE RELIEF VALVES @ 90° ON CENTER. PER TYP DETAIL 1/SS-7
5. FRP COVER AND SUPPORT MEMBERS ARE TO BE DESIGNED BY SUPPLIER W/ THE FOLLOWING CRITERIA:
   A. LIVE LOAD – 100 PSF
   B. LIMIT DEFLECTION TO 1/4" OR LESS UNDER UNIFORM LOAD OF 100 PSF AND L/360.
   C. FRP PANELS NOT TO EXCEED 4'x8' OR 80 LBS.
   D. FRP CONNECTIONS TO BE DESIGNED AND SUBMITTED TO ENGINEER PRIOR TO CONSTRUCTION.
6. ALL STAIR MEMBERS ARE TO BE GALV – REF SS-8 FOR REQUIRED CONNECTION NFORMATION.
7. 4'-0"x4'-0" CONC STAIR FOUNDATION. REF STAIR FOOTING PLAN FOR LOCATION – REF SS-8 FOR REINF INFORMATION.
8. ATTACH C12x20.7 TO CONCRETE W/ 3-3/4"ø GALV EXPANSION BOLTS @ EQUAL SPACING (6" EMBED).

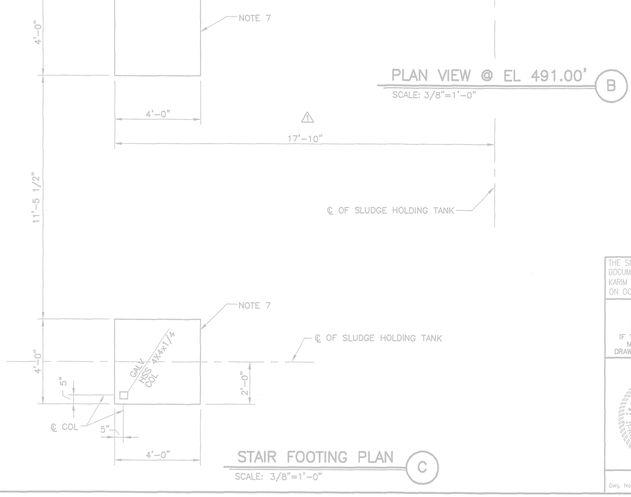

STAIR FOOTING PLAN (C)
SCALE: 3/8"=1'-0"

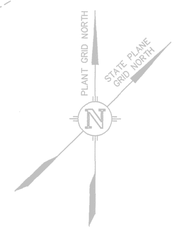

RECORD DRAWING
THIS CONSTRUCTION DOCUMENT WAS PREPARED USING INFORMATION SUPPLIED BY THE CONTRACTOR TO REPRESENT CONSTRUCTION CHANGES. THIS DOCUMENT IS FOR INFORMATION AND REFERENCE IN CONNECTION WITH THE OWNER'S USE AND OCCUPANCY OF THE PROJECT AND IS NOT INTENDED FOR BID, PERMIT OR CONSTRUCTION.
BY: _____ DATE: NOVEMBER 30, 2006

Jose I. Guerra, Inc.
Consulting Engineers
2401 South IH-35 Suite 210
Austin, Texas 78741
(512) 445-2990

NO.	DATE	REVISION	APPROV.
4			
3			
2			
1	11/30/06	RECORD DRAWING	JJL

THE SEAL APPEARING ON THIS DOCUMENT WAS AUTHORIZED BY KARIM F. HELMI, P.E. 90987 ON OCTOBER 27, 2003

WARNING
0 1/2 1
IF THIS BAR DOES NOT MEASURE 1" THEN DRAWING IS NOT TO SCALE

STATE OF TEXAS KARIM F. HELMI 90987 LICENSED PROFESSIONAL ENGINEER

CITY OF AUSTIN, TEXAS
NORTHEAST INTERIM WASTEWATER TREATMENT PLANT
SLUDGE HOLDING TANK PLANS

Turner Collie & Braden Inc.
ENGINEERS • PLANNERS • PROJECT MANAGERS

Unit PUBLIC WORKS	Scale AS NOTED	Date OCTOBER, 2003	
Designed KFH	Checked KFH	Job No. 052-122094-0003	
Drawn FS	Approved KFH	Sheet 148/327	
Dwg. No. GS-1			

THIS CONFORMED DOCUMENT IS RELEASED FOR THE CONVENIENCE OF THE CONTRACTOR UNDER THE AUTHORITY OF:

DANNY M HURTADO, P.E. — 11-01-22 DATE
TX LIC NO. 104266

SEE DISCLAIMER FOR LIMITATIONS OF USE.

CONTRACT DOCUMENTS DATED JUNE 10, 2022, AS PART OF THE BIDDING DOCUMENTS (DRAWINGS AND SPECIFICATIONS) AND SUBSEQUENTLY ISSUED ADDENDA HAVE BEEN MERGED INTO ONE CONFORMING SET OF DOCUMENTS FOR THE CONVENIENCE OF THE CONTRACTOR. IF INCONSISTENCIES OR AMBIGUITIES BETWEEN "CONFORMED" DOCUMENTS AND CONTRACT DOCUMENTS ARE FOUND, THE CONTRACT DOCUMENTS SHALL GOVERN.

REV	DATE	BY	DESCRIPTION
			CONFORMED DOCUMENTS

DESIGNED JPH
DRAWN SDW
CHECKED DMH
DATE NOVEMBER 2022

** ORIGINAL SEALED BY DANNY M. HURTADO 06-10-22 TX PE 104266 **

carollo®
TBPELS No. F-882

CITY OF AUSTIN
FOUNDED 1839

CITY OF AUSTIN

CITY OF AUSTIN
WILD HORSE RANCH WWTP EXPANSION
DEMOLITION
SLUDGE HOLDING TANK NO. 2
SHEET 1 OF 2

VERIFY SCALES
BAR IS ONE INCH ON ORIGINAL DRAWING
0 1"
IF NOT ONE INCH ON THIS SHEET, ADJUST SCALES ACCORDINGLY

JOB NO. 10976A.00
DRAWING NO. 71D01
SHEET NO. 166 OF 464

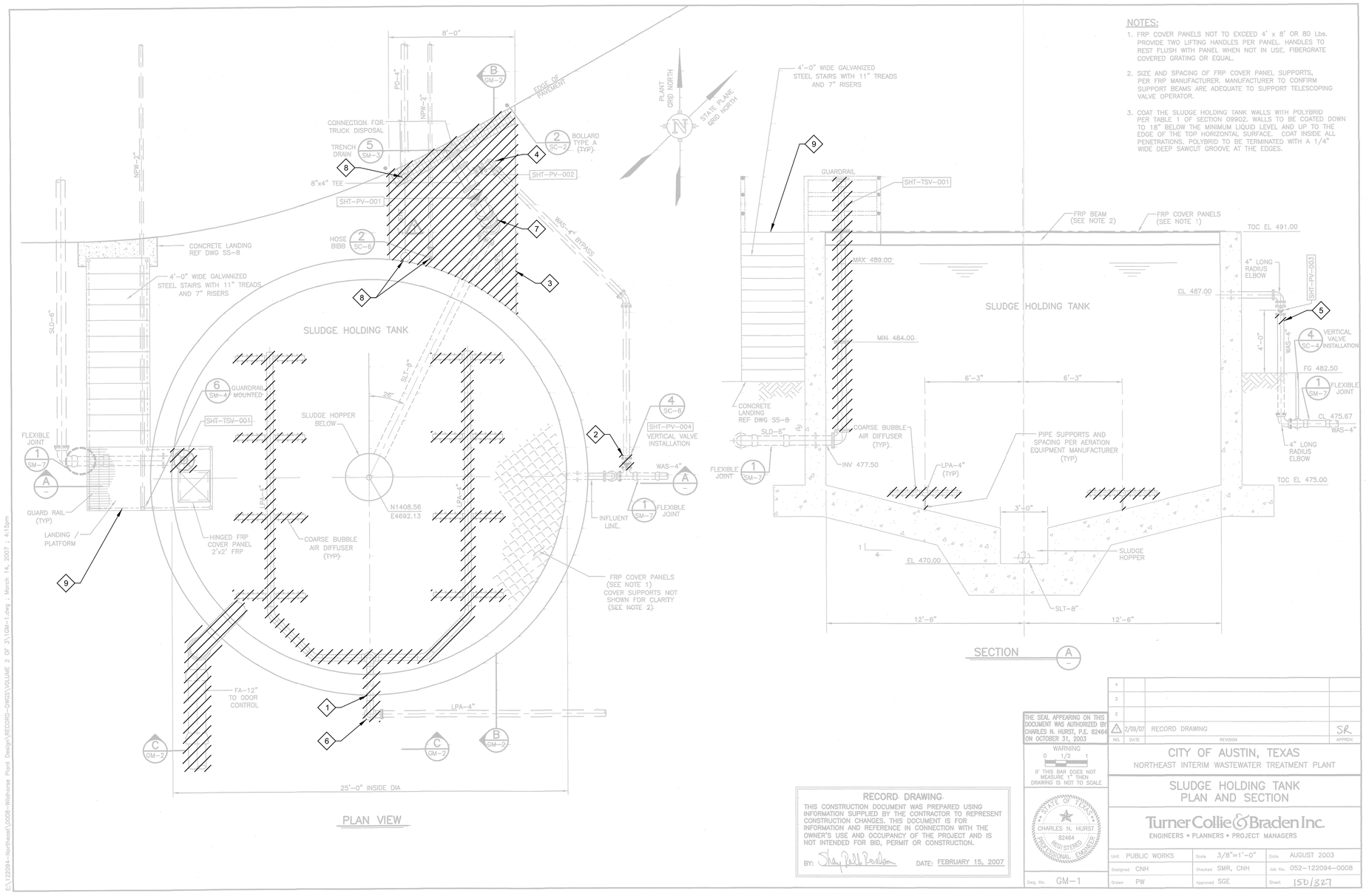

NOTES:

1. FRP COVER PANELS NOT TO EXCEED 4' x 8' OR 80 Lbs. PROVIDE TWO LIFTING HANDLES PER PANEL. HANDLES TO REST FLUSH WITH PANEL WHEN NOT IN USE. FIBERGRATE COVERED GRATING OR EQUAL.
2. SIZE AND SPACING OF FRP COVER PANEL SUPPORTS, PER FRP MANUFACTURER. MANUFACTURER TO CONFIRM SUPPORT BEAMS ARE ADEQUATE TO SUPPORT TELESCOPING VALVE OPERATOR.
3. COAT THE SLUDGE HOLDING TANK WALLS WITH POLYBRID PER TABLE 1 OF SECTION 09902. WALLS TO BE COATED DOWN TO 18" BELOW THE MINIMUM LIQUID LEVEL AND UP TO THE EDGE OF THE TOP HORIZONTAL SURFACE. COAT INSIDE ALL PENETRATIONS. POLYBRID TO BE TERMINATED WITH A 1/4" WIDE DEEP SAWCUT GROOVE AT THE EDGES.

GENERAL NOTES:

1. CONTRACTOR SHALL FIELD VERIFY EXISTING CONDITIONS PRIOR TO STARTING WORK.
2. REFER TO SPECIFICATION 01140 - WORK RESTRICTIONS FOR SHUTDOWN REQUIREMENTS.

KEY NOTES:

1 REFER TO STRUCTURAL SHEETS FOR WALL PENETRATION FILL REQUIREMENTS.

2 REMOVE PLUG VALVE AND CAP PIPE ENDS WITH BLIND FLANGE.

3 REMOVE CONCRETE SLAB AND DRAIN TRENCH AND REPLACE IN KIND.

4 DEMOLISH 4" WAS DOWN TO BELOW CONCRETE SLAB AND ABANDON IN PLACE REMAINDER OF PIPE BY FILLING WITH NON-SHRINK GROUT.

5 REMOVE ENOUGH PIPE FOR INSTALLATION OF FLANGE COUPLING ADAPTOR AND TEE. REFER TO MECHANICAL SHEETS FOR REQUIREMENTS.

6 REMOVE 4" LPA IN ITS ENTIRETY. REFER TO YARD PIPING DEMO SHEETS FOR ADDITIONAL DEMOLITION REQUIREMENTS OF LPA PIPING.

7 REMOVE SLT DOWN TO FLANGE AT GRADE. REFER TO MECHANICAL SHEETS FOR CONNECTION OF NEW PIPE.

8 PRESERVE EXISTING PD, NPW, AND VENT PIPING.

9 STAIRS, RAILING, AND LANDING BEING DEMOLISHED. REFER TO 71D01.

RECORD DRAWING
THIS CONSTRUCTION DOCUMENT WAS PREPARED USING INFORMATION SUPPLIED BY THE CONTRACTOR TO REPRESENT CONSTRUCTION CHANGES. THIS DOCUMENT IS FOR INFORMATION AND REFERENCE IN CONNECTION WITH THE OWNER'S USE AND OCCUPANCY OF THE PROJECT AND IS NOT INTENDED FOR BID, PERMIT OR CONSTRUCTION.
BY: DATE: FEBRUARY 15, 2007

THE SEAL APPEARING ON THIS DOCUMENT WAS AUTHORIZED BY CHARLES N. HURST, P.E. 82464 ON OCTOBER 31, 2003

WARNING
0 1/2 1
IF THIS BAR DOES NOT MEASURE 1" THEN DRAWING IS NOT TO SCALE

STATE OF TEXAS
CHARLES N. HURST
82464
REGISTERED
PROFESSIONAL ENGINEER

NO.	DATE	REVISION	APPROV.
4			
3			
2			
1	2/09/07	RECORD DRAWING	SR

CITY OF AUSTIN, TEXAS
NORTHEAST INTERIM WASTEWATER TREATMENT PLANT

SLUDGE HOLDING TANK
PLAN AND SECTION

Turner Collie & Braden Inc.
ENGINEERS • PLANNERS • PROJECT MANAGERS

Unit PUBLIC WORKS	Scale 3/8"=1'-0"	Date AUGUST 2003	
Designed CNH	Checked SMR, CNH	Job No. 052-122094-0008	
Drawn PW	Approved SGE	Sheet 150/327	
Dwg. No. GM-1			

THIS CONFORMED DOCUMENT IS RELEASED FOR THE CONVENIENCE OF THE CONTRACTOR UNDER THE AUTHORITY OF:

11-01-22
DANNY M HURTADO, P.E. DATE
TX LIC NO. 104266

SEE DISCLAIMER FOR LIMITATIONS OF USE.

CONTRACT DOCUMENTS DATED JUNE 10, 2022, AS PART OF THE BIDDING DOCUMENTS (DRAWINGS AND SPECIFICATIONS) AND SUBSEQUENTLY ISSUED ADDENDA HAVE BEEN MERGED INTO ONE CONFORMING SET OF DOCUMENTS FOR THE CONVENIENCE OF THE CONTRACTOR. IF INCONSISTENCIES OR AMBIGUITIES BETWEEN "CONFORMED" DOCUMENTS AND CONTRACT DOCUMENTS ARE FOUND, THE CONTRACT DOCUMENTS SHALL GOVERN.

REV	DATE	BY	DESCRIPTION
			CONFORMED DOCUMENTS

DESIGNED JPH
DRAWN SDW
CHECKED DMH
DATE NOVEMBER 2022

** ORIGINAL SEALED BY DANNY M. HURTADO 06-10-22 TX PE 104266 **

carollo
TBPELS No. F-882

CITY OF AUSTIN
FOUNDED 1839

CITY OF AUSTIN

CITY OF AUSTIN
WILD HORSE RANCH WWTP EXPANSION
DEMOLITION
SLUDGE HOLDING TANK NO. 2
SHEET 2 OF 2

VERIFY SCALES
BAR IS ONE INCH ON ORIGINAL DRAWING
0 1"
IF NOT ONE INCH ON THIS SHEET, ADJUST SCALES ACCORDINGLY

JOB NO. 10976A.00
DRAWING NO. 71D02
SHEET NO. 167 OF 464

PROJECT NO. 10976A10 FILE NAME: 10976A1071D02.dgn

Plot Date: 10-OCT-2022 10:43:06 AM
User: LDietzel
DesignScript: Carollo_Std_Pen_v0905.pen
PlotScale: 1:1
ColorTable: gshade.ctb
Model: Layout1
LAST SAVED BY: ldietzel
E:\122094-Northeast\0008-Wildhorse Plant Design\RECORD-DWGS\VOLUME 2 OF 3\104-1.dwg - Mirosh 14, 2007 - 4:15pm

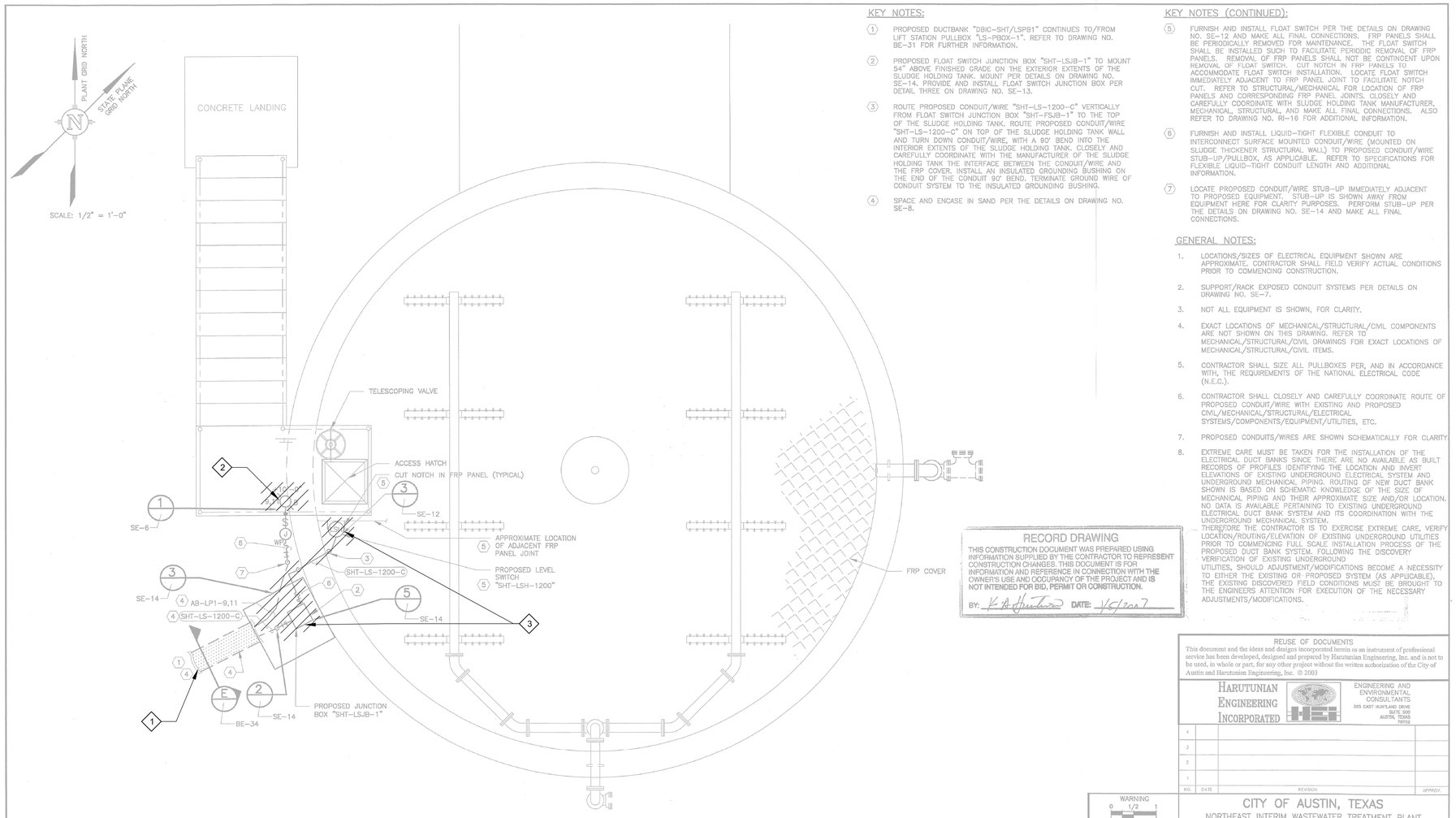

KEY NOTES:

1. PROPOSED DUCTBANK "DBIC-SHT/LSPB1" CONTINUES TO/FROM LIFT STATION PULLBOX "LS-PBOX-1". REFER TO DRAWING NO. BE-31 FOR FURTHER INFORMATION.
2. PROPOSED FLOAT SWITCH JUNCTION BOX "SHT-LSJB-1" TO MOUNT 54" ABOVE FINISHED GRADE ON THE EXTERIOR EXTENTS OF THE SLUDGE HOLDING TANK. MOUNT PER DETAILS ON DRAWING NO. SE-14. PROVIDE AND INSTALL FLOAT SWITCH JUNCTION BOX PER DETAIL THREE ON DRAWING NO. SE-13.
3. ROUTE PROPOSED CONDUIT/WIRE "SHT-LS-1200-C" VERTICALLY FROM FLOAT SWITCH JUNCTION BOX "SHT-FSJB-1" TO THE TOP OF THE SLUDGE HOLDING TANK. ROUTE PROPOSED CONDUIT/WIRE "SHT-LS-1200-C" ON TOP OF THE SLUDGE HOLDING TANK WALL AND TURN DOWN CONDUIT/WIRE, WITH A 90° BEND INTO THE INTERIOR EXTENTS OF THE SLUDGE HOLDING TANK. CLOSELY AND CAREFULLY COORDINATE WITH THE MANUFACTURER OF THE SLUDGE HOLDING TANK THE INTERFACE BETWEEN THE CONDUIT/WIRE AND THE FRP COVER. INSTALL AN INSULATED GROUNDING BUSHING ON THE END OF THE CONDUIT 90° BEND. TERMINATE GROUND WIRE OF CONDUIT SYSTEM TO THE INSULATED GROUNDING BUSHING.
4. SPACE AND ENCASE IN SAND PER THE DETAILS ON DRAWING NO. SE-8.

KEY NOTES (CONTINUED):

5. FURNISH AND INSTALL FLOAT SWITCH PER THE DETAILS ON DRAWING NO. SE-12 AND MAKE ALL FINAL CONNECTIONS. FRP PANELS SHALL BE PERIODICALLY REMOVED FOR MAINTENANCE. THE FLOAT SWITCH SHALL BE INSTALLED SUCH TO FACILITATE PERIODIC REMOVAL OF FRP PANELS. REMOVAL OF FRP PANELS SHALL NOT BE CONTINGENT UPON REMOVAL OF FLOAT SWITCH. CUT NOTCH IN FRP PANELS TO ACCOMMODATE FLOAT SWITCH INSTALLATION. LOCATE FLOAT SWITCH IMMEDIATELY ADJACENT TO FRP PANEL JOINT TO FACILITATE NOTCH CUT. REFER TO STRUCTURAL/MECHANICAL FOR LOCATION OF FRP PANELS AND CORRESPONDING FRP PANEL JOINTS. CLOSELY AND CAREFULLY COORDINATE WITH SLUDGE HOLDING TANK MANUFACTURER, MECHANICAL, STRUCTURAL, AND MAKE ALL FINAL CONNECTIONS. ALSO REFER TO DRAWING NO. RI-16 FOR ADDITIONAL INFORMATION.
6. FURNISH AND INSTALL LIQUID-TIGHT FLEXIBLE CONDUIT TO INTERCONNECT SURFACE MOUNTED CONDUIT/WIRE (MOUNTED ON SLUDGE THICKENER STRUCTURAL WALL) TO PROPOSED CONDUIT/WIRE STUB-UP/PULLBOX, AS APPLICABLE. REFER TO SPECIFICATIONS FOR FLEXIBLE LIQUID-TIGHT CONDUIT LENGTH AND ADDITIONAL INFORMATION.
7. LOCATE PROPOSED CONDUIT/WIRE STUB-UP IMMEDIATELY ADJACENT TO PROPOSED EQUIPMENT. STUB-UP IS SHOWN AWAY FROM EQUIPMENT HERE FOR CLARITY PURPOSES. PERFORM STUB-UP PER THE DETAILS ON DRAWING NO. SE-14 AND MAKE ALL FINAL CONNECTIONS.

GENERAL NOTES:

1. LOCATIONS/SIZES OF ELECTRICAL EQUIPMENT SHOWN ARE APPROXIMATE. CONTRACTOR SHALL FIELD VERIFY ACTUAL CONDITIONS PRIOR TO COMMENCING CONSTRUCTION.
2. SUPPORT/RACK EXPOSED CONDUIT SYSTEMS PER DETAILS ON DRAWING NO. SE-7.
3. NOT ALL EQUIPMENT IS SHOWN, FOR CLARITY.
4. EXACT LOCATIONS OF MECHANICAL/STRUCTURAL/CIVIL COMPONENTS ARE NOT SHOWN ON THIS DRAWING. REFER TO MECHANICAL/STRUCTURAL/CIVIL DRAWINGS FOR EXACT LOCATIONS OF MECHANICAL/STRUCTURAL/CIVIL ITEMS.
5. CONTRACTOR SHALL SIZE ALL PULLBOXES PER, AND IN ACCORDANCE WITH, THE REQUIREMENTS OF THE NATIONAL ELECTRICAL CODE (N.E.C.).
6. CONTRACTOR SHALL CLOSELY AND CAREFULLY COORDINATE ROUTE OF PROPOSED CONDUIT/WIRE WITH EXISTING AND PROPOSED CIVIL/MECHANICAL/STRUCTURAL/ELECTRICAL SYSTEMS/COMPONENTS/EQUIPMENT/UTILITIES, ETC.
7. PROPOSED CONDUITS/WIRES ARE SHOWN SCHEMATICALLY FOR CLARITY
8. EXTREME CARE MUST BE TAKEN FOR THE INSTALLATION OF THE ELECTRICAL DUCT BANKS SINCE THERE ARE NO AVAILABLE AS BUILT RECORDS OF PROFILES IDENTIFYING THE LOCATION AND INVERT ELEVATIONS OF EXISTING UNDERGROUND ELECTRICAL SYSTEM AND UNDERGROUND MECHANICAL PIPING. ROUTING OF NEW DUCT BANK SHOWN IS BASED ON SCHEMATIC KNOWLEDGE OF THE SIZE OF MECHANICAL PIPING AND THEIR APPROXIMATE SIZE AND/OR LOCATION. NO DATA IS AVAILABLE PERTAINING TO EXISTING UNDERGROUND ELECTRICAL DUCT BANK SYSTEM AND ITS COORDINATION WITH THE UNDERGROUND MECHANICAL SYSTEM. THEREFORE THE CONTRACTOR IS TO EXERCISE EXTREME CARE, VERIFY LOCATION/ROUTING/ELEVATION OF EXISTING UNDERGROUND UTILITIES PRIOR TO COMMENCING FULL SCALE INSTALLATION PROCESS OF THE PROPOSED DUCT BANK SYSTEM. FOLLOWING THE DISCOVERY VERIFICATION OF EXISTING UNDERGROUND UTILITIES, SHOULD ADJUSTMENT/MODIFICATIONS BECOME A NECESSITY TO EITHER THE EXISTING OR PROPOSED SYSTEM (AS APPLICABLE), THE EXISTING DISCOVERED FIELD CONDITIONS MUST BE BROUGHT TO THE ENGINEERS ATTENTION FOR EXECUTION OF THE NECESSARY ADJUSTMENTS/MODIFICATIONS.

RECORD DRAWING
THIS CONSTRUCTION DOCUMENT WAS PREPARED USING INFORMATION SUPPLIED BY THE CONTRACTOR TO REPRESENT CONSTRUCTION CHANGES. THIS DOCUMENT IS FOR INFORMATION AND REFERENCE IN CONNECTION WITH THE OWNER'S USE AND OCCUPANCY OF THE PROJECT AND IS NOT INTENDED FOR BID, PERMIT OR CONSTRUCTION.
BY: K.A. Harutunian DATE: 1/6/2023

REFERENCE DRAWINGS:

- BE-31 – ELECTRICAL SITE PLAN
- RE-33 – RE-34 – CONDUIT/WIRE SCHEDULE
- RE-35 – RE-38 – PANEL SCHEDULES
- SE-1 – LIGHTING FIXTURE SCHEDULE

KEY NOTES

1. REFER TO DUCT BANK SECTION DEMOLITION SHEETS [05DE05] THROUGH [05DE08] FOR DEMOLITION DETAILS OF THE DUCT BANK CONTENTS.
2. DISCONNECT AND REMOVE LIGHT FIXTURE, POLE AND SWITCH TO REMAIN AND BE REUSED DURING RENOVATION. REMOVE CABLE/WIRE AND EXPOSED CONDUIT FROM THE POLE TO THE CONDUIT STUB UP. CUT CONDUITS FLUSH WITH EQUIPMENT PAD AND SEAL WITH 50 YEAR NON SHRINK GROUT.
3. DISCONNECT AND REMOVE LEVEL SWITCH AND PULLBOX IN THEIR ENTIRETY

GENERAL NOTES:

1. PRELIMINARY FIELD INVESTIGATIONS INDICATE THAT ADDITIONAL EQUIPMENT HAS BEEN INSTALLED THAT ARE NOT INCORPORATED IN THE RECORD DRAWINGS. DISCONNECT AND REMOVE THE LEVEL INDICATING TRANSMITTER AND DECANT PUMP.
2. ALTHOUGH NOT SHOWN HERE, DISCONNECT AND REMOVE THE DECANT PUMP LOCATED ON THE SLUDGE HOLDING TANK. DISCONNECT AND REMOVE THE CABLE/WIRE SERVING THE DECANT PUMP. CABLE/WIRE ORIGINATES AT THE MAGNESIUM TANK EQUIPMENT RAKE. REFER TO DRAWING NO. [05DE02] FOR ADDITIONAL INFORMATION.

REUSE OF DOCUMENTS
This document and the ideas and designs incorporated herein as an instrument of professional service has been developed, designed and prepared by Harutunian Engineering, Inc. and is not to be used, in whole or part, for any other project without the written authorization of the City of Austin and Harutunian Engineering, Inc. © 2003

HARUTUNIAN ENGINEERING INCORPORATED
ENGINEERING AND ENVIRONMENTAL CONSULTANTS
305 EAST HUNTLAND DRIVE SUITE 500 AUSTIN, TEXAS 78752

NO.	DATE	REVISION	APPROV.
4			
3			
2			
1			

WARNING
0 1/2 1
IF THIS BAR DOES NOT MEASURE 1" THEN DRAWING IS NOT TO SCALE

K. A. HARUTUNIAN 59181 REGISTERED PROFESSIONAL ENGINEER STATE OF TEXAS
10/15/2003

CITY OF AUSTIN, TEXAS
NORTHEAST INTERIM WASTEWATER TREATMENT PLANT

AERATED SLUDGE POWER, I&C, LIGHTING, AND AUXILIARY SYSTEMS PLAN

Turner Collie & Braden Inc.
ENGINEERS • PLANNERS • PROJECT MANAGERS

Unit PUBLIC WORKS	Scale 1/2"=1'-0"	Date OCTOBER 2003	
Designed HEI	Checked HEI	Job No. 052-122094-0008	
Drawn HEI	Approved HEI	Sheet 152/327	
Dwg. No. GE-1			

THIS CONFORMED DOCUMENT IS RELEASED FOR THE CONVENIENCE OF THE CONTRACTOR UNDER THE AUTHORITY OF:

K. A. Harutunian — 11-01-22
K. A. HARUTUNIAN, P.E. — DATE
TX LIC NO. 59181

SEE DISCLAIMER FOR LIMITATIONS OF USE.

CONTRACT DOCUMENTS DATED FEBRUARY 28, 2022, AS PART OF THE BIDDING DOCUMENTS (DRAWINGS AND SPECIFICATIONS) AND SUBSEQUENTLY ISSUED ADDENDA HAVE BEEN MERGED INTO ONE CONFORMING SET OF DOCUMENTS FOR THE CONVENIENCE OF THE CONTRACTOR. IF INCONSISTENCIES OR AMBIGUITIES BETWEEN "CONFORMED" DOCUMENTS AND CONTRACT DOCUMENTS ARE FOUND, THE CONTRACT DOCUMENTS SHALL GOVERN.

This document, and the designs incorporated herein, is an instrument of professional service that has been developed, designed and prepared by Harutunian Engineering, Inc., and is not to be used, in whole or in part, for any other project without giving written notice to Harutunian Engineering, Inc.

REV	DATE	BY	DESCRIPTION
			CONFORMED DOCUMENTS

DESIGNED HEI
DRAWN HEI
CHECKED HEI
DATE NOVEMBER 2022

** ORIGINAL SEALED BY K.A. HARUTUNIAN 02-28-22 TX PE 59181 **

HARUTUNIAN ENGINEERING INCORPORATED
ENGINEERING AND ENVIRONMENTAL CONSULTANTS
8100 CROSS PARK DRIVE AUSTIN, TEXAS 78754 TBPE REGISTRATION NO. F-2408

carollo® TBPELS No. F-882

CITY OF AUSTIN FOUNDED 1839 CITY OF AUSTIN

CITY OF AUSTIN
WILD HORSE RANCH WWTP EXPANSION
DEMOLITION
SLUDGE HOLDING TANK
POWER, AUXILIARY, AND I&C PLAN - DEMOLITION

VERIFY SCALES
BAR IS ONE INCH ON ORIGINAL DRAWING
0 1"
IF NOT ONE INCH ON THIS SHEET, ADJUST SCALES ACCORDINGLY

JOB NO. 10976A.00
DRAWING NO. 71DE01
SHEET NO. 168 OF 464

Plot Date: 10-OCT-2022 10:45:46 AM
User: LDietzel
Model: Layout1 ColorTable: gshade.ctb DesignScript: Carollo_Std_Pen_v0905.pen PlotScale: 1:1
LAST SAVED BY: ldietzel

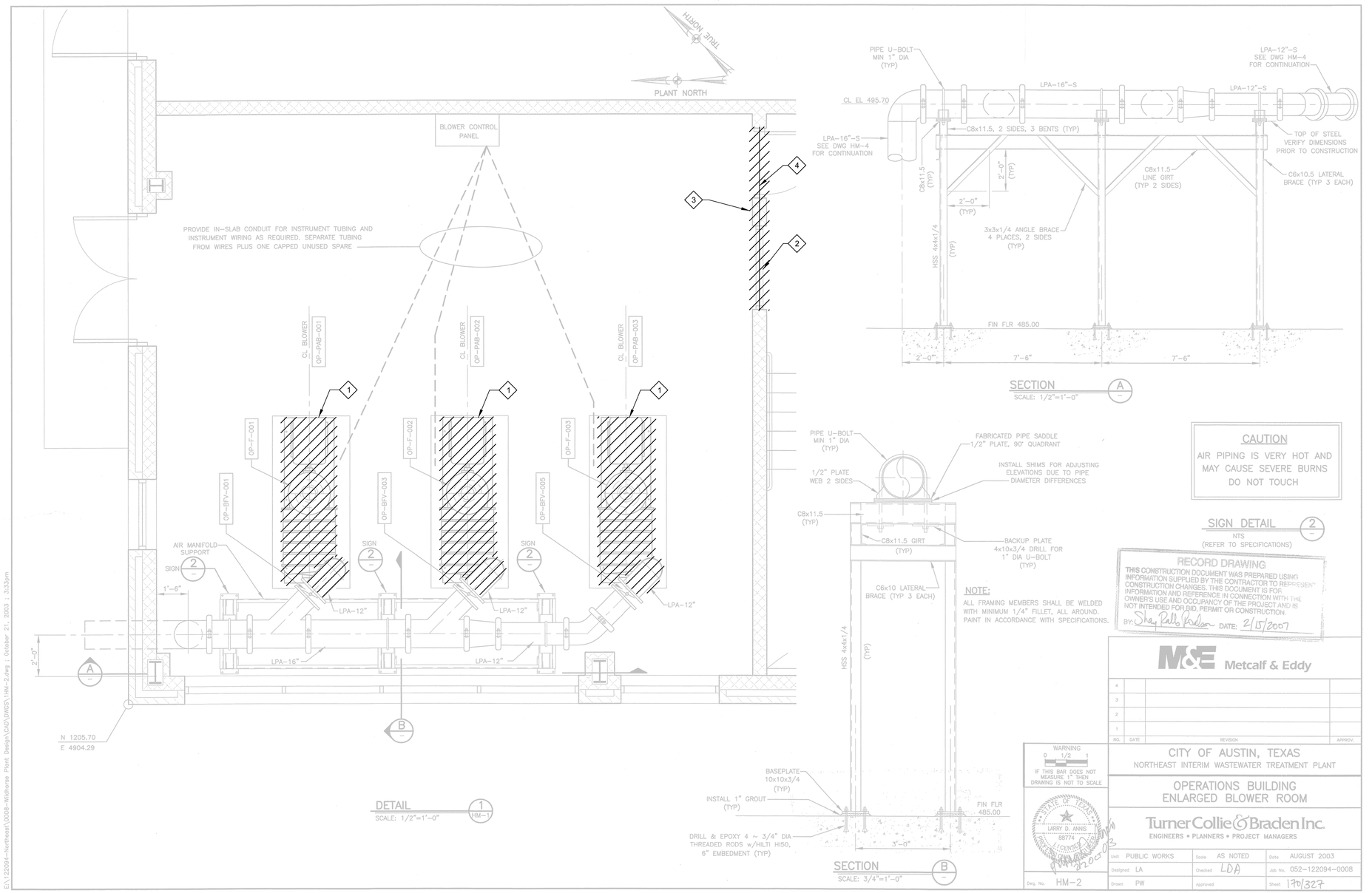

GENERAL NOTES:

1. CONTRACTOR SHALL FIELD VERIFY EXISTING CONDITIONS PRIOR TO STARTING WORK.
2. UNINTERRUPTED PROCESS AIR SUPPLY IS REQUIRED DURING CONSTRUCTION. ANY PROCESS AIR SHUTDOWNS SHALL BE COORDINATED WITH PLANT STAFF. REFER TO SPECIFICATION 01140 - WORK RESTRICTIONS.

KEY NOTES:

1 BLOWER PADS SHALL BE PRESERVED FOR INSTALLATION OF NEW BLOWERS.

2 REMOVE DOOR AND WINDOW FOR INSTALLATION OF NEW DOUBLE DOOR. REFER TO STRUCTURAL DRAWINGS FOR REQUIREMENTS.

3 EXISTING EXIT SIGN TO BE RELOCATED. REFER TO STRUCTURAL DRAWINGS FOR REQUIREMENTS.

4 CONTRACTOR SHALL PROVIDE TEMPORARY SHORING/BRACING BELOW BOND BEAM PRIOR TO WALL DEMOLITION. TEMPORARY SHORING TO REMAIN UNTIL NEW WALL HAS BEEN PLACED IN ITS ENTIRETY AND ALL CMU HAS REACHED ITS DESIGN STRENGTH. CONTRACTOR TO DESIGN TEMPORARY BRACING. SUBMIT FOR FILES CALCULATIONS FOR TEMPORARY BRACING STAMPED BY ENGINEER REGISTERED IN THE STATE OF TEXAS.

RECORD DRAWING
THIS CONSTRUCTION DOCUMENT WAS PREPARED USING INFORMATION SUPPLIED BY THE CONTRACTOR TO REPRESENT CONSTRUCTION CHANGES. THIS DOCUMENT IS FOR INFORMATION AND REFERENCE IN CONNECTION WITH THE OWNER'S USE AND OCCUPANCY OF THE PROJECT AND IS NOT INTENDED FOR BID, PERMIT OR CONSTRUCTION.
BY: Shay Pattillo Madison DATE: 2/15/2007

Metcalf & Eddy

NO.	DATE	REVISION	APPROV.
4			
3			
2			
1			

WARNING 0 1/2 1
IF THIS BAR DOES NOT MEASURE 1" THEN DRAWING IS NOT TO SCALE

STATE OF TEXAS LARRY D. ANNIS 68774 LICENSED PROFESSIONAL ENGINEER 8/20/03

CITY OF AUSTIN, TEXAS
NORTHEAST INTERIM WASTEWATER TREATMENT PLANT
OPERATIONS BUILDING
ENLARGED BLOWER ROOM
Turner Collie & Braden Inc.
ENGINEERS • PLANNERS • PROJECT MANAGERS

Unit PUBLIC WORKS	Scale AS NOTED	Date AUGUST 2003	
Designed LA	Checked LDA	Job No. 052-122094-0008	
Drawn PW	Approved	Sheet 170/327	

Dwg. No. HM-2

THIS CONFORMED DOCUMENT IS RELEASED FOR THE CONVENIENCE OF THE CONTRACTOR UNDER THE AUTHORITY OF:

11-01-22
DANNY M HURTADO, P.E. DATE
TX LIC NO. 104266

SEE DISCLAIMER FOR LIMITATIONS OF USE.

CONTRACT DOCUMENTS DATED JUNE 10, 2022, AS PART OF THE BIDDING DOCUMENTS (DRAWINGS AND SPECIFICATIONS) AND SUBSEQUENTLY ISSUED ADDENDA HAVE BEEN MERGED INTO ONE CONFORMING SET OF DOCUMENTS FOR THE CONVENIENCE OF THE CONTRACTOR. IF INCONSISTENCIES OR AMBIGUITIES BETWEEN "CONFORMED" DOCUMENTS AND CONTRACT DOCUMENTS ARE FOUND, THE CONTRACT DOCUMENTS SHALL GOVERN.

REV	DATE	BY	DESCRIPTION
			CONFORMED DOCUMENTS

DESIGNED JPH
DRAWN SDW
CHECKED DMH
DATE NOVEMBER 2022

** ORIGINAL SEALED BY DANNY M. HURTADO 06-10-22 TX PE 104266 **

carollo® TBPELS No. F-882

CITY OF AUSTIN FOUNDED 1839

CITY OF AUSTIN

CITY OF AUSTIN
WILD HORSE RANCH WWTP EXPANSION
DEMOLITION
OPERATIONS BUILDING

VERIFY SCALES
BAR IS ONE INCH ON ORIGINAL DRAWING
0 1"
IF NOT ONE INCH ON THIS SHEET, ADJUST SCALES ACCORDINGLY

JOB NO. 10976A.00
DRAWING NO. 80D01
SHEET NO. 169 OF 464

PROJECT NO. 10976A10 FILE NAME: 10976A1080D01.dgn
E:\122094-Northeast\0008-Wilshorse Plant Design\CAD\DWGS\1HM-2.dwg - October 21, 2003 - 3:33pm

480V MOTOR CONTROL CENTER "OP-MCC-01L" (1)

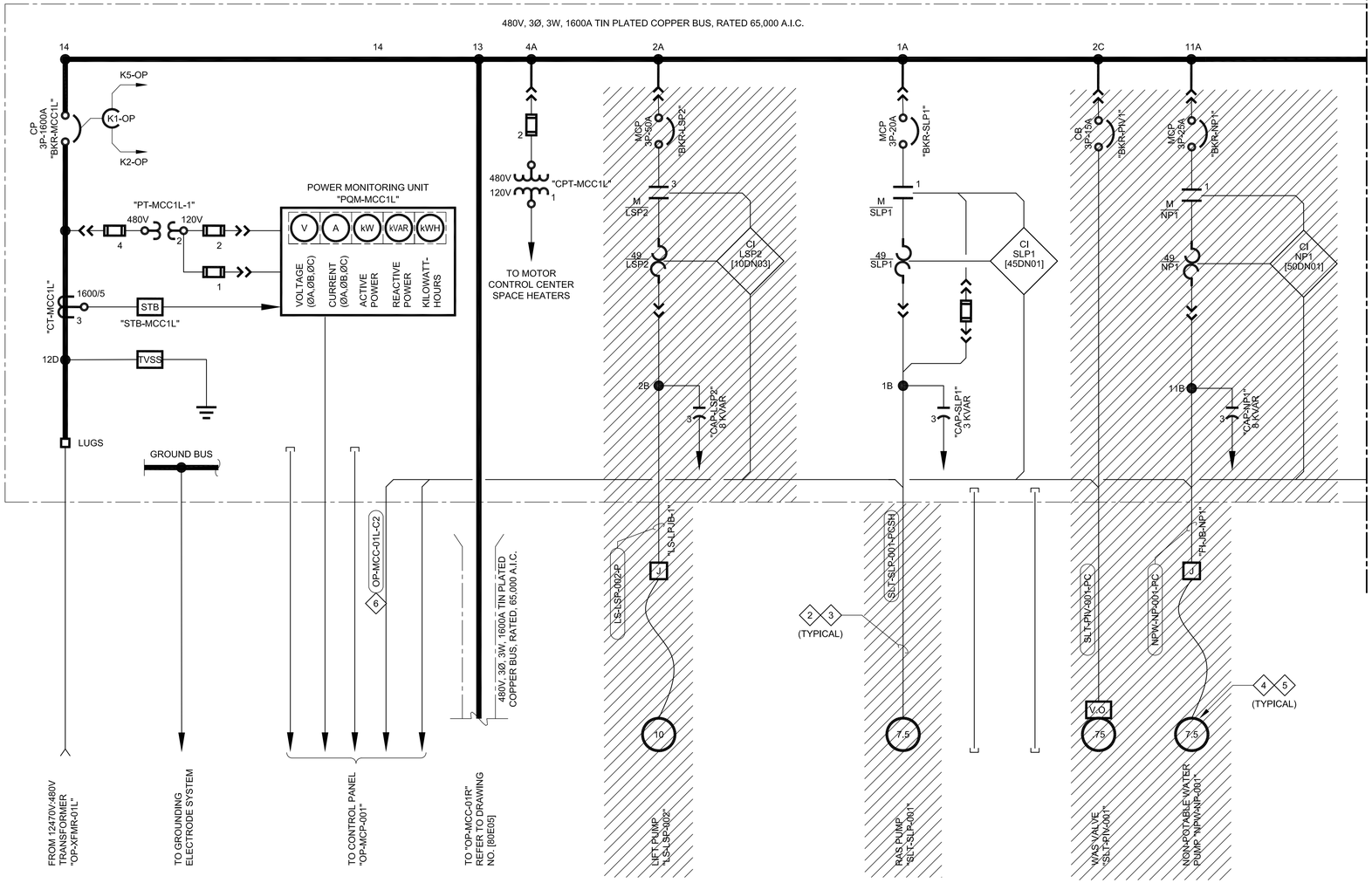

KEY NOTES

1. EXISTING 480V MOTOR CONTROL CENTER MANUFACTURED BY "GE", MODEL NO. "E9000", ML NO. "0C61X0154L01"
2. CONDUIT CONTAINS POWER AND/OR CONTROL CABLES. DISCONNECT AND REMOVE EXISTING POWER CABLE/WIRE IN ITS ENTIRETY. DISCONNECT CONTROL CABLE/WIRE AND PULL INTO MCC. LEAVING 50 FT OF WIRE TO BE USED AS SPARE.
3. DISCONNECT AND REMOVE EXPOSED CONDUIT/RACEWAY. REFER TO FLOOR PLANS FOR ADDITIONAL INFORMATION.
4. DISCONNECT AND REMOVE EQUIPMENT IN ITS ENTIRETY. COORDINATE WITH MECHANICAL.
5. EQUIPMENT TAGS TO BE REMOVED AND REPLACED DURING RENOVATION ACTIVITIES.
6. DISCONNECT AND REMOVE CABLE/WIRE IN ITS ENTIRETY.

THIS CONFORMED DOCUMENT IS RELEASED FOR THE CONVENIENCE OF THE CONTRACTOR UNDER THE AUTHORITY OF:

K. A. Harutunian — 11-01-22

K. A. HARUTUNIAN, P.E. — DATE
TX LIC NO. 59181

SEE DISCLAIMER FOR LIMITATIONS OF USE.

CONTRACT DOCUMENTS DATED FEBRUARY 28, 2022, AS PART OF THE BIDDING DOCUMENTS (DRAWINGS AND SPECIFICATIONS) AND SUBSEQUENTLY ISSUED ADDENDA HAVE BEEN MERGED INTO ONE CONFORMING SET OF DOCUMENTS FOR THE CONVENIENCE OF THE CONTRACTOR. IF INCONSISTENCIES OR AMBIGUITIES BETWEEN "CONFORMED" DOCUMENTS AND CONTRACT DOCUMENTS ARE FOUND, THE CONTRACT DOCUMENTS SHALL GOVERN.

This document, and the designs incorporated herein, is an instrument of professional service that has been developed, designed and prepared by Harutunian Engineering, Inc., and is not to be used, in whole or in part, for any other project without giving written notice to Harutunian Engineering, Inc.

REV	DATE	BY	DESCRIPTION
			CONFORMED DOCUMENTS

DESIGNED HEI
DRAWN HEI
CHECKED HEI
DATE NOVEMBER 2022

** ORIGINAL SEALED BY K.A. HARUTUNIAN 02-28-22 TX PE 59181 **

HARUTUNIAN ENGINEERING INCORPORATED
ENGINEERING AND ENVIRONMENTAL CONSULTANTS
8100 CROSS PARK DRIVE
AUSTIN, TEXAS 78754
TBPE REGISTRATION NO. F-2408
carollo
TBPELS No. F-882
CITY OF AUSTIN
FOUNDED 1839
CITY OF AUSTIN

CITY OF AUSTIN
WILD HORSE RANCH WWTP EXPANSION
DEMOLITION
OPERATIONS BUILDING 480V DETAILED ONE-LINE DIAGRAM - DEMOLITION - 1

VERIFY SCALES
BAR IS ONE INCH ON ORIGINAL DRAWING
0 1"
IF NOT ONE INCH ON THIS SHEET, ADJUST SCALES ACCORDINGLY

JOB NO. 10976A.00
DRAWING NO. 80DE01
SHEET NO. 170 OF 464

480V MOTOR CONTROL CENTER "OP-MCC-01L" ◇1

480V, 3Ø, 3W, 1600A TIN PLATED COPPER BUS, RATED 65,000 A.I.C.

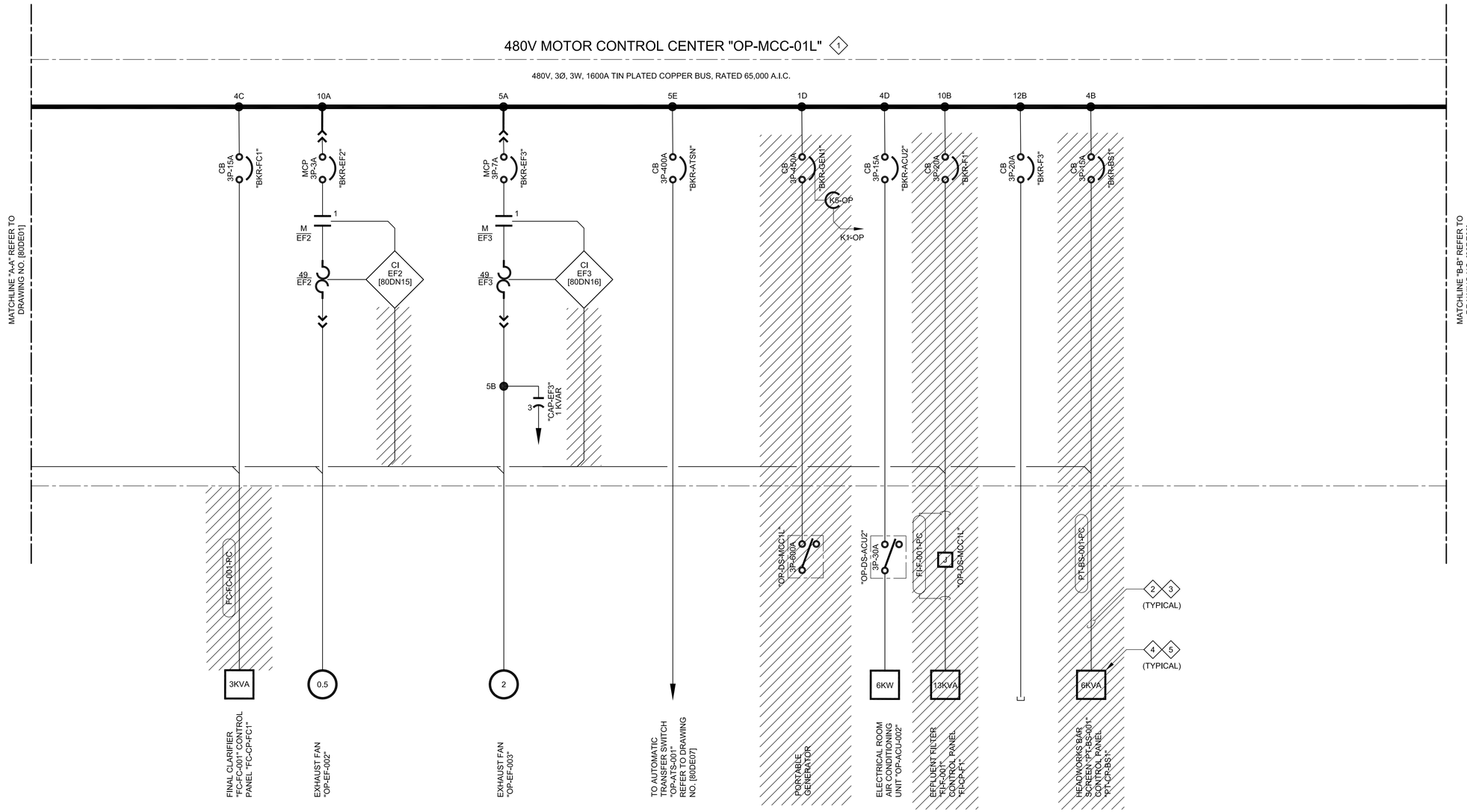

◇# KEY NOTES

1. EXISTING 480V MOTOR CONTROL CENTER MANUFACTURED BY "GE", MODEL NO. "E9000", ML NO. "0C61X0154L01
2. CONDUIT CONTAINS POWER AND/OR CONTROL CABLES. DISCONNECT AND REMOVE EXISTING POWER CABLE/WIRE IN ITS ENTIRETY. DISCONNECT CONTROL CABLE/WIRE AND PULL INTO MCC. LEAVING 50 FT OF WIRE TO BE USED AS SPARE.
3. DISCONNECT AND REMOVE EXPOSED CONDUIT/RACEWAY. REFER TO FLOOR PLANS FOR ADDITIONAL INFORMATION.
4. DISCONNECT AND REMOVE EQUIPMENT IN ITS ENTIRETY. COORDINATE WITH MECHANICAL.
5. EQUIPMENT TAGS TO BE REMOVED AND REPLACED DURING RENOVATION ACTIVITIES.

THIS CONFORMED DOCUMENT IS RELEASED FOR THE CONVENIENCE OF THE CONTRACTOR UNDER THE AUTHORITY OF:

K. A. Harutunian — 11-01-22

K. A. HARUTUNIAN, P.E. — DATE
TX LIC NO. 59181

SEE DISCLAIMER FOR LIMITATIONS OF USE.

CONTRACT DOCUMENTS DATED FEBRUARY 28, 2022, AS PART OF THE BIDDING DOCUMENTS (DRAWINGS AND SPECIFICATIONS) AND SUBSEQUENTLY ISSUED ADDENDA HAVE BEEN MERGED INTO ONE CONFORMING SET OF DOCUMENTS FOR THE CONVENIENCE OF THE CONTRACTOR. IF INCONSISTENCIES OR AMBIGUITIES BETWEEN "CONFORMED" DOCUMENTS AND CONTRACT DOCUMENTS ARE FOUND, THE CONTRACT DOCUMENTS SHALL GOVERN.

This document, and the designs incorporated herein, is an instrument of professional service that has been developed, designed and prepared by Harutunian Engineering, Inc., and is not to be used, in whole or in part, for any other project without giving written notice to Harutunian Engineering, Inc.

REV	DATE	BY	DESCRIPTION
			CONFORMED DOCUMENTS

DESIGNED HEI
DRAWN HEI
CHECKED HEI
DATE NOVEMBER 2022

** ORIGINAL SEALED BY K.A. HARUTUNIAN 02-28-22 TX PE 59181 **

HARUTUNIAN ENGINEERING INCORPORATED
ENGINEERING AND ENVIRONMENTAL CONSULTANTS
8100 CROSS PARK DRIVE
AUSTIN, TEXAS 78754
TBPE REGISTRATION NO. F-2408

carollo
TBPELS No. F-882

CITY OF AUSTIN
FOUNDED 1839
CITY OF AUSTIN

CITY OF AUSTIN
WILD HORSE RANCH WWTP EXPANSION
DEMOLITION
OPERATIONS BUILDING 480V DETAILED ONE-LINE DIAGRAM - DEMOLITION - 2

VERIFY SCALES
BAR IS ONE INCH ON ORIGINAL DRAWING
0 — 1"
IF NOT ONE INCH ON THIS SHEET, ADJUST SCALES ACCORDINGLY

JOB NO. 10976A.00
DRAWING NO. 80DE02
SHEET NO. 171 OF 464

480V MOTOR CONTROL CENTER "OP-MCC-01L" (1)

480V, 3Ø, 3W, 1600A TIN PLATED COPPER BUS, RATED 65,000 A.I.C.

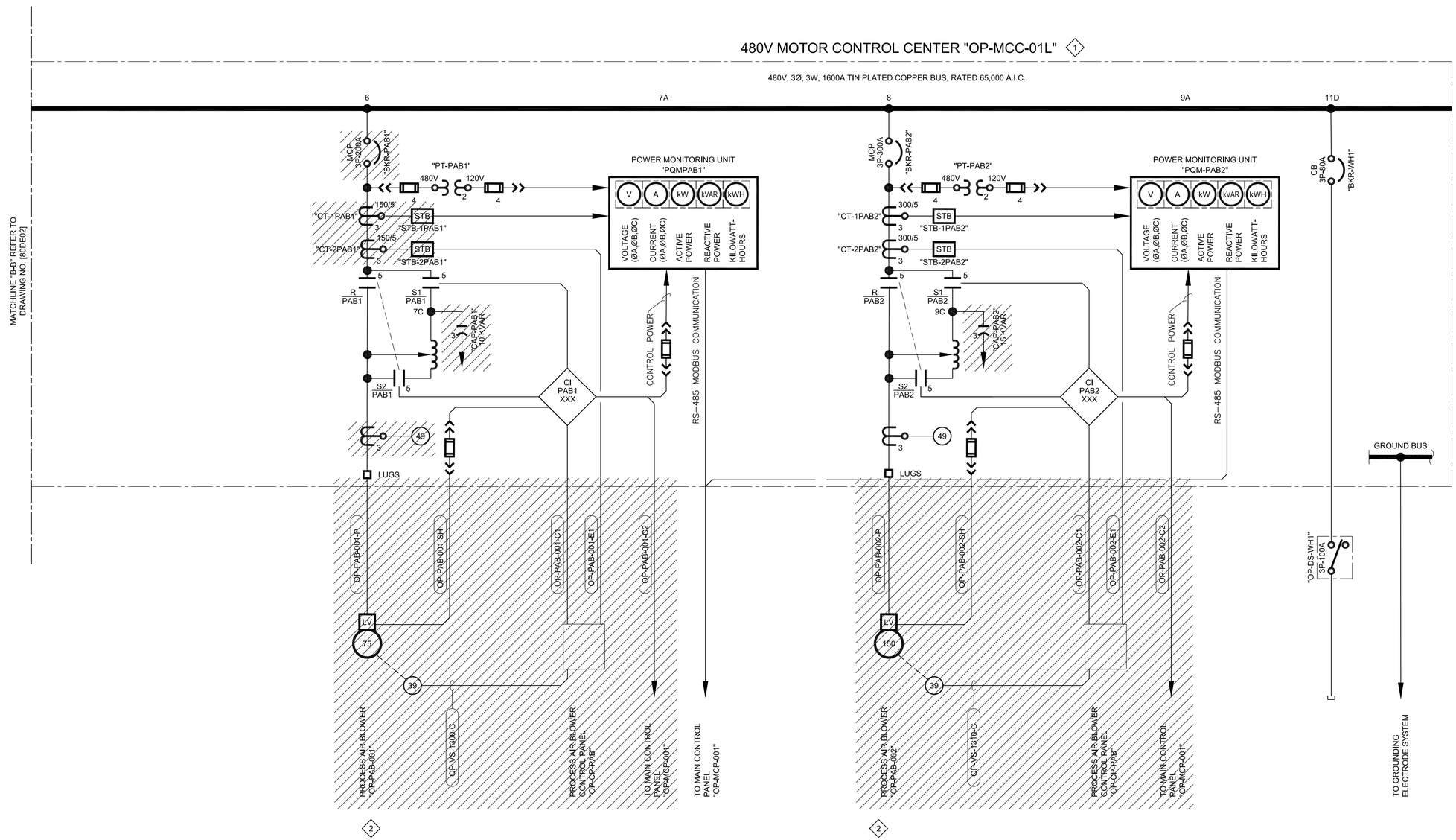

KEY NOTES

1. EXISTING 480V MOTOR CONTROL CENTER MANUFACTURED BY "GE", MODEL NO. "E9000", ML NO. "0C61X0154L01
2. DISCONNECT AND REMOVE EQUIPMENT IN ITS ENTIRETY. COORDINATE WITH MECHANICAL.

THIS CONFORMED DOCUMENT IS RELEASED FOR THE CONVENIENCE OF THE CONTRACTOR UNDER THE AUTHORITY OF:

K. A. HARUTUNIAN, P.E.
TX LIC NO. 59181

11-01-22
DATE

SEE DISCLAIMER FOR LIMITATIONS OF USE.

CONTRACT DOCUMENTS DATED FEBRUARY 28, 2022, AS PART OF THE BIDDING DOCUMENTS (DRAWINGS AND SPECIFICATIONS) AND SUBSEQUENTLY ISSUED ADDENDA HAVE BEEN MERGED INTO ONE CONFORMING SET OF DOCUMENTS FOR THE CONVENIENCE OF THE CONTRACTOR. IF INCONSISTENCIES OR AMBIGUITIES BETWEEN "CONFORMED" DOCUMENTS AND CONTRACT DOCUMENTS ARE FOUND, THE CONTRACT DOCUMENTS SHALL GOVERN.

This document, and the designs incorporated herein, is an instrument of professional service that has been developed, designed and prepared by Harutunian Engineering, Inc., and is not to be used, in whole or in part, for any other project without giving written notice to Harutunian Engineering, Inc.

REV	DATE	BY	DESCRIPTION
			CONFORMED DOCUMENTS

DESIGNED HEI
DRAWN HEI
CHECKED HEI
DATE NOVEMBER 2022

** ORIGINAL SEALED BY K.A. HARUTUNIAN 02-28-22 TX PE 59181 **

HARUTUNIAN ENGINEERING INCORPORATED
ENGINEERING AND ENVIRONMENTAL CONSULTANTS
8100 CROSS PARK DRIVE
AUSTIN, TEXAS 78754
TBPE REGISTRATION NO. F-2408

carollo
TBPELS No. F-882

CITY OF AUSTIN
FOUNDED 1839

CITY OF AUSTIN

CITY OF AUSTIN
WILD HORSE RANCH WWTP EXPANSION
DEMOLITION
OPERATIONS BUILDING 480V DETAILED ONE-LINE DIAGRAM - DEMOLITION - 3

VERIFY SCALES
BAR IS ONE INCH ON ORIGINAL DRAWING
0 1"
IF NOT ONE INCH ON THIS SHEET, ADJUST SCALES ACCORDINGLY

JOB NO. 10976A.00
DRAWING NO. 80DE03
SHEET NO. 172 OF 464

480V MOTOR CONTROL CENTER "OP-MCC-01R" (1)

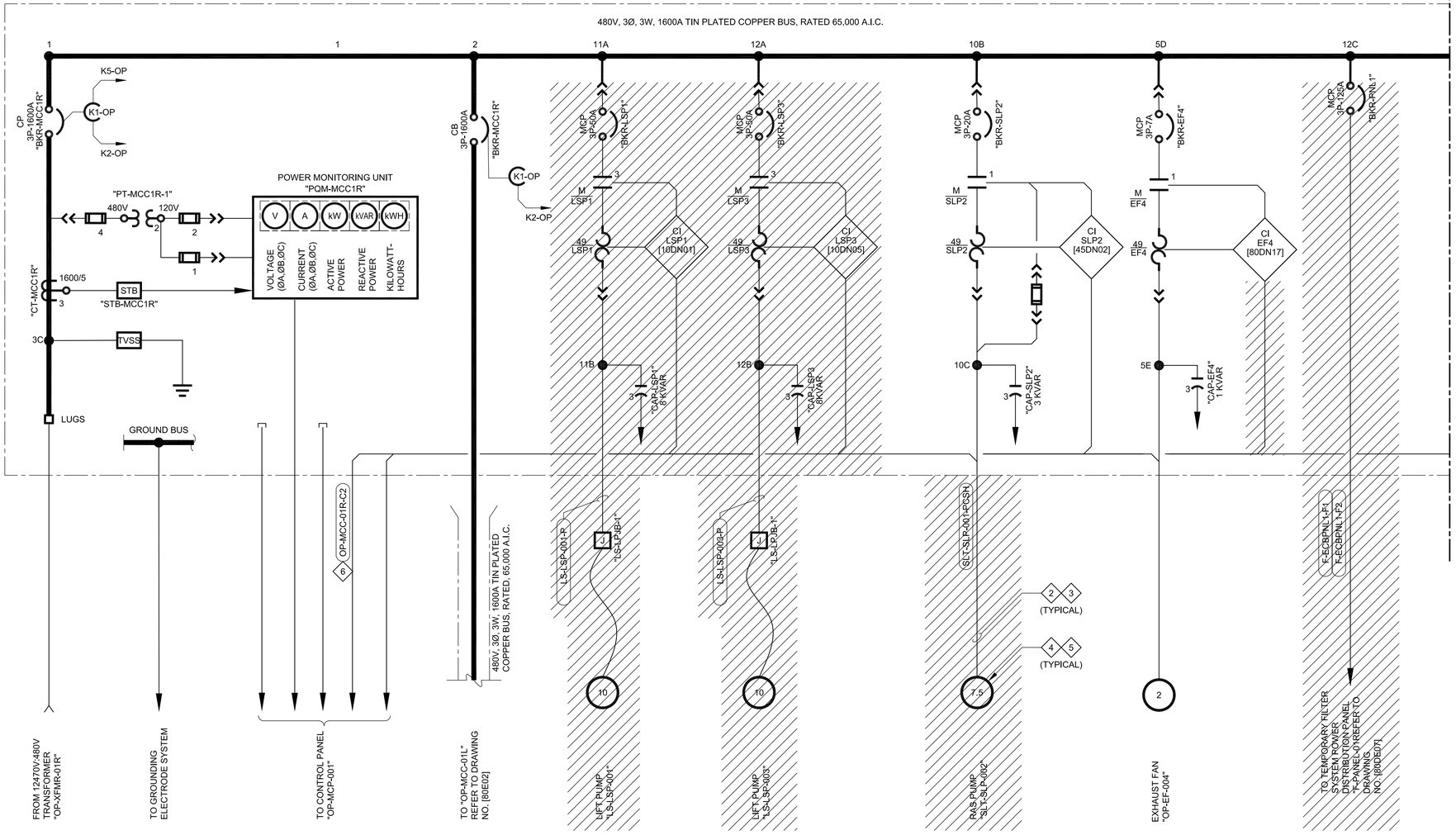

KEY NOTES

1. EXISTING 480V MOTOR CONTROL CENTER MANUFACTURED BY "GE", MODEL NO. "E9000", ML NO. "0C61X0154L02".
2. CONDUIT CONTAINS POWER AND/OR CONTROL CABLES. DISCONNECT AND REMOVE EXISTING POWER CABLE/WIRE IN ITS ENTIRETY. DISCONNECT CONTROL CABLE/WIRE AND PULL INTO MCC. LEAVING 50 FT OF WIRE TO BE USED AS SPARE.
3. DISCONNECT AND REMOVE EXPOSED CONDUIT/RACEWAY. REFER TO FLOOR PLANS FOR ADDITIONAL INFORMATION.
4. DISCONNECT AND REMOVE EQUIPMENT IN ITS ENTIRETY. COORDINATE WITH MECHANICAL.
5. EQUIPMENT TAGS TO BE REMOVED AND REPLACED DURING RENOVATION ACTIVITIES.
6. DISCONNECT AND REMOVE CABLE/WIRE IN ITS ENTIRETY.

THIS CONFORMED DOCUMENT IS RELEASED FOR THE CONVENIENCE OF THE CONTRACTOR UNDER THE AUTHORITY OF:

K. A. HARUTUNIAN, P.E. — 11-01-22
TX LIC NO. 59181 — DATE

SEE DISCLAIMER FOR LIMITATIONS OF USE.

CONTRACT DOCUMENTS DATED FEBRUARY 28, 2022, AS PART OF THE BIDDING DOCUMENTS (DRAWINGS AND SPECIFICATIONS) AND SUBSEQUENTLY ISSUED ADDENDA HAVE BEEN MERGED INTO ONE CONFORMING SET OF DOCUMENTS FOR THE CONVENIENCE OF THE CONTRACTOR. IF INCONSISTENCIES OR AMBIGUITIES BETWEEN "CONFORMED" DOCUMENTS AND CONTRACT DOCUMENTS ARE FOUND, THE CONTRACT DOCUMENTS SHALL GOVERN.

This document, and the designs incorporated herein, is an instrument of professional service that has been developed, designed and prepared by Harutunian Engineering, Inc., and is not to be used, in whole or in part, for any other project without giving written notice to Harutunian Engineering, Inc.

REV	DATE	BY	DESCRIPTION
			CONFORMED DOCUMENTS

DESIGNED HEI | DRAWN HEI | CHECKED HEI | DATE NOVEMBER 2022

** ORIGINAL SEALED BY K.A. HARUTUNIAN 02-28-22 TX PE 59181 **

HARUTUNIAN ENGINEERING INCORPORATED
ENGINEERING AND ENVIRONMENTAL CONSULTANTS
8100 CROSS PARK DRIVE
AUSTIN, TEXAS 78754
TBPE REGISTRATION NO. F-2408

carollo
TBPELS No. F-882

CITY OF AUSTIN
FOUNDED 1839

CITY OF AUSTIN

WILD HORSE RANCH WWTP EXPANSION

DEMOLITION

OPERATIONS BUILDING 480V DETAILED ONE-LINE DIAGRAM - DEMOLITION - 4

VERIFY SCALES
BAR IS ONE INCH ON ORIGINAL DRAWING
0 — 1"
IF NOT ONE INCH ON THIS SHEET, ADJUST SCALES ACCORDINGLY

JOB NO. 10976A.00
DRAWING NO. 80DE04
SHEET NO. 173 OF 464

480V MOTOR CONTROL CENTER "OP-MCC-01R" ◇1

480V, 3Ø, 3W, 1600A TIN PLATED COPPER BUS, RATED 65,000 A.I.C.

11C 10A 4E 12C 8E 4C 5A 4E 10D 9B

MCP 3P-25A "BKR-NP2" | CB 3P-15A "BKR-FC2" | CB 3P-20A "BKR-OCE1" | CB 3P-20A "BKR-UH1" | CB 3P-200A "BKR-FBP" | CB 3P-400A "BKR-ATSE" | CB 3P-20A "BKR-P2" | CB 3P-20A "BKR-F4" | CB 3P-15A "BKR-OPH1" | CB 3P-15A "BKR-LSH1" | CB "BKR-WAS"

MATCHLINE "A-A" REFER TO DRAWING NO. [80DE04]

MATCHLINE "B-B" REFER TO DRAWING NO. [80DE06]

M NP2 | 49 NP2 | CI NP2 [50DN02] | 4B | CR-NP2" 3 KVAR

NPW-MP-002-PC | "FLJB-NP2" | FC-FC-002-PC | BF-OCE-001-PC | "OP-DS-UH1" | FLF-002-PC | "FLJB-F2" | "OP-DS-H1" | LS-H-001-P | "LS-DS-H1" 3P-30A | (TYPICAL) 2 3 | CONTROL PANEL | CONTROL PANEL "SC-MRT1-LCP-01"

(TYPICAL) 4 5

7.5 | 10KW | 13KVA | 3 | 5 | 5 | 5 | 10KW

NON-POTABLE WATER PUMP "NPW-NP-002"

MAG TANK AND DECANT PUMP

UNIT HEATER "OP-UH-001"

TO AUTOMATIC TRANSFER SWITCH "OP-ATS-001" REFER TO DRAWING NO. [80DE07]

EFFLUENT FILTER "FLF-002" CONTROL PANEL "FLCP-F2"

OPERATIONS BUILDING MOTORIZED HOIST "OP-H-001"

LIFT STATION HOIST "LS-H-001"

WASTE ACTIVATED SLUDGE PUMP "SC-WASPUMP-01"

WASTE ACTIVATED SLUDGE PUMP "SC-WASPUMP-02"

MACERATOR "SC-MACERATOR-01"

◇# KEY NOTES

1. EXISTING 480V MOTOR CONTROL CENTER MANUFACTURED BY "GE", MODEL NO. "E9000", ML NO. "0C61X0154L02".
2. CONDUIT CONTAINS POWER AND/OR CONTROL CABLES. DISCONNECT AND REMOVE EXISTING POWER CABLE/WIRE IN ITS ENTIRETY. DISCONNECT CONTROL CABLE/WIRE AND PULL INTO MCC. LEAVING 50 FT OF WIRE TO BE USED AS SPARE.
3. DISCONNECT AND REMOVE EXPOSED CONDUIT/RACEWAY. REFER TO FLOOR PLANS FOR ADDITIONAL INFORMATION.
4. DISCONNECT AND REMOVE EQUIPMENT IN ITS ENTIRETY. COORDINATE WITH MECHANICAL.
5. EQUIPMENT TAGS TO BE REMOVED AND REPLACED DURING RENOVATION ACTIVITIES.

THIS CONFORMED DOCUMENT IS RELEASED FOR THE CONVENIENCE OF THE CONTRACTOR UNDER THE AUTHORITY OF:

K. A. Harutunian — 11-01-22

K. A. HARUTUNIAN, P.E. — DATE
TX LIC NO. 59181

SEE DISCLAIMER FOR LIMITATIONS OF USE.

CONTRACT DOCUMENTS DATED FEBRUARY 28, 2022, AS PART OF THE BIDDING DOCUMENTS (DRAWINGS AND SPECIFICATIONS) AND SUBSEQUENTLY ISSUED ADDENDA HAVE BEEN MERGED INTO ONE CONFORMING SET OF DOCUMENTS FOR THE CONVENIENCE OF THE CONTRACTOR. IF INCONSISTENCIES OR AMBIGUITIES BETWEEN "CONFORMED" DOCUMENTS AND CONTRACT DOCUMENTS ARE FOUND, THE CONTRACT DOCUMENTS SHALL GOVERN.

This document, and the designs incorporated herein, is an instrument of professional service that has been developed, designed and prepared by Harutunian Engineering, Inc., and is not to be used, in whole or in part, for any other project without giving written notice to Harutunian Engineering, Inc.

REV	DATE	BY	DESCRIPTION
			CONFORMED DOCUMENTS

DESIGNED HEI | DRAWN HEI | CHECKED HEI | DATE NOVEMBER 2022

** ORIGINAL SEALED BY K.A. HARUTUNIAN 02-28-22 TX PE 59181 **

HARUTUNIAN ENGINEERING INCORPORATED
ENGINEERING AND ENVIRONMENTAL CONSULTANTS
8100 CROSS PARK DRIVE AUSTIN, TEXAS 78754
TBPE REGISTRATION NO. F-2408

carollo
TBPELS No. F-882

CITY OF AUSTIN

CITY OF AUSTIN
WILD HORSE RANCH WWTP EXPANSION
DEMOLITION
OPERATIONS BUILDING 480V DETAILED ONE-LINE DIAGRAM - DEMOLITION - 5

VERIFY SCALES
BAR IS ONE INCH ON ORIGINAL DRAWING
0 1"
IF NOT ONE INCH ON THIS SHEET, ADJUST SCALES ACCORDINGLY

JOB NO. 10976A.00
DRAWING NO. 80DE05
SHEET NO. 174 OF 464

480V MOTOR CONTROL CENTER "OP-MCC-01R" (1)

480V, 3Ø, 3W, 1600A TIN PLATED COPPER BUS, RATED 65,000 A.I.C.

MATCHLINE "B-B" REFER TO DRAWING NO. [80DE05]

5B 8A 11D 12D 10E 5A 6 7A

CB 3P-70A "BKR-UV1"

480V / 120V "CPT-MCC1R"

CB 3P-250A "BKR-GEN1R"

K1-OP K2-OP

CB 3P-15A "BKR-ACU1"

CB 3P-15A "BKR-ACU3"

MCP 3P-300A "BKR-PAB3"

"PT-PAB3" 480V 120V

POWER MONITORING UNIT "PQM-PAB3"
V A kW kVAR kWH
VOLTAGE (ØA,ØB,ØC) CURRENT (ØA,ØB,ØC) ACTIVE POWER REACTIVE POWER KILOWATT-HOURS

"CT-1PAB3" 300/5 STB "STB-1PAB3"

"CT-2PAB3" 300/5 STB "STB-2PAB3"

R PAB3 S1 PAB3 7C S2 PAB3

CAP-PAB3 40 kVAR

CI PAB3 XXX

CONTROL POWER

RS-485 MODBUS COMMUNICATION

49

LUGS

GROUND BUS

"OP-DS-MCC1R" 3P-400A

"OP-DS-ACU1" 3P-30A

"OP-DS-ACU3" 3P-30A

OP-PAB-003-P OP-PAB-003-SH OP-PAB-003-C1 OP-PAB-003-E1 OP-PAB-003-C2

4 5 (TYPICAL)

LV 150 39

OP-VS-1320-C

2 3 (TYPICAL)

UV-XFMR-UV1-P

TRANSFORMER "UV-XFMR-UV1"

UV-CP-UV1-P

6KW ULTRA-VIOLET LIGHTING "UV-CP-UV1" CONTROL PANEL

"UV ATS" N E L

"UV-PANEL-PDP" 480/277V 3Ø 4W 200A BUS 200A MCB 30-POLE

6 7 8 9

80kW

OPS BUILDING LIGHTS

UV GENERATOR

6KW PORTABLE GENERATOR

6KW ELECTRICAL ROOM AIR CONDITIONING UNIT "OP-ACU-001"

6KW OFFICE AIR CONDITIONING UNIT "OP-ACU-003"

PROCESS AIR BLOWER "OP-PAB-003"

PROCESS AIR BLOWER CONTROL PANEL "OP-OP-PAB"

TO MAIN CONTROL PANEL "OP-MCP-001"

TO MAIN CONTROL PANEL "OP-MCP-001"

TO GROUNDING ELECTRODE SYSTEM

KEY NOTES

1. EXISTING 480V MOTOR CONTROL CENTER MANUFACTURED BY "GE", MODEL NO. "E9000", ML NO. "0C61X0154L02".
2. CONDUIT CONTAINS POWER AND/OR CONTROL CABLES. DISCONNECT AND REMOVE EXISTING POWER CABLE/WIRE IN ITS ENTIRETY. DISCONNECT CONTROL CABLE/WIRE AND PULL INTO MCC. LEAVING 50 FT OF WIRE TO BE USED AS SPARE.
3. DISCONNECT AND REMOVE EXPOSED CONDUIT/RACEWAY. REFER TO FLOOR PLANS FOR ADDITIONAL INFORMATION.
4. DISCONNECT AND REMOVE EQUIPMENT IN ITS ENTIRETY. COORDINATE WITH MECHANICAL.
5. EQUIPMENT TAGS TO BE REMOVED AND REPLACED DURING RENOVATION ACTIVITIES.
6. EXISTING UV AUTOMATIC TRANSFER SWITCH AND UV POWER DISTRIBUTION PANEL LOCATED WITHIN THE OPERATIONS BUILDING. DISCONNECT AND REMOVE IN THEIR ENTIRETY.
7. DISCONNECT AND REMOVE EXISTING CONDUIT AND WIRE FROM GENERATOR TO THE ATS. A PORTION OF THE CONDUIT SHALL REMAIN AND BE REUSED DURING RENOVATION ACTIVITIES. REFER TO THE OPERATIONS BUILDING RENOVATION DRAWINGS FOR ADDITIONAL INFORMATION.
8. EXISTING 480V 1-PHASE, 2P-20A CIRCUIT NOS. 7,9 ROUTING FROM THE EXISTING UV PANEL TO EXISTING LIGHTING FIXTURES ON THE INTERIOR AND/OR EXTERIOR OF THE OPERATIONS BUILDING. DISCONNECT CONDUIT AND WIRE POWERING THE EXISTING LIGHTING FIXTURES. EXISTING LIGHTING FIXTURES WILL BE RE-FED FROM THE EXISTING POWER DISTRIBUTION PANEL. CONTRACTOR SHALL FIELD VERIFY EXISTING CONDITIONS AND ROUTING OF FEEDER CONDUIT TO THE LIGHTING FIXTURES PRIOR TO COMMENCING DEMOLITION OR RENOVATION ACTIVITIES. IT IS POSSIBLE THAT SOME OF THE EXISTING FEEDER CONDUIT MAY REMAIN AND BE REUSED DURING RENOVATION ACTIVITIES; HOWEVER, THIS SHALL BE DETERMINED BY THE CONTRACTOR.
9. EXISTING OPERATIONS BUILDING LIGHTING FIXTURES APPEAR TO BE RATED 480V, 1-PHASE POWER BASED ON THE FEEDER BREAKER. THESE LIGHTING FIXTURES WERE REPLACED BY OTHERS AND NO RECORD DRAWINGS ARE AVAILABLE. CONTRACTOR SHALL FIELD VERIFY WHICH LIGHTING FIXTURES ARE FED FROM THIS UV PANEL. LIGHTING FIXTURES SHALL REMAIN AND BE POWERED FROM ANOTHER SOURCE DURING RENOVATION ACTIVITIES.

THIS CONFORMED DOCUMENT IS RELEASED FOR THE CONVENIENCE OF THE CONTRACTOR UNDER THE AUTHORITY OF:

K. A. Harutunian — 11-01-22

K. A. HARUTUNIAN, P.E. DATE
TX LIC NO. 59181

SEE DISCLAIMER FOR LIMITATIONS OF USE.

CONTRACT DOCUMENTS DATED FEBRUARY 28, 2022, AS PART OF THE BIDDING DOCUMENTS (DRAWINGS AND SPECIFICATIONS) AND SUBSEQUENTLY ISSUED ADDENDA HAVE BEEN MERGED INTO ONE CONFORMING SET OF DOCUMENTS FOR THE CONVENIENCE OF THE CONTRACTOR. IF INCONSISTENCIES OR AMBIGUITIES BETWEEN "CONFORMED" DOCUMENTS AND CONTRACT DOCUMENTS ARE FOUND, THE CONTRACT DOCUMENTS SHALL GOVERN.

This document, and the designs incorporated herein, is an instrument of professional service that has been developed, designed and prepared by Harutunian Engineering, Inc., and is not to be used, in whole or in part, for any other project without giving written notice to Harutunian Engineering, Inc.

REV	DATE	BY	DESCRIPTION
			CONFORMED DOCUMENTS

DESIGNED HEI
DRAWN HEI
CHECKED HEI
DATE NOVEMBER 2022

** ORIGINAL SEALED BY K.A. HARUTUNIAN 02-28-22 TX PE 59181 **

HARUTUNIAN ENGINEERING INCORPORATED
ENGINEERING AND ENVIRONMENTAL CONSULTANTS
8100 CROSS PARK DRIVE AUSTIN, TEXAS 78754
TBPE REGISTRATION NO. F-2408
TBPELS No. F-882

CITY OF AUSTIN

CITY OF AUSTIN
WILD HORSE RANCH WWTP EXPANSION
DEMOLITION
OPERATIONS BUILDING 480V DETAILED ONE-LINE DIAGRAM - DEMOLITION - 6

VERIFY SCALES
BAR IS ONE INCH ON ORIGINAL DRAWING
0 1"
IF NOT ONE INCH ON THIS SHEET, ADJUST SCALES ACCORDINGLY

JOB NO. 10976A.00
DRAWING NO. 80DE06
SHEET NO. 175 OF 464

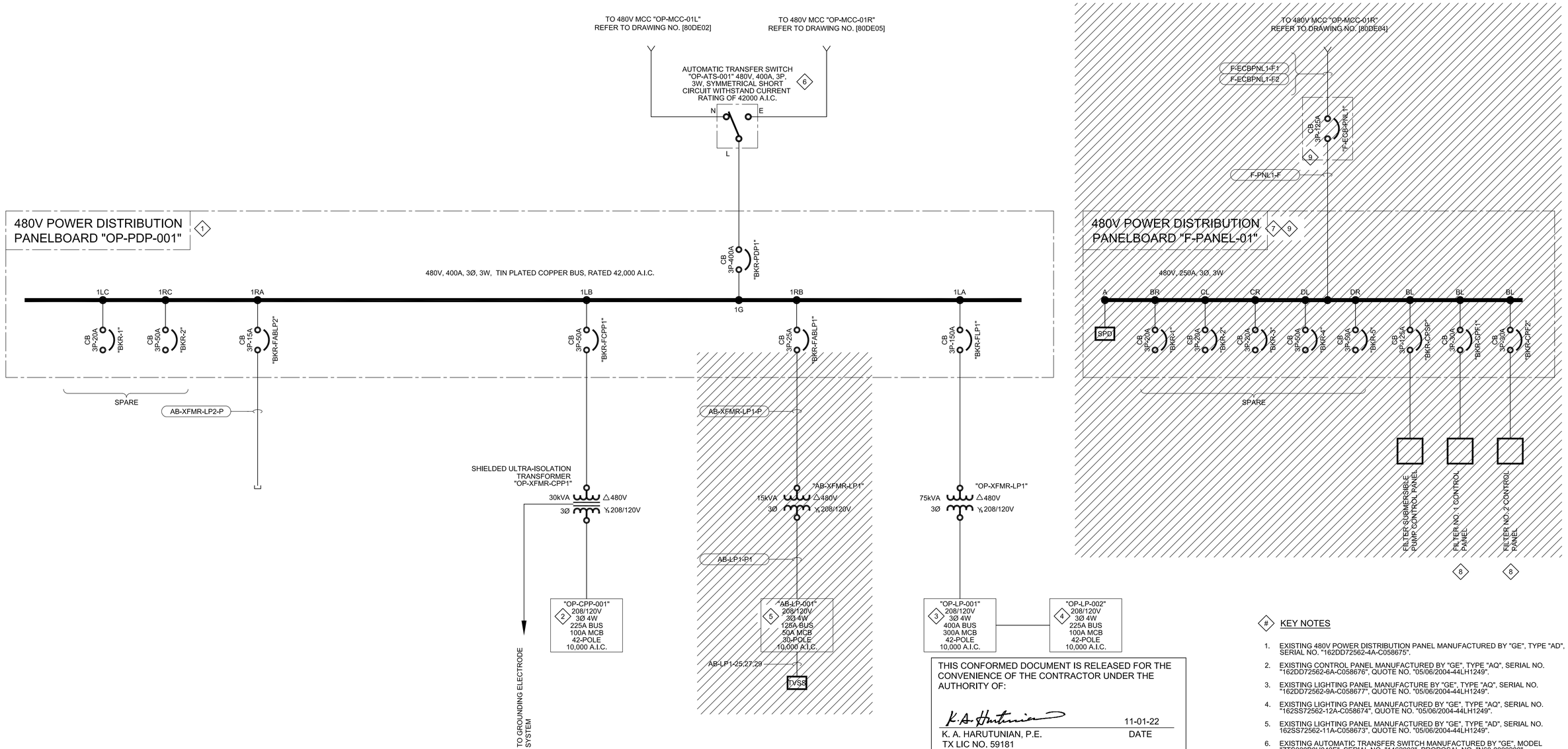

KEY NOTES

1. EXISTING 480V POWER DISTRIBUTION PANEL MANUFACTURED BY "GE", TYPE "AD", SERIAL NO. "162DD72562-4A-C058675".
2. EXISTING CONTROL PANEL MANUFACTURED BY "GE", TYPE "AQ", SERIAL NO. "162DD72562-6A-C058676", QUOTE NO. "05/06/2004-44LH1249".
3. EXISTING LIGHTING PANEL MANUFACTURE BY "GE", TYPE "AQ", SERIAL NO. "162DD72562-9A-C058677", QUOTE NO. "05/06/2004-44LH1249".
4. EXISTING LIGHTING PANEL MANUFACTURED BY "GE", TYPE "AQ", SERIAL NO. "162SS72562-12A-C058674", QUOTE NO. "05/06/2004-44LH1249".
5. EXISTING LIGHTING PANEL MANUFACTURED BY "GE", TYPE "AD", SERIAL NO. 162SS72562-11A-C058673", QUOTE NO. "05/06/2004-44LH1249".
6. EXISTING AUTOMATIC TRANSFER SWITCH MANUFACTURED BY "GE", MODEL "ZTS000B0U040E", SERIAL NO. "1462003", PROPOSAL NO. "N60-0000200".
7. EXISTING 480V POWER DISTRIBUTION PANEL MANUFACTURED BY "EATON", SERIAL NO. "A 81395183", AND JOB NO. "SUX0999723-100"
8. DISCONNECT FILTER CONTROL PANEL. PACKAGED FILTER ASSEMBLY TO REMAIN AND BE RE-CONNECTED. REFER TO RENOVATION DRAWINGS FOR ADDITIONAL INFORMATION.
9. DISCONNECT AND REMOVE IN ITS ENTIRETY.

THIS CONFORMED DOCUMENT IS RELEASED FOR THE CONVENIENCE OF THE CONTRACTOR UNDER THE AUTHORITY OF:

K. A. HARUTUNIAN, P.E.
TX LIC NO. 59181

11-01-22
DATE

SEE DISCLAIMER FOR LIMITATIONS OF USE.

CONTRACT DOCUMENTS DATED FEBRUARY 28, 2022, AS PART OF THE BIDDING DOCUMENTS (DRAWINGS AND SPECIFICATIONS) AND SUBSEQUENTLY ISSUED ADDENDA HAVE BEEN MERGED INTO ONE CONFORMING SET OF DOCUMENTS FOR THE CONVENIENCE OF THE CONTRACTOR. IF INCONSISTENCIES OR AMBIGUITIES BETWEEN "CONFORMED" DOCUMENTS AND CONTRACT DOCUMENTS ARE FOUND, THE CONTRACT DOCUMENTS SHALL GOVERN.

This document, and the designs incorporated herein, is an instrument of professional service that has been developed, designed and prepared by Harutunian Engineering, Inc., and is not to be used, in whole or in part, for any other project without giving written notice to Harutunian Engineering, Inc.

REV	DATE	BY	DESCRIPTION
			CONFORMED DOCUMENTS

DESIGNED HEI
DRAWN HEI
CHECKED HEI
DATE NOVEMBER 2022

** ORIGINAL SEALED BY K.A. HARUTUNIAN 02-28-22 TX PE 59181 **

HARUTUNIAN ENGINEERING INCORPORATED
ENGINEERING AND ENVIRONMENTAL CONSULTANTS
8100 CROSS PARK DRIVE
AUSTIN, TEXAS 78754
TBPE REGISTRATION NO. F-2408
TBPELS No. F-882

CITY OF AUSTIN
WILD HORSE RANCH WWTP EXPANSION
DEMOLITION
OPERATIONS BUILDING 480V DETAILED ONE-LINE DIAGRAM - DEMOLITION - 7

VERIFY SCALES
BAR IS ONE INCH ON ORIGINAL DRAWING
0 1"
IF NOT ONE INCH ON THIS SHEET, ADJUST SCALES ACCORDINGLY

JOB NO. 10976A.00
DRAWING NO. 80DE07
SHEET NO. 176 OF 464

KEY NOTES

1. REFER TO ONE-LINE DIAGRAMS AND CONTROL WIRING SCHEMATIC DEMOLITION DRAWINGS FOR DEMOLITION ACTIVITIES WITHIN THE STARTER SECTION.

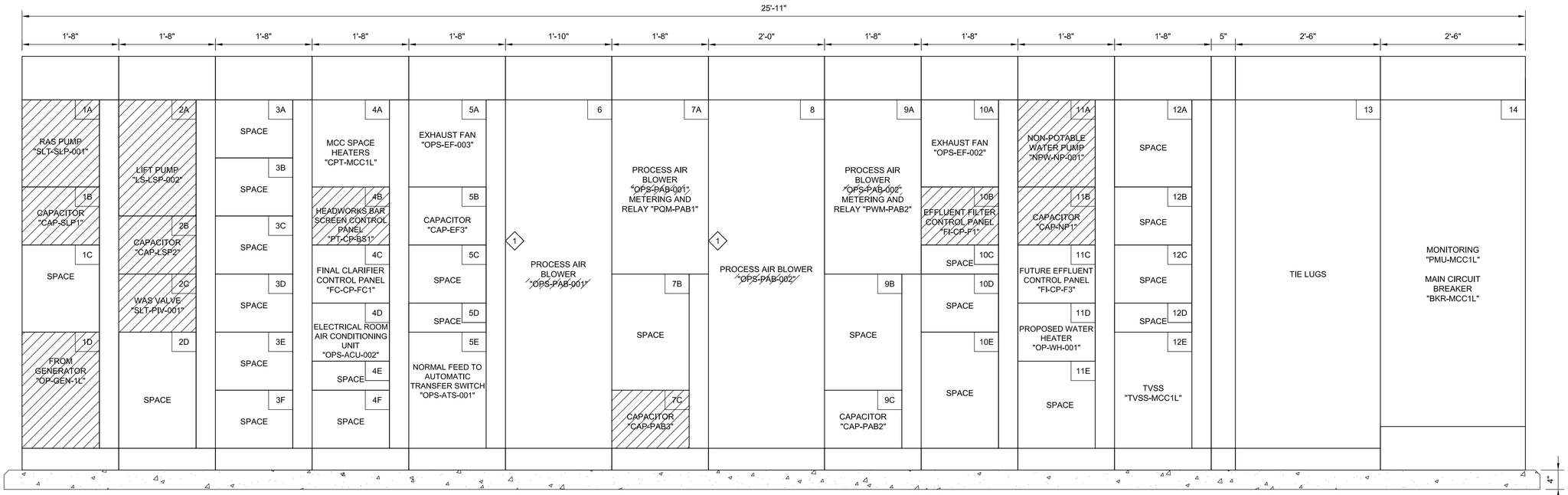

MOTOR CONTROL CENTER "OP-MCC-01L" FRONT ELEVATION

SCALE: N.T.S.

THIS CONFORMED DOCUMENT IS RELEASED FOR THE CONVENIENCE OF THE CONTRACTOR UNDER THE AUTHORITY OF:

K. A. HARUTUNIAN, P.E.
TX LIC NO. 59181

11-01-22
DATE

SEE DISCLAIMER FOR LIMITATIONS OF USE.

CONTRACT DOCUMENTS DATED FEBRUARY 28, 2022, AS PART OF THE BIDDING DOCUMENTS (DRAWINGS AND SPECIFICATIONS) AND SUBSEQUENTLY ISSUED ADDENDA HAVE BEEN MERGED INTO ONE CONFORMING SET OF DOCUMENTS FOR THE CONVENIENCE OF THE CONTRACTOR. IF INCONSISTENCIES OR AMBIGUITIES BETWEEN "CONFORMED" DOCUMENTS AND CONTRACT DOCUMENTS ARE FOUND, THE CONTRACT DOCUMENTS SHALL GOVERN.

This document, and the designs incorporated herein, is an instrument of professional service that has been developed, designed and prepared by Harutunian Engineering, Inc., and is not to be used, in whole or in part, for any other project without giving written notice to Harutunian Engineering, Inc.

REV	DATE	BY	DESCRIPTION
			CONFORMED DOCUMENTS

DESIGNED HEI
DRAWN HEI
CHECKED HEI
DATE NOVEMBER 2022

**
ORIGINAL SEALED BY
K.A. HARUTUNIAN
02-28-22
TX PE 59181
**

HARUTUNIAN ENGINEERING INCORPORATED
ENGINEERING AND ENVIRONMENTAL CONSULTANTS
8100 CROSS PARK DRIVE
AUSTIN, TEXAS 78754
TBPE REGISTRATION NO. F-2408

carollo
TBPELS No. F-882

CITY OF AUSTIN
FOUNDED 1839

CITY OF AUSTIN

CITY OF AUSTIN
WILD HORSE RANCH WWTP EXPANSION
DEMOLITION
OPERATIONS BUILDING EQUIPMENT LOCATION PLAN DEMOLITION - 1

VERIFY SCALES
BAR IS ONE INCH ON ORIGINAL DRAWING
0 1"
IF NOT ONE INCH ON THIS SHEET, ADJUST SCALES ACCORDINGLY

JOB NO. 10976A.00
DRAWING NO. 80DE08
SHEET NO. 177 OF 464

KEY NOTES

1. REFER TO ONE-LINE DIAGRAMS AND CONTROL WIRING SCHEMATIC DEMOLITION DRAWINGS FOR DEMOLITION ACTIVITIES WITHIN THE STARTER SECTION.

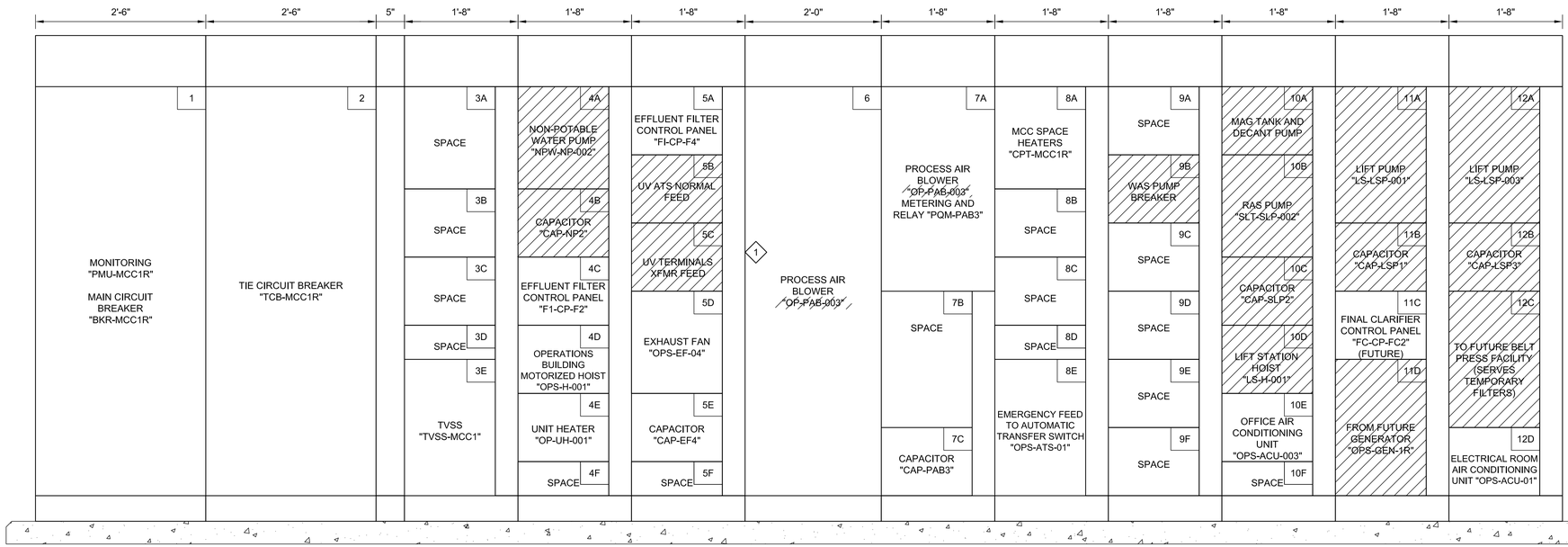

MOTOR CONTROL CENTER "OP-MCC-01R" FRONT ELEVATION

SCALE: N.T.S.

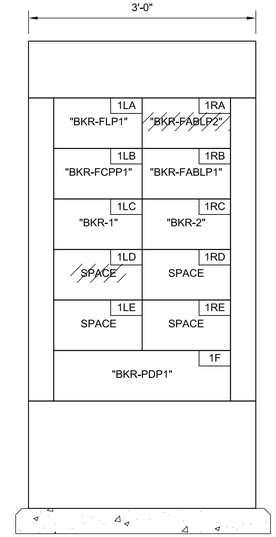

480V POWER DISTRIBUTION PANELBOARD "OP-PDP-001" FRONT ELEVATION

SCALE: N.T.S.

THIS CONFORMED DOCUMENT IS RELEASED FOR THE CONVENIENCE OF THE CONTRACTOR UNDER THE AUTHORITY OF:

K. A. HARUTUNIAN, P.E.
TX LIC NO. 59181

11-01-22
DATE

SEE DISCLAIMER FOR LIMITATIONS OF USE.

CONTRACT DOCUMENTS DATED FEBRUARY 28, 2022, AS PART OF THE BIDDING DOCUMENTS (DRAWINGS AND SPECIFICATIONS) AND SUBSEQUENTLY ISSUED ADDENDA HAVE BEEN MERGED INTO ONE CONFORMING SET OF DOCUMENTS FOR THE CONVENIENCE OF THE CONTRACTOR. IF INCONSISTENCIES OR AMBIGUITIES BETWEEN "CONFORMED" DOCUMENTS AND CONTRACT DOCUMENTS ARE FOUND, THE CONTRACT DOCUMENTS SHALL GOVERN.

This document, and the designs incorporated herein, is an instrument of professional service that has been developed, designed and prepared by Harutunian Engineering, Inc., and is not to be used, in whole or in part, for any other project without giving written notice to Harutunian Engineering, Inc.

REV	DATE	BY	DESCRIPTION
			CONFORMED DOCUMENTS

DESIGNED HEI
DRAWN HEI
CHECKED HEI
DATE NOVEMBER 2022

**
ORIGINAL
SEALED BY
K.A. HARUTUNIAN
02-28-22
TX PE 59181
**

HARUTUNIAN ENGINEERING INCORPORATED
ENGINEERING AND ENVIRONMENTAL CONSULTANTS
8100 CROSS PARK DRIVE
AUSTIN, TEXAS 78754
TBPE REGISTRATION NO. F-2408

carollo
TBPELS No. F-882

CITY OF AUSTIN FOUNDED 1839
CITY OF AUSTIN

CITY OF AUSTIN
WILD HORSE RANCH WWTP EXPANSION
DEMOLITION
OPERATIONS BUILDING EQUIPMENT LOCATION PLAN DEMOLITION - 2

VERIFY SCALES
BAR IS ONE INCH ON ORIGINAL DRAWING
0 1"
IF NOT ONE INCH ON THIS SHEET, ADJUST SCALES ACCORDINGLY

JOB NO. 10976A.00
DRAWING NO. 80DE09
SHEET NO. 178 OF 464

CIRCUIT BREAKER PANEL SCHEDULE–"OP–LP–1"

VOLTS: 120/208 AMPS: 400A BUS MAIN: 300A PHASE/WIRE: 3ø, 4W

CONDUIT/WIRE DESCRIPTION	CIRCUIT BREAKER SIZE	CKT. NO.	LOAD DESCRIPTIONS	PHASE A (VA)	PHASE B (VA)	PHASE C (VA)	LOAD DESCRIPTIONS	CKT. NO.	CIRCUIT BREAKER SIZE	CONDUIT/WIRE DESCRIPTION
1–1/2"–3#2(P), 1#2(N),1#6(G)	100 3P	1	LIGHTING PANEL "OP–LP–2" SUB FEED	3603			DRY CHEMICAL FEEDER "OP–DCF–001"	2	20 3P	1"–3#10(P),1#10(G)
				4990						
		3			3603			4		
					6806					
		5				3603		6		
						5150				
	20 2P	7	SPARE	1570			BLOWER ROOM LIGHTING, SWITCH "a"	8	20 1P	3/4"–3#8(P),1#8(G)

		9			1570		BLOWER ROOM LIGHTING, SWITCH "b"	10	20 1P	

1–1/4"–5#10(P),1#10(G)	20 2P	11	GENERATOR "OP–GEN–01" BATTERY CHARGER			1200	ELECTRICAL ROOM LIGHTING, SWITCH "a"	12	20 1P	3/4"–2#8(P),1#8(G)

		13		---			SPARE	14	20 1P	
				---						
	20 1P	15	GENERATOR "OP–GEN–01" BLOCK HEATER		120		EYE WASH MIXING VALVE BOX "OP–MVB–001"	16	20 1P	3/4"–2#10(P),1#10(G)
					---					
	20 1P	17	SPARE			120	EYE WASH MIXING VALVE BOX "OP–MVB–002"	18	20 1P	3/4"–2#10(P),1#10(G)
						---				
	20 1P	19	SPARE	---			SPARE	20	20 1P	

1"–2#10(P),1#10(G)	20 1P	21	VENTILATION LOUVER "OP–LO–001"		---		SPARE	22	20 1P	
					110					
	20 1P	23	SPARE			---	SPARE	24	20 1P	
						---				
	20 1P	25	SPARE	---			SPARE	26	20 1P	
				---						
	20 1P	27	SPARE		---		SPARE	28	20 1P	
					---					
	20 1P	29	SPARE			---	SPARE	30	20 1P	
						---				
	20 1P	31	SPARE	---			SPARE	32	20 1P	
				---						
	20 1P	33	SPARE		---		SPARE	34	20 1P	
					---					
	20 1P	35	SPARE			631	RENOVATED RECIRCULATION PUMP	36	20 1P	3(4")–3#10(P),1#10(G)
						---				
	20 1P	37	SPARE	631				38	20 1P	
				---						
	20 1P	39	SPARE		---		SPARE	40	20 1P	
					---					
	20 1P	41	SPARE			---	SPARE	42	20 1P	

	TOTAL CONNECTED VOLT AMPS (VA)									

GENERAL NOTES:

1. THE EXISTING INFORMATION WAS OBTAINED FROM RECORD DRAWINGS AND CURSORY SITE OBSERVATIONS. CONTRACTOR SHALL FIELD VERIFY EXISTING CONNECTED LOADS PRIOR TO COMMENCING DEMOLITION OR RENOVATION ACTIVITIES. EXISTING PANELBOARD WAS MANUFACTURED BY GENERAL ELECTRIC (GE), TYPE A SERIES II, CATALOG NO. AQF3424CBXAXS5B6, SHOP ORDER NO. 162DD72562, YEAR 2004.
2. BASED ON CURSORY SITE OBSERVATIONS, THE TYPED PANEL SCHEDULE PROVIDED WITHIN THE EXISTING PANEL DIFFERS FROM THE CURRENT RECORD DRAWINGS; THEREFORE, THIS DEMOLITION PANEL SCHEDULE HAS BEEN PROVIDED AS A SUPPLEMENTS TO THE PANEL SCHEDULE RECORD DRAWING WHICH WAS PROVIDED AS A REFERENCE DRAWING.

THIS CONFORMED DOCUMENT IS RELEASED FOR THE CONVENIENCE OF THE CONTRACTOR UNDER THE AUTHORITY OF:

K. A. Harutunian — 11-01-22

K. A. HARUTUNIAN, P.E. — DATE
TX LIC NO. 59181

SEE DISCLAIMER FOR LIMITATIONS OF USE.

CONTRACT DOCUMENTS DATED FEBRUARY 28, 2022, AS PART OF THE BIDDING DOCUMENTS (DRAWINGS AND SPECIFICATIONS) AND SUBSEQUENTLY ISSUED ADDENDA HAVE BEEN MERGED INTO ONE CONFORMING SET OF DOCUMENTS FOR THE CONVENIENCE OF THE CONTRACTOR. IF INCONSISTENCIES OR AMBIGUITIES BETWEEN "CONFORMED" DOCUMENTS AND CONTRACT DOCUMENTS ARE FOUND, THE CONTRACT DOCUMENTS SHALL GOVERN.

This document, and the designs incorporated herein, is an instrument of professional service that has been developed, designed and prepared by Harutunian Engineering, Inc., and is not to be used, in whole or in part, for any other project without giving written notice to Harutunian Engineering, Inc.

REV	DATE	BY	DESCRIPTION
			CONFORMED DOCUMENTS

DESIGNED HEI
DRAWN HEI
CHECKED HEI
DATE NOVEMBER 2022

** ORIGINAL SEALED BY K.A. HARUTUNIAN 02-28-22 TX PE 59181 **

HARUTUNIAN ENGINEERING INCORPORATED
ENGINEERING AND ENVIRONMENTAL CONSULTANTS
8100 CROSS PARK DRIVE
AUSTIN, TEXAS 78754
TBPE REGISTRATION NO. F-2408

carollo®
TBPELS No. F-882

CITY OF AUSTIN FOUNDED 1839
CITY OF AUSTIN

CITY OF AUSTIN
WILD HORSE RANCH WWTP EXPANSION
DEMOLITION
OPERATIONS BUILDING
PANEL SCHEDULES - DEMOLITION - 1

VERIFY SCALES
BAR IS ONE INCH ON ORIGINAL DRAWING
0 1"
IF NOT ONE INCH ON THIS SHEET, ADJUST SCALES ACCORDINGLY

JOB NO. 10976A.00
DRAWING NO. 80DE10
SHEET NO. 179 OF 464

CIRCUIT BREAKER PANEL SCHEDULE–"OP–LP–2"

VOLTS: 120/208 AMPS: 225A BUS MAIN: 100A PHASE/WIRE: 3ø, 4W

CONDUIT/WIRE DESCRIPTION	CIRCUIT BREAKER SIZE	CKT. NO.	LOAD DESCRIPTIONS	PHASE A (VA)	PHASE B (VA)	PHASE C (VA)	LOAD DESCRIPTIONS	CKT. NO.	CIRCUIT BREAKER SIZE	CONDUIT/WIRE DESCRIPTION
3/4"–2#10(P),1#10(G)	20 1P	1	RESTROOM LIGHTING	180 / 259			BLOWER ROOM RECEPTACLE	2	20 1P	3/4"–2#8(P),1#8(G)
3/4"–2#10(P),1#10(G)	20 1P	3	REST ROOM RECEPTACLES		100 / 360		REST ROOM EXHAUST FAN "OP–EF–001"	4	20 1P	3/4"–2#10(P),1#10(G)
3/4"–2#10(P),1#10(G)	20 1P	5	OFFICE EAST AND NORTH WALL RECEPACLES			180 / 360	STORAGE AREA SOUTH WALL RECEPTACLE	6	20 1P	3/4"–2#8(P),1#8(G)
3/4"–2#10(P),1#10(G)	20 1P	7	LABORATORY REFRIGERATOR RECEPTACLE	360 / 1440			OPERATION BUILDING EXTERIOR EAST WALL RECEPTACLE	8	20 1P	3/4"–2#10(P),1#10(G)
3/4"–2#8(P),1#8(G)	20 1P	9	ELECTRICAL ROOM RECEPTACLES		1251 / 360		OPERATIONS BUILDING INTERIOR EGRESS LIGHTING	10	20 1P	3/4"–2#8(P),1#8(G)
3/4"–2#8(P),1#8(G)	20 1P	11	OFFICE LIGHTING			--- / 534	SPARE	12	20 1P	
3/4"–2#10(P),1#10(G)	20 1P	13	OPERATIONS BUILDING EMERGENCY LIGHTING	50 / 240			RAINWATER ULTRA–VIOLET DISINFECTION SYSTEM	14	20 1P	3/4"–2#10(P),1#10(G)
1"–3#10(P),1#10(G)	20 1P	15	ALUM FEED PUMP "OP–CHFP–001"		1200 / 120		FINAL CLARIFIER CHEMICAL SHED HEATING	16	20 1P	1"–3#6(P),1#6(G)
	20 1P	17	ALUM FEED PUMP "OP–CHFP–002"			360 / 120	FINAL CLARIFIER CHEMICAL SHED RECEPTACLES NORTH	18	20 1P	
	20 1P	19	ALUM FEED PUMP "OP–CHFP–003"	360 / 120			FINAL CLARIFIER CHEMICAL SHED RECEPTACLES SOUTH	20	20 1P	
	20 1P	21	SPARE		--- / ---		FUTURE SCUM BOX LIGHTING	22	20 2P	1–1/4"–EMPTY
1–1/4"–2#4(P) 1#4(G),2#6(P)	20 1P	23	FINAL CLARIFIER "FC–FC–001" CONVENIENCE RECEPTACLE			--- / 180		24		
	20 2P	25	FINAL CLARIFIER "FC–FC–001" WALKWAY LIGHTING	--- / 216			FUTURE SCUM BOX RECEPTACLE	26	20 1P	
		27			--- / 84		FINAL CLARIFIER "FC–FC–002" CONVENIENCE RECEPTACLE	28	20 1P	1–1/4"–EMPTY
1–1/4"–2#4(P) 1#4(G),2#6(P)	20 2P	29	FILTER "FI–F–001" WALKWAY LIGHTING			--- / 833	FINAL CLARIFIER "FC–FC–002" WALKWAY LIGHTING	30	20 2P	
		31		--- / 833				32		
	20 1P	33	"FI–F–001" AND "FI–F–002" CONVENIENCE RECEPTACLE		1570 / 180		OPERATIONS BUILDING STORAGE AREA NORTH LIGHTING	34	20 1P	1"–3#6(P),1#6(G)
1–1/4"–3#6(P),1#6(G)	20 2P	35	FILTER "FI–F–002" WALKWAY LIGHTING			1570 / 833	OPERATIONS BUILDING STORAGE AREA SOUTH LIGHTING	36	20 1P	
		37		705 / 833			RAS PUMP STATION LIGHTING	38	20 2P	1–1/4"–2#4(P) 1#4(G),2#6(P)
3/4"–2#10(P),1#10(G)	20 1P	39	OFFICE PERSONNEL REFRIGERATOR		705 / 1440			40		
1"–2#10(P),1#10(G)	20 1P	41	CHEMICAL FEED CONTROL			720 / ---	RAS PUMP STATION CONVENIENCE RECEPTACLE	42	20 1P	
TOTAL CONNECTED VOLT AMPS (VA)				4990	6806	5150				

GENERAL NOTES:

1. THE EXISTING INFORMATION WAS OBTAINED FROM RECORD DRAWINGS AND CURSORY SITE OBSERVATIONS. CONTRACTOR SHALL FIELD VERIFY EXISTING CONNECTED LOADS PRIOR TO COMMENCING DEMOLITION OR RENOVATION ACTIVITIES. EXISTING PANELBOARD WAS MANUFACTURED BY GENERAL ELECTRIC (GE), TYPE A SERIES II, CATALOG NO. ADF3421TBXAXS5B6, SHOP ORDER NO. 162DD72562, YEAR 2004.
2. BASED ON CURSORY SITE OBSERVATIONS, THE TYPED PANEL SCHEDULE PROVIDED WITHIN THE EXISTING PANEL DIFFERS FROM THE CURRENT RECORD DRAWINGS; THEREFORE, THIS DEMOLITION PANEL SCHEDULE HAS BEEN PROVIDED AS A SUPPLEMENTS TO THE PANEL SCHEDULE RECORD DRAWING WHICH WAS PROVIDED AS A REFERENCE DRAWING.

THIS CONFORMED DOCUMENT IS RELEASED FOR THE CONVENIENCE OF THE CONTRACTOR UNDER THE AUTHORITY OF:

K. A. HARUTUNIAN, P.E. — 11-01-22
TX LIC NO. 59181 — DATE

SEE DISCLAIMER FOR LIMITATIONS OF USE.

CONTRACT DOCUMENTS DATED FEBRUARY 28, 2022, AS PART OF THE BIDDING DOCUMENTS (DRAWINGS AND SPECIFICATIONS) AND SUBSEQUENTLY ISSUED ADDENDA HAVE BEEN MERGED INTO ONE CONFORMING SET OF DOCUMENTS FOR THE CONVENIENCE OF THE CONTRACTOR. IF INCONSISTENCIES OR AMBIGUITIES BETWEEN "CONFORMED" DOCUMENTS AND CONTRACT DOCUMENTS ARE FOUND, THE CONTRACT DOCUMENTS SHALL GOVERN.

This document, and the designs incorporated herein, is an instrument of professional service that has been developed, designed and prepared by Harutunian Engineering, Inc., and is not to be used, in whole or in part, for any other project without giving written notice to Harutunian Engineering, Inc.

REV	DATE	BY	DESCRIPTION
			CONFORMED DOCUMENTS

DESIGNED HEI
DRAWN HEI
CHECKED HEI
DATE NOVEMBER 2022

** ORIGINAL SEALED BY K.A. HARUTUNIAN 02-28-22 TX PE 59181 **

HARUTUNIAN ENGINEERING INCORPORATED
ENGINEERING AND ENVIRONMENTAL CONSULTANTS
8100 CROSS PARK DRIVE AUSTIN, TEXAS 78754
TBPE REGISTRATION NO. F-2408

carollo
TBPELS No. F-882

CITY OF AUSTIN FOUNDED 1839
CITY OF AUSTIN

CITY OF AUSTIN
WILD HORSE RANCH WWTP EXPANSION
DEMOLITION
OPERATIONS BUILDING
PANEL SCHEDULES - DEMOLITION - 2

VERIFY SCALES
BAR IS ONE INCH ON ORIGINAL DRAWING
0 — 1"
IF NOT ONE INCH ON THIS SHEET, ADJUST SCALES ACCORDINGLY

JOB NO. 10976A.00
DRAWING NO. 80DE11
SHEET NO. 180 OF 464

CIRCUIT BREAKER PANEL SCHEDULE—"OP-CPP-001"

VOLTS: 120/208 AMPS: 225A BUS MAIN: 100A PHASE/WIRE: 3ø, 4W

CONDUIT/WIRE DESCRIPTION	CIRCUIT BREAKER SIZE	CKT. NO.	LOAD DESCRIPTIONS	PHASE A (VA)	PHASE B (VA)	PHASE C (VA)	LOAD DESCRIPTIONS	CKT. NO.	CIRCUIT BREAKER SIZE	CONDUIT/WIRE DESCRIPTION
1"–3#10(P),1#10(G),1#10(ID)	20 1P	1	INDICATOR TRANSMITTER CONTROLLERS	852 / 451			INDICATOR TRANSMITTER CONTROLLERS	2	20 1P	1"–4#10(P),1#10(G),1#10(IG)
1"–2#10(P),1#10(G),1#10(IG)	20 1P	3	LABORATORY COUNTER RECEPTACLES		252 / 50		24VDC INSTRUMENT LOOP POWER SUPPLY	4	20 1P	
1"–4#10(P),1#10(2),1#10(G)	20 1P	5	GENERAL PURPOSE CONTROL LOGIC			--- / 90	SPARE	6	20 1P	
	20 1P	7	PLC RACK R01 I/O "OP-PLC-R01"	--- / 252			SPARE	8	20 1P	
	20 1P	9	PLC RACK R02 I/O "OP-PLC-R02"		670 / 233		"OP-PRE-001 2.5A" CONTROL LOGIC POWER	10	20 1P	1"–3#10(P),1#10(G),1#10(G)
1"–2#10(P),1#10(2),1#10(G)	20 1P	11	WASTEWATER PUMP "OP-SWG-001" CONTROL LOGIC			900 / 50	UNINTERRUPTIBLE POWER SUPPLY "OP-UPS-01"	12	20 1P	
	20 1P	13	SPARE	571 / ---			"OP-MCP-001" LIGHTING SECTIONS 1 / 2	14	20 1P	1"–4#10(P),1#10(G),1#10(IG)
	20 1P	15	SPARE		1440 / ---		"OP-MCP-001" RECEPTACLES SECTIONS 1 / 2	16	20 1P	
	20 1P	17	SPARE			445 / ---	"OP-MCP-001" VENTILATION FANS SECTIONS 1 / 2	18	20 1P	
	20 1P	19	SPARE	--- / ---			SPARE	20	20 1P	
	20 1P	21	SPARE		--- / ---		SPARE	22	20 1P	
	20 1P	23	SPARE			--- / ---	SPARE	24	20 1P	
	20 1P	25	SPARE	--- / ---			SPARE	26	20 1P	
	20 1P	27	SPARE		--- / ---		SPARE	28	20 1P	
	20 1P	29	SPARE			--- / ---	SPARE	30	20 1P	
	20 1P	31	SPARE	--- / ---			SPARE	32	20 1P	
	20 1P	33	SPARE		--- / ---		SPARE	34	20 1P	
	20 1P	35	SPARE			--- / ---	SPARE	36	20 1P	
	20 1P	37	SPARE	--- / ---			SPARE	38	20 1P	
	20 1P	39	SPARE		--- / ---		SPARE	40	20 1P	
	20 1P	41	SPARE			--- / ---	SPARE	42	20 1P	
			TOTAL CONNECTED VOLT AMPS (VA)	3337	3211	2085				

GENERAL NOTES:

1. THE EXISTING INFORMATION WAS OBTAINED FROM RECORD DRAWINGS AND CURSORY SITE OBSERVATIONS. CONTRACTOR SHALL FIELD VERIFY EXISTING CONNECTED LOADS PRIOR TO COMMENCING DEMOLITION OR RENOVATION ACTIVITIES. EXISTING PANELBOARD WAS MANUFACTURED BY GENERAL ELECTRIC (GE), TYPE A SERIES II, CATALOG NO. AQF3422CBXAXB6, SHOP ORDER NO. 162DD72562, YEAR 2004.
2. BASED ON CURSORY SITE OBSERVATIONS, THE TYPED PANEL SCHEDULE PROVIDED WITHIN THE EXISTING PANEL DIFFERS FROM THE CURRENT RECORD DRAWINGS; THEREFORE, THIS DEMOLITION PANEL SCHEDULE HAS BEEN PROVIDED AS A SUPPLEMENTS TO THE PANEL SCHEDULE RECORD DRAWING WHICH WAS PROVIDED AS A REFERENCE DRAWING.

THIS CONFORMED DOCUMENT IS RELEASED FOR THE CONVENIENCE OF THE CONTRACTOR UNDER THE AUTHORITY OF:

K. A. HARUTUNIAN, P.E. — 11-01-22 DATE
TX LIC NO. 59181

SEE DISCLAIMER FOR LIMITATIONS OF USE.

CONTRACT DOCUMENTS DATED FEBRUARY 28, 2022, AS PART OF THE BIDDING DOCUMENTS (DRAWINGS AND SPECIFICATIONS) AND SUBSEQUENTLY ISSUED ADDENDA HAVE BEEN MERGED INTO ONE CONFORMING SET OF DOCUMENTS FOR THE CONVENIENCE OF THE CONTRACTOR. IF INCONSISTENCIES OR AMBIGUITIES BETWEEN "CONFORMED" DOCUMENTS AND CONTRACT DOCUMENTS ARE FOUND, THE CONTRACT DOCUMENTS SHALL GOVERN.

This document, and the designs incorporated herein, is an instrument of professional service that has been developed, designed and prepared by Harutunian Engineering, Inc., and is not to be used, in whole or in part, for any other project without giving written notice to Harutunian Engineering, Inc.

REV	DATE	BY	DESCRIPTION
			CONFORMED DOCUMENTS

DESIGNED HEI
DRAWN HEI
CHECKED HEI
DATE NOVEMBER 2022

**
ORIGINAL
SEALED BY
K.A. HARUTUNIAN
02-28-22
TX PE 59181
**

HARUTUNIAN ENGINEERING INCORPORATED
ENGINEERING AND ENVIRONMENTAL CONSULTANTS
8100 CROSS PARK DRIVE
AUSTIN, TEXAS 78754
TBPE REGISTRATION NO. F-2408

carollo®
TBPELS No. F-882

CITY OF AUSTIN

CITY OF AUSTIN
WILD HORSE RANCH WWTP EXPANSION
DEMOLITION
OPERATIONS BUILDING
PANEL SCHEDULES - DEMOLITION - 3

VERIFY SCALES
BAR IS ONE INCH ON ORIGINAL DRAWING
0 1"
IF NOT ONE INCH ON THIS SHEET, ADJUST SCALES ACCORDINGLY

JOB NO. 10976A.00
DRAWING NO. 80DE12
SHEET NO. 181 OF 464

CIRCUIT BREAKER PANEL SCHEDULE–"OP–LP–1"

VOLTS: 120/208 AMPS: 400A BUS MAIN: 300A PHASE/WIRE: 3ø, 4W

CONDUIT/WIRE DESCRIPTION	CIRCUIT BREAKER SIZE	CKT. NO.	LOAD DESCRIPTIONS	PHASE A (VA)	PHASE B (VA)	PHASE C (VA)	LOAD DESCRIPTIONS	CKT. NO.	CIRCUIT BREAKER SIZE	CONDUIT/WIRE DESCRIPTION
1–1/2"–3#2(P), 1#2(N),1#6(G)	100 3P	1	LIGHTING PANEL "OP–LP–2" SUB FEED	3603			DRY CHEMICAL FEEDER "OP–DCF–001"	2	20 3P	1"–3#10(P),1#10(G)
		3		4990	3603			4		
		5			6806	3603		6		
3/4"–2#10(P),1#10(G)	20 2P	7	OPERATIONS BUILDING EXTERIOR PERIMETER LIGHTING	1570		5150	BLOWER ROOM LIGHTING, SWITCH "a"	8	20 1P	3/4"–3#8(P),1#8(G)
		9		1000	1870		BLOWER ROOM LIGHTING, SWITCH "b"	10	20 1P	
1–1/4"–EMPTY	20 2P	11	FILTERS "FI–F–003" AND "FI–F–004" WALKWAY LIGHTING		1000	1200	ELECTRICAL ROOM LIGHTING, SWITCH "a"	12	20 1P	3/4"–2#8(P),1#8(G)
		13		--- ---		--- ---	SPARE	14	20 1P	
	20 1P	15	"FI–F–003" AND "FI–F–004" CONVENIENCE RECEPTACLE		120		EYE WASH MIXING VALVE BOX "OP–MVB–001"	16	20 1P	3/4"–2#10(P),1#10(G)
1–1/4"–2#10(P),1#10(G)	20 2P	17	RAINWATER RECOVERY PUMP		--- ---	120	EYE WASH MIXING VALVE BOX "OP–MVB–002"	18	20 1P	3/4"–2#10(P),1#10(G)
		19		--- ---		832	SPARE	20	20 1P	
	20 1P	21	SPARE		--- ---		SPARE	22	20 1P	
	20 1P	23	SPARE			--- ---	SPARE	24	20 1P	
	20 1P	25	SPARE	--- ---			SPARE	26	20 1P	
	20 1P	27	SPARE		--- ---		SPARE	28	20 1P	
	20 1P	29	SPARE			--- ---	SPARE	30	20 1P	
	20 1P	31	SPARE	--- ---			SPARE	32	20 1P	
	20 1P	33	SPARE		--- ---		SPARE	34	20 1P	
	20 1P	35	SPARE			--- ---	SPARE	36	20 1P	
	20 1P	37	SPARE	--- ---			SPARE	38	20 1P	
	20 1P	39	SPARE		--- ---		SPARE	40	20 1P	
	20 1P	41	SPARE			--- ---	SPARE	42	20 1P	
TOTAL CONNECTED VOLT AMPS (VA)				11163	13099	13433				

(1) 1–1/4"–2#10(P),1#10(G)

(1) 3/4"–2#10(P),1#10(G) and 3/4"–2#10(P),1#10(G)

KEY NOTES:

(1) CIRCUIT NUMBERS 16,18 ROUTE IN COMMON 1" CONDUIT BETWEEN "OP–LP–001" AND CORRESPONDING JUNCTION BOX.

GENERAL NOTES:

1. PANELBOARD SHORT CIRCUIT INTERRUPTING RATING IS 10000 A.I.C.
2. CONDUIT SIZE MAY INCREASE FROM THAT SHOWN FOR CONDUIT SYSTEMS ROUTED UNDERGROUND IN DUCT BANK SYSTEM, CONCEALED IN FLOOR SLAB, ETC. REFER TO THE PLANS AND THE SPECIFICATIONS FOR ADDITIONAL INFORMATION.

REFERENCE DRAWINGS:

HE–9 – ONE–LINE DIAGRAM

HE–11 – EQUIPMENT LOCATION

RECORD DRAWING

THIS CONSTRUCTION DOCUMENT WAS PREPARED USING INFORMATION SUPPLIED BY THE CONTRACTOR TO REPRESENT CONSTRUCTION CHANGES. THIS DOCUMENT IS FOR INFORMATION AND REFERENCE IN CONNECTION WITH THE OWNER'S USE AND OCCUPANCY OF THE PROJECT AND IS NOT INTENDED FOR BID, PERMIT OR CONSTRUCTION.

BY: K.A. Harutunian DATE: 1/5/2007

REUSE OF DOCUMENTS
This document and the ideas and designs incorporated herein as an instrument of professional service has been developed, designed and prepared by Harutunian Engineering, Inc. and is not to be used, in whole or part, for any other project without the written authorization of the City of Austin and Harutunian Engineering, Inc. © 2003

HARUTUNIAN ENGINEERING INCORPORATED
ENGINEERING AND ENVIRONMENTAL CONSULTANTS
305 EAST HUNTLAND DRIVE SUITE 500 AUSTIN, TEXAS 78752

NO.	DATE	REVISION	APPROV.
4			
3			
2			
1	1/5/7	RECORD DRAWING	K.A.H.

THE SEAL APPEARING ON THIS DOCUMENT WAS AUTHORIZED BY K. A. HARUTUNIAN, P.E. 59181 ON OCTOBER 18, 2003

WARNING
0 1/2 1
IF THIS BAR DOES NOT MEASURE 1" THEN DRAWING IS NOT TO SCALE

STATE OF TEXAS K. A. HARUTUNIAN 59181 REGISTERED PROFESSIONAL ENGINEER

Dsg. No. RE–35

CITY OF AUSTIN, TEXAS
NORTHEAST INTERIM WASTEWATER TREATMENT PLANT

OPERATIONS BUILDING PANEL SCHEDULES (SHEET 1 OF 3)

Turner Collie & Braden Inc.
ENGINEERS • PLANNERS • PROJECT MANAGERS

Unit PUBLIC WORKS	Scale NONE	Date OCTOBER 2003	
Designed HEI	Checked HEI	Job No. 052–122094–0008	
Drawn HEI	Approved HEI	Sheet 249/327	

GENERAL NOTES:

1. THE EXISTING INFORMATION WAS OBTAINED FROM RECORD DRAWINGS. THIS RECORD DRAWING HAS BEEN PROVIDED FOR REFERENCE ONLY FOR COORDINATION WITH THE OTHER REFERENCE AND DEMOLITION DRAWINGS PROVIDED WITHIN THIS SET. WE HAVE PROVIDED AN UPDATED PANEL SCHEDULE DEMOLITION DRAWING BASED ON FIELD OBSERVATIONS. PLEASE REFER TO DRAWING [80DE10] FOR ADDITIONAL INFORMATION.

THIS CONFORMED DOCUMENT IS RELEASED FOR THE CONVENIENCE OF THE CONTRACTOR UNDER THE AUTHORITY OF:

K. A. HARUTUNIAN, P.E. 11-01-22
TX LIC NO. 59181 DATE

SEE DISCLAIMER FOR LIMITATIONS OF USE.

CONTRACT DOCUMENTS DATED FEBRUARY 28, 2022, AS PART OF THE BIDDING DOCUMENTS (DRAWINGS AND SPECIFICATIONS) AND SUBSEQUENTLY ISSUED ADDENDA HAVE BEEN MERGED INTO ONE CONFORMING SET OF DOCUMENTS FOR THE CONVENIENCE OF THE CONTRACTOR. IF INCONSISTENCIES OR AMBIGUITIES BETWEEN "CONFORMED" DOCUMENTS AND CONTRACT DOCUMENTS ARE FOUND, THE CONTRACT DOCUMENTS SHALL GOVERN.

NOTE: DRAWING IS INTENDED FOR REFERENCE PURPOSES ONLY.

This document, and the designs incorporated herein, is an instrument of professional service that has been developed, designed and prepared by Harutunian Engineering, Inc., and is not to be used, in whole or in part, for any other project without giving written notice to Harutunian Engineering, Inc.

REV	DATE	BY	DESCRIPTION
			CONFORMED DOCUMENTS

DESIGNED HEI
DRAWN HEI
CHECKED HEI
DATE NOVEMBER 2022

** ORIGINAL SEALED BY K.A. HARUTUNIAN 02-28-22 TX PE 59181 **

HARUTUNIAN ENGINEERING INCORPORATED
ENGINEERING AND ENVIRONMENTAL CONSULTANTS
8100 CROSS PARK DRIVE AUSTIN, TEXAS 78754
TBPE REGISTRATION NO. F-2408

carollo TBPELS No. F-882

CITY OF AUSTIN FOUNDED 1839 **CITY OF AUSTIN**

CITY OF AUSTIN
WILD HORSE RANCH WWTP EXPANSION
DEMOLITION
OPERATIONS BUILDING PANEL SCHEDULES - REFERENCE - 1

VERIFY SCALES
BAR IS ONE INCH ON ORIGINAL DRAWING
0 1"
IF NOT ONE INCH ON THIS SHEET, ADJUST SCALES ACCORDINGLY

JOB NO. 10976A.00
DRAWING NO. 80DE13
SHEET NO. 182 OF 464

CIRCUIT BREAKER PANEL SCHEDULE–"OP–LP–2"

VOLTS: 120/208 AMPS: 225A BUS MAIN: 100A PHASE/WIRE: 3ø, 4W

CONDUIT/WIRE DESCRIPTION	CIRCUIT BREAKER SIZE	CKT. NO.	LOAD DESCRIPTIONS	PHASE A (VA)	PHASE B (VA)	PHASE C (VA)	LOAD DESCRIPTIONS	CKT. NO.	CIRCUIT BREAKER SIZE	CONDUIT/WIRE DESCRIPTION
④ 3/4"–2#10(P),1#10(G)	20 1P	1	RESTROOM LIGHTING	180 259			BLOWER ROOM RECEPTACLE	2	20 1P	③ 3/4"–2#8(P),1#8(G)
3/4"–2#10(P),1#10(G)	20 1P	3	REST ROOM RECEPTACLES		100 360		REST ROOM EXHAUST FAN "OP–EF–001"	4	20 1P	④ 3/4"–2#10(P),1#10(G)
② 3/4"–2#10(P),1#10(G)	20 1P	5	OFFICE EAST AND NORTH WALL RECEPACLES			180 360	STORAGE AREA SOUTH WALL RECEPTACLE	6	20 1P	① 3/4"–2#8(P),1#8(G)
3/4"–2#10(P),1#10(G)	20 1P	7	LABORATORY REFRIGERATOR RECEPTACLE	360 1440			OPERATION BUILDING EXTERIOR EAST WALL RECEPTACLE	8	20 1P	3/4"–2#10(P),1#10(G)
③ 3/4"–2#8(P),1#8(G)	20 1P	9	ELECTRICAL ROOM RECEPTACLES		1251 360		OPERATIONS BUILDING INTERIOR EGRESS LIGHTING	10	20 1P	3/4"–2#8(P),1#8(G)
④ 3/4"–2#8(P),1#8(G)	20 1P	11	OFFICE LIGHTING			--- 534	SPARE	12	20 1P	
3/4"–2#10(P),1#10(G)	20 1P	13	OPERATIONS BUILDING EMERGENCY LIGHTING	50 240			RAINWATER ULTRA–VIOLET DISINFECTION SYSTEM	14	20 1P	① 3/4"–2#10(P),1#10(G)
1"–3#10(P),1#10(G)	20 1P	15	ALUM FEED PUMP "OP–CHFP–001"		1000 120		FINAL CLARIFIER CHEMICAL SHED HEATING	16	20 1P	1–1/4"–4#6(P),1#6(G)
	20 1P	17	ALUM FEED PUMP "OP–CHFP–002"			360 120	FINAL CLARIFIER CHEMICAL SHED RECEPTACLES NORTH	18	20 1P	
EMPTY	20 1P	19	ALUM FEED PUMP "OP–CHFP–003"	360 120			FINAL CLARIFIER CHEMICAL SHED RECEPTACLES SOUTH	20	20 1P	
1"–2#10(P),1#10(G)	20 1P	21	VENTILATION LOUVER "OP–LO–001"		--- 110		FUTURE SCUM BOX LIGHTING	22	20 2P	1–1/4"–EMPTY
1–1/4"–2#4(P), 1#4(G),2#6(P) ⑤	20 1P	23	FINAL CLARIFIER "FC–FC–001" CONVENIENCE RECEPTACLE			--- 180		24		
	20 2P	25	FINAL CLARIFIER "FC–FC–001" WALKWAY LIGHTING	--- 210			FUTURE SCUM BOX RECEPTACLE	26	20 1P	
		27			--- 210		FINAL CLARIFIER "FC–FC–002" CONVENIENCE RECEPTACLE	28	20 1P	1–1/4"–EMPTY
1–1/4"–2#4(P), 1#4(G),2#6(P) ⑤	20 2P	29	FILTER "FI–F–001" WALKWAY LIGHTING			--- 833	FINAL CLARIFIER "FC–FC–002" WALKWAY LIGHTING	30	20 2P	
		31		--- 833				32		
	20 1P	33	"FI–F–001" AND "FI–F–002" CONVENIENCE RECEPTACLE		1570 180		OPERATIONS BUILDING STORAGE AREA NORTH LIGHTING	34	20 1P	1"–3#6(P),1#6(G)
1–1/4"–2#6(P),1#6(G)	20 2P	35	FILTER "FI–F–002" WALKWAY LIGHTING			1570 833	OPERATIONS BUILDING STORAGE AREA SOUTH LIGHTING	36	20 1P	
		37		105 833			RAS PUMP STATION LIGHTING	38	20 1P	
① 3/4"–2#10(P),1#10(G)	20 1P	39	OFFICE PERSONNEL REFRIGERATOR		105 1440			40	20 1P	1–1/4"–2#4(P), 1#4(G),2#6(P) ⑤
	20 1P	41	SPARE			180 ---	RAS PUMP STATION CONVENIENCE RECEPTACLE	42	20 1P	
TOTAL CONNECTED VOLT AMPS (VA)				4990	6806	5150				

KEY NOTES:

1. CIRCUIT NUMBERS 6, 14, AND 39 ROUTE IN COMMON 3/4" CONDUIT TO CONNECT TO "OP–LP–002". FURNISH AND INSTALL LARGER PHASE/GROUND CONDUCTOR WIRING (SELECTED FROM WIRING DEDICATED FOR CIRCUIT NUMBERS 6, 14, AND 39) FOR WIRING COMMON TO BOTH CIRCUITS ROUTED IN COMMON CONDUIT TO/FROM "OP–LP–002".
2. CIRCUIT NUMBERS 3,5,7 ROUTE IN COMMON 1" CONDUIT BETWEEN "OP–LP–002" AND CORRESPONDING JUNCTION BOX.
3. CIRCUIT NUMBER 2,9 ROUTE IN COMMON 3/4" CONDUIT BETWEEN "OP–LP–002" AND CORRESPONDING EQUIPMENT.
4. CIRCUIT NUMBERS 1,4, AND 11 ROUTE IN COMMON 1" CONDUIT TO CONNECT TO "OP–LP–002". FURNISH AND INSTALL LARGER PHASE/GROUND CONDUCTOR WIRING (SELECTED FROM WIRING DEDICATED FOR CIRCUIT NUMBERS 1, 4, AND 11) FOR WIRING COMMON TO BOTH CIRCUITS ROUTED IN COMMON CONDUIT TO/FROM "OP–LP–002".
5. LARGER SIZE POWER WIRING IS DEDICATED FOR CONVENIENCE RECEPTACLE WIRING.

GENERAL NOTES:

1. PANELBOARD SHORT CIRCUIT INTERRUPTING RATING IS 10000 A.I.C.
2. CONDUIT SIZE MAY INCREASE FROM THAT SHOWN FOR CONDUIT SYSTEMS ROUTED UNDERGROUND IN DUCT BANK SYSTEM, CONCEALED IN FLOOR SLAB, ETC. REFER TO THE PLANS AND THE SPECIFICATIONS FOR ADDITIONAL INFORMATION.

REFERENCE DRAWINGS:

HE–9 – ONE–LINE DIAGRAM

HE–11 – EQUIPMENT LOCATION

RECORD DRAWING
THIS CONSTRUCTION DOCUMENT WAS PREPARED USING INFORMATION SUPPLIED BY THE CONTRACTOR TO REPRESENT CONSTRUCTION CHANGES. THIS DOCUMENT IS FOR INFORMATION AND REFERENCE IN CONNECTION WITH THE OWNER'S USE AND OCCUPANCY OF THE PROJECT AND IS NOT INTENDED FOR BID, PERMIT OR CONSTRUCTION.
BY: K. A. Harutunian DATE: 1/5/2007

REUSE OF DOCUMENTS
This document and the ideas and designs incorporated herein as an instrument of professional service has been developed, designed and prepared by Harutunian Engineering, Inc. and is not to be used, in whole or part, for any other project without the written authorization of the City of Austin and Harutunian Engineering, Inc. © 2003

HARUTUNIAN ENGINEERING INCORPORATED
ENGINEERING AND ENVIRONMENTAL CONSULTANTS
305 EAST HUNTLAND DRIVE SUITE 300 AUSTIN, TEXAS 78752

NO.	DATE	REVISION	APPROV.
4			
3			
2			
1			

WARNING
0 1/2 1
IF THIS BAR DOES NOT MEASURE 1" THEN DRAWING IS NOT TO SCALE

K. A. HARUTUNIAN 59181 REGISTERED PROFESSIONAL ENGINEER STATE OF TEXAS
10/17/2003

Dwg. No. RE–36

CITY OF AUSTIN, TEXAS
NORTHEAST INTERIM WASTEWATER TREATMENT PLANT

OPERATIONS BUILDING PANEL SCHEDULES (SHEET 2 OF 3)

Turner Collie & Braden Inc.
ENGINEERS • PLANNERS • PROJECT MANAGERS

Unit PUBLIC WORKS	Scale NONE	Date OCTOBER 2003	
Designed HEI	Checked HEI	Job No. 052–122094–0008	
Drawn HEI	Approved HEI	Sheet 250/327	

THIS CONFORMED DOCUMENT IS RELEASED FOR THE CONVENIENCE OF THE CONTRACTOR UNDER THE AUTHORITY OF:

K. A. Harutunian 11-01-22

K. A. HARUTUNIAN, P.E. DATE
TX LIC NO. 59181

SEE DISCLAIMER FOR LIMITATIONS OF USE.

CONTRACT DOCUMENTS DATED FEBRUARY 28, 2022, AS PART OF THE BIDDING DOCUMENTS (DRAWINGS AND SPECIFICATIONS) AND SUBSEQUENTLY ISSUED ADDENDA HAVE BEEN MERGED INTO ONE CONFORMING SET OF DOCUMENTS FOR THE CONVENIENCE OF THE CONTRACTOR. IF INCONSISTENCIES OR AMBIGUITIES BETWEEN "CONFORMED" DOCUMENTS AND CONTRACT DOCUMENTS ARE FOUND, THE CONTRACT DOCUMENTS SHALL GOVERN.

NOTE: DRAWING IS INTENDED FOR REFERENCE PURPOSES ONLY.

This document, and the designs incorporated herein, is an instrument of professional service that has been developed, designed and prepared by Harutunian Engineering, Inc., and is not to be used, in whole or in part, for any other project without giving written notice to Harutunian Engineering, Inc.

REV	DATE	BY	DESCRIPTION
			CONFORMED DOCUMENTS

DESIGNED HEI
DRAWN HEI
CHECKED HEI
DATE NOVEMBER 2022

** ORIGINAL SEALED BY K.A. HARUTUNIAN 02-28-22 TX PE 59181 **

HARUTUNIAN ENGINEERING INCORPORATED
ENGINEERING AND ENVIRONMENTAL CONSULTANTS
8100 CROSS PARK DRIVE AUSTIN, TEXAS 78754 TBPE REGISTRATION NO. F-2408

carollo TBPELS No. F-882

CITY OF AUSTIN FOUNDED 1839 **CITY OF AUSTIN**

CITY OF AUSTIN
WILD HORSE RANCH WWTP EXPANSION
DEMOLITION
OPERATIONS BUILDING PANEL SCHEDULES - REFERENCE - 2

VERIFY SCALES
BAR IS ONE INCH ON ORIGINAL DRAWING
0 1"
IF NOT ONE INCH ON THIS SHEET, ADJUST SCALES ACCORDINGLY

JOB NO. 10976A.00
DRAWING NO. 80DE14
SHEET NO. 183 OF 464

CIRCUIT BREAKER PANEL SCHEDULE– ~~"OP–LP–1"~~ "OP-CPP-001" (1)

VOLTS: 120/208 AMPS: 225A BUS MAIN: 100A PHASE/WIRE: 3ø, 4W

CONDUIT/WIRE DESCRIPTION	CIRCUIT BREAKER SIZE	CKT. NO.	LOAD DESCRIPTIONS	PHASE A (VA)	PHASE B (VA)	PHASE C (VA)	LOAD DESCRIPTIONS	CKT. NO.	CIRCUIT BREAKER SIZE	CONDUIT/WIRE DESCRIPTION
1"–4#10(P), 1#10(G),1#10(IG)	20 1P	1	INDICATOR/TRANSMITTER CONTROLLERS	955 / 951			INDICATOR/TRANSMITTER CONTROLLERS	2	20 1P	1"–4#10(P),1#10(G),1#10(IG)
1"–2#10(P),1#10(G),1#10(IG)	20 1P	3	LABORATORY COUNTER RECEPTACLES		888 / 50		24VDC INSTRUMENT LOOP POWER SUPPLY	4	20 1P	
1"–4#10(P),1#10(G),1#10(IG)	20 1P	5	GENERAL PURPOSE CONTROL LOGIC			600 / 90	"OP–PAB–001,2&3" CONTROL LOGIC POWER	6	30 1P	1"–1#10(P),1#10(G),1#10(IG) (1)
	20 1P	7	PLC RACK R01 I/O "OP–PLC–R01"	600 / 260			SPARE	8	20 1P	
	20 1P	9	PLC RACK R02 I/O "OP–PLC–R02"		600 / 233		SPARE	10	20 1P	
	20 1P	11	LIGHTING PANEL "OP–LP–2" SUB FEED			900 / 50	UNINTERRUPTIBLE POWER SUPPLY "OP–UPS–01"	12	20 1P	
	20 1P	13	SPARE	571 / --- ---			"OP–MCP–001" LIGHTING SECTIONS 1–7	14	20 1P	1"–4#10(P),1#10(G),1(IG)
	20 1P	15	SPARE		1440 / --- ---		"OP–MCP–001" RECEPTACLES SECTIONS 1–7	16	20 1P	
(1)	20 1P	17	SPARE			445 / --- ---	"OP–MCP–001" VENTILATION FANS SECTIONS 1–7	18	20 1P	
	20 1P	19	SPARE	--- --- / --- ---			SPARE	20	20 1P	
	20 1P	21	SPARE		--- --- / --- ---		SPARE	22	20 1P	
	20 1P	23	SPARE			--- --- / --- ---	SPARE	24	20 1P	
	20 1P	25	SPARE	--- --- / --- ---			SPARE	26	20 1P	
	20 1P	27	SPARE		--- --- / --- ---		SPARE	28	20 1P	
	20 1P	29	SPARE			--- --- / --- ---	SPARE	30	20 1P	
	20 1P	31	SPARE	--- --- / --- ---			SPARE	32	20 1P	
	20 1P	33	SPARE		--- --- / --- ---		SPARE	34	20 1P	
	20 1P	35	SPARE			--- --- / --- ---	SPARE	36	20 1P	
	20 1P	37	SPARE	--- --- / --- ---			SPARE	38	20 1P	
	20 1P	39	SPARE		--- --- / --- ---		SPARE	40	20 1P	
	20 1P	41	SPARE			--- --- / --- ---	SPARE	42	20 1P	
TOTAL CONNECTED VOLT AMPS (VA)				3337	3211	2085				

(1)

KEY NOTES:

(1) FURNISH AND INSTALL PANELBOARD WITH ISOLATED GROUND BUS BAR. ALSO REFER TO ELECTRICAL SPECIFICATIONS FOR ADDITIONAL INFORMATION.

(2) CIRCUIT NUMBERS 2,4, AND 12 ROUTE IN COMMON CONDUIT BETWEEN "OP–CPP–001" AND "OP–MCP–001".

(3) CIRCUIT NUMBERS 1 AND 11 ROUTE IN COMMON CONDUIT BETWEEN "OP–CPP–001" AND "OP–MCP–001".

GENERAL NOTES:

1. PANELBOARD SHORT CIRCUIT INTERRUPTING RATING IS 10000 A.I.C.
2. CONDUIT SIZE MAY INCREASE FROM THAT SHOWN FOR CONDUIT SYSTEMS ROUTED UNDERGROUND IN DUCT BANK SYSTEM, CONCEALED IN FLOOR SLAB, ETC. REFER TO THE PLANS AND THE SPECIFICATIONS FOR ADDITIONAL INFORMATION.

REFERENCE DRAWINGS:

HE–9 – ONE–LINE DIAGRAM

HE–11 – EQUIPMENT LOCATION

RECORD DRAWING

THIS CONSTRUCTION DOCUMENT WAS PREPARED USING INFORMATION SUPPLIED BY THE CONTRACTOR TO REPRESENT CONSTRUCTION CHANGES. THIS DOCUMENT IS FOR INFORMATION AND REFERENCE IN CONNECTION WITH THE OWNER'S USE AND OCCUPANCY OF THE PROJECT AND IS NOT INTENDED FOR BID, PERMIT OR CONSTRUCTION.

BY: K.A. Harutunian DATE: 1/5/2007

REUSE OF DOCUMENTS
This document and the ideas and designs incorporated herein as an instrument of professional service has been developed, designed and prepared by Harutunian Engineering, Inc. and is not to be used, in whole or part, for any other project without the written authorization of the City of Austin and Harutunian Engineering, Inc. © 2003

HARUTUNIAN ENGINEERING INCORPORATED
ENGINEERING AND ENVIRONMENTAL CONSULTANTS
305 EAST HUNTLAND DRIVE SUITE 300
AUSTIN, TEXAS 78752

NO.	DATE	REVISION	APPROV.
4			
3			
2			
1	1/5/7	RECORD DRAWING	K.A.H.

THE SEAL APPEARING ON THIS DOCUMENT WAS AUTHORIZED BY K. A. HARUTUNIAN, P.E. 59181 ON OCTOBER 18, 2003

WARNING 0 1/2 1 IF THIS BAR DOES NOT MEASURE 1" THEN DRAWING IS NOT TO SCALE

STATE OF TEXAS K. A. HARUTUNIAN 59181 REGISTERED PROFESSIONAL ENGINEER

Dwg. No. RE–37

CITY OF AUSTIN, TEXAS
NORTHEAST INTERIM WASTEWATER TREATMENT PLANT

OPERATIONS BUILDING PANEL SCHEDULES (SHEET 1 OF 3)

Turner Collie & Braden Inc.
ENGINEERS • PLANNERS • PROJECT MANAGERS

Unit PUBLIC WORKS	Scale NONE	Date OCTOBER 2003	
Designed HEI	Checked HEI	Job No. 052–122094–0008	
Drawn HEI	Approved HEI	Sheet 251/327	

KEY NOTES

(1) THE EXISTING PANELBOARD IS TAGGED "OP-CPP-01".

GENERAL NOTES:

1. THE EXISTING INFORMATION WAS OBTAINED FROM RECORD DRAWINGS . THIS RECORD DRAWING HAS BEEN PROVIDED FOR REFERENCE ONLY FOR COORDINATION WITH THE OTHER REFERENCE AND DEMOLITION DRAWINGS PROVIDED WITHIN THIS SET. WE HAVE PROVIDED AN UPDATED PANEL SCHEDULE DEMOLITION DRAWING BASED ON FIELD OBSERVATIONS. PLEASE REFER TO DRAWING [80DE12] FOR ADDITIONAL INFORMATION.

THIS CONFORMED DOCUMENT IS RELEASED FOR THE CONVENIENCE OF THE CONTRACTOR UNDER THE AUTHORITY OF:

K. A. HARUTUNIAN, P.E. 11-01-22
TX LIC NO. 59181 DATE

SEE DISCLAIMER FOR LIMITATIONS OF USE.

CONTRACT DOCUMENTS DATED FEBRUARY 28, 2022, AS PART OF THE BIDDING DOCUMENTS (DRAWINGS AND SPECIFICATIONS) AND SUBSEQUENTLY ISSUED ADDENDA HAVE BEEN MERGED INTO ONE CONFORMING SET OF DOCUMENTS FOR THE CONVENIENCE OF THE CONTRACTOR. IF INCONSISTENCIES OR AMBIGUITIES BETWEEN "CONFORMED" DOCUMENTS AND CONTRACT DOCUMENTS ARE FOUND, THE CONTRACT DOCUMENTS SHALL GOVERN.

NOTE: DRAWING IS INTENDED FOR REFERENCE PURPOSES ONLY.

This document, and the designs incorporated herein, is an instrument of professional service that has been developed, designed and prepared by Harutunian Engineering, Inc., and is not to be used, in whole or in part, for any other project without giving written notice to Harutunian Engineering, Inc.

REV	DATE	BY	DESCRIPTION
			CONFORMED DOCUMENTS

DESIGNED HEI
DRAWN HEI
CHECKED HEI
DATE NOVEMBER 2022

** ORIGINAL SEALED BY K.A. HARUTUNIAN 02-28-22 TX PE 59181 **

HARUTUNIAN ENGINEERING INCORPORATED
ENGINEERING AND ENVIRONMENTAL CONSULTANTS
8100 CROSS PARK DRIVE AUSTIN, TEXAS 78754 TBPE REGISTRATION NO. F-2408

carollo TBPELS No. F-882

CITY OF AUSTIN FOUNDED 1839

CITY OF AUSTIN

CITY OF AUSTIN
WILD HORSE RANCH WWTP EXPANSION
DEMOLITION
OPERATIONS BUILDING PANEL SCHEDULES - REFERENCE - 3

VERIFY SCALES
BAR IS ONE INCH ON ORIGINAL DRAWING
0 1"
IF NOT ONE INCH ON THIS SHEET, ADJUST SCALES ACCORDINGLY

JOB NO. 10976A.00
DRAWING NO. 80DE15
SHEET NO. 184 OF 464

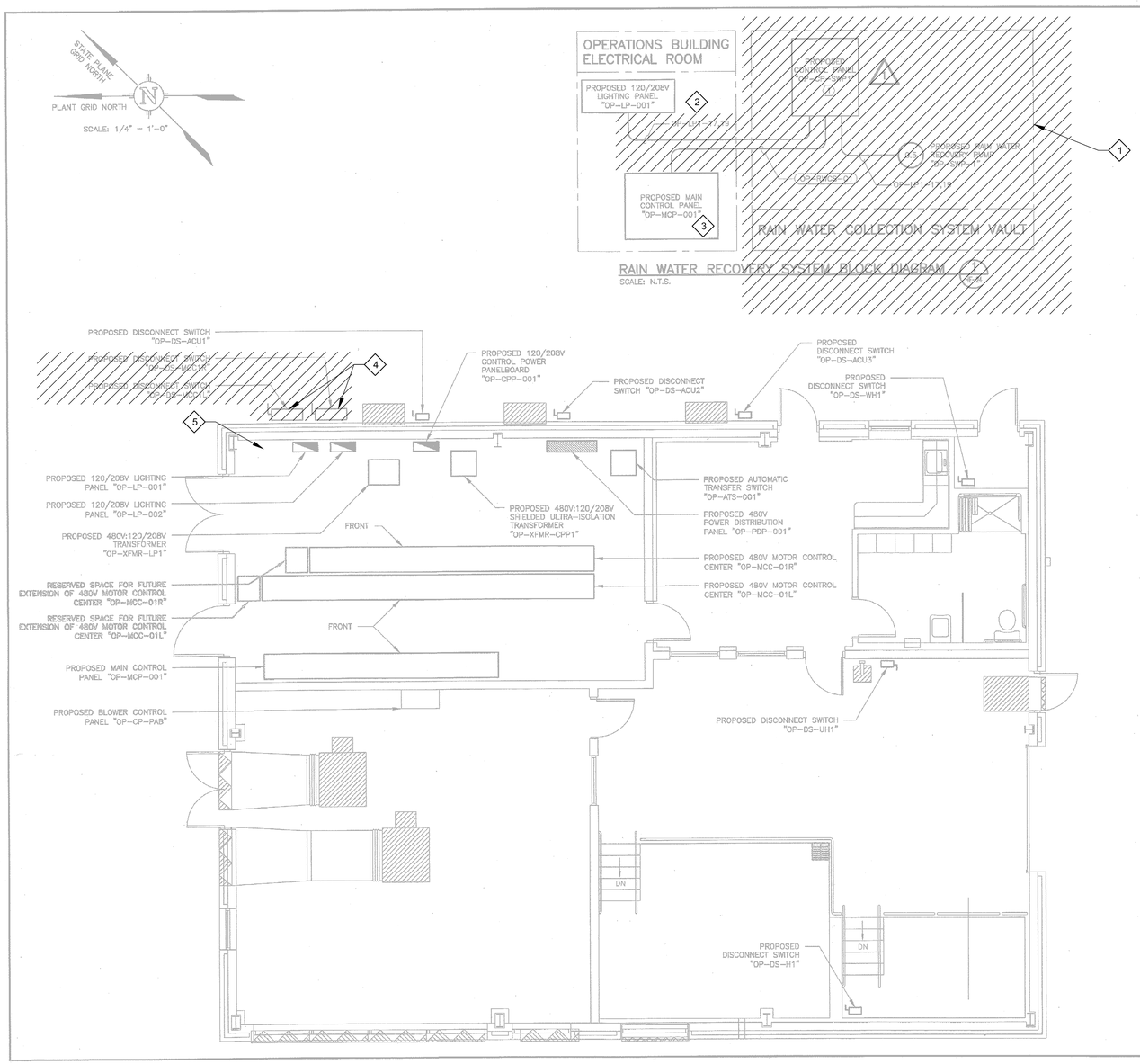

KEY NOTES:

1. CONTROL PANEL CONTAINS PROPOSED DISCONNECT SWITCH "OP-BKR-SWP1" AND PROPOSED BUCK/BOOST TRANSFORMER "OP-XFMR-SWP1".

GENERAL NOTES:

1. NOT ALL ELECTRICAL/MECHANICAL/STRUCTURAL/CIVIL COMPONENTS ARE SHOWN ON THIS DRAWING. REFER TO ELECTRICAL/MECHANICAL/STRUCTURAL/CIVIL DRAWINGS, AS APPLICABLE, FOR ADDITIONAL INFORMATION.
2. THE LOCATIONS AND SIZES OF EQUIPMENT SHOWN ARE APPROXIMATE. THE CONTRACTOR SHALL FIELD VERIFY CONDITIONS PRIOR TO COMMENCING CONSTRUCTION.
3. THE ACTUAL REQUIRED SIZE OF THE CONDUIT ENTRANCE AREAS FOR ALL EQUIPMENT IS TO BE DETERMINED BY THE EQUIPMENT MANUFACTURER. THE LOCATION AND SIZE OF CONDUIT ENTRANCE AREAS OF MOTOR CONTROL CENTERS, TRANSFORMERS, SWITCHBOARDS, ETC. SHALL BE CLOSELY AND CAREFULLY COORDINATED WITH THE EQUIPMENT MANUFACTURER. REFER TO APPLICABLE CIVIL/STRUCTURAL/ELECTRICAL/ETC. DRAWINGS.
4. DARK LINEWORK DENOTES PROPOSED EQUIPMENT. LIGHT LINEWORK DENOTES FUTURE EQUIPMENT.
5. CONTRACTOR SHALL CLOSELY AND CAREFULLY COORDINATE ROUTE OF PROPOSED CONDUIT/WIRE WITH PROPOSED CIVIL/MECHANICAL/STRUCTURAL/ELECTRICAL SYSTEMS/COMPONENTS/EQUIPMENT/UTILITIES, ETC.

REFERENCE DRAWINGS:

HE-10 – 480V MCC FRONT ELEVATIONS

QE-2 – MAIN CONTROL PANEL FRONT ELEVATIONS

HH-1 – HVAC FLOOR PLAN

HM-1 – MECHANICAL FLOOR PLAN

RECORD DRAWING

THIS CONSTRUCTION DOCUMENT WAS PREPARED USING INFORMATION SUPPLIED BY THE CONTRACTOR TO REPRESENT CONSTRUCTION CHANGES. THIS DOCUMENT IS FOR INFORMATION AND REFERENCE IN CONNECTION WITH THE OWNER'S USE AND OCCUPANCY OF THE PROJECT AND IS NOT INTENDED FOR BID, PERMIT OR CONSTRUCTION.

BY: K. A. Harutunian DATE: 1/5/2007

KEY NOTES

1. DISCONNECT AND REMOVE RAIN WATER COLLECTION SYSTEM AND ASSOCIATED EQUIPMENT IN ITS ENTIRETY. REFER TO DEMOLITION FLOOR PLAN DRAWING NO. [80DE25] FOR ADDITIONAL INFORMATION.
2. RECORD DRAWINGS INDICATE THAT CIRCUITS LP1-17, 19 POWERS THE EXISTING RAIN WATER SYSTEM. HOWEVER, BASED ON FIELD OBSERVATIONS THE ACTUAL CIRCUIT NUMBERS POWERING THE EXISTING RAIN WATER SYSTEM AND WATER PUMP "OP-SWP-001" ARE LP1-36,38. CONTRACTOR SHALL FIELD VERIFY EXISTING CONDITIONS PRIOR TO COMMENCING DEMOLITION ACTIVITIES. REFER TO DEMOLITION PANEL SCHEDULE ON DRAWING NO. [80DE10] AND [80DE13] FOR ADDITIONAL INFORMATION.
3. DISCONNECT AND REMOVE THE RAIN WATER COLLECTION SYSTEM WATER PUMP CONTROL LOGIC HOUSED WITHIN THE MAIN CONTROL PANEL IN ITS ENTIRETY. REFER TO DEMOLITION CONTROL WIRING SCHEMATIC ON DRAWING NO. [80DN18] FOR ADDITIONAL INFORMATION.
4. DISCONNECT AND REMOVE EXISTING GENERATOR DISCONNECT SWITCHES AND ASSOCIATED CONDUIT/WIRE, MOUNTED HARDWARE, CONCRETE PAD, ETC. IN ITS ENTIRETY.
5. DISCONNECT AND REMOVE EXISTING POWER DISTRIBUTION PANEL "UV-PANEL-PDP" AND EXISTING UV DEDICATED ATS SWITCH TAGGED "UV-ATS" IN THEIR ENTIRETY. REFER TO DETAILED DEMOLITION ONE-LINE DIAGRAM ON DRAWING NO. [80DE06] FOR ADDITIONAL INFORMATION.

REUSE OF DOCUMENTS
This document and the ideas and designs incorporated herein as an instrument of professional service has been developed, designed and prepared by Harutunian Engineering, Inc. and is not to be used, in whole or part, for any other project without the written authorization of the City of Austin and Harutunian Engineering, Inc. © 2003

HARUTUNIAN ENGINEERING INCORPORATED
ENGINEERING AND ENVIRONMENTAL CONSULTANTS
305 EAST HUNTLAND DRIVE SUITE 500 AUSTIN, TEXAS 78752

NO.	DATE	REVISION	APPROV.
4			
3			
2			
1	1/5/7	RECORD DRAWING	K.A.H.

THE SEAL APPEARING ON THIS DOCUMENT WAS AUTHORIZED BY K. A. HARUTUNIAN, P.E. 59181 ON OCTOBER 15, 2003

WARNING
0 1/2 1
IF THIS BAR DOES NOT MEASURE 1" THEN DRAWING IS NOT TO SCALE

STATE OF TEXAS K. A. HARUTUNIAN 59181 REGISTERED PROFESSIONAL ENGINEER

Dsg. No. HE-11

CITY OF AUSTIN, TEXAS
NORTHEAST INTERIM WASTEWATER TREATMENT PLANT

OPERATIONS BUILDING EQUIPMENT LOCATION PLAN

Turner Collie & Braden Inc.
ENGINEERS • PLANNERS • PROJECT MANAGERS

Unit PUBLIC WORKS	Scale 1/4"=1'-0"	Date OCTOBER 2003	
Designed HEI	Checked HEI	Job No. 052-12209A-0008	
Drawn HEI	Approved HEI	Sheet 194/327	

THIS CONFORMED DOCUMENT IS RELEASED FOR THE CONVENIENCE OF THE CONTRACTOR UNDER THE AUTHORITY OF:

K. A. Harutunian — 11-01-22

K. A. HARUTUNIAN, P.E. TX LIC NO. 59181 — DATE

SEE DISCLAIMER FOR LIMITATIONS OF USE.

CONTRACT DOCUMENTS DATED FEBRUARY 28, 2022, AS PART OF THE BIDDING DOCUMENTS (DRAWINGS AND SPECIFICATIONS) AND SUBSEQUENTLY ISSUED ADDENDA HAVE BEEN MERGED INTO ONE CONFORMING SET OF DOCUMENTS FOR THE CONVENIENCE OF THE CONTRACTOR. IF INCONSISTENCIES OR AMBIGUITIES BETWEEN "CONFORMED" DOCUMENTS AND CONTRACT DOCUMENTS ARE FOUND, THE CONTRACT DOCUMENTS SHALL GOVERN.

This document, and the designs incorporated herein, is an instrument of professional service that has been developed, designed and prepared by Harutunian Engineering, Inc., and is not to be used, in whole or in part, for any other project without giving written notice to Harutunian Engineering, Inc.

REV	DATE	BY	DESCRIPTION
			CONFORMED DOCUMENTS

DESIGNED HEI
DRAWN HEI
CHECKED HEI
DATE NOVEMBER 2022

** ORIGINAL SEALED BY K.A. HARUTUNIAN 02-28-22 TX PE 59181 **

HARUTUNIAN ENGINEERING INCORPORATED
ENGINEERING AND ENVIRONMENTAL CONSULTANTS
8100 CROSS PARK DRIVE AUSTIN, TEXAS 78754
TBPE REGISTRATION NO. F-2408

carollo TBPELS No. F-882

CITY OF AUSTIN FOUNDED 1839 **CITY OF AUSTIN**

CITY OF AUSTIN
WILD HORSE RANCH WWTP EXPANSION
DEMOLITION
RAIN WATER COLLECTION SYSTEM BLOCK DIAGRAM - DEMOLITION

VERIFY SCALES
BAR IS ONE INCH ON ORIGINAL DRAWING
0 1"
IF NOT ONE INCH ON THIS SHEET, ADJUST SCALES ACCORDINGLY

JOB NO. 10976A.00
DRAWING NO. 80DE16
SHEET NO. 185 OF 464

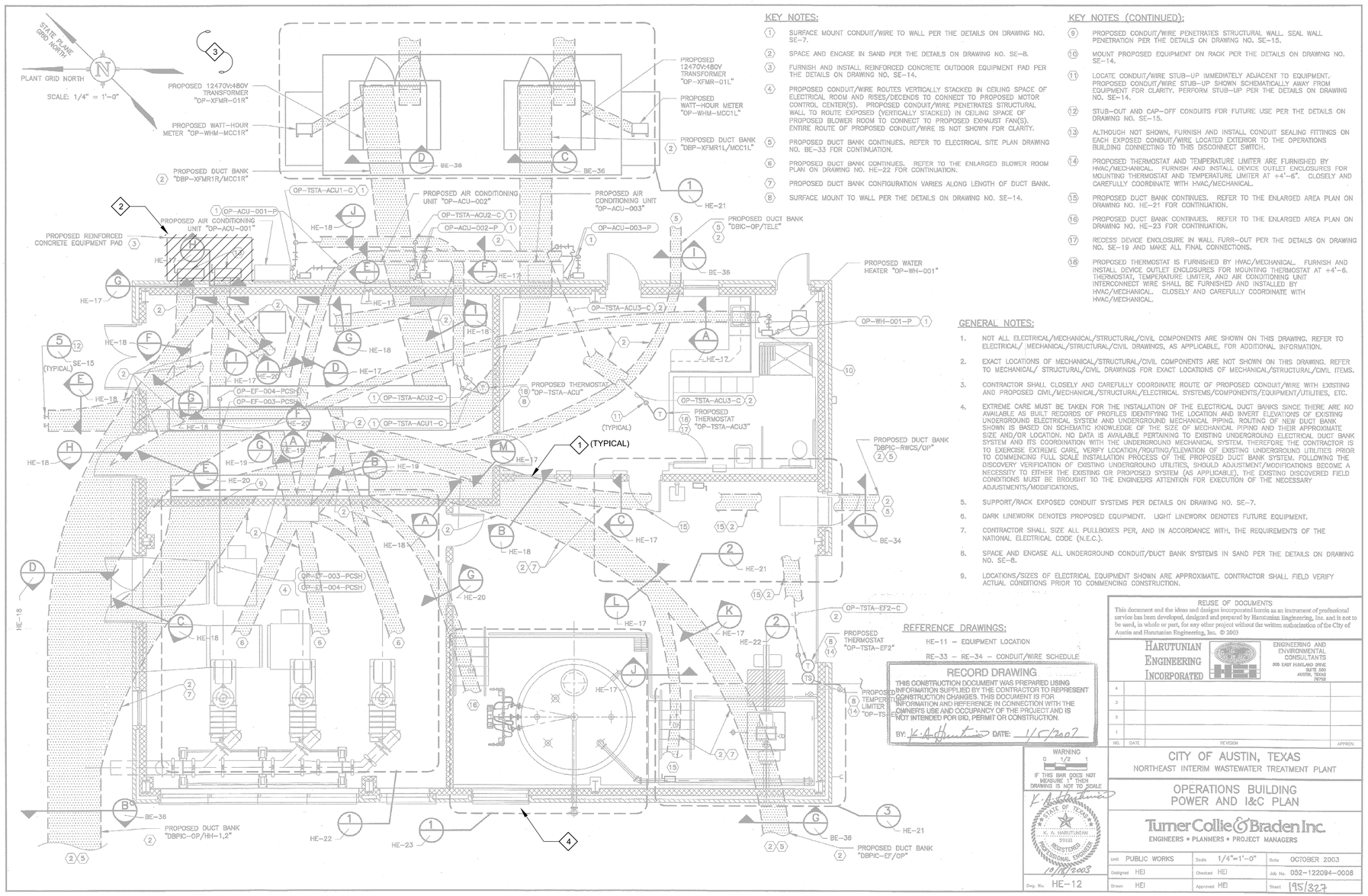

KEY NOTES:

1. SURFACE MOUNT CONDUIT/WIRE TO WALL PER THE DETAILS ON DRAWING NO. SE-7.
2. SPACE AND ENCASE IN SAND PER THE DETAILS ON DRAWING NO. SE-8.
3. FURNISH AND INSTALL REINFORCED CONCRETE OUTDOOR EQUIPMENT PAD PER THE DETAILS ON DRAWING NO. SE-14.
4. PROPOSED CONDUIT/WIRE ROUTES VERTICALLY STACKED IN CEILING SPACE OF ELECTRICAL ROOM AND RISES/DECENDS TO CONNECT TO PROPOSED MOTOR CONTROL CENTER(S). PROPOSED CONDUIT/WIRE PENETRATES STRUCTURAL WALL TO ROUTE EXPOSED (VERTICALLY STACKED) IN CEILING SPACE OF PROPOSED BLOWER ROOM TO CONNECT TO PROPOSED EXHAUST FAN(S). ENTIRE ROUTE OF PROPOSED CONDUIT/WIRE IS NOT SHOWN FOR CLARITY.
5. PROPOSED DUCT BANK CONTINUES. REFER TO ELECTRICAL SITE PLAN DRAWING NO. BE-33 FOR CONTINUATION.
6. PROPOSED DUCT BANK CONTINUES. REFER TO THE ENLARGED BLOWER ROOM PLAN ON DRAWING NO. HE-22 FOR CONTINUATION.
7. PROPOSED DUCT BANK CONFIGURATION VARIES ALONG LENGTH OF DUCT BANK.
8. SURFACE MOUNT TO WALL PER THE DETAILS ON DRAWING NO. SE-14.

KEY NOTES (CONTINUED):

9. PROPOSED CONDUIT/WIRE PENETRATES STRUCTURAL WALL. SEAL WALL PENETRATION PER THE DETAILS ON DRAWING NO. SE-15.
10. MOUNT PROPOSED EQUIPMENT ON RACK PER THE DETAILS ON DRAWING NO. SE-14.
11. LOCATE CONDUIT/WIRE STUB-UP IMMEDIATELY ADJACENT TO EQUIPMENT. PROPOSED CONDUIT/WIRE STUB-UP SHOWN SCHEMATICALLY AWAY FROM EQUIPMENT FOR CLARITY. PERFORM STUB-UP PER THE DETAILS ON DRAWING NO. SE-14.
12. STUB-OUT AND CAP-OFF CONDUITS FOR FUTURE USE PER THE DETAILS ON DRAWING NO. SE-15.
13. ALTHOUGH NOT SHOWN, FURNISH AND INSTALL CONDUIT SEALING FITTINGS ON EACH EXPOSED CONDUIT/WIRE LOCATED EXTERIOR TO THE OPERATIONS BUILDING CONNECTING TO THIS DISCONNECT SWITCH.
14. PROPOSED THERMOSTAT AND TEMPERATURE LIMITER ARE FURNISHED BY HVAC/MECHANICAL. FURNISH AND INSTALL DEVICE OUTLET ENCLOSURES FOR MOUNTING THERMOSTAT AND TEMPERATURE LIMITER AT +4'-6". CLOSELY AND CAREFULLY COORDINATE WITH HVAC/MECHANICAL.
15. PROPOSED DUCT BANK CONTINUES. REFER TO THE ENLARGED AREA PLAN ON DRAWING NO. HE-21 FOR CONTINUATION.
16. PROPOSED DUCT BANK CONTINUES. REFER TO THE ENLARGED AREA PLAN ON DRAWING NO. HE-23 FOR CONTINUATION.
17. RECESS DEVICE ENCLOSURE IN WALL FURR-OUT PER THE DETAILS ON DRAWING NO. SE-19 AND MAKE ALL FINAL CONNECTIONS.
18. PROPOSED THERMOSTAT IS FURNISHED BY HVAC/MECHANICAL. FURNISH AND INSTALL DEVICE OUTLET ENCLOSURES FOR MOUNTING THERMOSTAT AT +4'-6. THERMOSTAT, TEMPERATURE LIMITER, AND AIR CONDITIONING UNIT INTERCONNECT WIRE SHALL BE FURNISHED AND INSTALLED BY HVAC/MECHANICAL. CLOSELY AND CAREFULLY COORDINATE WITH HVAC/MECHANICAL.

GENERAL NOTES:

1. NOT ALL ELECTRICAL/MECHANICAL/STRUCTURAL/CIVIL COMPONENTS ARE SHOWN ON THIS DRAWING. REFER TO ELECTRICAL/ MECHANICAL/STRUCTURAL/CIVIL DRAWINGS, AS APPLICABLE, FOR ADDITIONAL INFORMATION.
2. EXACT LOCATIONS OF MECHANICAL/STRUCTURAL/CIVIL COMPONENTS ARE NOT SHOWN ON THIS DRAWING. REFER TO MECHANICAL/ STRUCTURAL/CIVIL DRAWINGS FOR EXACT LOCATIONS OF MECHANICAL/STRUCTURAL/CIVIL ITEMS.
3. CONTRACTOR SHALL CLOSELY AND CAREFULLY COORDINATE ROUTE OF PROPOSED CONDUIT/WIRE WITH EXISTING AND PROPOSED CIVIL/MECHANICAL/STRUCTURAL/ELECTRICAL SYSTEMS/COMPONENTS/EQUIPMENT/UTILITIES, ETC.
4. EXTREME CARE MUST BE TAKEN FOR THE INSTALLATION OF THE ELECTRICAL DUCT BANKS SINCE THERE ARE NO AVAILABLE AS BUILT RECORDS OF PROFILES IDENTIFYING THE LOCATION AND INVERT ELEVATIONS OF EXISTING UNDERGROUND ELECTRICAL SYSTEM AND UNDERGROUND MECHANICAL PIPING. ROUTING OF NEW DUCT BANK SHOWN IS BASED ON SCHEMATIC KNOWLEDGE OF THE SIZE OF MECHANICAL PIPING AND THEIR APPROXIMATE SIZE AND/OR LOCATION. NO DATA IS AVAILABLE PERTAINING TO EXISTING UNDERGROUND ELECTRICAL DUCT BANK SYSTEM AND ITS COORDINATION WITH THE UNDERGROUND MECHANICAL SYSTEM. THEREFORE THE CONTRACTOR IS TO EXERCISE EXTREME CARE, VERIFY LOCATION/ROUTING/ELEVATION OF EXISTING UNDERGROUND UTILITIES PRIOR TO COMMENCING FULL SCALE INSTALLATION PROCESS OF THE PROPOSED DUCT BANK SYSTEM. FOLLOWING THE DISCOVERY VERIFICATION OF EXISTING UNDERGROUND UTILITIES, SHOULD ADJUSTMENT/MODIFICATIONS BECOME A NECESSITY TO EITHER THE EXISTING OR PROPOSED SYSTEM (AS APPLICABLE), THE EXISTING DISCOVERED FIELD CONDITIONS MUST BE BROUGHT TO THE ENGINEERS ATTENTION FOR EXECUTION OF THE NECESSARY ADJUSTMENTS/MODIFICATIONS.
5. SUPPORT/RACK EXPOSED CONDUIT SYSTEMS PER DETAILS ON DRAWING NO. SE-7.
6. DARK LINEWORK DENOTES PROPOSED EQUIPMENT. LIGHT LINEWORK DENOTES FUTURE EQUIPMENT.
7. CONTRACTOR SHALL SIZE ALL PULLBOXES PER, AND IN ACCORDANCE WITH, THE REQUIREMENTS OF THE NATIONAL ELECTRICAL CODE (N.E.C.).
8. SPACE AND ENCASE ALL UNDERGROUND CONDUIT/DUCT BANK SYSTEMS IN SAND PER THE DETAILS ON DRAWING NO. SE-8.
9. LOCATIONS/SIZES OF ELECTRICAL EQUIPMENT SHOWN ARE APPROXIMATE. CONTRACTOR SHALL FIELD VERIFY ACTUAL CONDITIONS PRIOR TO COMMENCING CONSTRUCTION.

REFERENCE DRAWINGS:

HE-11 – EQUIPMENT LOCATION
RE-33 – RE-34 – CONDUIT/WIRE SCHEDULE

RECORD DRAWING
THIS CONSTRUCTION DOCUMENT WAS PREPARED USING INFORMATION SUPPLIED BY THE CONTRACTOR TO REPRESENT CONSTRUCTION CHANGES. THIS DOCUMENT IS FOR INFORMATION AND REFERENCE IN CONNECTION WITH THE OWNER'S USE AND OCCUPANCY OF THE PROJECT AND IS NOT INTENDED FOR BID, PERMIT OR CONSTRUCTION.
BY: K.A. Harutunian DATE: 1/6/2007

REUSE OF DOCUMENTS
This document and the ideas and designs incorporated herein as an instrument of professional service has been developed, designed and prepared by Harutunian Engineering, Inc. and is not to be used, in whole or part, for any other project without the written authorization of the City of Austin and Harutunian Engineering, Inc. © 2003

HARUTUNIAN ENGINEERING INCORPORATED
ENGINEERING AND ENVIRONMENTAL CONSULTANTS
3001 EAST HIGHLAND DRIVE SUITE 200 AUSTIN, TEXAS 78723

NO.	DATE	REVISION	APPROV.
4			
3			
2			
1			

WARNING
0 1/2 1
IF THIS BAR DOES NOT MEASURE 1" THEN DRAWING IS NOT TO SCALE

K.A. HARUTUNIAN 59188 REGISTERED PROFESSIONAL ENGINEER STATE OF TEXAS
10/1/2003

Dwg. No. HE-12

CITY OF AUSTIN, TEXAS
NORTHEAST INTERIM WASTEWATER TREATMENT PLANT
OPERATIONS BUILDING
POWER AND I&C PLAN

Turner Collie & Braden Inc.
ENGINEERS • PLANNERS • PROJECT MANAGERS

Unit PUBLIC WORKS	Scale 1/4"=1'-0"	Date OCTOBER 2003	
Designed HEI	Checked HEI	Job No. 052-122094-0008	
Drawn HEI	Approved HEI	Sheet 195/327	

KEY NOTES

1. REFER TO DUCT BANK SECTION DEMOLITION SHEETS [80DE26] THROUGH [80DE29] FOR DEMOLITION DETAILS FOR THE EXISTING DUCT BANKS.
2. DISCONNECT AND REMOVE EXISTING GENERATOR DISCONNECT SWITCHES AND ASSOCIATED CONDUIT/WIRE, MOUNTED HARDWARE, CONCRETE PAD, ETC. IN ITS ENTIRETY.
3. THERE IS AN EXISTING GENERATOR "OP-GEN-01" TO REMAIN AND BE REUSED DURING RENOVATION ACTIVITIES. IT IS NOT SHOWN ON THIS RECORD DRAWING. REFER TO DEMOLITION PLAN DRAWING [80DE18] FOR ADDITIONAL INFORMATION.
4. BASED ON FIELD OBSERVATIONS, A TEMPORARY PULLBOX IS LOCATED IN THIS AREA ON THE OUTSIDE WALL OF THE OPS BUILDING WHICH PROVIDES TEMPORARY POWER TO THE TEMPORARY FILTER SYSTEM. IT APPEARS THAT A POWER CONDUIT, A SPARE POWER CONDUIT, AND TWO CONTROL CONDUITS EXIT THE BOTTOM OF THE PULLBOX AND ROUTE INTO AN EXISTING UNDERGROUND DUCT BANK TO THE TEMPORARY FILTER AREA. DISCONNECT AND REMOVE EXISTING TEMPORARY PULLBOX AND UNDERGROUND DUCT BANK FROM THE OPERATIONS BUILDING TO THE TEMPORARY FILTER AREA IN ITS ENTIRETY. PLEASE NOTE THAT THIS TEMPORARY PULLBOX MAY BE USED TO PROVIDE TEMPORARY POWER FOR A NEW TEMPORARY FILTER SYSTEM, IF NECESSARY, PRIOR TO REMOVING THIS PULLBOX.

GENERAL NOTES:

1. NOT ALL DEMOLITION WORK IS SHOWN ON THIS DRAWING. REFER TO OTHER DEMOLITION FLOOR PLAN DRAWINGS FOR ADDITIONAL INFORMATION.

THIS CONFORMED DOCUMENT IS RELEASED FOR THE CONVENIENCE OF THE CONTRACTOR UNDER THE AUTHORITY OF:

K. A. Harutunian — 11-01-22
K. A. HARUTUNIAN, P.E. — DATE
TX LIC NO. 59181

SEE DISCLAIMER FOR LIMITATIONS OF USE.

CONTRACT DOCUMENTS DATED FEBRUARY 28, 2022, AS PART OF THE BIDDING DOCUMENTS (DRAWINGS AND SPECIFICATIONS) AND SUBSEQUENTLY ISSUED ADDENDA HAVE BEEN MERGED INTO ONE CONFORMING SET OF DOCUMENTS FOR THE CONVENIENCE OF THE CONTRACTOR. IF INCONSISTENCIES OR AMBIGUITIES BETWEEN "CONFORMED" DOCUMENTS AND CONTRACT DOCUMENTS ARE FOUND, THE CONTRACT DOCUMENTS SHALL GOVERN.

This document, and the designs incorporated herein, is an instrument of professional service that has been developed, designed and prepared by Harutunian Engineering, Inc., and is not to be used, in whole or in part, for any other project without giving written notice to Harutunian Engineering, Inc.

REV	DATE	BY	DESCRIPTION
			CONFORMED DOCUMENTS

DESIGNED HEI
DRAWN HEI
CHECKED HEI
DATE NOVEMBER 2022

**
ORIGINAL
SEALED BY
K.A. HARUTUNIAN
02-28-22
TX PE 59181
**

HARUTUNIAN ENGINEERING INCORPORATED
ENGINEERING AND ENVIRONMENTAL CONSULTANTS
8100 CROSS PARK DRIVE
AUSTIN, TEXAS 78754
TBPE REGISTRATION NO. F-2408

carollo
TBPELS No. F-882

CITY OF AUSTIN

CITY OF AUSTIN
WILD HORSE RANCH WWTP EXPANSION
DEMOLITION
OPERATIONS BUILDING
DUCT BANK PLAN - DEMOLITION

VERIFY SCALES
BAR IS ONE INCH ON ORIGINAL DRAWING
0 1"
IF NOT ONE INCH ON THIS SHEET, ADJUST SCALES ACCORDINGLY

JOB NO. 10976A.00
DRAWING NO. 80DE17
SHEET NO. 186 OF 464

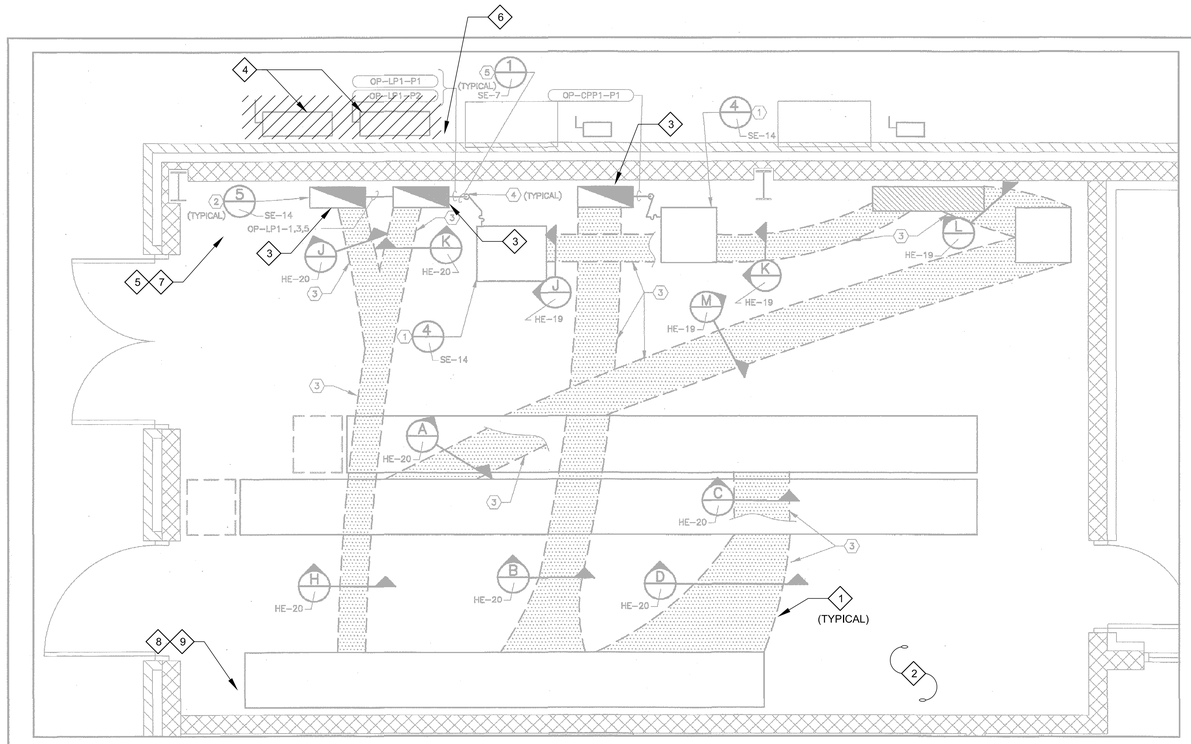

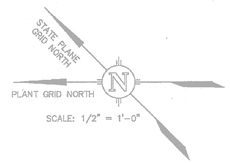

KEY NOTES:

1. FURNISH AND INSTALL REINFORCED CONCRETE EQUIPMENT PAD UNDERNEATH EQUIPMENT PER THE DETAILS ON DRAWING NO. SE-14.
2. SURFACE MOUNT "OP-LP-001", "OP-LP-002", AND "OP-CPP-001" TO WALL PER THE DETAILS ON DRAWING NO. SE-14.
3. PROPOSED CONDUIT/WIRE PENETRATES SLAB AND ROUTES UNDERNEATH SLAB. SPACE AND ENCASE IN SAND PER THE DETAILS ON DRAWING NO. SE-8.
4. LOCATE CONDUIT/WIRE STUB-UP IMMEDIATELY ADJACENT TO EQUIPMENT. PROPOSED CONDUIT/WIRE STUB-UP SHOWN SCHEMATICALLY AWAY FROM EQUIPMENT FOR CLARITY.
5. SURFACE MOUNT PROPOSED CONDUIT/WIRE PER THE DETAILS ON DRAWING NO. SE-7.

GENERAL NOTES:

1. NOT ALL ELECTRICAL/MECHANICAL/STRUCTURAL/CIVIL COMPONENTS ARE SHOWN ON THIS DRAWING. REFER TO ELECTRICAL/MECHANICAL/STRUCTURAL/CIVIL DRAWINGS, AS APPLICABLE, FOR ADDITIONAL INFORMATION.
2. EXACT LOCATIONS OF MECHANICAL/STRUCTURAL/CIVIL COMPONENTS ARE NOT SHOWN ON THIS DRAWING. REFER TO MECHANICAL/STRUCTURAL/CIVIL DRAWINGS FOR EXACT LOCATIONS OF MECHANICAL/STRUCTURAL/CIVIL ITEMS.
3. CONTRACTOR SHALL CLOSELY AND CAREFULLY COORDINATE ROUTE OF PROPOSED CONDUIT/WIRE WITH EXISTING AND PROPOSED CIVIL/MECHANICAL/STRUCTURAL/ELECTRICAL SYSTEMS/COMPONENTS/EQUIPMENT/UTILITIES, ETC.
4. EXTREME CARE MUST BE TAKEN FOR THE INSTALLATION OF THE ELECTRICAL DUCT BANKS SINCE THERE ARE NO AVAILABLE AS BUILT RECORDS OF PROFILES IDENTIFYING THE LOCATION AND INVERT ELEVATIONS OF EXISTING UNDERGROUND ELECTRICAL SYSTEM AND UNDERGROUND MECHANICAL PIPING. ROUTING OF NEW DUCT BANK SHOWN IS BASED ON SCHEMATIC KNOWLEDGE OF THE SIZE OF MECHANICAL PIPING AND THEIR APPROXIMATE SIZE AND/OR LOCATION. NO DATA IS AVAILABLE PERTAINING TO EXISTING UNDERGROUND ELECTRICAL DUCT BANK SYSTEM AND ITS COORDINATION WITH THE UNDERGROUND MECHANICAL SYSTEM. THEREFORE THE CONTRACTOR IS TO EXERCISE EXTREME CARE, VERIFY LOCATION/ROUTING/ELEVATION OF EXISTING UNDERGROUND UTILITIES PRIOR TO COMMENCING FULL SCALE INSTALLATION PROCESS OF THE PROPOSED DUCT BANK SYSTEM. FOLLOWING THE DISCOVERY VERIFICATION OF EXISTING UNDERGROUND UTILITIES, SHOULD ADJUSTMENT/MODIFICATIONS BECOME A NECESSITY TO EITHER THE EXISTING OR PROPOSED SYSTEM (AS APPLICABLE), THE EXISTING DISCOVERED FIELD CONDITIONS MUST BE BROUGHT TO THE ENGINEERS ATTENTION FOR EXECUTION OF THE NECESSARY ADJUSTMENTS/MODIFICATIONS.
5. SUPPORT/RACK EXPOSED CONDUIT SYSTEMS PER DETAILS ON DRAWING NO. SE-7.
6. DARK LINEWORK DENOTES PROPOSED EQUIPMENT. LIGHT LINEWORK DENOTES FUTURE EQUIPMENT.
7. CONTRACTOR SHALL SIZE ALL PULLBOXES PER, AND IN ACCORDANCE WITH, THE REQUIREMENTS OF THE NATIONAL ELECTRICAL CODE (N.E.C.).
8. LOCATIONS/SIZES OF ELECTRICAL EQUIPMENT SHOWN ARE APPROXIMATE. CONTRACTOR SHALL FIELD VERIFY ACTUAL CONDITIONS PRIOR TO COMMENCING CONSTRUCTION.

KEY NOTES

1. REFER TO DUCT BANK SECTION DEMOLITION SHEETS [80DE26] THROUGH [80DE29] FOR DEMOLITION DETAILS FOR THE EXISTING DUCT BANKS.
2. PRIOR TO COMMENCING RENOVATION ACTIVITIES, CONTRACTOR SHALL COORDINATE WITH OWNER TO HAVE THE OWNER REMOVE THE EXISTING LOCKERS AND FOLDING TABLE CURRENTLY OCCUPYING THE SPACE ALLOTTED FOR THE MAIN CONTROL PANEL EXTENSION AS SHOWN ON THE APPLICABLE RENOVATION DRAWINGS.
3. REFER TO APPLICABLE DEMOLITION PANEL SCHEDULES ON DRAWING NOS. [80DE10] - [80DE15] FOR ADDITIONAL INFORMATION.
4. DISCONNECT AND REMOVE EXISTING GENERATOR DISCONNECT SWITCHES AND ASSOCIATED CONDUIT/WIRE, MOUNTED HARDWARE, CONCRETE PAD, ETC. IN ITS ENTIRETY. REFER TO DEMOLITION ONE-LINE DIAGRAMS FOR ADDITIONAL INFORMATION.
5. DISCONNECT AND REMOVE EXISTING POWER DISTRIBUTION PANEL "UV-PANEL-PDP" AND EXISTING UV DEDICATED ATS SWITCH TAGGED "UV-ATS" IN THEIR ENTIRETY. REFER TO DETAILED DEMOLITION ONE-LINE DIAGRAM ON DRAWING NO. [80DE06] FOR ADDITIONAL INFORMATION.
6. THERE ARE THREE CONDUITS WHICH STUB UP IN THIS AREA WHICH ROUTE UNDERGROUND FROM THE GENERATOR. ONE IS DEDICATED FOR POWER FROM THE GENERATOR TO THE AUTOMATIC TRANSFER SWITCH "UV-ATS" LOCATED WITHIN THE ELECTRICAL ROOM OF THE OPERATIONS BUILDING. ONE CONDUIT IS AUXILIARY POWER ROUTING FROM PANEL "OP-LP-001" TO THE GENERATOR CONTROL PANEL AND SHALL REMAIN AND BE REUSED. THE OTHER CONDUIT IS A CONTROLS CONDUIT ROUTING TO THE "UV-ATS" AND SPLITTING OFF AND TERMINATING AT THE MAIN CONTROL PANEL "OP-MCP-001". FOR THE GENERATOR POWER CONDUIT/WIRE, DISCONNECT AND REMOVE THE POWER WIRING WITHIN THE EXISTING POWER CONDUIT IN ITS ENTIRETY AND CUT THE POWER CONDUIT AT THE LB LOCATED IN THE INTERIOR WALL OF THE ELECTRICAL ROOM AND REMOVE THE REMAINING EXPOSED CONDUIT ROUTING WITHIN THE ELECTRICAL ROOM. A PORTION OF THE EXISTING CONDUIT SHALL BE REUSED DURING RENOVATION ACTIVITIES. FOR THE GENERATOR CONTROL CONDUIT, DISCONNECT AND REMOVE THE CONTROL WIRING ROUTING TO THE ATS AND MAIN CONTROL PANEL IN ITS ENTIRETY. CUT THE CONTROLS CONDUIT AT THE LB LOCATED ON THE INTERIOR WALL OF THE ELECTRICAL ROOM AND REMOVE THE REMAINING EXPOSED CONTROL CONDUIT ROUTING WITHIN THE ELECTRICAL ROOM IN ITS ENTIRETY. A PORTION OF THE CONTROLS CONDUIT SHALL REMAIN AND BE REUSED DURING RENOVATION ACTIVITIES. REFER TO THE DEMOLITION ONE-LINE DIAGRAM ON DRAWING [80E06] FOR ADDITIONAL INFORMATION.
7. BASED ON FIELD OBSERVATIONS, IT APPEARS THAT THERE IS A FEEDER CIRCUIT BREAKER WITHIN THE UV PANEL THAT POWERS SOME OR ALL OF THE OPERATIONS BUILDING LIGHTING FIXTURES. THESE FIXTURES WERE REPLACED BY OTHERS AND NO RECORD DRAWINGS ARE AVAILABLE. IT IS UNKOWN WHICH LIGHT FIXTURES ARE POWERED FROM THIS CIRCUIT. DISCONNECT AND REMOVE THE FEEDER CONDUIT/WIRE IN ITS ENTIRETY. LIGHT FIXTURES SHALL REMAIN AND BE RE-FED FROM ANOTHER SOURCE DURING RENOVATION ACTIVITIES. CONTRACTOR SHALL FIELD VERIFY EXISTING CONDITIONS PRIOR TO COMMENCING DEMOLITION OR RENOVATION ACTIVITIES. REFER TO DEMOLITION ONE-LINE DIAGRAM ON DRAWING [80DE06].
8. BASED ON FIELD OBSERVATIONS, IT APPEARS THAT THERE IS AN EXISTING OMNI CONTROL PANEL MOUNTED ON THE SIDE OF THE MAIN CONTROL PANEL WHICH ACCEPTS DIGITAL INPUT AND ANALOG INPUT SIGNALS. IT APPEARS THAT THE OMNI CONTROL PANEL IS DESIGNED TO CONTACT THE OWNER VIA CELLULAR INFORMING THEM OF EXISTING EQUIPMENT MONITORING STATUS AND ALARMS. CONTRACTOR SHALL DISCONNECT ASSOCIATED INCOMING/OUTGOING WIRING IN ITS ENTIRETY. THE CONTROL PANEL AND ASSOCIATED CONDUITS ROUTING BETWEEN THE MAIN CONTROL PANEL AND THE OMNI CONTROL PANEL SHALL REMAIN AND BE REUSED DURING RENOVATION ACTIVITIES.
9. BASED ON FIELD OBSERVATIONS, THERE IS AN EXISTING CHART RECORDER MOUNTED ON THE SIDE OF THE MAIN CONTROL PANEL. DISCONNECT AND REMOVE EXISTING CHART RECORDER AND ASSOCIATED CONDUIT/WIRE IN ITS ENTIRETY.

THIS CONFORMED DOCUMENT IS RELEASED FOR THE CONVENIENCE OF THE CONTRACTOR UNDER THE AUTHORITY OF:

K. A. HARUTUNIAN, P.E. — 11-01-22 DATE
TX LIC NO. 59181

SEE DISCLAIMER FOR LIMITATIONS OF USE.

CONTRACT DOCUMENTS DATED FEBRUARY 28, 2022, AS PART OF THE BIDDING DOCUMENTS (DRAWINGS AND SPECIFICATIONS) AND SUBSEQUENTLY ISSUED ADDENDA HAVE BEEN MERGED INTO ONE CONFORMING SET OF DOCUMENTS FOR THE CONVENIENCE OF THE CONTRACTOR. IF INCONSISTENCIES OR AMBIGUITIES BETWEEN "CONFORMED" DOCUMENTS AND CONTRACT DOCUMENTS ARE FOUND, THE CONTRACT DOCUMENTS SHALL GOVERN.

RECORD DRAWING
THIS CONSTRUCTION DOCUMENT WAS PREPARED USING INFORMATION SUPPLIED BY THE CONTRACTOR TO REPRESENT CONSTRUCTION CHANGES. THIS DOCUMENT IS FOR INFORMATION AND REFERENCE IN CONNECTION WITH THE OWNER'S USE AND OCCUPANCY OF THE PROJECT AND IS NOT INTENDED FOR BID, PERMIT OR CONSTRUCTION.
BY: K.A. Harutunian DATE: 1/6/2007

REUSE OF DOCUMENTS
This document and the ideas and designs incorporated herein as an instrument of professional service has been developed, designed and prepared by Harutunian Engineering, Inc. and is not to be used, in whole or part, for any other project without the written authorization of the City of Austin and Harutunian Engineering, Inc. © 2003

HARUTUNIAN ENGINEERING INCORPORATED — ENGINEERING AND ENVIRONMENTAL CONSULTANTS, 305 EAST HUNTLAND DRIVE, SUITE 300, AUSTIN, TEXAS 78752

NO.	DATE	REVISION	APPROV.
4			
3			
2			
1			

REFERENCE DRAWINGS:
HE-11 – EQUIPMENT LOCATION
RE-33 – RE-34 – CONDUIT/WIRE SCHEDULE
QE-1 – FIELD CONTROL STATION FRONT ELEVATIONS

WARNING
0 1/2 1
IF THIS BAR DOES NOT MEASURE 1" THEN DRAWING IS NOT TO SCALE

K. A. HARUTUNIAN 59181 REGISTERED PROFESSIONAL ENGINEER STATE OF TEXAS
10/18/2003

Dwg. No. HE-13

CITY OF AUSTIN, TEXAS
NORTHEAST INTERIM WASTEWATER TREATMENT PLANT
OPERATIONS BUILDING
ELECTRICAL ROOM INTERCONNECT PLAN
Turner Collie & Braden Inc.
ENGINEERS • PLANNERS • PROJECT MANAGERS

Unit PUBLIC WORKS	Scale 1/2"=1'-0"	Date OCTOBER 2003	
Designed HEI	Checked HEI	Job No. 052-122094-0008	
Drawn HEI	Approved HEI	Sheet 196/327	

This document, and the designs incorporated herein, is an instrument of professional service that has been developed, designed and prepared by Harutunian Engineering, Inc., and is not to be used, in whole or in part, for any other project without giving written notice to Harutunian Engineering, Inc.

REV	DATE	BY	DESCRIPTION
			CONFORMED DOCUMENTS

DESIGNED HEI
DRAWN HEI
CHECKED HEI
DATE NOVEMBER 2022

** ORIGINAL SEALED BY K.A. HARUTUNIAN 02-28-22 TX PE 59181 **

HARUTUNIAN ENGINEERING INCORPORATED
ENGINEERING AND ENVIRONMENTAL CONSULTANTS
8100 CROSS PARK DRIVE, AUSTIN, TEXAS 78754 — TBPE REGISTRATION NO. F-2408

carollo® TBPELS No. F-882

CITY OF AUSTIN — FOUNDED 1839

CITY OF AUSTIN

CITY OF AUSTIN
WILD HORSE RANCH WWTP EXPANSION
DEMOLITION
OPERATIONS BUILDING ELECTRICAL ROOM DUCT BANK PLAN - DEMOLITION

VERIFY SCALES
BAR IS ONE INCH ON ORIGINAL DRAWING
0 1"
IF NOT ONE INCH ON THIS SHEET, ADJUST SCALES ACCORDINGLY

JOB NO. 10976A.00
DRAWING NO. 80DE18
SHEET NO. 187 OF 464

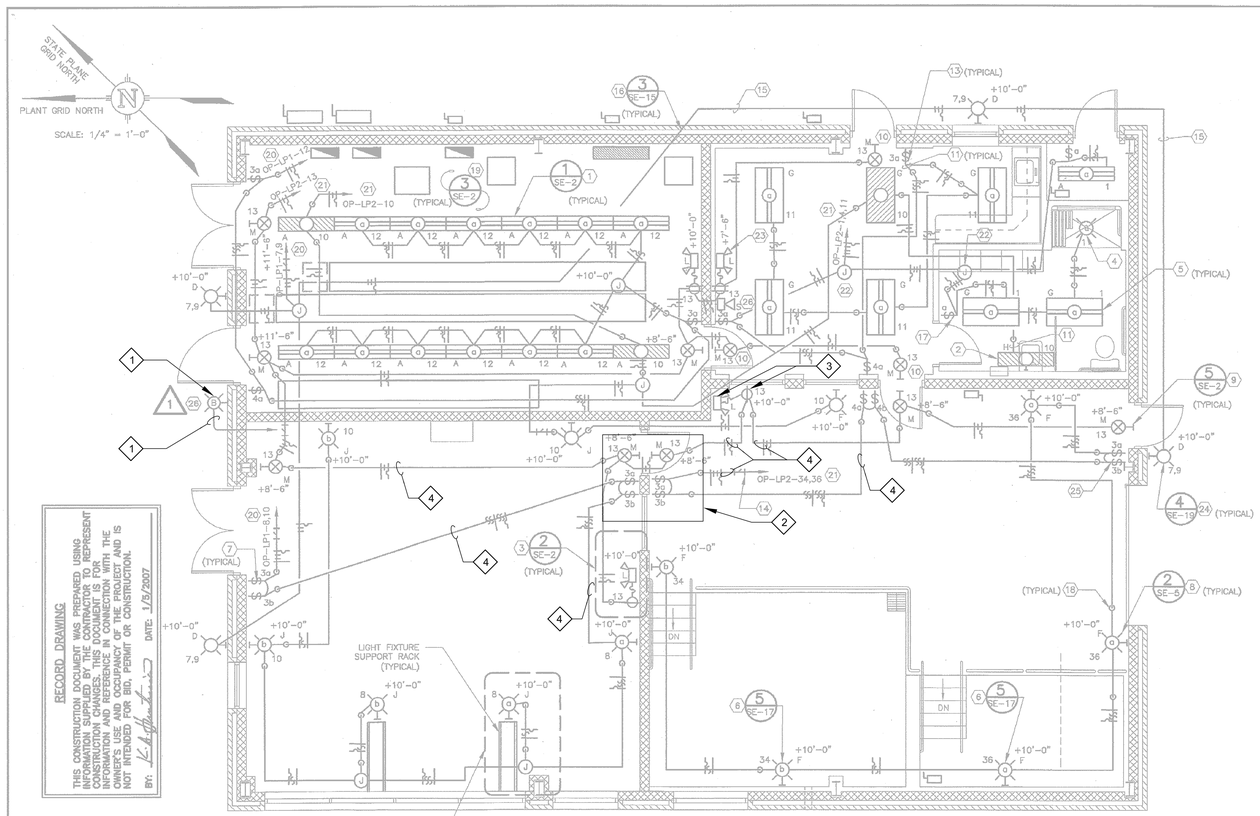

RECORD DRAWING

THIS CONSTRUCTION DOCUMENT WAS PREPARED USING INFORMATION SUPPLIED BY THE CONTRACTOR TO REPRESENT CONSTRUCTION CHANGES MADE IN THE FIELD. THIS DOCUMENT IS FOR INFORMATION AND REFERENCE IN CONNECTION WITH THE OWNER'S USE AND OCCUPANCY OF THE PROJECT AND IS NOT INTENDED FOR BID, PERMIT OR CONSTRUCTION.

By: K.A. Harutunian DATE: 1/5/2007

GENERAL NOTES:

1. NOT ALL ELECTRICAL/MECHANICAL/STRUCTURAL/CIVIL COMPONENTS ARE SHOWN ON THIS DRAWING. REFER TO ELECTRICAL/MECHANICAL/STRUCTURAL/CIVIL DRAWINGS, AS APPLICABLE, FOR ADDITIONAL INFORMATION.
2. DARK LINEWORK DENOTES PROPOSED EQUIPMENT. LIGHT LINEWORK DENOTES FUTURE EQUIPMENT.
3. LOCATIONS/SIZES OF ELECTRICAL EQUIPMENT SHOWN ARE APPROXIMATE. CONTRACTOR SHALL FIELD VERIFY ACTUAL CONDITIONS PRIOR TO COMMENCING CONSTRUCTION.
4. EXACT LOCATIONS OF MECHANICAL/STRUCTURAL/CIVIL COMPONENTS ARE NOT SHOWN ON THIS DRAWING. REFER TO MECHANICAL/STRUCTURAL/CIVIL DRAWINGS FOR EXACT LOCATIONS OF MECHANICAL/STRUCTURAL/CIVIL ITEMS.
5. CONTRACTOR SHALL SIZE ALL PULLBOXES PER, AND IN ACCORDANCE WITH, THE REQUIREMENTS OF THE NATIONAL ELECTRICAL CODE (N.E.C.).
6. CONTRACTOR SHALL CLOSELY AND CAREFULLY COORDINATE ROUTE OF PROPOSED CONDUIT/WIRE WITH EXISTING AND PROPOSED CIVIL/MECHANICAL/STRUCTURAL/ELECTRICAL SYSTEMS/COMPONENTS/EQUIPMENT/UTILITIES, ETC.
7. PROPOSED CONDUIT/WIRE SHOWN SCHEMATICALLY HERE FOR CLARITY.
8. SUPPORT/RACK EXPOSED CONDUIT/WIRE SYSTEMS PER THE DETAILS ON DRAWING NO. SE-7.

GENERAL NOTES (CONTINUED):

8. ALL LIGHTING FIXTURE AND CONDUIT/WIRE SUPPORT/RACKING ATTACHMENT TO METAL CEILING/WALL STRUCTURE SHALL BE AS RECOMMENDED BY THE BUILDING MANUFACTURER. CLOSELY AND CAREFULLY COORDINATE CONDUIT/WIRE SUPPORT/RACKING AND LIGHTING FIXTURE ATTACHMENT TO METAL STRUCTURE WITH THE BUILDING MANUFACTURER. FURNISH AND INSTALL ALL NECESSARY HARDWARE/FITTINGS/BOLT/NUTS/ETC., PER THE RECOMMENDATIONS OF THE BUILDING MANUFACTURER TO ATTACH ALL METAL CEILING/WALL SURFACE MOUNTED LIGHTING FIXTURES AND ALL METAL CEILING/WALL SURFACE MOUNTED CONDUIT/WIRE AND MAKE ALL FINAL CONNECTIONS TO THE SATISFACTION OF THE ENGINEER AND THE OWNER AT NO ADDITIONAL COST TO THE OWNER. FURNISH AND INSTALL ADDITIONAL STRUCTURAL BUILDING MEMBERS AS NECESSARY TO SUPPORT PROPOSED LIGHT FIXTURE/CONDUIT/WIRE AT NO ADDITIONAL COST TO THE OWNER.

REFERENCE DRAWINGS:

HE-11 – EQUIPMENT LOCATION

RE-33 – RE-34 – CONDUIT/WIRE SCHEDULE

RE-35 – RE-38 – PANEL SCHEDULES

SE-1 – LIGHTING FIXTURE SCHEDULE

KEY NOTES (CONTINUED):

17. LIGHT SWITCH IS GANG MOUNTED WITH PROPOSED EXHAUST FAN "OP-EF-001" MANUAL MOTOR STARTER (NOT SHOWN). CLOSELY AND CAREFULLY COORDINATE MOUNTING AND MAKE ALL FINAL CONNECTIONS. COMBINE EXHAUST FAN MOTOR STARTER INTERCONNECT CIRCUITING TO "OP-LP-002" WITH LIGHT FIXTURE CIRCUITING. ALSO REFER TO DRAWING NO. HE-15 , KEYNOTE SIX, FOR ADDITIONAL INFORMATION.

KEY NOTES:

1. FURNISH AND INSTALL LIGHT FIXTURE SUSPENDED UNDERNEATH STRUCTURAL CEILING AT 10'-0" ABOVE FINISHED FLOOR PER THE DETAILS ON DRAWING NO. SE-2. TYPICAL FOR ALL TYPE "A" LIGHT FIXTURES.
2. FURNISH AND INSTALL LIGHT FIXTURE AT 7'-6" ABOVE FINISHED FLOOR SURFACED MOUNTED TO WALL AND IMMEDIATELY ABOVE MIRROR. CLOSELY AND CAREFULLY COORDINATE LOCATION/FINISH WITH ARCHITECTURAL TO MATCH WALL.
3. FURNISH AND INSTALL LIGHT FIXTURE WITH DEDICATED RECEPTACLE SURFACE MOUNTED TO WALL PER THE DETAILS ON DRAWING NO. SE-2. THE RECEPTACLE TYPE VARIES BY ROOM. ALSO REFER TO THE SPECIFICATIONS. FURNISH AND INSTALL SIMPLEX CORD AND PLUG ASSEMBLIES FOR FIXTURES LOCATED IN THE BLOWER ROOM, ROOM #006, AND THE STORAGE ROOM, ROOM #004, PER THE SPECIFICATIONS.
4. PROPOSED LIGHT FIXTURE IS RECESSED IN SHOWER CEILING AND IS FURNISHED BY MECHANICAL. CLOSELY AND CAREFULLY COORDINATE WITH MECHANICAL, COMPLETE THE INSTALLATION, AND MAKE ALL FINAL CONNECTIONS PER THE MANUFACTURER'S RECOMMENDATIONS.
5. FURNISH AND INSTALL LIGHT FIXTURE FLUSH MOUNTED WITH SUSPENDED CEILING AT 9'-0" ABOVE FINISHED GRADE. CLOSELY AND CAREFULLY COORDINATE LIGHT FIXTURE FINISH AND TRIM SUB-COMPONENTS WITH ARCHITECTURAL TO MATCH CEILING AND MAKE ALL FINAL CONNECTIONS. SUSPEND/MOUNT FIXTURE FROM STRUCTURAL CEILING SIMILAR TO THE DETAILS DRAWING NO. SE-2. TYPICAL FOR ALL TYPE "G" LIGHT FIXTURES.
6. PROPOSED WALL SURFACE TYPE VARIES ALONG HEIGHT OF BUILDING. FURNISH AND INSTALL ADDITIONAL STRUCTURAL MEMBERS AS NECESSARY TO FACILITATE LIGHT FIXTURE MOUNTING AND MAKE ALL FINAL CONNECTIONS. FURNISH AND INSTALL LIGHT FIXTURE TO BUILDING STRUCTURE PER THE DETAILS ON DRAWING NO. SE-17. CLOSELY AND CAREFULLY COORDINATE LIGHT FIXTURE SUPPORTS WITH THE BUILDING MANUFACTURER. FURNISH AND INSTALL DEDICATED LIGHT FIXTURE JUNCTION BOX WITH EACH LIGHT FIXTURE. PROPOSED JUNCTION BOX NOT SHOWN HERE FOR CLARITY.
7. SURFACE MOUNT LIGHT SWITCH TO WALL PER THE DETAILS ON DRAWING NO. SE-14. TYPICAL FOR LIGHT SWITCHES LOCATED INSIDE THE ELECTRICAL ROOM, ROOM #005, BLOWER ROOM, ROOM #006, STORAGE ROOM, ROOM #004, AND MECH., ROOM #007. FURNISH AND INSTALL LIGHT SWITCH WITH MULTI-GANG DEVICE ENCLOSURE, AS REQUIRED, TO FACILITATE WIRING TERMINATION. ALSO REFER TO SPECIFICATIONS.
8. SURFACE MOUNT LIGHT FIXTURE TYPES "F" AND "J" TO WALL PER THE DETAILS ON DRAWING NO. SE-5. FURNISH AND INSTALL DEDICATED LIGHT FIXTURE JUNCTION BOX WITH EACH LIGHT FIXTURE. PROPOSED JUNCTION BOX NOT SHOWN HERE FOR CLARITY.
9. SURFACE MOUNT TYPE "M" LIGHT FIXTURE TO WALL PER THE DETAILS ON DRAWING NO. SE-2. FURNISH AND INSTALL DEDICATED LIGHT FIXTURE JUNCTION BOX WITH EACH LIGHT FIXTURE. PROPOSED JUNCTION BOX NOT SHOWN HERE FOR CLARITY. TYPICAL FOR TYPE "M" LIGHT FIXTURES LOCATED INSIDE THE ELECTRICAL ROOM, ROOM #005, BLOWER ROOM, ROOM #006, AND STORAGE ROOM, ROOM #004.
10. FURNISH AND INSTALL TYPE "M" LIGHT FIXTURE AT +8'-6" (IMMEDIATELY ABOVE DOOR FRAME) SURFACE MOUNTED TO WALL/DEVICE ENCLOSURE SIMILAR TO THE DETAILS ON DRAWING NO. SE-19 AND MAKE ALL FINAL CONNECTIONS. CLOSELY AND CAREFULLY COORDINATE CONNECTION BETWEEN DEVICE ENCLOSURE AND LIGHT FIXTURE ENCLOSURE. TYPICAL FOR TYPE "M" LIGHT FIXTURES LOCATED INSIDE THE FINISHED ROOMS OFFICE, ROOM #001.
11. PROPOSED CONDUIT/WIRE TURNS UP/DOWN AND ROUTES INSIDE OF WALL FURR-OUT TO CONNECT TO PROPOSED EQUIPMENT. TYPICAL FOR DEVICES LOCATED INSIDE THE FINISHED ROOMS OFFICE, ROOM #001, AND TOILET, ROOM #003.
12. FURNISH AND INSTALL LIGHT FIXTURE SUPPORT RACK AND DEDICATED LIGHT FIXTURE JUNCTION BOX PER THE DETAILS ON DRAWING NO. SE-18 AND MAKE ALL FINAL CONNECTIONS. CLOSELY AND CAREFULLY COORDINATE WITH MECHANICAL.
13. RECESS PROPOSED LIGHT SWITCH INTO WALL FURR-OUT AND MAKE ALL FINAL CONNECTIONS PER THE DETAILS ON DRAWING NO. SE-18. CLOSELY AND CAREFULLY COORDINATE FINISH WITH ARCHITECTURAL. TYPICAL FOR LIGHT SWITCHES LOCATED INSIDE THE FINISHED ROOMS OFFICE, ROOM #001, AND TOILET, ROOM #003.
14. LOCATE SEALING FITTING IMMEDIATELY ADJACENT TO WALL OF ELECTRICAL ROOM/OFFICE. SEALING FITTING SHOWN HERE AWAY FROM WALL FOR PURPOSES OF CLARITY ONLY.
15. PROPOSED CONDUIT/WIRE ROUTES INSIDE OF PROPOSED OPERATIONS BUILDING AND PENETRATES WALL TO CONNECT TO REAR OF PROPOSED LIGHT FIXTURE. PROPOSED CONDUIT/WIRE IS SHOWN ROUTED EXTERIOR TO THE OPERATIONS BUILDING AND CONNECTING TO EXTERIOR SIDE OF FIXTURE FOR PURPOSES OF CLARITY.
16. PERFORM CONDUIT/WIRE PENETRATION PER THE DETAILS ON DRAWING NO. SE-15. IN ADDITION, SEAL METAL WALL PENETRATIONS (AS APPLICABLE) PER ARCHITECTURAL DRAWINGS/SPECIFICATIONS AND MAKE ALL FINAL CONNECTIONS. TYPICAL FOR ALL WALL PENETRATIONS.

KEY NOTES (CONTINUED):

18. LOCATE CONDUIT/WIRE TURN UP/DOWN IMMEDIATELY ADJACENT TO PROPOSED EQUIPMENT. TURN UP/DOWN LOCATION SHOWN AWAY FROM EQUIPMENT FOR PURPOSES OF CLARITY.
19. CLOSELY AND CAREFULLY COORDINATE ELEVATION/ROUTE OF CONDUIT/WIRE WITH ELECTRICAL ROOM CONDUIT SYSTEMS LAYERING CONCEPT DETAIL SHOWN ON DRAWING NO. SE-2. CLOSELY AND CAREFULLY COORDINATE WITH MECHANICAL/STRUCTURAL/ARCHITECTURAL/ETC.
20. PROPOSED CONDUIT/WIRE ROUTES TO CONNECT TO PANEL "OP-LP-001".
21. PROPOSED CONDUIT/WIRE ROUTES TO CONNECT TO PANEL "OP-LP-002".
22. FURNISH AND INSTALL PROPOSED JUNCTION BOX AT AN ELEVATION ABOVE SUSPENDED CEILING AND MAKE ALL FINAL CONNECTIONS.
23. FURNISH AND INSTALL PER THE DETAILS ON DRAWING NO. SE-5 AND MAKE ALL FINAL CONNECTIONS.
24. FURNISH AND INSTALL TYPE "D" LIGHT FIXTURE, EACH WITH TWO DEDICATED JUNCTION BOXES (BOTH JUNCTION BOXES ARE NOT SHOWN) PER THE DETAILS ON DRAWING NO. SE-19 AND MAKE ALL FINAL CONNECTIONS. TYPICAL FOR ALL TYPE "D" LIGHT FIXTURES.
25. GANG MOUNT LIGHT SWITCHES TO COLUMN SIMILAR TO DETAILS ON DRAWING NO. SE-17. USE MIMINUM OF TWO BEAM CLAMPS, ONE ON EACH SIDE OF COLUMN. ALSO FOLLOW THE RECOMMENDATIONS OF THE BUILDING MANUFACTURER.
26. PROPOSED FLASHING BEACON AND PROPOSED HORN TO INTERCONNECT TO CONTROL PANEL "OP-MCP-001".

KEY NOTES

1. ALARM BEACON AND HORN TO BE REUSED DURING RENOVATION ACTIVITIES. THE EXISTING CONDUIT AND WIRE ROUTING OVERHEAD BETWEEN THE BEACON/HORN AND THE MAIN CONTROL PANEL SHALL BE REUSED. IF THE EXISTING WIRING IS OF INSUFFICIENT LENGTH TO CONNECT TO PROPOSED TERMINAL BLOCKS WITHIN THE MAIN CONTROL PANEL, CONTRACTOR SHALL FURNISH AND INSTALL NEW CONTROL WIRING, SAME QUANTITY AND SIZE AS EXISTING, WITHIN THE EXISTING CONDUIT(S) AND MAKE ALL FINAL TERMINATIONS.
2. CONTRACTOR SHALL BE AWARE THAT THE EXISTING SINGLE DOOR, ADJACENT WINDOW AND A PORTION OF THE WALL BETWEEN THE BLOWER ROOM AND CHEMICAL ROOM WILL BE REMOVED DURING DEMOLITION ACTIVITIES. A DOUBLE DOOR WILL BE INSTALLED IN THE SAME LOCATION DURING RENOVATION ACTIVITIES. THE EXISTING LIGHT SWITCHES, RECEPTACLES, LIGHTING FIXTURES, ETC., SHALL BE DISCONNECTED AND REMOVED FROM ITS CURRENT LOCATION. THIS EQUIPMENT SHALL BE REUSED AND RELOCATED DURING RENOVATION ACTIVITIES. FIELD VERIFY EXISTING CONDITIONS AND COORDINATE WITH STRUCTURAL AND ARCHITECTURAL PRIOR TO COMMENCING DEMOLITION OR RENOVATION ACTIVITIES. PLEASE REFER TO STRUCTURAL DRAWINGS FOR ADDITIONAL INFORMATION.
3. BASED ON FIELD OBSERVATIONS, THIS EMERGENCY LIGHT FIXTURE AND ASSOCIATED RECEPTACLE WAS LOCATED ON THE PORTION OF THE WALL TO BE DEMOLISHED FOR INSTALLATION OF THE PROPOSED DOUBLE DOOR. IF SO, THIS LIGHTING FIXTURE, RECEPTACLE AND ASSOCIATED CONDUIT AND WIRE WILL NEED TO BE DISCONNECTED AND REMOVED FROM ITS CURRENT LOCATION. THE EXISTING LIGHT FIXTURE AND RECEPTACLE WILL NEED TO BE RELOCATED FOR USE DURING RENOVATION ACTIVITIES. REFER TO KEYNOTE 2 ON THIS DRAWING FOR ADDITIONAL REQUIREMENTS AND INFORMATION.
4. CONTRACTOR SHALL DISCONNECT AND REMOVE EXISTING CONDUIT AND WIRE ROUTING TO/FROM THE EQUIPMENT (I.E. LIGHT FIXTURES, RECEPTACLES, SWITCHES, ETC.) TO BE REUSED AND RELOCATED. PENDING FIELD INVESTIGATIONS, CONTRACTOR MAY REUSE EXISTING CONDUIT AND WIRE WITHOUT ADDING ANY ADDITIONAL SPLICES TO THE WIRING FROM SOURCE TO DESTINATION.

REUSE OF DOCUMENTS
This document and the ideas and designs incorporated herein as an instrument of professional service has been developed, designed and prepared by Harutunian Engineering, Inc. and is not to be used, in whole or part, for any other project without the written authorization of the City of Austin and Harutunian Engineering, Inc. © 2003

HARUTUNIAN ENGINEERING INCORPORATED
ENGINEERING AND ENVIRONMENTAL CONSULTANTS
305 EAST HUNTLAND DRIVE SUITE 500 AUSTIN, TEXAS 78752

NO.	DATE	REVISION	APPROV.
4			
3			
2			
1	1/5/7	RECORD DRAWING	K.A.H.

THE SEAL APPEARING ON THIS DOCUMENT WAS AUTHORIZED BY K. A. HARUTUNIAN, P.E. 59181 ON OCTOBER 16, 2003

WARNING
0 1/2 1
IF THIS BAR DOES NOT MEASURE 1" THEN DRAWING IS NOT TO SCALE

STATE OF TEXAS K. A. HARUTUNIAN 59181 REGISTERED PROFESSIONAL ENGINEER

Dwg. No. HE-14

CITY OF AUSTIN, TEXAS
NORTHEAST INTERIM WASTEWATER TREATMENT PLANT

OPERATIONS BUILDING
LIGHTING PLAN

Turner Collie & Braden Inc.
ENGINEERS • PLANNERS • PROJECT MANAGERS

Unit PUBLIC WORKS	Scale 1/4"=1'-0"	Date OCTOBER 2003	
Designed HEI	Checked HEI	Job No. 052-122094-0008	
Drawn HEI	Approved HEI	Sheet 187/327	

THIS CONFORMED DOCUMENT IS RELEASED FOR THE CONVENIENCE OF THE CONTRACTOR UNDER THE AUTHORITY OF:

K. A. Harutunian — 11-01-22

K. A. HARUTUNIAN, P.E. — DATE
TX LIC NO. 59181

SEE DISCLAIMER FOR LIMITATIONS OF USE.

CONTRACT DOCUMENTS DATED FEBRUARY 28, 2022, AS PART OF THE BIDDING DOCUMENTS (DRAWINGS AND SPECIFICATIONS) AND SUBSEQUENTLY ISSUED ADDENDA HAVE BEEN MERGED INTO ONE CONFORMING SET OF DOCUMENTS FOR THE CONVENIENCE OF THE CONTRACTOR. IF INCONSISTENCIES OR AMBIGUITIES BETWEEN "CONFORMED" DOCUMENTS AND CONTRACT DOCUMENTS ARE FOUND, THE CONTRACT DOCUMENTS SHALL GOVERN.

This document, and the designs incorporated herein, is an instrument of professional service that has been developed, designed and prepared by Harutunian Engineering, Inc., and is not to be used, in whole or in part, for any other project without giving written notice to Harutunian Engineering, Inc.

REV	DATE	BY	DESCRIPTION
			CONFORMED DOCUMENTS

DESIGNED HEI
DRAWN HEI
CHECKED HEI
DATE NOVEMBER 2022

** ORIGINAL SEALED BY K.A. HARUTUNIAN 02-28-22 TX PE 59181 **

HARUTUNIAN ENGINEERING INCORPORATED
ENGINEERING AND ENVIRONMENTAL CONSULTANTS
8100 CROSS PARK DRIVE AUSTIN, TEXAS 78754
TBPE REGISTRATION NO. F-2408

carollo
TBPELS No. F-882

CITY OF AUSTIN FOUNDED 1839
CITY OF AUSTIN

CITY OF AUSTIN
WILD HORSE RANCH WWTP EXPANSION
DEMOLITION
OPERATIONS BUILDING
LIGHTING PLAN - DEMOLITION

VERIFY SCALES
BAR IS ONE INCH ON ORIGINAL DRAWING
0 1"
IF NOT ONE INCH ON THIS SHEET, ADJUST SCALES ACCORDINGLY

JOB NO. 10976A.00
DRAWING NO. 80DE19
SHEET NO. 188 OF 464

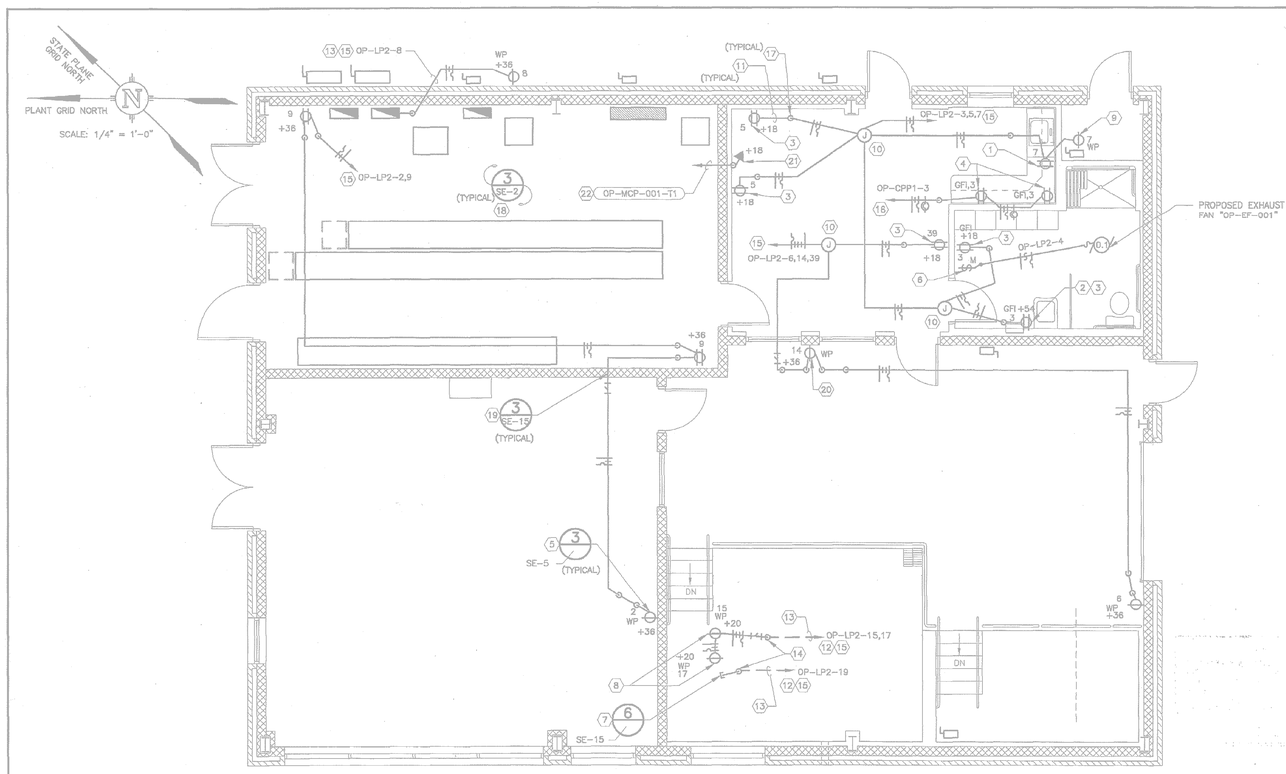

KEY NOTES:

1. FURNISH AND INSTALL RECEPTACLE UNDERNEATH COUNTER TOP BEHIND REFRIGERATOR. CLOSELY AND CAREFULLY COORDINATE WITH ARCHITECTURAL AND MAKE ALL FINAL CONNECTIONS.
2. MOUNT IMMEDIATELY ADJACENT TO MIRROR AND PAPER TOWEL DISPENSER.
3. FURNISH AND INSTALL CONVENIENCE RECEPTACLE RECESSED INTO FINISHED WALL PER THE DETAILS ON DRAWING NO. SE-19. CLOSELY AND CAREFULLY COORDINATE TRIM FINISH WITH ARCHITECTURAL AND SPECIFICATIONS AND MAKE ALL FINAL CONNECTIONS.
4. FURNISH AND INSTALL CONVENIENCE RECEPTACLE RECESSED INTO FINISHED CABINET CURB IMMEDIATELY ABOVE COUNTER TOP SIMILAR TO THE DETAILS ON DRAWING NO. SE-19. CLOSELY AND CAREFULLY COORDINATE TRIM FINISH WITH ARCHITECTURAL AND SPECIFICATIONS AND MAKE ALL FINAL CONNECTIONS.
5. SURFACE MOUNT CONVENIENCE RECEPTACLE TO WALL PER THE DETAILS ON DRAWING NO. SE-5.
6. FURNISH AND INSTALL MANUAL MOTOR STARTER INSIDE A DEVICE OUTLET BOX RECESSED INTO WALL ADJACENT TO PROPOSED LIGHT SWITCH PER THE DETAILS ON DRAWING NO. SE-19. MAKE ALL FINAL CONNECTIONS TO THE MANUAL MOTOR STARTER PER THE MANUAL MOTOR STARTER MANUFACTURER'S WIRING DIAGRAMS. THE PROPOSED MANUAL MOTOR STARTER SHALL HAVE THERMAL OVERLOADS AND A RED "ON" INDICATING PILOT LIGHT AND SHALL BE AS MANUFACTURED BY "CUTLER-HAMMER", TYPE A302, OR APPROVED EQUAL. CLOSELY AND CAREFULLY COORDINATE TRIM/FINISH WITH ARCHITECTURAL. THE CONTRACTOR SHALL SIZE THE THERMAL OVERLOADS PER THE REQUIREMENTS OF THE NATIONAL ELECTRIC CODE (N.E.C.). CLOSELY AND CAREFULLY COORDINATE REQUIREMENTS WITH HVAC/MECHANICAL. THE MANUAL MOTOR STARTER IS GANG MOUNTED WITH ADJACENT LIGHT FIXTURE SWITCH (NOT SHOWN) AND CORRESPONDING INTERCONNECT CIRCUITING (HOME-RUN) TO LIGHTING PANEL "OP-LP-002" IS COMBINED WITH THE LIGHT SWITCH INTERCONNECT CIRCUITING. ALSO REFER TO DRAWING NO. HE-14, KEYNOTE 17 FOR ADDITIONAL INFORMATION.
7. STUB-UP AND CAP-OFF CONDUIT FOR FUTURE CONNECTION TO FUTURE CHEMICAL FEED PUMP "OP-CHFP-003". LOCATE PROPOSED STUB-UP IN COMMENSURATE LOCATION WITH THAT OF PROPOSED CONDUIT/WIRE STUB-UP FOR CHEMICAL FEED PUMP "OP-CHFP-002" TO FACILITATE THE FUTURE CHEMICAL FEED PUMP INSTALLATION. PERFORM CAP-OFF PER THE DETAILS ON DRAWING NO. SE-15.
8. PROPOSED RECEPTACLES ARE DEDICATED FOR PROPOSED CHEMICAL FEED PUMPS "OP-CHFP-001" AND "OP-CHFP-002". CLOSELY AND CAREFULLY COORDINATE LOCATION WITH MECHANICAL. MOUNT ON VERTICAL SUPPORT CHANNELS SIMILIAR TO THE DETAILS ON DRAWING NO. SE-14 AND MAKE ALL FINAL CONNECTIONS. CLOSELY AND CAREFULLY COORDINATE WITH CHEMICAL FEED PUMP DEDICATED CONDUIT/WIRE IN VICINITY. ALSO REFER TO HE-23 , KEYNOTE TWO FOR ADDITIONAL INFORMATION. FURNISH AND INSTALL TWO SIMPLEX CORD AND PLUG ASSEMBLIES DEDICATED TO THE CHEMICAL FEED PUMPS. REFER TO THE SPECIFICATIONS.
9. FURNISH AND INSTALL RECEPTACLE UNDERNEATH DISCONNECT SWITCH "OP-DS-WH1" ON DISCONNECT SWITCH SUPPORT RACK AND MAKE ALL FINAL CONNECTIONS. RECEPTACLE SHOWN AWAY FROM DISCONNECT SWITCH FOR PURPOSES OF CLARITY.
10. FURNISH AND INSTALL PROPOSED JUNCTION BOX AT AN ELEVATION ABOVE SUSPENDED CEILING AND MAKE ALL FINAL CONNECTIONS.
11. PROPOSED CONDUIT/WIRE TURNS UP/DOWN AND ROUTES INSIDE OF WALL FURR-OUT TO CONNECT TO PROPOSED EQUIPMENT. TYPICAL FOR DEVICES LOCATED INSIDE THE FINISHED ROOMS OFFICE, ROOM #001, AND TOILET, ROOM #003.
12. PROPOSED CONDUIT/WIRE PENETRATES STRUCTURAL SLAB AND ROUTES UNDERNEATH SLAB IN DUCT BANK WITH OTHER CONDUIT/WIRE DEDICATED FOR CHEMICAL FEED PUMPS "OP-CHFP-001", "OP-CHFP-002", AND "OP-CHFP-003". REFER TO ENLARGED AREA PLAN ON DRAWING NO. HE-23 FOR DUCT BANK ROUTE IN VICINITY OF PROPOSED CHEMICAL FEED PUMPS AND ADDITIONAL EQUIPMENT IN VICINITY THAT IS NOT SHOWN HERE.
13. SPACE AND ENCASE IN SAND PER THE DETAILS ON DRAWING NO. SE-8.
14. LOCATE CONDUIT/WIRE STUB-UP IMMEDIATELY ADJACENT TO EQUIPMENT. PROPOSED CONDUIT/WIRE STUB-UP SHOWN SCHEMATICALLY AWAY FROM EQUIPMENT FOR CLARITY. PERFORM STUB-UP PER THE DETAILS ON DRAWING NO. SE-14.
15. PROPOSED CONDUIT/WIRE ROUTES TO CONNECT TO PROPOSED "OP-LP-002".
16. PROPOSED CONDUIT/WIRE ROUTES TO CONNECT TO PROPOSED "OP-CPP-001".
17. LOCATE CONDUIT/WIRE TURN UP/DOWN IMMEDIATELY ADJACENT TO PROPOSED EQUIPMENT. TURN UP/DOWN LOCATION SHOWN AWAY FROM EQUIPMENT FOR PURPOSES OF CLARITY.
18. CLOSELY AND CAREFULLY COORDINATE ELEVATION/ROUTE OF CONDUIT/WIRE WITH ELECTRICAL ROOM CONDUIT SYSTEMS LAYERING CONCEPT DETAIL SHOWN ON DRAWING NO. SE-2. CLOSELY AND CAREFULLY COORDINATE WITH MECHANICAL/STRUCTURAL/ARCHITECTURAL/ETC.

GENERAL NOTES:

1. SOME PROPOSED CONDUIT/WIRE ROUTES SURFACE MOUNTED INSIDE THE OPERATIONS BUILDING BELOW THE STRUCTURAL CEILING. SOME PROPOSED CONDUIT/WIRE ROUTES RECESSED IN WALL FURR-OUT INSIDE THE OPERATIONS BUILDING BELOW THE STRUCTURAL CEILING. ALL DEVICE ENCLOSURE AND CONDUIT/WIRE SUPPORT/RACKING ATTACHMENT TO METAL CEILING/WALL STRUCTURE SHALL BE AS RECOMMENDED BY THE BUILDING MANUFACTURER. CLOSELY AND CAREFULLY COORDINATE CONDUIT/WIRE SUPPORT/RACKING AND DEVICE ENCLOSURE ATTACHMENT TO METAL STRUCTURE WITH THE BUILDING MANUFACTURER. FURNISH AND INSTALL ALL NECESSARY HARDWARE/FITTINGS/BOLT/NUTS/ETC., PER THE RECOMMENDATIONS OF THE BUILDING MANUFACTURER TO ATTACH ALL METAL CEILING/WALL SURFACE MOUNTED DEVICE ENCLOSURES AND ALL METAL CEILING/WALL SURFACE MOUNTED CONDUIT/WIRE AND MAKE ALL FINAL CONNECTIONS TO THE SATISFACTION OF THE ENGINEER AND THE OWNER AT NO ADDITIONAL COST TO THE OWNER. FURNISH AND INSTALL ADDITIONAL STRUCTURAL BUILDING MEMBERS AS NECESSARY TO SUPPORT PROPOSED DEVICE ENCLOSURE/CONDUIT/WIRE AT NO ADDITIONAL COST TO THE OWNER.
2. SUPPORT/RACK EXPOSED CONDUIT/WIRE PER THE DETAILS ON DRAWING NO. SE-7.
3. NOT ALL ELECTRICAL/MECHANICAL/STRUCTURAL/CIVIL COMPONENTS ARE SHOWN ON THIS DRAWING. REFER TO ELECTRICAL/MECHANICAL/STRUCTURAL/CIVIL DRAWINGS, AS APPLICABLE, FOR ADDITIONAL INFORMATION.
4. DARK LINEWORK DENOTES PROPOSED EQUIPMENT. LIGHT LINEWORK DENOTES FUTURE EQUIPMENT.
5. LOCATIONS/SIZES OF ELECTRICAL EQUIPMENT SHOWN ARE APPROXIMATE. CONTRACTOR SHALL FIELD VERIFY ACTUAL CONDITIONS PRIOR TO COMMENCING CONSTRUCTION.

GENERAL NOTES (CONTINUED):

6. EXTREME CARE MUST BE TAKEN FOR THE INSTALLATION OF THE ELECTRICAL DUCT BANKS SINCE THERE ARE NO AVAILABLE AS BUILT RECORDS OF PROFILES IDENTIFYING THE LOCATION AND INVERT ELEVATIONS OF EXISTING UNDERGROUND ELECTRICAL SYSTEM AND UNDERGROUND MECHANICAL PIPING. ROUTING OF NEW DUCT BANK SHOWN IS BASED ON SCHEMATIC KNOWLEDGE OF THE SIZE OF MECHANICAL PIPING AND THEIR APPROXIMATE SIZE AND/OR LOCATION. NO DATA IS AVAILABLE PERTAINING TO EXISTING UNDERGROUND ELECTRICAL DUCT BANK SYSTEM AND ITS COORDINATION WITH THE UNDERGROUND MECHANICAL SYSTEM. THEREFORE THE CONTRACTOR IS TO EXERCISE EXTREME CARE, VERIFY LOCATION/ROUTING/ELEVATION OF EXISTING UNDERGROUND UTILITIES PRIOR TO COMMENCING FULL SCALE INSTALLATION PROCESS OF THE PROPOSED DUCT BANK SYSTEM. FOLLOWING THE DISCOVERY VERIFICATION OF EXISTING UNDERGROUND UTILITIES, SHOULD ADJUSTMENT/MODIFICATIONS BECOME A NECESSITY TO EITHER THE EXISTING OR PROPOSED SYSTEM (AS APPLICABLE), THE EXISTING DISCOVERED FIELD CONDITIONS MUST BE BROUGHT TO THE ENGINEERS ATTENTION FOR EXECUTION OF THE NECESSARY ADJUSTMENTS/MODIFICATIONS.
7. EXACT LOCATIONS OF MECHANICAL/STRUCTURAL/CIVIL COMPONENTS ARE NOT SHOWN ON THIS DRAWING. REFER TO MECHANICAL/STRUCTURAL/CIVIL DRAWINGS FOR EXACT LOCATIONS OF MECHANICAL/STRUCTURAL/CIVIL ITEMS.
8. CONTRACTOR SHALL SIZE ALL PULLBOXES PER, AND IN ACCORDANCE WITH, THE REQUIREMENTS OF THE NATIONAL ELECTRICAL CODE (N.E.C.).
9. CONTRACTOR SHALL CLOSELY AND CAREFULLY COORDINATE ROUTE OF PROPOSED CONDUIT/WIRE WITH EXISTING AND PROPOSED CIVIL/MECHANICAL/STRUCTURAL/ELECTRICAL SYSTEMS/COMPONENTS/EQUIPMENT/UTILITIES, ETC.
10. PROPOSED CONDUIT/WIRE SHOWN SCHEMATICALLY HERE FOR CLARITY.

KEY NOTES (CONTINUED):

19. PERFORM CONDUIT/WIRE PENETRATION PER THE DETAILS ON DRAWING NO. SE-15. TYPICAL FOR ALL WALL PENETRATIONS.
20. ALTHOUGH ONE RECEPTACLE IS SHOWN HERE, FURNISH AND INSTALL TWO RECEPTACLES VERTICALLY STACKED DEDICATED FOR RAINWATER ULTRA-VIOLET DISINFECTION SYSTEM (TWO ULTRA-VIOLET LAMP ASSEMBLIES). CLOSELY AND CAREFULLY COORDINATE LOCATION OF RECEPTACLE WITH MECHANICAL AND MAKE ALL FINAL CONNECTIONS. FURNISH AND INSTALL TWO SIMPLEX CORD AND PLUG ASSEMBLIES DEDICATED TO THE ULTRA-VIOLET DISINFECTION SYSTEM. REFER TO THE SPECIFICATIONS.
21. FURNISH AND INSTALL EMPTY DEVICE OUTLET BOX RECESSED INTO WALL PER THE DETAILS ON DRAWING NO. SE-19. A DEDICATED TELEPHONE/DATA RECEPTACLE SHALL BE INSTALLED BY OTHERS. CLOSELY AND CAREFULLY COORDINATE TRIM FINISH WITH ARCHITECTURAL AND SPECIFICATIONS AND MAKE ALL FINAL CONNECTIONS. PROVIDE DEVICE OUTLET BOX EXTENSION AND COVERPLATE FOR INSTALLATION BY OTHERS.
22. PROPOSED CONDUIT ROUTES TO CONNECT TO PROPOSED "OP-MCP-001".

REFERENCE DRAWINGS:

HE-11 – EQUIPMENT LOCATION
RE-35 – RE-38 – PANEL SCHEDULES
RE-34 – CONDUIT/WIRE SCHEDULES

RECORD DRAWING
THIS CONSTRUCTION DOCUMENT WAS PREPARED USING INFORMATION SUPPLIED BY THE CONTRACTOR TO REPRESENT CONSTRUCTION CHANGES. THIS DOCUMENT IS FOR INFORMATION AND REFERENCE IN CONNECTION WITH THE OWNER'S USE AND OCCUPANCY OF THE PROJECT AND IS NOT INTENDED FOR BID, PERMIT OR CONSTRUCTION.
BY: K.A. Harutunian DATE: 1/5/2002

REUSE OF DOCUMENTS
This document and the ideas and designs incorporated herein as an instrument of professional service has been developed, designed and prepared by Harutunian Engineering, Inc. and is not to be used, in whole or part, for any other project without the written authorization of the City of Austin and Harutunian Engineering, Inc. @ 2005

HARUTUNIAN ENGINEERING INCORPORATED
ENGINEERING AND ENVIRONMENTAL CONSULTANTS
305 EAST HUNTLAND DRIVE SUITE 800 AUSTIN, TEXAS 78752

NO.	DATE	REVISION	APPROV.
4			
3			
2			
1			

WARNING
0 1/2
IF THIS BAR DOES NOT MEASURE 1" THEN DRAWING IS NOT TO SCALE

K. A. HARUTUNIAN 59181 REGISTERED PROFESSIONAL ENGINEER STATE OF TEXAS
10/18/2003

Dwg. No. HE-15

CITY OF AUSTIN, TEXAS
NORTHEAST INTERIM WASTEWATER TREATMENT PLANT
OPERATIONS BUILDING
AUXILIARY SYSTEMS PLAN

Turner Collie & Braden Inc.
ENGINEERS • PLANNERS • PROJECT MANAGERS

Unit PUBLIC WORKS	Scale 1/4"=1'-0"	Date OCTOBER 2003	
Designed HEI	Checked HEI	Job No. 052-122094-0008	
Drawn HEI	Approved HEI	Sheet 198/327	

THIS CONFORMED DOCUMENT IS RELEASED FOR THE CONVENIENCE OF THE CONTRACTOR UNDER THE AUTHORITY OF:

K. A. HARUTUNIAN, P.E.
TX LIC NO. 59181
11-01-22
DATE

SEE DISCLAIMER FOR LIMITATIONS OF USE.

CONTRACT DOCUMENTS DATED FEBRUARY 28, 2022, AS PART OF THE BIDDING DOCUMENTS (DRAWINGS AND SPECIFICATIONS) AND SUBSEQUENTLY ISSUED ADDENDA HAVE BEEN MERGED INTO ONE CONFORMING SET OF DOCUMENTS FOR THE CONVENIENCE OF THE CONTRACTOR. IF INCONSISTENCIES OR AMBIGUITIES BETWEEN "CONFORMED" DOCUMENTS AND CONTRACT DOCUMENTS ARE FOUND, THE CONTRACT DOCUMENTS SHALL GOVERN.

NOTE: DRAWING IS INTENDED FOR REFERENCE PURPOSES ONLY.

This document, and the designs incorporated herein, is an instrument of professional service that has been developed, designed and prepared by Harutunian Engineering, Inc., and is not to be used, in whole or in part, for any other project without giving written notice to Harutunian Engineering, Inc.

REV	DATE	BY	DESCRIPTION
			CONFORMED DOCUMENTS

DESIGNED HEI
DRAWN HEI
CHECKED HEI
DATE NOVEMBER 2022

** ORIGINAL SEALED BY K.A. HARUTUNIAN 02-28-22 TX PE 59181 **

HARUTUNIAN ENGINEERING INCORPORATED
ENGINEERING AND ENVIRONMENTAL CONSULTANTS
8100 CROSS PARK DRIVE AUSTIN, TEXAS 78754
TBPE REGISTRATION NO. F-2408

carollo
TBPELS No. F-882

CITY OF AUSTIN
FOUNDED 1839
CITY OF AUSTIN

CITY OF AUSTIN
WILD HORSE RANCH WWTP EXPANSION
DEMOLITION
OPERATIONS BUILDING
AUXILIARY SYSTEMS PLAN - REFERENCE

VERIFY SCALES
BAR IS ONE INCH ON ORIGINAL DRAWING
0 1"
IF NOT ONE INCH ON THIS SHEET, ADJUST SCALES ACCORDINGLY

JOB NO. 10976A.00
DRAWING NO. 80DE20
SHEET NO. 189 OF 464

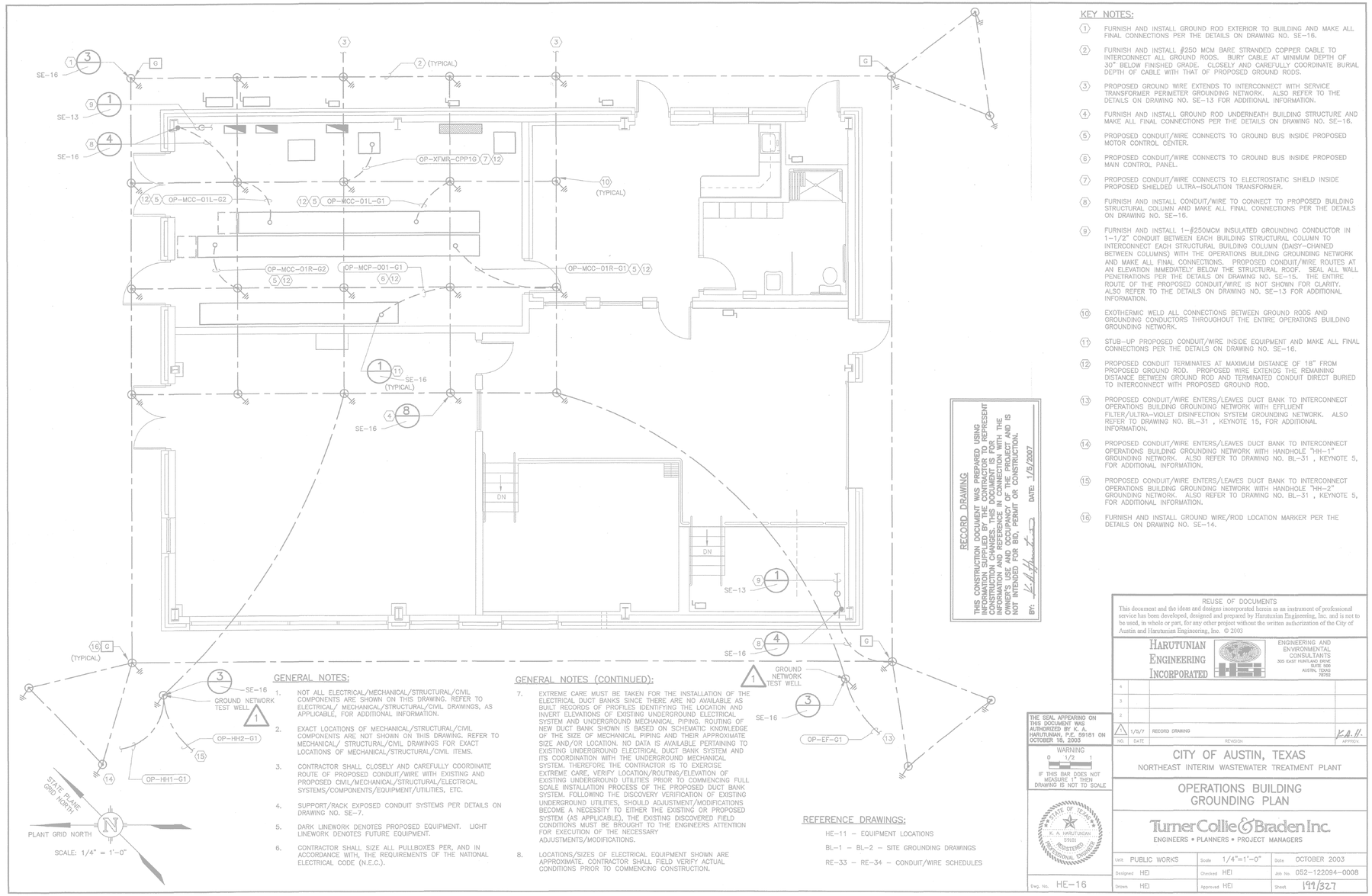

GENERAL NOTES:

1. NOT ALL ELECTRICAL/MECHANICAL/STRUCTURAL/CIVIL COMPONENTS ARE SHOWN ON THIS DRAWING. REFER TO ELECTRICAL/ MECHANICAL/STRUCTURAL/CIVIL DRAWINGS, AS APPLICABLE, FOR ADDITIONAL INFORMATION.
2. EXACT LOCATIONS OF MECHANICAL/STRUCTURAL/CIVIL COMPONENTS ARE NOT SHOWN ON THIS DRAWING. REFER TO MECHANICAL/ STRUCTURAL/CIVIL DRAWINGS FOR EXACT LOCATIONS OF MECHANICAL/STRUCTURAL/CIVIL ITEMS.
3. CONTRACTOR SHALL CLOSELY AND CAREFULLY COORDINATE ROUTE OF PROPOSED CONDUIT/WIRE WITH EXISTING AND PROPOSED CIVIL/MECHANICAL/STRUCTURAL/ELECTRICAL SYSTEMS/COMPONENTS/EQUIPMENT/UTILITIES, ETC.
4. SUPPORT/RACK EXPOSED CONDUIT SYSTEMS PER DETAILS ON DRAWING NO. SE-7.
5. DARK LINEWORK DENOTES PROPOSED EQUIPMENT. LIGHT LINEWORK DENOTES FUTURE EQUIPMENT.
6. CONTRACTOR SHALL SIZE ALL PULLBOXES PER, AND IN ACCORDANCE WITH, THE REQUIREMENTS OF THE NATIONAL ELECTRICAL CODE (N.E.C.).

GENERAL NOTES (CONTINUED):

7. EXTREME CARE MUST BE TAKEN FOR THE INSTALLATION OF THE ELECTRICAL DUCT BANKS SINCE THERE ARE NO AVAILABLE AS BUILT RECORDS OF PROFILES IDENTIFYING THE LOCATION AND INVERT ELEVATIONS OF EXISTING UNDERGROUND ELECTRICAL SYSTEM AND UNDERGROUND MECHANICAL PIPING. ROUTING OF NEW DUCT BANK SHOWN IS BASED ON SCHEMATIC KNOWLEDGE OF THE SIZE OF MECHANICAL PIPING AND THEIR APPROXIMATE SIZE AND/OR LOCATION. NO DATA IS AVAILABLE PERTAINING TO EXISTING UNDERGROUND ELECTRICAL DUCT BANK SYSTEM AND ITS COORDINATION WITH THE UNDERGROUND MECHANICAL SYSTEM. THEREFORE THE CONTRACTOR IS TO EXERCISE EXTREME CARE, VERIFY LOCATION/ROUTING/ELEVATION OF EXISTING UNDERGROUND UTILITIES PRIOR TO COMMENCING FULL SCALE INSTALLATION PROCESS OF THE PROPOSED DUCT BANK SYSTEM. FOLLOWING THE DISCOVERY VERIFICATION OF EXISTING UNDERGROUND UTILITIES, SHOULD ADJUSTMENT/MODIFICATIONS BECOME A NECESSITY TO EITHER THE EXISTING OR PROPOSED SYSTEM (AS APPLICABLE), THE EXISTING DISCOVERED FIELD CONDITIONS MUST BE BROUGHT TO THE ENGINEERS ATTENTION FOR EXECUTION OF THE NECESSARY ADJUSTMENTS/MODIFICATIONS.
8. LOCATIONS/SIZES OF ELECTRICAL EQUIPMENT SHOWN ARE APPROXIMATE. CONTRACTOR SHALL FIELD VERIFY ACTUAL CONDITIONS PRIOR TO COMMENCING CONSTRUCTION.

REFERENCE DRAWINGS:

HE-11 – EQUIPMENT LOCATIONS
BL-1 – BL-2 – SITE GROUNDING DRAWINGS
RE-33 – RE-34 – CONDUIT/WIRE SCHEDULES

KEY NOTES:

1. FURNISH AND INSTALL GROUND ROD EXTERIOR TO BUILDING AND MAKE ALL FINAL CONNECTIONS PER THE DETAILS ON DRAWING NO. SE-16.
2. FURNISH AND INSTALL #250 MCM BARE STRANDED COPPER CABLE TO INTERCONNECT ALL GROUND RODS. BURY CABLE AT MINIMUM DEPTH OF 30" BELOW FINISHED GRADE. CLOSELY AND CAREFULLY COORDINATE BURIAL DEPTH OF CABLE WITH THAT OF PROPOSED GROUND RODS.
3. PROPOSED GROUND WIRE EXTENDS TO INTERCONNECT WITH SERVICE TRANSFORMER PERIMETER GROUNDING NETWORK. ALSO REFER TO THE DETAILS ON DRAWING NO. SE-13 FOR ADDITIONAL INFORMATION.
4. FURNISH AND INSTALL GROUND ROD UNDERNEATH BUILDING STRUCTURE AND MAKE ALL FINAL CONNECTIONS PER THE DETAILS ON DRAWING NO. SE-16.
5. PROPOSED CONDUIT/WIRE CONNECTS TO GROUND BUS INSIDE PROPOSED MOTOR CONTROL CENTER.
6. PROPOSED CONDUIT/WIRE CONNECTS TO GROUND BUS INSIDE PROPOSED MAIN CONTROL PANEL.
7. PROPOSED CONDUIT/WIRE CONNECTS TO ELECTROSTATIC SHIELD INSIDE PROPOSED SHIELDED ULTRA-ISOLATION TRANSFORMER.
8. FURNISH AND INSTALL CONDUIT/WIRE TO CONNECT TO PROPOSED BUILDING STRUCTURAL COLUMN AND MAKE ALL FINAL CONNECTIONS PER THE DETAILS ON DRAWING NO. SE-16.
9. FURNISH AND INSTALL 1-#250MCM INSULATED GROUNDING CONDUCTOR IN 1-1/2" CONDUIT BETWEEN EACH BUILDING STRUCTURAL COLUMN TO INTERCONNECT EACH STRUCTURAL BUILDING COLUMN (DAISY-CHAINED BETWEEN COLUMNS) WITH THE OPERATIONS BUILDING GROUNDING NETWORK AND MAKE ALL FINAL CONNECTIONS. PROPOSED CONDUIT/WIRE ROUTES AT AN ELEVATION IMMEDIATELY BELOW THE STRUCTURAL ROOF. SEAL ALL WALL PENETRATIONS PER THE DETAILS ON DRAWING NO. SE-15. THE ENTIRE ROUTE OF THE PROPOSED CONDUIT/WIRE IS NOT SHOWN FOR CLARITY. ALSO REFER TO THE DETAILS ON DRAWING NO. SE-13 FOR ADDITIONAL INFORMATION.
10. EXOTHERMIC WELD ALL CONNECTIONS BETWEEN GROUND RODS AND GROUNDING CONDUCTORS THROUGHOUT THE ENTIRE OPERATIONS BUILDING GROUNDING NETWORK.
11. STUB-UP PROPOSED CONDUIT/WIRE INSIDE EQUIPMENT AND MAKE ALL FINAL CONNECTIONS PER THE DETAILS ON DRAWING NO. SE-16.
12. PROPOSED CONDUIT TERMINATES AT MAXIMUM DISTANCE OF 18" FROM PROPOSED GROUND ROD. PROPOSED WIRE EXTENDS THE REMAINING DISTANCE BETWEEN GROUND ROD AND TERMINATED CONDUIT DIRECT BURIED TO INTERCONNECT WITH PROPOSED GROUND ROD.
13. PROPOSED CONDUIT/WIRE ENTERS/LEAVES DUCT BANK TO INTERCONNECT OPERATIONS BUILDING GROUNDING NETWORK WITH EFFLUENT FILTER/ULTRA-VIOLET DISINFECTION SYSTEM GROUNDING NETWORK. ALSO REFER TO DRAWING NO. BL-31 , KEYNOTE 15, FOR ADDITIONAL INFORMATION.
14. PROPOSED CONDUIT/WIRE ENTERS/LEAVES DUCT BANK TO INTERCONNECT OPERATIONS BUILDING GROUNDING NETWORK WITH HANDHOLE "HH-1" GROUNDING NETWORK. ALSO REFER TO DRAWING NO. BL-31 , KEYNOTE 5, FOR ADDITIONAL INFORMATION.
15. PROPOSED CONDUIT/WIRE ENTERS/LEAVES DUCT BANK TO INTERCONNECT OPERATIONS BUILDING GROUNDING NETWORK WITH HANDHOLE "HH-2" GROUNDING NETWORK. ALSO REFER TO DRAWING NO. BL-31 , KEYNOTE 5, FOR ADDITIONAL INFORMATION.
16. FURNISH AND INSTALL GROUND WIRE/ROD LOCATION MARKER PER THE DETAILS ON DRAWING NO. SE-14.

RECORD DRAWING
THIS CONSTRUCTION DOCUMENT WAS PREPARED USING INFORMATION SUPPLIED BY THE CONTRACTOR TO REPRESENT CONSTRUCTION CHANGES. THIS DOCUMENT IS FOR INFORMATION AND REFERENCE IN CONNECTION WITH THE CONTRACTOR'S CONSTRUCTION OF THE PROJECT AND IS NOT INTENDED FOR BID, PERMIT OR CONSTRUCTION.
BY: K.A. Harutunian DATE: 1/9/2007

THE SEAL APPEARING ON THIS DOCUMENT WAS AUTHORIZED BY K. A. HARUTUNIAN, P.E. 59181 ON OCTOBER 18, 2003

WARNING
0 1/2 1
IF THIS BAR DOES NOT MEASURE 1" THEN DRAWING IS NOT TO SCALE

STATE OF TEXAS K. A. HARUTUNIAN 59181 REGISTERED PROFESSIONAL ENGINEER

Dwg. No. HE-16

REUSE OF DOCUMENTS
This document and the ideas and designs incorporated herein as an instrument of professional service has been developed, designed and prepared by Harutunian Engineering, Inc. and is not to be used, in whole or part, for any other project without the written authorization of the City of Austin and Harutunian Engineering, Inc. © 2003

HARUTUNIAN ENGINEERING INCORPORATED
ENGINEERING AND ENVIRONMENTAL CONSULTANTS
305 EAST HUNTLAND DRIVE SUITE 500 AUSTIN, TEXAS 78752

NO.	DATE	REVISION	APPROV.
4			
3			
2			
1	1/5/7	RECORD DRAWING	K.A.H.

CITY OF AUSTIN, TEXAS
NORTHEAST INTERIM WASTEWATER TREATMENT PLANT

OPERATIONS BUILDING GROUNDING PLAN

Turner Collie & Braden Inc.
ENGINEERS • PLANNERS • PROJECT MANAGERS

Unit PUBLIC WORKS	Scale 1/4"=1'-0"	Date OCTOBER 2003	
Designed HEI	Checked HEI	Job No. 052-122094-0008	
Drawn HEI	Approved HEI	Sheet 191/327	

THIS CONFORMED DOCUMENT IS RELEASED FOR THE CONVENIENCE OF THE CONTRACTOR UNDER THE AUTHORITY OF:

K. A. HARUTUNIAN, P.E.
TX LIC NO. 59181

11-01-22
DATE

SEE DISCLAIMER FOR LIMITATIONS OF USE.

CONTRACT DOCUMENTS DATED FEBRUARY 28, 2022, AS PART OF THE BIDDING DOCUMENTS (DRAWINGS AND SPECIFICATIONS) AND SUBSEQUENTLY ISSUED ADDENDA HAVE BEEN MERGED INTO ONE CONFORMING SET OF DOCUMENTS FOR THE CONVENIENCE OF THE CONTRACTOR. IF INCONSISTENCIES OR AMBIGUITIES BETWEEN "CONFORMED" DOCUMENTS AND CONTRACT DOCUMENTS ARE FOUND, THE CONTRACT DOCUMENTS SHALL GOVERN.

NOTE: DRAWING IS INTENDED FOR REFERENCE PURPOSES ONLY.

This document, and the designs incorporated herein, is an instrument of professional service that has been developed, designed and prepared by Harutunian Engineering, Inc., and is not to be used, in whole or in part, for any other project without giving written notice to Harutunian Engineering, Inc.

REV	DATE	BY	DESCRIPTION
			CONFORMED DOCUMENTS

DESIGNED HEI
DRAWN HEI
CHECKED HEI
DATE NOVEMBER 2022

** ORIGINAL SEALED BY K.A. HARUTUNIAN 02-28-22 TX PE 59181 **

HARUTUNIAN ENGINEERING INCORPORATED
ENGINEERING AND ENVIRONMENTAL CONSULTANTS
8100 CROSS PARK DRIVE AUSTIN, TEXAS 78754
TBPE REGISTRATION NO. F-2408

carollo
TBPELS No. F-882

CITY OF AUSTIN FOUNDED 1839
CITY OF AUSTIN

CITY OF AUSTIN
WILD HORSE RANCH WWTP EXPANSION
DEMOLITION
OPERATIONS BUILDING GROUNDING PLAN - REFERENCE

VERIFY SCALES
BAR IS ONE INCH ON ORIGINAL DRAWING
0 1"
IF NOT ONE INCH ON THIS SHEET, ADJUST SCALES ACCORDINGLY

JOB NO. 10976A.00
DRAWING NO. 80DE21
SHEET NO. 190 OF 464

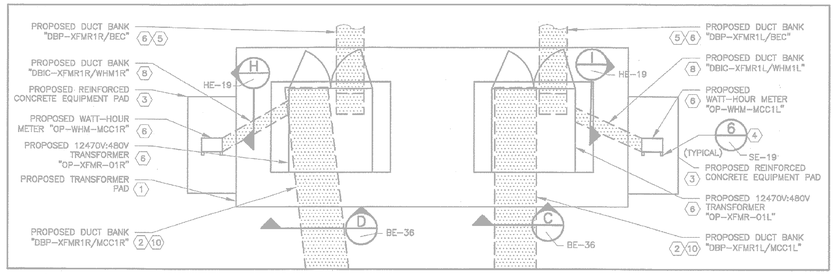

DETAIL 1 / HE-12
SCALE: 1/4"=1'-0"

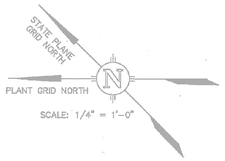

SCALE: 1/4" = 1'-0"

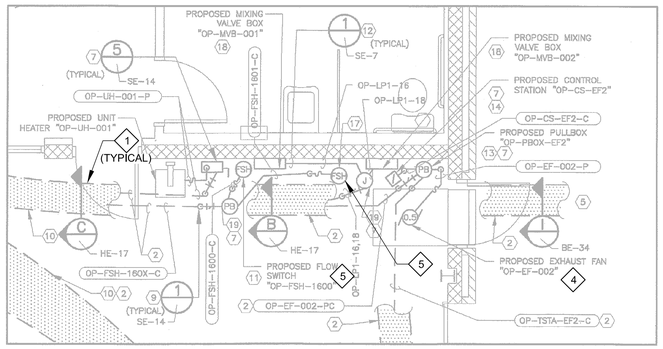

DETAIL 2 / HE-12
SCALE: 3/8"=1'-0"

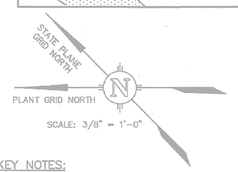

SCALE: 3/8" = 1'-0"

KEY NOTES:

1. FURNISH AND INSTALL PROPOSED TRANSFORMER PAD PER THE DETAILS SHOWN ON THE CIVIL/STRUCTURAL DRAWINGS/SPECIFICATIONS AND PER THE DETAILS SHOWN ON DRAWING NO. SE-20. CLOSELY AND CAREFULLY COORDINATE WITH BLUEBONNET ELECTRIC COOPERATIVE (B.E.C.) AND MAKE ALL FINAL CONNECTIONS. CLOSELY AND CAREFULLY COORDINATE PROPOSED DUCT BANK ROUTE WITH THE DEDICATED CONDUIT ENTRANCE AREA OF THE TRANSFORMER EQUIPMENT PAD, AND WITH B.E.C., AND MAKE ALL FINAL CONNECTIONS.
2. SPACE AND ENCASE IN SAND PER THE DETAILS ON DRAWING NO. SE-8.
3. FURNISH AND INSTALL REINFORCED CONCRETE OUTDOOR EQUIPMENT PAD PER THE DETAILS ON DRAWING NO. SE-14.

KEY NOTES (CONTINUED):

4. FURNISH AND INSTALL SUPPORT RACK CONSISTING OF A MINIMUM OF TWO (2) VERTICAL DOUBLE CONDUIT SUPPORT CHANNELS WITH TWO CORRESPONDING BRACING CHANNELS FOR MOUNTING THE PROPOSED WATT-HOUR METER PER THE DETAILS ON DRAWING NO. SE-19. THE PROPOSED WATT-HOUR METER SHALL BE FURNISHED AND INSTALLED BY BLUEBONNET ELECTRIC COOPERATIVE (B.E.C.). THE CONTRACTOR SHALL PURCHASE THE METER CAN FROM B.E.C. AND INSTALL ON THE PROPOSED SUPPORT RACK AT CENTER ELEVATION OF 4'-6" ABOVE FINISHED GRADE. CLOSELY AND CAREFULLY COORDINATE WITH B.E.C. AND MAKE ALL FINAL CONNECTIONS.
5. PROPOSED DUCT BANK CONTINUES. REFER TO ELECTRICAL SITE PLAN DRAWINGS NO. BE-3 AND BE-33 FOR CONTINUATION.
6. FURNISHED AND INSTALLED BY BLUEBONNET ELECTRIC COOPERATIVE. CLOSELY AND CAREFULLY COORDINATE WITH BLUEBONNET ELECTRIC COOPERATIVE. ALSO REFER TO KEYNOTE FOUR.

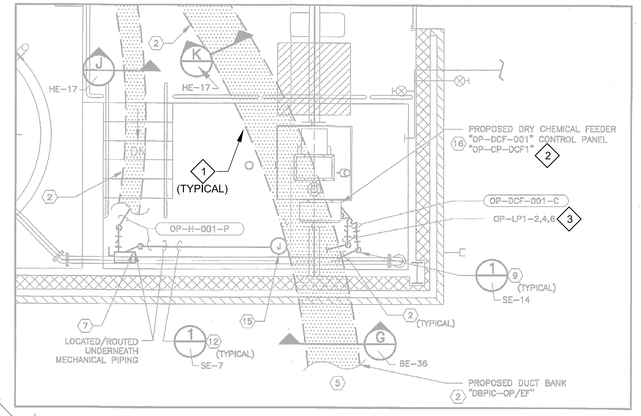

DETAIL 3 / HE-12
SCALE: 3/8"=1'-0"

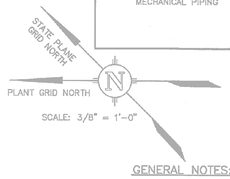

SCALE: 3/8" = 1'-0"

KEY NOTES (CONTINUED):

7. SURFACE MOUNT TO WALL PER THE DETAILS ON DRAWING NO. SE-14.
8. PROPOSED DUCT BANK ROUTES BETWEEN PROPOSED WATT-HOUR METER AND CURRENT TRANSFORMERS/POTENTIAL TRANSFORMERS LOCATED IN 480V SECONDARY COMPARTMENT OF SERVICE TRANSFORMER. THE ENTIRE DUCT BANK ROUTE IS NOT SHOWN FOR CLARITY. CLOSELY AND CAREFULLY COORDINATE ALL REQUIREMENTS WITH BLUEBONNET ELECTRIC COOPERATIVE AND WITH THE DETAILS ON DRAWINGS NO. SE-19 AND SE-20.
9. LOCATE CONDUIT/WIRE STUB-UP IMMEDIATELY ADJACENT TO EQUIPMENT. PROPOSED CONDUIT/WIRE STUB-UP SHOWN SCHEMATICALLY AWAY FROM EQUIPMENT FOR CLARITY. PERFORM STUB-UP PER THE DETAILS ON DRAWING NO. SE-14.
10. PROPOSED DUCT BANK CONTINUES. REFER TO THE OPERATIONS BUILDING POWER AND I&C PLAN ON DRAWING NO. HE-12.
11. PROPOSED PERSONNEL SHOWER/EYE WASH "OP-SHW-002" DEDICATED FLOW SWITCH IS FURNISHED AND INSTALLED BY MECHANICAL. CLOSELY AND CAREFULLY COORDINATE PERSONNEL SHOWER/EYE WASH "OP-SHW-002" REQUIREMENTS WITH MECHANICAL AND MAKE ALL FINAL CONNECTIONS.
12. SURFACE MOUNT CONDUIT/WIRE TO WALL PER THE DETAILS ON DRAWING NO. SE-7.
13. PROPOSED PULLBOX IS MINIMALLY SIZED 12" HIGH X 12" WIDE X 6" DEEP.
14. REFER TO CONTROL STATION FRONT ELEVATION ON DRAWING NO. QE-1 FOR ADDITIONAL INFORMATION. MOUNT ABOVE PULLBOX "OP-PBOX-EF2" ON WALL.
15. FURNISH AND INSTALL JUNCTION BOX SURFACE MOUNTED ON WALL DEDICATED FOR CONNECTION TO HOIST "OP-H-001". CLOSELY AND CAREFULLY COORDINATE LOCATION WITH HOIST MANUFACTURER AND MAKE ALL FINAL CONNECTIONS.
16. MAKE ALL FINAL CONNECTIONS TO PROPOSED CONTROL PANEL PER THE MANUFACTURER'S WIRING DIAGRAMS AND RECOMMENDATIONS. SIZE, FURNISH, AND INSTALL PROPOSED CONDUIT/WIRE AS REQUIRED TO INTERCONNECT PROPOSED CONTROL PANEL WITH DRY CHEMICAL FEEDER "OP-DCF-001" SUB-ASSEMBLY COMPONENTS AND MAKE ALL FINAL CONNECTIONS PER THE MANUFACTURER'S WIRING DIAGRAMS AND RECOMMENDATIONS.
17. PROPOSED PERSONNEL SHOWER/EYE WASH "OP-SHW-003" DEDICATED FLOW SWITCH IS FURNISHED AND INSTALLED BY MECHANICAL. CLOSELY AND CAREFULLY COORDINATE PERSONNEL SHOWER/EYE WASH "OP-SHW-003" REQUIREMENTS WITH MECHANICAL AND MAKE ALL FINAL CONNECTIONS.
18. CLOSELY AND CAREFULLY COORDINATE ALL CONNECTION REQUIREMENTS WITH MECHANICAL AND MAKE ALL FINAL CONNECTIONS PER THE MANUFACTURER'S WIRING DIAGRAMS AND RECOMMENDATIONS.
19. PROPOSED PULLBOX/JUNCTION BOX IS MINIMALLY SIZED 6" HIGH X 6" WIDE X 6" DEEP.

GENERAL NOTES:

1. NOT ALL ELECTRICAL/MECHANICAL/STRUCTURAL/CIVIL COMPONENTS ARE SHOWN ON THIS DRAWING. REFER TO ELECTRICAL/ MECHANICAL/STRUCTURAL/CIVIL DRAWINGS, AS APPLICABLE, FOR ADDITIONAL INFORMATION.
2. EXACT LOCATIONS OF MECHANICAL/STRUCTURAL/CIVIL COMPONENTS ARE NOT SHOWN ON THIS DRAWING. REFER TO MECHANICAL/ STRUCTURAL/CIVIL DRAWINGS FOR EXACT LOCATIONS OF MECHANICAL/STRUCTURAL/CIVIL ITEMS.
3. CONTRACTOR SHALL CLOSELY AND CAREFULLY COORDINATE ROUTE OF PROPOSED CONDUIT/WIRE WITH EXISTING AND PROPOSED CIVIL/MECHANICAL/STRUCTURAL/ELECTRICAL SYSTEMS/COMPONENTS/EQUIPMENT/UTILITIES, ETC.
4. EXTREME CARE MUST BE TAKEN FOR THE INSTALLATION OF THE ELECTRICAL DUCT BANKS SINCE THERE ARE NO AVAILABLE AS BUILT RECORDS OF PROFILES IDENTIFYING THE LOCATION AND INVERT ELEVATIONS OF EXISTING UNDERGROUND ELECTRICAL SYSTEM AND UNDERGROUND MECHANICAL PIPING. ROUTING OF NEW DUCT BANK SHOWN IS BASED ON SCHEMATIC KNOWLEDGE OF THE SIZE OF MECHANICAL PIPING AND THEIR APPROXIMATE SIZE AND/OR LOCATION. NO DATA IS AVAILABLE PERTAINING TO EXISTING UNDERGROUND ELECTRICAL DUCT BANK SYSTEM AND ITS COORDINATION WITH THE UNDERGROUND MECHANICAL SYSTEM. THEREFORE THE CONTRACTOR IS TO EXERCISE EXTREME CARE, VERIFY LOCATION/ROUTING/ELEVATION OF EXISTING UNDERGROUND UTILITIES PRIOR TO COMMENCING FULL SCALE INSTALLATION PROCESS OF THE PROPOSED DUCT BANK SYSTEM. FOLLOWING THE DISCOVERY VERIFICATION OF EXISTING UNDERGROUND UTILITIES, SHOULD ADJUSTMENT/MODIFICATIONS BECOME A NECESSITY TO EITHER THE EXISTING OR PROPOSED SYSTEM (AS APPLICABLE), THE EXISTING DISCOVERED FIELD CONDITIONS MUST BE BROUGHT TO THE ENGINEERS ATTENTION FOR EXECUTION OF THE NECESSARY ADJUSTMENTS/MODIFICATIONS.
5. SUPPORT/RACK EXPOSED CONDUIT SYSTEMS PER DETAILS ON DRAWING NO. SE-7.
6. DARK LINEWORK DENOTES PROPOSED EQUIPMENT. LIGHT LINEWORK DENOTES FUTURE EQUIPMENT.

GENERAL NOTES (CONTINUED):

7. CONTRACTOR SHALL SIZE ALL PULLBOXES PER, AND IN ACCORDANCE WITH, THE REQUIREMENTS OF THE NATIONAL ELECTRICAL CODE (N.E.C.).
8. LOCATIONS/SIZES OF ELECTRICAL EQUIPMENT SHOWN ARE APPROXIMATE. CONTRACTOR SHALL FIELD VERIFY ACTUAL CONDITIONS PRIOR TO COMMENCING CONSTRUCTION.

REFERENCE DRAWINGS:

HE-11 – EQUIPMENT LOCATION

RE-33 – RE-34 – CONDUIT/WIRE SCHEDULE

QE-1 – FIELD CONTROL STATION FRONT ELEVATION

RECORD DRAWING
THIS CONSTRUCTION DOCUMENT WAS PREPARED USING INFORMATION SUPPLIED BY THE CONTRACTOR TO REPRESENT CONSTRUCTION CHANGES. THIS DOCUMENT IS FOR INFORMATION AND REFERENCE IN CONNECTION WITH THE OWNER'S USE AND OCCUPANCY OF THE PROJECT AND IS NOT INTENDED FOR BID, PERMIT OR CONSTRUCTION.
BY: K.A. Harutunian DATE: 1/5/2007

REUSE OF DOCUMENTS
This document and the ideas and designs incorporated herein as an instrument of professional service has been developed, designed and prepared by Harutunian Engineering, Inc. and is not to be used, in whole or part, for any other project without the written authorization of the City of Austin and Harutunian Engineering, Inc. © 2003

HARUTUNIAN ENGINEERING INCORPORATED
ENGINEERING AND ENVIRONMENTAL CONSULTANTS
309 EAST RIVERSIDE DRIVE, SUITE 600, AUSTIN, TEXAS 78704

NO.	DATE	REVISION	APPROV.
4			
3			
2			
1			

WARNING
0 1/2 1
IF THIS BAR DOES NOT MEASURE 1" THEN DRAWING IS NOT TO SCALE

K. A. HARUTUNIAN 59103 REGISTERED PROFESSIONAL ENGINEER STATE OF TEXAS
10/16/2003

Dwg. No. HE-21

CITY OF AUSTIN, TEXAS
NORTHEAST INTERIM WASTEWATER TREATMENT PLANT

OPERATIONS BUILDING
ENLARGED DETAILS (SHEET 1 OF 3)

Turner Collie & Braden Inc.
ENGINEERS • PLANNERS • PROJECT MANAGERS

Unit PUBLIC WORKS	Scale AS NOTED	Date OCTOBER 2003	
Designed HEI	Checked HEI	Job No. 052-122094-0008	
Drawn HEI	Approved HEI	Sheet 204/327	

THIS CONFORMED DOCUMENT IS RELEASED FOR THE CONVENIENCE OF THE CONTRACTOR UNDER THE AUTHORITY OF:

K. A. Harutunian 11-01-22

K. A. HARUTUNIAN, P.E. DATE
TX LIC NO. 59181

SEE DISCLAIMER FOR LIMITATIONS OF USE.

CONTRACT DOCUMENTS DATED FEBRUARY 28, 2022, AS PART OF THE BIDDING DOCUMENTS (DRAWINGS AND SPECIFICATIONS) AND SUBSEQUENTLY ISSUED ADDENDA HAVE BEEN MERGED INTO ONE CONFORMING SET OF DOCUMENTS FOR THE CONVENIENCE OF THE CONTRACTOR. IF INCONSISTENCIES OR AMBIGUITIES BETWEEN "CONFORMED" DOCUMENTS AND CONTRACT DOCUMENTS ARE FOUND, THE CONTRACT DOCUMENTS SHALL GOVERN.

This document, and the designs incorporated herein, is an instrument of professional service that has been developed, designed and prepared by Harutunian Engineering, Inc., and is not to be used, in whole or in part, for any other project without giving written notice to Harutunian Engineering, Inc.

REV	DATE	BY	DESCRIPTION
			CONFORMED DOCUMENTS

DESIGNED HEI
DRAWN HEI
CHECKED HEI
DATE NOVEMBER 2022

** ORIGINAL SEALED BY K.A. HARUTUNIAN 02-28-22 TX PE 59181 **

HARUTUNIAN ENGINEERING INCORPORATED
ENGINEERING AND ENVIRONMENTAL CONSULTANTS
8100 CROSS PARK DRIVE, AUSTIN, TEXAS 78754
TBPE REGISTRATION NO. F-2408

carollo® TBPELS No. F-882

CITY OF AUSTIN FOUNDED 1839

CITY OF AUSTIN

CITY OF AUSTIN
WILD HORSE RANCH WWTP EXPANSION
DEMOLITION
OPERATIONS BUILDING
ENLARGED AREA PLANS - DEMOLITION - 1

VERIFY SCALES
BAR IS ONE INCH ON ORIGINAL DRAWING
0 1"
IF NOT ONE INCH ON THIS SHEET, ADJUST SCALES ACCORDINGLY

JOB NO. 10976A.00
DRAWING NO. 80DE22
SHEET NO. 191 OF 464

KEY NOTES

1. REFER TO DUCT BANK SECTION DEMOLITION SHEETS [80DE26] THROUGH [80DE29] FOR DEMOLITION DETAILS FOR THE EXISTING DUCT BANKS.
2. DISCONNECT EXISTING CONTROL WIRING ROUTING TO/FROM THE MAIN CONTROL PANEL FOR THE DRY FEED CHEMICAL SYSTEM. THE EXISTING CONTROL WIRING SHALL BE RECONNECTED TO PROPOSED TERMINAL BLOCKS WITHIN THE MAIN CONTROL PANEL DURING RENOVATION ACTIVITIES. REFER TO DEMOLITION WIRING SCHEMATIC ON DRAWING NO. [80DN20] FOR ADDITIONAL INFORMATION.
3. REFER TO DEMOLITION PANEL SCHEDULE ON DRAWING NO. [80DE10] AND [80DE13] FOR ADDITIONAL INFORMATION. FIELD VERIFY EXISTING CONDITIONS PRIOR TO COMMENCING DEMOLITION ACTIVITIES.
4. DISCONNECT EXISTING CONTROL WIRING ROUTING TO/FROM THE MAIN CONTROL PANEL FOR THE EXHAUST FAN AND ASSOCIATED SUB-COMPONENTS. THE EXISTING CONTROL WIRING SHALL BE RECONNECTED TO PROPOSED TERMINAL BLOCKS WITHIN THE MAIN CONTROL PANEL DURING RENOVATION ACTIVITIES. REFER TO DEMOLITION WIRING SCHEMATICS ON DRAWING NO. [80DN15] FOR ADDITIONAL INFORMATION.
5. DISCONNECT EXISTING CONTROL WIRING ROUTING TO/FROM THE MAIN CONTROL PANEL FOR THE FLOW SWITCHES. THE EXISTING CONTROL WIRING SHALL BE RECONNECTED TO PROPOSED TERMINAL BLOCKS WITHIN THE MAIN CONTROL PANEL DURING RENOVATION ACTIVITIES.

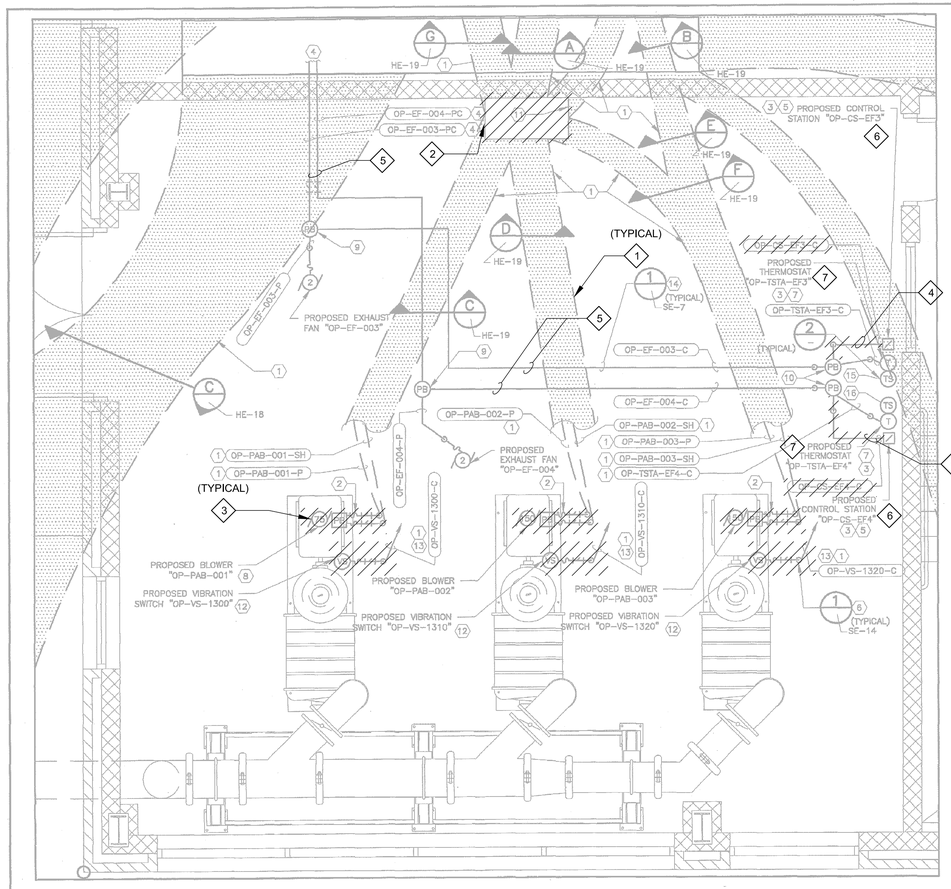

DETAIL 1 HE-12
SCALE: 1/2"=1'-0"

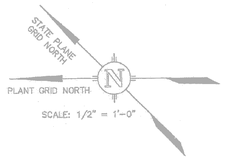

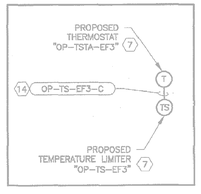

DETAIL 2
SCALE: NTS

NOTE: THIS DRAWING IS TYPICAL FOR THERMOSTATS TAGGED "OP-TSTA-EF2", "OP-TSTA-EF3", AND "OP-TSTA-EF4", CONDUIT/WIRE TAGGED "OP-TS-EF2-C", "OP-TS-EF3-C" AND "OP-TS-EF4-C" AND TEMPERATURE LIMITERS TAGGED "OP-TS-EF2", "OP-TS-EF3" AND "OP-TS-EF4".

KEY NOTES:

(1) PROPOSED CONDUIT/WIRE PENETRATES SLAB AND ROUTES UNDERNEATH SLAB. SPACE AND ENCASE IN SAND PER THE DETAILS ON DRAWING NO. SE-8.

(2) FURNISH AND INSTALL LIQUID-TIGHT FLEXIBLE CONDUIT LENGTH OF 36 INCHES.

(3) SURFACE MOUNT THERMOSTAT, TEMPERATURE LIMITER, AND CONTROL STATION ADJACENT TO EACH OTHER ON WALL AT 4'-6" PER THE DETAILS ON DRAWING NO. SE-14.

(4) PROPOSED CONDUIT/WIRE PENETRATES STRUCTURAL WALL TO ROUTE EXPOSED (HORIZONTALLY STACKED) IN CEILING SPACE OF PROPOSED BLOWER ROOM TO CONNECT TO PROPOSED EXHAUST FAN(S). ENTIRE ROUTE OF PROPOSED CONDUIT/WIRE IS NOT SHOWN FOR CLARITY. REFER TO DRAWING NO. HE-12 , KEYNOTE FOUR FOR ADDITIONAL INFORMATION.

(5) REFER TO CONTROL STATION FRONT ELEVATION ON DRAWING NO. QE-1.

(6) LOCATE CONDUIT/WIRE STUB-UP IMMEDIATELY ADJACENT TO EQUIPMENT. PROPOSED CONDUIT/WIRE STUB-UP SHOWN SCHEMATICALLY AWAY FROM EQUIPMENT FOR CLARITY. PERFORM STUB-UP PER THE DETAILS ON DRAWING NO. SE-14.

(7) PROPOSED THERMOSTAT AND TEMPERATURE LIMITER ARE FURNISHED BY HVAC/MECHANICAL. FURNISH AND INSTALL DEVICE OUTLET ENCLOSURES FOR MOUNTING THERMOSTAT AND TEMPERATURE LIMITER. MOUNT TEMPERATURE LIMITER ADJACENT TO THERMOSTAT. FURNISH AND INSTALL THERMOSTAT/TEMPERATURE LIMITER INTERCONNECT WIRING AND MAKE ALL FINAL CONNECTIONS. CLOSELY AND CAREFULLY COORDINATE WITH HVAC/MECHANICAL.

(8) THE PROPOSED BLOWER RATING WILL BE INCREASED IN THE FUTURE BY OTHERS FROM 75HP TO 150HP. LOCATE ALL PROPOSED CONDUIT/WIRE STUB-UPS DEDICATED TO BLOWER "OP-PAB-001" COMMENSURATELY WITH THAT OF PROPOSED BLOWER "OP-PAB-002" TO FACILITATE THE FUTURE EXPANSION OF BLOWER "OP-PAB-001" FROM 75HP TO 150HP.

(9) SURFACE MOUNT TO CEILING PER THE DETAILS ON DRAWING NO. SE-14. PROPOSED PULLBOX IS MINIMALLY SIZED 6" HIGH X 6" WIDE X 6" DEEP.

(10) PROPOSED PULLBOX IS MINIMALLY SIZED 6" HIGH X 6" WIDE X 6" DEEP. SURFACE MOUNT ON WALL IMMEDIATELY ABOVE PROPOSED THERMOSTAT/CONTROL STATION PER THE DETAILS ON DRAWING NO. SE-14.

(11) THE PROPOSED CONTROL PANEL IS FURNISHED AND INSTALLED BY THE BLOWER MANUFACTURER. SIZE, FURNISH, AND INSTALL ALL CONDUIT/WIRE AND ALL NECESSARY RELATED HARDWARE TO INTERCONNECT ALL BLOWER SUB-COMPONENTS WITH THE PROPOSED CONTROL PANEL AND MAKE ALL FINAL CONNECTIONS. MAKE ALL FINAL CONNECTIONS PER THE RECOMMENDATIONS AND WIRING DIAGRAMS PROVIDED BY THE BLOWER MANUFACTURER. ALSO ADHERE TO THE REQUIREMENTS OF THE NATIONAL ELECTRICAL CODE (N.E.C.) AND THE SPECIFICATIONS.

(12) AN ATTEMPT HAS BEEN MADE TO IDENTIFY THE ACTUAL DEVICE REQUIRED. THE DEVICE LOCATION IS APPROXIMATE. THE ACTUAL DEVICE QUANTITY/LOCATION MAY VARY. CLOSELY AND CAREFULLY VERIFY LOCATION AND QUANTITY WITH THE SPECIFICATIONS AND THE EQUIPMENT MANUFACTURER. FURNISH AND INSTALL ALL NECESSARY DEVICE(S), DEVICE(S) INTERCONNECT CONDUIT/WIRE AND MAKE ALL FINAL CONNECTIONS PER THE SPECIFICATIONS, THE MANUFACTURER'S RECOMMENDATIONS, AND THE MANUFACTURER'S WIRING DIAGRAMS.

(13) THE CONTRACTOR SHALL SIZE PROPOSED CONDUIT/WIRE PER THE SPECIFICATIONS. CLOSELY AND CAREFULLY COORDINATE DEVICE WIRING REQUIREMENTS WITH THE MANUFACTURER'S WIRING DIAGRAMS AND THE SPECIFICATIONS. CLOSELY AND CAREFULLY COORDINATE CONDUIT/WIRE CONNECTION WITH THE MANUFACTURER AND MAKE ALL FINAL CONNECTIONS. FIELD ROUTE PROPOSED CONDUIT/WIRE PER THE SPECIFICATIONS TO THE SATISFACTION OF THE ENGINEER AND THE OWNER AT NO ADDITIONAL COST TO THE OWNER. CLOSELY AND CAREFULLY COORDINATE ROUTE OF PROPOSED CONDUIT/WIRE, VERIFYING ALL POINTS OF CONNECTION PRIOR TO COMMENCING INSTALLATION.

(14) SURFACE MOUNT PROPOSED CONDUIT/WIRE PER THE DETAILS ON DRAWING NO. SE-7.

(15) PROPOSED TEMPERATURE LIMITER "OP-TS-EF3".

(16) PROPOSED TEMPERATURE LIMITER "OP-TS-EF4".

GENERAL NOTES:

1. NOT ALL ELECTRICAL/MECHANICAL/STRUCTURAL/CIVIL COMPONENTS ARE SHOWN ON THIS DRAWING. REFER TO ELECTRICAL/ MECHANICAL/STRUCTURAL/CIVIL DRAWINGS, AS APPLICABLE, FOR ADDITIONAL INFORMATION.
2. EXACT LOCATIONS OF MECHANICAL/STRUCTURAL/CIVIL COMPONENTS ARE NOT SHOWN ON THIS DRAWING. REFER TO MECHANICAL/ STRUCTURAL/CIVIL DRAWINGS FOR EXACT LOCATIONS OF MECHANICAL/STRUCTURAL/CIVIL ITEMS.
3. CONTRACTOR SHALL CLOSELY AND CAREFULLY COORDINATE ROUTE OF PROPOSED CONDUIT/WIRE WITH EXISTING AND PROPOSED CIVIL/MECHANICAL/STRUCTURAL/ELECTRICAL SYSTEMS/COMPONENTS/EQUIPMENT/UTILITIES, ETC.
4. EXTREME CARE MUST BE TAKEN FOR THE INSTALLATION OF THE ELECTRICAL DUCT BANKS SINCE THERE ARE NO AVAILABLE AS BUILT RECORDS OF PROFILES IDENTIFYING THE LOCATION AND INVERT ELEVATIONS OF EXISTING UNDERGROUND ELECTRICAL SYSTEM AND UNDERGROUND MECHANICAL PIPING. ROUTING OF NEW DUCT BANK SHOWN IS BASED ON SCHEMATIC KNOWLEDGE OF THE SIZE OF MECHANICAL PIPING AND THEIR APPROXIMATE SIZE AND/OR LOCATION. NO DATA IS AVAILABLE PERTAINING TO EXISTING UNDERGROUND ELECTRICAL DUCT BANK SYSTEM AND ITS COORDINATION WITH THE UNDERGROUND MECHANICAL SYSTEM. THEREFORE THE CONTRACTOR IS TO EXERCISE EXTREME CARE, VERIFY LOCATION/ROUTING/ELEVATION OF EXISTING UNDERGROUND UTILITIES PRIOR TO COMMENCING FULL SCALE INSTALLATION PROCESS OF THE PROPOSED DUCT BANK SYSTEM. FOLLOWING THE DISCOVERY VERIFICATION OF EXISTING UNDERGROUND UTILITIES, SHOULD ADJUSTMENT/MODIFICATIONS BECOME A NECESSITY TO EITHER THE EXISTING OR PROPOSED SYSTEM (AS APPLICABLE), THE EXISTING DISCOVERED FIELD CONDITIONS MUST BE BROUGHT TO THE ENGINEERS ATTENTION FOR EXECUTION OF THE NECESSARY ADJUSTMENTS/MODIFICATIONS.
5. SUPPORT/RACK EXPOSED CONDUIT SYSTEMS PER DETAILS ON DRAWING NO. SE-7.
6. DARK LINEWORK DENOTES PROPOSED EQUIPMENT. LIGHT LINEWORK DENOTES FUTURE EQUIPMENT.
7. CONTRACTOR SHALL SIZE ALL PULLBOXES PER, AND IN ACCORDANCE WITH, THE REQUIREMENTS OF THE NATIONAL ELECTRICAL CODE (N.E.C.).
8. LOCATIONS/SIZES OF ELECTRICAL EQUIPMENT SHOWN ARE APPROXIMATE. CONTRACTOR SHALL FIELD VERIFY ACTUAL CONDITIONS PRIOR TO COMMENCING CONSTRUCTION.

REFERENCE DRAWINGS:

HE-11 – EQUIPMENT LOCATION

RE-33 – RE-34 – CONDUIT/WIRE SCHEDULE

QE-1 – FIELD CONTROL STATION FRONT ELEVATIONS

RECORD DRAWING
THIS CONSTRUCTION DOCUMENT WAS PREPARED USING INFORMATION SUPPLIED BY THE CONTRACTOR TO REPRESENT CONSTRUCTION CHANGES. THIS DOCUMENT IS FOR INFORMATION AND REFERENCE IN CONNECTION WITH THE OWNER'S USE AND OCCUPANCY OF THE PROJECT AND IS NOT INTENDED FOR BID, PERMIT OR CONSTRUCTION.
BY: K.A. Harutunian DATE: 1/5/2007

REUSE OF DOCUMENTS
This document and the ideas and designs incorporated herein as an instrument of professional service has been developed, designed and prepared by Harutunian Engineering, Inc. and is not to be used, in whole or part, for any other project without the written authorization of the City of Austin and Harutunian Engineering, Inc. © 2005

HARUTUNIAN ENGINEERING INCORPORATED
ENGINEERING AND ENVIRONMENTAL CONSULTANTS
305 EAST HIGHLAND DRIVE SUITE 500 AUSTIN, TEXAS 78752

NO.	DATE	REVISION	APPROV.
4			
3			
2			
1			

WARNING
IF THIS BAR DOES NOT MEASURE 1/2" THEN DRAWING IS NOT TO SCALE

STATE OF TEXAS K. A. HARUTUNIAN 59181 REGISTERED PROFESSIONAL ENGINEER 10/11/2003

Dwg. No. HE-22

CITY OF AUSTIN, TEXAS
NORTHEAST INTERIM WASTEWATER TREATMENT PLANT

OPERATIONS BUILDING
ENLARGED DETAILS (SHEET 2 OF 3)

Turner Collie & Braden Inc.
ENGINEERS • PLANNERS • PROJECT MANAGERS

Unit PUBLIC WORKS	Scale AS NOTED	Date OCTOBER 2003	
Designed HEI	Checked HEI	Job No. 052-122094-0008	
Drawn HEI	Approved HEI	Sheet 205/327	

KEY NOTES

1. REFER TO DUCT BANK SECTION DEMOLITION SHEETS [80DE29] THROUGH [80DE29] FOR DEMOLITION DETAILS FOR THE EXISTING DUCT BANKS.
2. DISCONNECT AND REMOVE BLOWER CONTROL PANEL, CABLE/WIRE, EXPOSED CONDUIT, AND SUPPORT SYSTEMS IN THEIR ENTIRETY. CUT CONDUIT FLUSH WITH SLAB AND FILL WITH 50 YEAR NON SHRINK GROUT. REFER TO ONE-LINES AND SCHEMATICS FOR ADDITIONAL INFORMATION.
3. COORDINATE DEMOLITION OF THE BLOWER MOTOR WITH MECHANICAL.
4. DISCONNECT AND REMOVE EXISTING CONTROL WIRING ROUTING BETWEEN THE EXHAUST FAN FIELD CONTROL STATION AND THE MAIN CONTROL PANEL. REFER TO APPLICABLE DEMOLITION EXHAUST FAN WIRING SCHEMATIC ON DRAWING NOS. [80DN16] AND [80DN17] FOR ADDITIONAL INFORMATION.
5. CONTRACTOR SHALL BE AWARE THAT ADDITIONAL WIRE MAY COMBINE WITH THE EXHAUST FAN CONTROL WIRING INTO COMMON CONDUIT(S) BEFORE TERMINATING AT THE MAIN CONTROL PANEL. BASED ON FIELD OBSERVATIONS IT APPEARS THE INTERCONNECT CONDUIT AND WIRE ROUTING FROM THE EXHAUST FAN, CONTROL STATION, THERMOSTAT TO THE MAIN CONTROL PANEL DIFFERS FROM WHAT IS SHOWN ON THIS RECORD DRAWINGS. IN ANY CASE, ONLY DEMOLISH THE WIRING ROUTING TO/FROM THE EXHAUST FAN CONTROL STATION. CONTRACTOR SHALL FIELD VERIFY EXISTING CONDITIONS PRIOR TO COMMENCING DEMOLITION OR RENOVATION ACTIVITIES.
6. THE EXISTING EXHAUST FAN FIELD CONTROL STATIONS (I.E. OP-CS-EF3, OP-CS-EF4) CURRENTLY SHOWN ON THE WEST WALL ON THIS RECORD DRAWINGS ARE ACTUALLY LOCATED ON THE WEST WALL OF THE BLOWER ROOM BASED ON FIELD OBSERVATIONS. DISCONNECT AND REMOVE EXISTING CONTROL STATION FROM ITS CURRENT LOCATION. CONTROL STATION SHALL BE RELOCATED AND RECONNECTED DURING RENOVATION ACTIVITIES. REFER TO APPLICABLE DEMOLITION EXHAUST FAN WIRING SCHEMATIC ON DRAWING NOS. [80DN16] AND [80DN17] FOR ADDITIONAL INFORMATION. REFER TO GENERAL NOTES BELOW FOR ADDITIONAL INFORMATION.
7. EXISTING EXHAUST FAN THERMOSTAT SHALL REMAIN. BASED ON STRUCTURAL DRAWINGS, THE EXISTING CMU WALL BEHIND THE THERMOSTAT MAY NEED TO BE REPLACED FOR INSTALLATION OF A DOUBLE DOOR. IF THE CMU CONCRETE BLOCKS NEED TO BE REPLACED, THEN THE CONTRACTOR SHALL DISCONNECT AND REMOVE THE THERMOSTAT. THE EXISTING THERMOSTAT SHALL BE REINSTALLED IN THE SAME LOCATION DURING RENOVATION ACTIVITIES. COORDINATE WITH STRUCTURAL PRIOR TO COMMENCING MODIFICATION ACTIVITIES.

GENERAL NOTES:

1. CONTRACTOR SHALL BE AWARE THAT CONDUIT SEALS MAY NEED TO BE REMOVED TO ALLOW FOR DEMOLITION OF EXISTING CONDUIT/WIRING. AFTER FIELD INVESTIGATIONS, IF IT IS DETERMINED THAT A CONDUIT CONTAINING WIRING TO BE DEMOLISHED AND WIRING TO REMAIN, THEN IT IS THE RESPONSIBILITY OF THE CONTRACT TO PROVIDE NEW CONDUIT, WIRE AND SEALS AS NECESSARY FOR A FULLY FUNCTIONAL INSTALLATION.
2. REFER TO MECHANICAL PLAN DRAWINGS AND CONTRACT DOCUMENTS FOR ADDITIONAL REQUIREMENTS AND INFORMATION REGARDING THE DEMOLITION OF THE PACKAGED BLOWER SYSTEM.

THIS CONFORMED DOCUMENT IS RELEASED FOR THE CONVENIENCE OF THE CONTRACTOR UNDER THE AUTHORITY OF:

K. A. Harutunian — 11-01-22

K. A. HARUTUNIAN, P.E. — DATE
TX LIC NO. 59181

SEE DISCLAIMER FOR LIMITATIONS OF USE.

CONTRACT DOCUMENTS DATED FEBRUARY 28, 2022, AS PART OF THE BIDDING DOCUMENTS (DRAWINGS AND SPECIFICATIONS) AND SUBSEQUENTLY ISSUED ADDENDA HAVE BEEN MERGED INTO ONE CONFORMING SET OF DOCUMENTS FOR THE CONVENIENCE OF THE CONTRACTOR. IF INCONSISTENCIES OR AMBIGUITIES BETWEEN "CONFORMED" DOCUMENTS AND CONTRACT DOCUMENTS ARE FOUND, THE CONTRACT DOCUMENTS SHALL GOVERN.

This document, and the designs incorporated herein, is an instrument of professional service that has been developed, designed and prepared by Harutunian Engineering, Inc., and is not to be used, in whole or in part, for any other project without giving written notice to Harutunian Engineering, Inc.

REV	DATE	BY	DESCRIPTION
			CONFORMED DOCUMENTS

DESIGNED HEI
DRAWN HEI
CHECKED HEI
DATE NOVEMBER 2022

** ORIGINAL SEALED BY K.A. HARUTUNIAN 02-28-22 TX PE 59181 **

HARUTUNIAN ENGINEERING INCORPORATED
ENGINEERING AND ENVIRONMENTAL CONSULTANTS
8100 CROSS PARK DRIVE AUSTIN, TEXAS 78754
TBPE REGISTRATION NO. F-2408

carollo TBPELS No. F-882

CITY OF AUSTIN FOUNDED 1839 — CITY OF AUSTIN

CITY OF AUSTIN
WILD HORSE RANCH WWTP EXPANSION
DEMOLITION
BLOWER ROOM
PLAN - DEMOLITION

VERIFY SCALES
BAR IS ONE INCH ON ORIGINAL DRAWING
0 1"
IF NOT ONE INCH ON THIS SHEET, ADJUST SCALES ACCORDINGLY

JOB NO. 10976A.00
DRAWING NO. 80DE23
SHEET NO. 192 OF 464

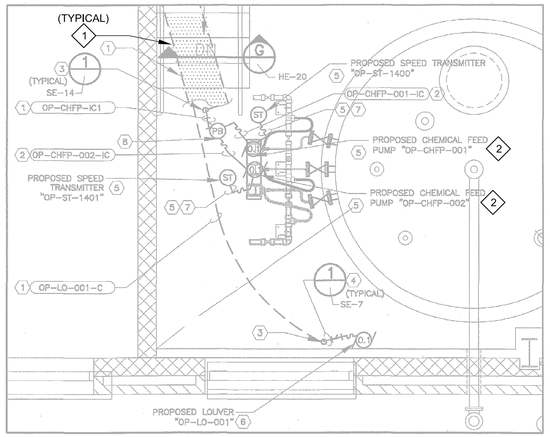

DETAIL 1 / HE-12
SCALE: 1/2"=1'-0"

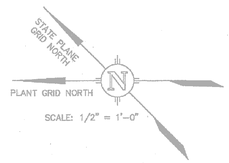

SCALE: 1/2" = 1'-0"

KEY NOTES:

1. SPACE AND ENCASE IN SAND PER THE DETAILS ON DRAWING NO. SE-8.
2. RACK MOUNT PER THE DETAILS ON DRAWING NO. SE-7 IMMEDIATELY ADJACENT TO PROPOSED CHEMICAL FEED PUMP. CLOSELY AND CAREFULLY COORDINATE ROUTE AND SUPPORT WITH CHEMICAL FEED PUMP DEDICATED CONVENIENCE RECEPTACLES IN VICINITY. ALSO REFER TO DRAWING NO. HE-15 , KEYNOTE EIGHT, FOR ADDITIONAL INFORMATION.
3. LOCATE CONDUIT/WIRE STUB-UP IMMEDIATELY ADJACENT TO EQUIPMENT. PROPOSED CONDUIT/WIRE STUB-UP SHOWN SCHEMATICALLY AWAY FROM EQUIPMENT FOR CLARITY. PERFORM STUB-UP PER THE DETAILS ON DRAWING NO. SE-14.
4. SURFACE MOUNT CONDUIT/WIRE PER THE DETAILS ON DRAWING NO. SE-7.
5. FURNISHED AND INSTALLED BY MECHANICAL. CLOSELY AND CAREFULLY COORDINATE WITH MECHANICAL AND MAKE ALL FINAL CONNECTIONS PER THE MANUFACTURER'S WIRING DIAGRAMS AND RECOMMENDATIONS.
6. MAKE ALL FINAL CONNECTIONS TO LOUVER PER THE LOUVER MANUFACTURER'S WIRING DIAGRAMS AND RECOMMENDATIONS. ALSO REFER TO CONTROL LOGIC ON DRAWING NO. RE-21 FOR ADDITIONAL INFORMATION.
7. VENDOR SUPPLIED CABLE. CLOSELY AND CAREFULLY COORDINATE WITH MECHANICAL AND MAKE ALL FINAL CONNECTIONS.
8. PROPOSED PULLBOX "OP-PBOX-CHFPIC". FURNISH AND INSTALL PULLBOX IMMEDIATELY ADJACENT TO PROPOSED CHEMICAL FEED PUMP "OP-CHFP-002". PROPOSED PULLBOX IS SHOWN AWAY FROM PUMP FOR PURPOSES OF CLARITY. PROPOSED PULLBOX IS MINIMALLY SIZED 6" HIGH X 8" WIDE X 6" DEEP. COIL 6'-0" OF UNUSED PROPOSED CABLE INSIDE OF PROPOSED PULL BOX FOR FUTURE USE. MOUNT ON SINGLE CONDUIT SUPPORT CHANNEL SIMILAR TO DETAILS ON DRAWING NO. SE-14.

GENERAL NOTES:

1. NOT ALL ELECTRICAL/MECHANICAL/STRUCTURAL/CIVIL COMPONENTS ARE SHOWN ON THIS DRAWING. REFER TO ELECTRICAL/MECHANICAL/STRUCTURAL/CIVIL DRAWINGS, AS APPLICABLE, FOR ADDITIONAL INFORMATION.
2. EXACT LOCATIONS OF MECHANICAL/STRUCTURAL/CIVIL COMPONENTS ARE NOT SHOWN ON THIS DRAWING. REFER TO MECHANICAL/STRUCTURAL/CIVIL DRAWINGS FOR EXACT LOCATIONS OF MECHANICAL/STRUCTURAL/CIVIL ITEMS.
3. CONTRACTOR SHALL CLOSELY AND CAREFULLY COORDINATE ROUTE OF PROPOSED CONDUIT/WIRE WITH EXISTING AND PROPOSED CIVIL/MECHANICAL/STRUCTURAL/ELECTRICAL SYSTEMS/COMPONENTS/EQUIPMENT/UTILITIES, ETC.
4. EXTREME CARE MUST BE TAKEN FOR THE INSTALLATION OF THE ELECTRICAL DUCT BANKS SINCE THERE ARE NO AVAILABLE AS BUILT RECORDS OF PROFILES IDENTIFYING THE LOCATION AND INVERT ELEVATIONS OF EXISTING UNDERGROUND ELECTRICAL SYSTEM AND UNDERGROUND MECHANICAL PIPING. ROUTING OF NEW DUCT BANK SHOWN IS BASED ON SCHEMATIC KNOWLEDGE OF THE SIZE OF MECHANICAL PIPING AND THEIR APPROXIMATE SIZE AND/OR LOCATION. NO DATA IS AVAILABLE PERTAINING TO EXISTING UNDERGROUND ELECTRICAL DUCT BANK SYSTEM AND ITS COORDINATION WITH THE UNDERGROUND MECHANICAL SYSTEM. THEREFORE THE CONTRACTOR IS TO EXERCISE EXTREME CARE, VERIFY LOCATION/ROUTING/ELEVATION OF EXISTING UNDERGROUND UTILITIES PRIOR TO COMMENCING FULL SCALE INSTALLATION PROCESS OF THE PROPOSED DUCT BANK SYSTEM. FOLLOWING THE DISCOVERY VERIFICATION OF EXISTING UNDERGROUND UTILITIES, SHOULD ADJUSTMENT/MODIFICATIONS BECOME A NECESSITY TO EITHER THE EXISTING OR PROPOSED SYSTEM (AS APPLICABLE), THE EXISTING DISCOVERED FIELD CONDITIONS MUST BE BROUGHT TO THE ENGINEERS ATTENTION FOR EXECUTION OF THE NECESSARY ADJUSTMENTS/MODIFICATIONS.
5. SUPPORT/RACK EXPOSED CONDUIT SYSTEMS PER DETAILS ON DRAWING NO. SE-7.
6. DARK LINEWORK DENOTES PROPOSED EQUIPMENT. LIGHT LINEWORK DENOTES FUTURE EQUIPMENT.
7. CONTRACTOR SHALL SIZE ALL PULLBOXES PER, AND IN ACCORDANCE WITH, THE REQUIREMENTS OF THE NATIONAL ELECTRICAL CODE (N.E.C.).
8. LOCATIONS/SIZES OF ELECTRICAL EQUIPMENT SHOWN ARE APPROXIMATE. CONTRACTOR SHALL FIELD VERIFY ACTUAL CONDITIONS PRIOR TO COMMENCING CONSTRUCTION.

REFERENCE DRAWINGS:

HE-11 – EQUIPMENT LOCATION

RE-33 – RE-34 – CONDUIT/WIRE SCHEDULE

QE-1 – FIELD CONTROL STATION FRONT ELEVATION

KEY NOTES

1. REFER TO DUCT BANK SECTION DEMOLITION SHEETS [80DE26] THROUGH [80DE29] FOR DEMOLITION DETAILS FOR THE EXISTING DUCT BANKS.
2. DISCONNECT EXISTING INSTRUMENTATION WIRING ROUTING TO/FROM THE MAIN CONTROL PANEL FOR CHEMICAL FEED PUMPS. THE EXISTING INSTRUMENTATION WIRING SHALL BE RECONNECTED TO PROPOSED TERMINAL BLOCKS WITHIN THE MAIN CONTROL PANEL DURING RENOVATION ACTIVITIES. REFER TO DEMOLITION INSTRUMENTATION WIRING SCHEMATIC ON DRAWING NO. [80DN22] FOR ADDITIONAL INFORMATION.

RECORD DRAWING
THIS CONSTRUCTION DOCUMENT WAS PREPARED USING INFORMATION SUPPLIED BY THE CONTRACTOR TO REPRESENT CONSTRUCTION CHANGES. THIS DOCUMENT IS FOR INFORMATION AND REFERENCE IN CONNECTION WITH THE OWNER'S USE AND OCCUPANCY OF THE PROJECT AND IS NOT INTENDED FOR BID, PERMIT OR CONSTRUCTION.
BY: K.A. Harutunian DATE: 1/5/2007

REUSE OF DOCUMENTS
This document and the ideas and designs incorporated herein as an instrument of professional service has been developed, designed and prepared by Harutunian Engineering, Inc. and is not to be used, in whole or part, for any other project without the written authorization of the City of Austin and Harutunian Engineering, Inc. © 2005

HARUTUNIAN ENGINEERING INCORPORATED
ENGINEERING AND ENVIRONMENTAL CONSULTANTS
909 EAST HUNTLAND DRIVE SUITE 200 AUSTIN, TEXAS 78752

NO.	DATE	REVISION	APPROV.
4			
3			
2			
1			

WARNING
IF THIS BAR DOES NOT MEASURE 1" THEN DRAWING IS NOT TO SCALE
0 1/2 1

K. A. HARUTUNIAN 59181 STATE OF TEXAS REGISTERED PROFESSIONAL ENGINEER
10/18/2003

CITY OF AUSTIN, TEXAS
NORTHEAST INTERIM WASTEWATER TREATMENT PLANT
OPERATIONS BUILDING
ENLARGED DETAILS (SHEET 3 OF 3)

Turner Collie & Braden Inc.
ENGINEERS • PLANNERS • PROJECT MANAGERS

Unit PUBLIC WORKS	Scale 1/2"=1'-0"	Date OCTOBER 2003	
Designed HEI	Checked HEI	Job No. 052-122094-0008	
Drawn HEI	Approved HEI	Sheet 206/827	
Dwg. No. HE-23			

THIS CONFORMED DOCUMENT IS RELEASED FOR THE CONVENIENCE OF THE CONTRACTOR UNDER THE AUTHORITY OF:

K. A. HARUTUNIAN, P.E. 11-01-22
TX LIC NO. 59181 DATE

SEE DISCLAIMER FOR LIMITATIONS OF USE.

CONTRACT DOCUMENTS DATED FEBRUARY 28, 2022, AS PART OF THE BIDDING DOCUMENTS (DRAWINGS AND SPECIFICATIONS) AND SUBSEQUENTLY ISSUED ADDENDA HAVE BEEN MERGED INTO ONE CONFORMING SET OF DOCUMENTS FOR THE CONVENIENCE OF THE CONTRACTOR. IF INCONSISTENCIES OR AMBIGUITIES BETWEEN "CONFORMED" DOCUMENTS AND CONTRACT DOCUMENTS ARE FOUND, THE CONTRACT DOCUMENTS SHALL GOVERN.

This document, and the designs incorporated herein, is an instrument of professional service that has been developed, designed and prepared by Harutunian Engineering, Inc., and is not to be used, in whole or in part, for any other project without giving written notice to Harutunian Engineering, Inc.

REV	DATE	BY	DESCRIPTION
			CONFORMED DOCUMENTS

DESIGNED HEI
DRAWN HEI
CHECKED HEI
DATE NOVEMBER 2022

** ORIGINAL SEALED BY K.A. HARUTUNIAN 02-28-22 TX PE 59181 **

HARUTUNIAN ENGINEERING INCORPORATED
ENGINEERING AND ENVIRONMENTAL CONSULTANTS
8100 CROSS PARK DRIVE AUSTIN, TEXAS 78754
TBPE REGISTRATION NO. F-2408

carollo
TBPELS No. F-882

CITY OF AUSTIN
FOUNDED 1839
CITY OF AUSTIN

CITY OF AUSTIN
WILD HORSE RANCH WWTP EXPANSION
DEMOLITION
OPERATIONS BUILDING
ENLARGED AREA PLANS - DEMOLITION - 2

VERIFY SCALES
BAR IS ONE INCH ON ORIGINAL DRAWING
0 1"
IF NOT ONE INCH ON THIS SHEET, ADJUST SCALES ACCORDINGLY

JOB NO. 10976A.00
DRAWING NO. 80DE24
SHEET NO. 193 OF 464

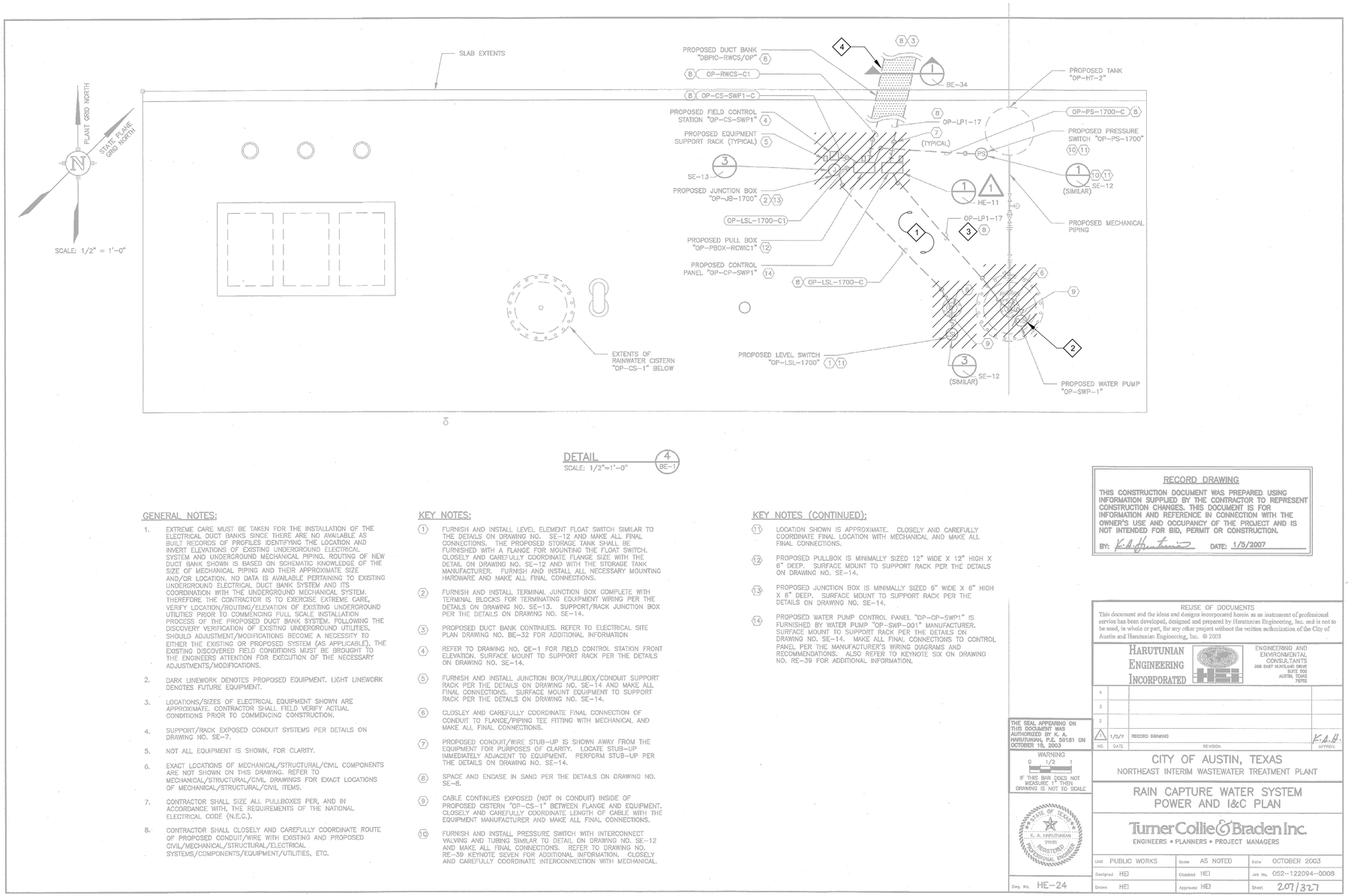

DETAIL 4 / BE-1
SCALE: 1/2"=1'-0"

KEY NOTES

1. DISCONNECT AND REMOVE RAIN WATER COLLECTION SYSTEM AND ASSOCIATED EQUIPMENT IN ITS ENTIRETY. REFER TO DEMOLITION FLOOR PLAN DRAWING NO. [80DE25] AND TO DEMOLITION CONTROL WIRING SCHEMATIC ON DRAWING NO. [80DN18] FOR ADDITIONAL INFORMATION.
2. COORDINATE DEMOLITION OF THE MOTOR WITH MECHANICAL.
3. REFER TO DEMOLITION PANEL SCHEDULE ON DRAWING NO. [80DE10] AND [80DE13] FOR ADDITIONAL INFORMATION. BASED ON FIELD OBSERVATIONS THE ACTUAL CIRCUIT NOS POWERING THE EXISTING RAIN WATER SYSTEM ARE LP1-36,38. CONTRACTOR SHALL FIELD VERIFY EXISTING CONDITIONS PRIOR TO COMMENCING DEMOLITION ACTIVITIES.
4. REFER TO DUCT BANK SECTION DEMOLITION SHEETS [80DE26] THROUGH [80DE29] FOR DEMOLITION DETAILS FOR THE EXISTING DUCT BANKS.

GENERAL NOTES:

1. EXTREME CARE MUST BE TAKEN FOR THE INSTALLATION OF THE ELECTRICAL DUCT BANKS SINCE THERE ARE NO AVAILABLE AS BUILT RECORDS OF PROFILES IDENTIFYING THE LOCATION AND INVERT ELEVATIONS OF EXISTING UNDERGROUND ELECTRICAL SYSTEM AND UNDERGROUND MECHANICAL PIPING. ROUTING OF NEW DUCT BANK SHOWN IS BASED ON SCHEMATIC KNOWLEDGE OF THE SIZE OF MECHANICAL PIPING AND THEIR APPROXIMATE SIZE AND/OR LOCATION. NO DATA IS AVAILABLE PERTAINING TO EXISTING UNDERGROUND ELECTRICAL DUCT BANK SYSTEM AND ITS COORDINATION WITH THE UNDERGROUND MECHANICAL SYSTEM. THEREFORE THE CONTRACTOR IS TO EXERCISE EXTREME CARE, VERIFY LOCATION/ROUTING/ELEVATION OF EXISTING UNDERGROUND UTILITIES PRIOR TO COMMENCING FULL SCALE INSTALLATION PROCESS OF THE PROPOSED DUCT BANK SYSTEM. FOLLOWING THE DISCOVERY VERIFICATION OF EXISTING UNDERGROUND UTILITIES, SHOULD ADJUSTMENT/MODIFICATIONS BECOME A NECESSITY TO EITHER THE EXISTING OR PROPOSED SYSTEM (AS APPLICABLE), THE EXISTING DISCOVERED FIELD CONDITIONS MUST BE BROUGHT TO THE ENGINEERS ATTENTION FOR EXECUTION OF THE NECESSARY ADJUSTMENTS/MODIFICATIONS.
2. DARK LINEWORK DENOTES PROPOSED EQUIPMENT. LIGHT LINEWORK DENOTES FUTURE EQUIPMENT.
3. LOCATIONS/SIZES OF ELECTRICAL EQUIPMENT SHOWN ARE APPROXIMATE. CONTRACTOR SHALL FIELD VERIFY ACTUAL CONDITIONS PRIOR TO COMMENCING CONSTRUCTION.
4. SUPPORT/RACK EXPOSED CONDUIT SYSTEMS PER DETAILS ON DRAWING NO. SE-7.
5. NOT ALL EQUIPMENT IS SHOWN, FOR CLARITY.
6. EXACT LOCATIONS OF MECHANICAL/STRUCTURAL/CIVIL COMPONENTS ARE NOT SHOWN ON THIS DRAWING. REFER TO MECHANICAL/STRUCTURAL/CIVIL DRAWINGS FOR EXACT LOCATIONS OF MECHANICAL/STRUCTURAL/CIVIL ITEMS.
7. CONTRACTOR SHALL SIZE ALL PULLBOXES PER, AND IN ACCORDANCE WITH, THE REQUIREMENTS OF THE NATIONAL ELECTRICAL CODE (N.E.C.).
8. CONTRACTOR SHALL CLOSELY AND CAREFULLY COORDINATE ROUTE OF PROPOSED CONDUIT/WIRE WITH EXISTING AND PROPOSED CIVIL/MECHANICAL/STRUCTURAL/ELECTRICAL SYSTEMS/COMPONENTS/EQUIPMENT/UTILITIES, ETC.

KEY NOTES:

1. FURNISH AND INSTALL LEVEL ELEMENT FLOAT SWITCH SIMILAR TO THE DETAILS ON DRAWING NO. SE-12 AND MAKE ALL FINAL CONNECTIONS. THE PROPOSED STORAGE TANK SHALL BE FURNISHED WITH A FLANGE FOR MOUNTING THE FLOAT SWITCH. CLOSELY AND CAREFULLY COORDINATE FLANGE SIZE WITH THE DETAIL ON DRAWING NO. SE-12 AND WITH THE STORAGE TANK MANUFACTURER. FURNISH AND INSTALL ALL NECESSARY MOUNTING HARDWARE AND MAKE ALL FINAL CONNECTIONS.
2. FURNISH AND INSTALL TERMINAL JUNCTION BOX COMPLETE WITH TERMINAL BLOCKS FOR TERMINATING EQUIPMENT WIRING PER THE DETAILS ON DRAWING NO. SE-13. SUPPORT/RACK JUNCTION BOX PER THE DETAILS ON DRAWING NO. SE-14.
3. PROPOSED DUCT BANK CONTINUES. REFER TO ELECTRICAL SITE PLAN DRAWING NO. BE-32 FOR ADDITIONAL INFORMATION
4. REFER TO DRAWING NO. QE-1 FOR FIELD CONTROL STATION FRONT ELEVATION. SURFACE MOUNT TO SUPPORT RACK PER THE DETAILS ON DRAWING NO. SE-14.
5. FURNISH AND INSTALL JUNCTION BOX/PULLBOX/CONDUIT SUPPORT RACK PER THE DETAILS ON DRAWING NO. SE-14 AND MAKE ALL FINAL CONNECTIONS. SURFACE MOUNT EQUIPMENT TO SUPPORT RACK PER THE DETAILS ON DRAWING NO. SE-14.
6. CLOSLEY AND CAREFULLY COORDINATE FINAL CONNECTION OF CONDUIT TO FLANGE/PIPING TEE FITTING WITH MECHANICAL AND MAKE ALL FINAL CONNECTIONS.
7. PROPOSED CONDUIT/WIRE STUB-UP IS SHOWN AWAY FROM THE EQUIPMENT FOR PURPOSES OF CLARITY. LOCATE STUB-UP IMMEDIATELY ADJACENT TO EQUIPMENT. PERFORM STUB-UP PER THE DETAILS ON DRAWING NO. SE-14.
8. SPACE AND ENCASE IN SAND PER THE DETAILS ON DRAWING NO. SE-8.
9. CABLE CONTINUES EXPOSED (NOT IN CONDUIT) INSIDE OF PROPOSED CISTERN "OP-CS-1" BETWEEN FLANGE AND EQUIPMENT. CLOSELY AND CAREFULLY COORDINATE LENGTH OF CABLE WITH THE EQUIPMENT MANUFACTURER AND MAKE ALL FINAL CONNECTIONS.
10. FURNISH AND INSTALL PRESSURE SWITCH WITH INTERCONNECT VALVING AND TUBING SIMILAR TO DETAIL ON DRAWING NO. SE-12 AND MAKE ALL FINAL CONNECTIONS. REFER TO DRAWING NO. RE-39 KEYNOTE SEVEN FOR ADDITIONAL INFORMATION. CLOSELY AND CAREFULLY COORDINATE INTERCONNECTION WITH MECHANICAL.

KEY NOTES (CONTINUED):

11. LOCATION SHOWN IS APPROXIMATE. CLOSELY AND CAREFULLY COORDINATE FINAL LOCATION WITH MECHANICAL AND MAKE ALL FINAL CONNECTIONS.
12. PROPOSED PULLBOX IS MINIMALLY SIZED 12" WIDE X 12" HIGH X 6" DEEP. SURFACE MOUNT TO SUPPORT RACK PER THE DETAILS ON DRAWING NO. SE-14.
13. PROPOSED JUNCTION BOX IS MINIMALLY SIZED 6" WIDE X 6" HIGH X 6" DEEP. SURFACE MOUNT TO SUPPORT RACK PER THE DETAILS ON DRAWING NO. SE-14.
14. PROPOSED WATER PUMP CONTROL PANEL "OP-CP-SWP1" IS FURNISHED BY WATER PUMP "OP-SWP-001" MANUFACTURER. SURFACE MOUNT TO SUPPORT RACK PER THE DETAILS ON DRAWING NO. SE-14. MAKE ALL FINAL CONNECTIONS TO CONTROL PANEL PER THE MANUFACTURER'S WIRING DIAGRAMS AND RECOMMENDATIONS. ALSO REFER TO KEYNOTE SIX ON DRAWING NO. RE-39 FOR ADDITIONAL INFORMATION.

RECORD DRAWING

THIS CONSTRUCTION DOCUMENT WAS PREPARED USING INFORMATION SUPPLIED BY THE CONTRACTOR TO REPRESENT CONSTRUCTION CHANGES. THIS DOCUMENT IS FOR INFORMATION AND REFERENCE IN CONNECTION WITH THE OWNER'S USE AND OCCUPANCY OF THE PROJECT AND IS NOT INTENDED FOR BID, PERMIT OR CONSTRUCTION.

BY: K.A. Harutunian DATE: 1/5/2007

REUSE OF DOCUMENTS
This document and the ideas and designs incorporated herein as an instrument of professional service has been developed, designed and prepared by Harutunian Engineering, Inc. and is not to be used, in whole or part, for any other project without the written authorization of the City of Austin and Harutunian Engineering, Inc. © 2003

HARUTUNIAN ENGINEERING INCORPORATED
ENGINEERING AND ENVIRONMENTAL CONSULTANTS
306 EAST RANKLAND DRIVE SUITE 600 AUSTIN, TEXAS 78753

NO.	DATE	REVISION	APPROV.
4			
3			
2			
1	1/5/7	RECORD DRAWING	K.A.H.

THE SEAL APPEARING ON THIS DOCUMENT WAS AUTHORIZED BY K. A. HARUTUNIAN, P.E. 59181 ON OCTOBER 18, 2003

WARNING
0 1/2 1
IF THIS BAR DOES NOT MEASURE 1" THEN DRAWING IS NOT TO SCALE

STATE OF TEXAS · K. A. HARUTUNIAN · 59181 · REGISTERED PROFESSIONAL ENGINEER

CITY OF AUSTIN, TEXAS
NORTHEAST INTERIM WASTEWATER TREATMENT PLANT

RAIN CAPTURE WATER SYSTEM
POWER AND I&C PLAN

Turner Collie & Braden Inc.
ENGINEERS • PLANNERS • PROJECT MANAGERS

Unit PUBLIC WORKS	Scale AS NOTED	Date OCTOBER 2003	
Designed HEI	Checked HEI	Job No. 052-122094-0008	
Drawn HEI	Approved HEI	Sheet 207/327	
Dwg. No. HE-24			

THIS CONFORMED DOCUMENT IS RELEASED FOR THE CONVENIENCE OF THE CONTRACTOR UNDER THE AUTHORITY OF:

K. A. HARUTUNIAN, P.E.
TX LIC NO. 59181

11-01-22
DATE

SEE DISCLAIMER FOR LIMITATIONS OF USE.

CONTRACT DOCUMENTS DATED FEBRUARY 28, 2022, AS PART OF THE BIDDING DOCUMENTS (DRAWINGS AND SPECIFICATIONS) AND SUBSEQUENTLY ISSUED ADDENDA HAVE BEEN MERGED INTO ONE CONFORMING SET OF DOCUMENTS FOR THE CONVENIENCE OF THE CONTRACTOR. IF INCONSISTENCIES OR AMBIGUITIES BETWEEN "CONFORMED" DOCUMENTS AND CONTRACT DOCUMENTS ARE FOUND, THE CONTRACT DOCUMENTS SHALL GOVERN.

This document, and the designs incorporated herein, is an instrument of professional service that has been developed, designed and prepared by Harutunian Engineering, Inc., and is not to be used, in whole or in part, for any other project without giving written notice to Harutunian Engineering, Inc.

REV	DATE	BY	DESCRIPTION
			CONFORMED DOCUMENTS

DESIGNED HEI
DRAWN HEI
CHECKED HEI
DATE NOVEMBER 2022

** ORIGINAL SEALED BY K.A. HARUTUNIAN 02-28-22 TX PE 59181 **

HARUTUNIAN ENGINEERING INCORPORATED
ENGINEERING AND ENVIRONMENTAL CONSULTANTS
8100 CROSS PARK DRIVE
AUSTIN, TEXAS 78754
TBPE REGISTRATION NO. F-2408

carollo
TBPELS No. F-882

CITY OF AUSTIN
FOUNDED 1839

CITY OF AUSTIN

CITY OF AUSTIN
WILD HORSE RANCH WWTP EXPANSION
DEMOLITION
RAIN WATER COLLECTION SYSTEM PLAN - DEMOLITION

VERIFY SCALES
BAR IS ONE INCH ON ORIGINAL DRAWING
0 1"
IF NOT ONE INCH ON THIS SHEET, ADJUST SCALES ACCORDINGLY

JOB NO. 10976A.00
DRAWING NO. 80DE25
SHEET NO. 194 OF 464

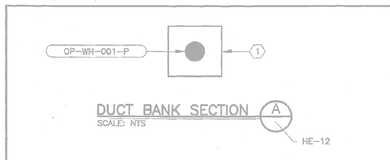

DUCT BANK SECTION A
SCALE: NTS
HE-12

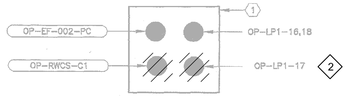

DUCT BANK SECTION B
SCALE: NTS
HE-21

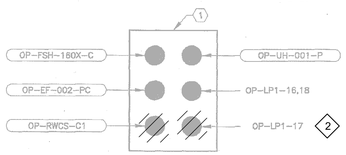

DUCT BANK SECTION C
SCALE: NTS
HE-12 , HE-21

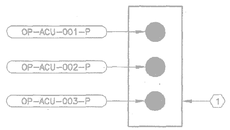

DUCT BANK SECTION D
SCALE: NTS
HE-12

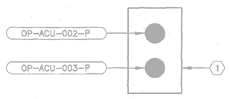

DUCT BANK SECTION E
SCALE: NTS
HE-12

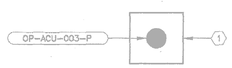

DUCT BANK SECTION F
SCALE: NTS
HE-12

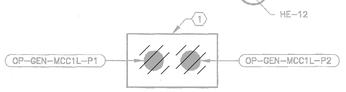

DUCT BANK SECTION G
SCALE: NTS
HE-12

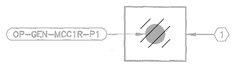

DUCT BANK SECTION H
SCALE: NTS
HE-12

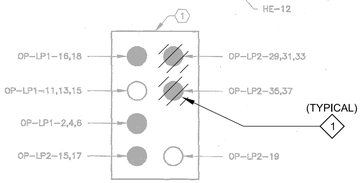

DUCT BANK SECTION I
SCALE: NTS
HE-12

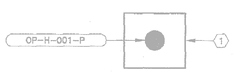

DUCT BANK SECTION J
SCALE: NTS
HE-12 , HE-21

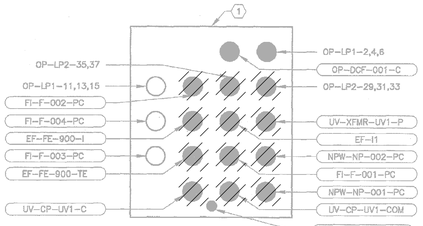

DUCT BANK SECTION K
SCALE: NTS
HE-12 , HE-21

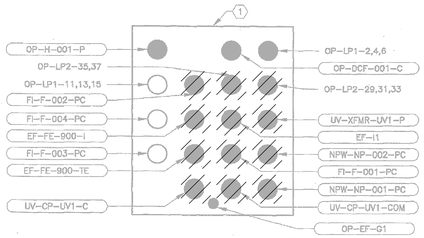

DUCT BANK SECTION L
SCALE: NTS
HE-12

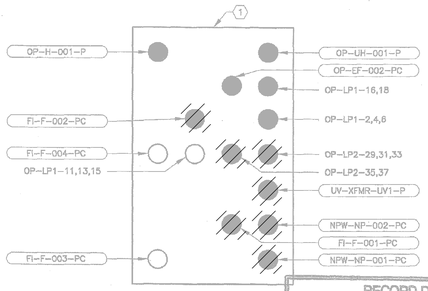

DUCT BANK SECTION M
SCALE: NTS

RECORD DRAWING
THIS CONSTRUCTION DOCUMENT WAS PREPARED USING INFORMATION SUPPLIED BY THE CONTRACTOR TO REPRESENT CONSTRUCTION CHANGES. THIS DOCUMENT IS FOR INFORMATION AND REFERENCE IN CONNECTION WITH THE OWNER'S USE AND OCCUPANCY OF THE PROJECT AND IS NOT PREPARED FOR BID, PERMIT OR CONSTRUCTION.
BY: K.A. Harutunian DATE: 1/5/2007

NOTE: REFER TO "CONDUIT/DUCT BANK SECTION DIMENSION TABLE" ON THIS DRAWING FOR MAXIMUM DIMENSIONS OF THE CONDUIT/DUCT BANK SECTIONS ON THIS DRAWING.

CONDUIT/DUCT BANK SECTION DIMENSION TABLE

LEGEND:

NOTE: DIMENSIONS SHOWN ON TABLE ARE MAXIMUM DIMENSIONS IN INCHES.

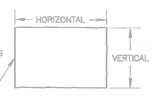

SECTION IDENTIFIER	HORIZONTAL (INCHES)	VERTICAL (INCHES)
A	12"	12"
B	18"	18"
C	18"	24"
D	12"	24"
E	12"	18"
F	12"	12"
G	18"	12"
H	12"	12"
I	18"	30"
J	12"	12"
K	30"	30"
L	30"	30"
M	30"	42"

KEY NOTES:

1 SPACE AND ENCASE IN SAND PER THE DETAILS ON DRAWING NO. SE-8.

GENERAL NOTES:

1. EXTREME CARE MUST BE TAKEN FOR THE INSTALLATION OF THE ELECTRICAL DUCT BANKS. SINCE THERE ARE NO AVAILABLE AS BUILT RECORDS OF PROFILES IDENTIFYING THE LOCATION AND INVERT ELEVATIONS OF EXISTING UNDERGROUND ELECTRICAL SYSTEM AND UNDERGROUND MECHANICAL PIPING, ROUTING OF NEW DUCT BANK SHOWN IS BASED ON SCHEMATIC KNOWLEDGE OF THE SIZE OF MECHANICAL PIPING AND THEIR APPROXIMATE SIZE AND/OR LOCATION. NO DATA IS AVAILABLE PERTAINING TO EXISTING UNDERGROUND ELECTRICAL DUCT BANK SYSTEM AND ITS COORDINATION WITH THE UNDERGROUND MECHANICAL SYSTEM. THEREFORE THE CONTRACTOR IS TO EXERCISE EXTREME CARE, VERIFY LOCATION/ROUTING/ELEVATION OF EXISTING UNDERGROUND UTILITIES PRIOR TO COMMENCING FULL SCALE INSTALLATION PROCESS OF THE PROPOSED DUCT BANK SYSTEM. FOLLOWING THE DISCOVERY VERIFICATION OF EXISTING UNDERGROUND UTILITIES, SHOULD ADJUSTMENT/MODIFICATIONS BECOME A NECESSITY TO EITHER THE EXISTING OR PROPOSED SYSTEM (AS APPLICABLE), THE EXISTING DISCOVERED FIELD CONDITIONS MUST BE BROUGHT TO THE ENGINEERS ATTENTION FOR EXECUTION OF THE NECESSARY ADJUSTMENTS/MODIFICATIONS.

REFERENCE DRAWINGS:

RE-33 – RE-34 – CONDUIT/WIRE SCHEDULE

RE-35 – RE-38 – PANEL SCHEDULES

WARNING
0 1/2
IF THIS BAR DOES NOT MEASURE 1" THEN DRAWING IS NOT TO SCALE

K. A. HARUTUNIAN 39161 REGISTERED PROFESSIONAL ENGINEER STATE OF TEXAS
10/14/2003

Dwg. No. HE-17

KEY NOTES:

1. DISCONNECT AND REMOVE CABLE/WIRE IN ITS ENTIRETY FROM CONDUIT IN DUCT BANK. CONDUIT SHALL REMAIN.
2. RECORD DRAWINGS INDICATE THAT CIRCUIT LP1-17, 19 POWERS THE EXISTING RAIN WATER SYSTEM. HOWEVER, BASED ON FIELD OBSERVATIONS THE ACTUAL CIRCUIT NUMBERS POWERING THE EXISTING RAIN WATER SYSTEM AND WATER PUMP "OP-SWP-001" ARE LP1-36,38. CONTRACTOR SHALL FIELD VERIFY EXISTING CONDITIONS PRIOR TO COMMENCING DEMOLITION ACTIVITIES. REFER TO DEMOLITION PANEL SCHEDULE ON DRAWING NO. [80DE10] AND [80DE13] FOR ADDITIONAL INFORMATION.

GENERAL NOTES:

1. REFER TO DEMOLITION PLAN DRAWINGS FOR ADDITIONAL INFORMATION.
2. REFER TO DEMOLITION PANEL SCHEDULES ON DRAWING NOS. [80DE10] - [80DE15] FOR CONDUIT/WIRE UNDERGROUND FROM THE PANELS TO THEIR DESTINATION. THE CIRCUIT NUMBERS SHOWN ON THE RECORD DRAWINGS MAY NOT REFLECT THE CURRENT INSTALLATION. CONTRACTOR SHALL FIELD VERIFY EXISTING CONDITIONS PRIOR TO COMMENCING MODIFICATION ACTIVITIES.

REUSE OF DOCUMENTS
This document and the ideas and designs incorporated herein as an instrument of professional service has been developed, designed and prepared by Harutunian Engineering, Inc. and is not to be used, in whole or part, for any other project without the written authorization of the City of Austin and Harutunian Engineering, Inc. © 2003

HARUTUNIAN ENGINEERING INCORPORATED
ENGINEERING AND ENVIRONMENTAL CONSULTANTS
305 EAST HUNTLAND DRIVE SUITE 500 AUSTIN, TEXAS 78752

NO.	DATE	REVISION	APPROV.
4			
3			
2			
1			

CITY OF AUSTIN, TEXAS
NORTHEAST INTERIM WASTEWATER TREATMENT PLANT
OPERATIONS BUILDING DUCT BANK SECTIONAL VIEWS (SHEET 1 OF 4)
Turner Collie & Braden Inc.
ENGINEERS • PLANNERS • PROJECT MANAGERS

Unit PUBLIC WORKS	Scale NONE	Date OCTOBER 2003	
Designed HEI	Checked HEI	Job No. 052-122094-0008	
Drawn HEI	Approved HEI	Sheet 200/327	

THIS CONFORMED DOCUMENT IS RELEASED FOR THE CONVENIENCE OF THE CONTRACTOR UNDER THE AUTHORITY OF:

K. A. HARUTUNIAN, P.E.
TX LIC NO. 59181

11-01-22
DATE

SEE DISCLAIMER FOR LIMITATIONS OF USE.

CONTRACT DOCUMENTS DATED FEBRUARY 28, 2022, AS PART OF THE BIDDING DOCUMENTS (DRAWINGS AND SPECIFICATIONS) AND SUBSEQUENTLY ISSUED ADDENDA HAVE BEEN MERGED INTO ONE CONFORMING SET OF DOCUMENTS FOR THE CONVENIENCE OF THE CONTRACTOR. IF INCONSISTENCIES OR AMBIGUITIES BETWEEN "CONFORMED" DOCUMENTS AND CONTRACT DOCUMENTS ARE FOUND, THE CONTRACT DOCUMENTS SHALL GOVERN.

This document, and the designs incorporated herein, is an instrument of professional service that has been developed, designed and prepared by Harutunian Engineering, Inc., and is not to be used, in whole or in part, for any other project without giving written notice to Harutunian Engineering, Inc.

REV	DATE	BY	DESCRIPTION
			CONFORMED DOCUMENTS

DESIGNED HEI
DRAWN HEI
CHECKED HEI
DATE NOVEMBER 2022

** ORIGINAL SEALED BY K.A. HARUTUNIAN 02-28-22 TX PE 59181 **

HARUTUNIAN ENGINEERING INCORPORATED
ENGINEERING AND ENVIRONMENTAL CONSULTANTS
8100 CROSS PARK DRIVE AUSTIN, TEXAS 78754
TBPE REGISTRATION NO. F-2408

carollo
TBPELS No. F-882

CITY OF AUSTIN
FOUNDED 1839

CITY OF AUSTIN

CITY OF AUSTIN
WILD HORSE RANCH WWTP EXPANSION
DEMOLITION
OPERATIONS BUILDING
DUCT BANK SECTIONS - DEMOLITION - 1

VERIFY SCALES
BAR IS ONE INCH ON ORIGINAL DRAWING
0 1"
IF NOT ONE INCH ON THIS SHEET, ADJUST SCALES ACCORDINGLY

JOB NO. 10976A.00
DRAWING NO. 80DE26
SHEET NO. 195 OF 464

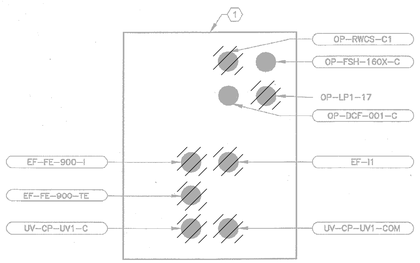

DUCT BANK SECTION A
SCALE: NTS

HE–12

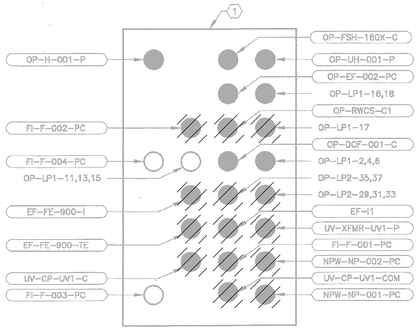

DUCT BANK SECTION B
SCALE: NTS

HE–12

DUCT BANK SECTION C
SCALE: NTS

HE–12, HE–22

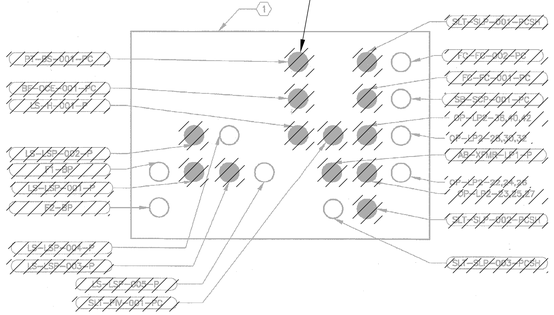

DUCT BANK SECTION D
SCALE: NTS

BE–32 , BE–33 , HE–12

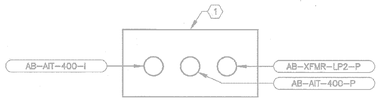

DUCT BANK SECTION E
SCALE: NTS

HE–12

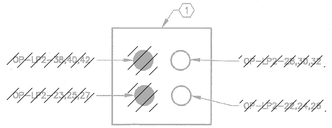

DUCT BANK SECTION F
SCALE: NTS

HE–12

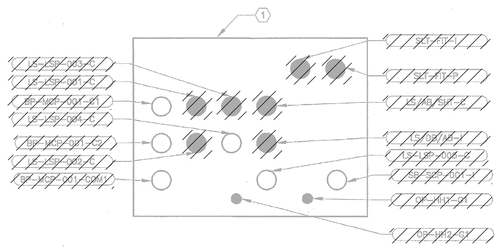

DUCT BANK SECTION G
SCALE: NTS

HE–12

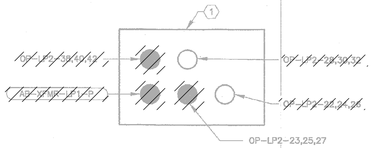

DUCT BANK SECTION H
SCALE: NTS

HE–12

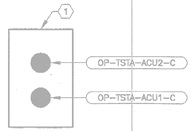

DUCT BANK SECTION I
SCALE: NTS

HE–12

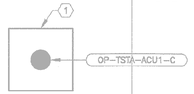

DUCT BANK SECTION J
SCALE: NTS

HE–12

CONDUIT/DUCT BANK SECTION DIMENSION TABLE

LEGEND:

NOTE: DIMENSIONS SHOWN ON TABLE ARE MAXIMUM DIMENSIONS IN INCHES.

TYPICAL CONDUIT/DUCT BANK SECTION

HORIZONTAL

VERTICAL

SECTION IDENTIFIER	HORIZONTAL (INCHES)	VERTICAL (INCHES)
A	30"	36"
B	30"	48"
C	42"	36"
D	48"	36"
E	24"	24"
F	24"	18"
G	12"	18"
H	24"	18"
I	12"	18"
J	12"	12"

NOTE: REFER TO "CONDUIT/DUCT BANK SECTION DIMENSION TABLE" ON THIS DRAWING FOR MAXIMUM DIMENSIONS OF THE CONDUIT/DUCT BANK SECTIONS ON THIS DRAWING.

KEY NOTES:

(1) SPACE AND ENCASE IN SAND PER THE DETAILS ON DRAWING NO. SE–8.

GENERAL NOTES:

1. EXTREME CARE MUST BE TAKEN FOR THE INSTALLATION OF THE ELECTRICAL DUCT BANKS SINCE THERE ARE NO AVAILABLE AS BUILT RECORDS OF PROFILES IDENTIFYING THE LOCATION AND INVERT ELEVATIONS OF EXISTING UNDERGROUND ELECTRICAL SYSTEM AND UNDERGROUND MECHANICAL PIPING. ROUTING OF NEW DUCT BANK SHOWN IS BASED ON SCHEMATIC KNOWLEDGE OF THE SIZE OF MECHANICAL PIPING AND THEIR APPROXIMATE SIZE AND/OR LOCATION. NO DATA IS AVAILABLE PERTAINING TO EXISTING UNDERGROUND ELECTRICAL DUCT BANK SYSTEM AND ITS COORDINATION WITH THE UNDERGROUND MECHANICAL SYSTEM. THEREFORE THE CONTRACTOR IS TO EXERCISE EXTREME CARE, VERIFY LOCATION/ROUTING/ELEVATION OF EXISTING UNDERGROUND UTILITIES PRIOR TO COMMENCING FULL SCALE INSTALLATION PROCESS OF THE PROPOSED DUCT BANK SYSTEM. FOLLOWING THE DISCOVERY VERIFICATION OF EXISTING UNDERGROUND UTILITIES, SHOULD ADJUSTMENT/MODIFICATIONS BECOME A NECESSITY TO EITHER THE EXISTING OR PROPOSED SYSTEM (AS APPLICABLE), THE EXISTING DISCOVERED FIELD CONDITIONS MUST BE BROUGHT TO THE ENGINEERS ATTENTION FOR EXECUTION OF THE NECESSARY ADJUSTMENTS/MODIFICATIONS.

REFERENCE DRAWINGS:

RE–33 – RE–34 – CONDUIT/WIRE SCHEDULE

RE–35 – RE–38 – PANEL SCHEDULES

KEY NOTES

1. DISCONNECT AND REMOVE CABLE/WIRE IN ITS ENTIRETY FROM CONDUIT IN DUCT BANK. CONDUIT SHALL REMAIN.

GENERAL NOTES:

1. REFER TO DEMOLITION PLAN DRAWINGS FOR ADDITIONAL INFORMATION.
2. REFER TO DEMOLITION PANEL SCHEDULES ON DRAWING NOS. [80DE10] - [80DE15] FOR CONDUIT/WIRE UNDERGROUND FROM THE PANELS TO THEIR DESTINATION. THE CIRCUIT NUMBERS SHOWN ON THE RECORD DRAWINGS MAY NOT REFLECT THE CURRENT INSTALLATION. CONTRACTOR SHALL FIELD VERIFY EXISTING CONDITIONS PRIOR TO COMMENCING MODIFICATION ACTIVITIES.

RECORD DRAWING

THIS CONSTRUCTION DOCUMENT WAS PREPARED USING INFORMATION SUPPLIED BY THE CONTRACTOR TO REPRESENT CONSTRUCTION CHANGES. THIS DOCUMENT IS FOR INFORMATION AND REFERENCE IN CONNECTION WITH THE OWNER'S USE AND OCCUPANCY OF THE PROJECT AND IS NOT INTENDED FOR BID, PERMIT OR CONSTRUCTION.

BY: K. A. Harutunian DATE: 1/5/2007

REUSE OF DOCUMENTS
This document and the ideas and designs incorporated herein as an instrument of professional service has been developed, designed and prepared by Harutunian Engineering, Inc. and is not to be used, in whole or part, for any other project without the written authorization of the City of Austin and Harutunian Engineering, Inc. © 2003

HARUTUNIAN ENGINEERING INCORPORATED
ENGINEERING AND ENVIRONMENTAL CONSULTANTS
309 EAST HUNTLAND DRIVE
SUITE 300
AUSTIN, TEXAS
78752

NO.	DATE	REVISION	APPROV.
4.			
3.			
2.			
1.			

WARNING
0 1/2
IF THIS BAR DOES NOT MEASURE 1" THEN DRAWING IS NOT TO SCALE

K. A. HARUTUNIAN 59181 REGISTERED PROFESSIONAL ENGINEER STATE OF TEXAS
10/11/2022

Dwg. No. HE–18

CITY OF AUSTIN, TEXAS
NORTHEAST INTERIM WASTEWATER TREATMENT PLANT

OPERATIONS BUILDING DUCT BANK SECTIONAL VIEWS (SHEET 2 OF 4)

Turner Collie & Braden Inc.
ENGINEERS • PLANNERS • PROJECT MANAGERS

Unit PUBLIC WORKS	Scale NONE	Date OCTOBER 2003	
Designed HEI	Checked HEI	Job No. 052–122094–0008	
Drawn HEI	Approved HEI	Sheet 201/327	

THIS CONFORMED DOCUMENT IS RELEASED FOR THE CONVENIENCE OF THE CONTRACTOR UNDER THE AUTHORITY OF:

K. A. Harutunian 11-01-22

K. A. HARUTUNIAN, P.E. DATE
TX LIC NO. 59181

SEE DISCLAIMER FOR LIMITATIONS OF USE.

CONTRACT DOCUMENTS DATED FEBRUARY 28, 2022, AS PART OF THE BIDDING DOCUMENTS (DRAWINGS AND SPECIFICATIONS) AND SUBSEQUENTLY ISSUED ADDENDA HAVE BEEN MERGED INTO ONE CONFORMING SET OF DOCUMENTS FOR THE CONVENIENCE OF THE CONTRACTOR. IF INCONSISTENCIES OR AMBIGUITIES BETWEEN "CONFORMED" DOCUMENTS AND CONTRACT DOCUMENTS ARE FOUND, THE CONTRACT DOCUMENTS SHALL GOVERN.

This document, and the designs incorporated herein, is an instrument of professional service that has been developed, designed and prepared by Harutunian Engineering, Inc., and is not to be used, in whole or in part, for any other project without giving written notice to Harutunian Engineering, Inc.

REV	DATE	BY	DESCRIPTION
			CONFORMED DOCUMENTS

DESIGNED HEI
DRAWN HEI
CHECKED HEI
DATE NOVEMBER 2022

** ORIGINAL SEALED BY K.A. HARUTUNIAN 02-28-22 TX PE 59181 **

HARUTUNIAN ENGINEERING INCORPORATED
ENGINEERING AND ENVIRONMENTAL CONSULTANTS
8100 CROSS PARK DRIVE
AUSTIN, TEXAS 78754
TBPE REGISTRATION NO. F-2408

carollo
TBPELS No. F-882

CITY OF AUSTIN FOUNDED 1839
CITY OF AUSTIN

CITY OF AUSTIN
WILD HORSE RANCH WWTP EXPANSION
DEMOLITION
OPERATIONS BUILDING
DUCT BANK SECTIONS - DEMOLITION - 2

VERIFY SCALES
BAR IS ONE INCH ON ORIGINAL DRAWING
0 1"
IF NOT ONE INCH ON THIS SHEET, ADJUST SCALES ACCORDINGLY

JOB NO. 10976A.00
DRAWING NO. 80DE27
SHEET NO. 196 OF 464

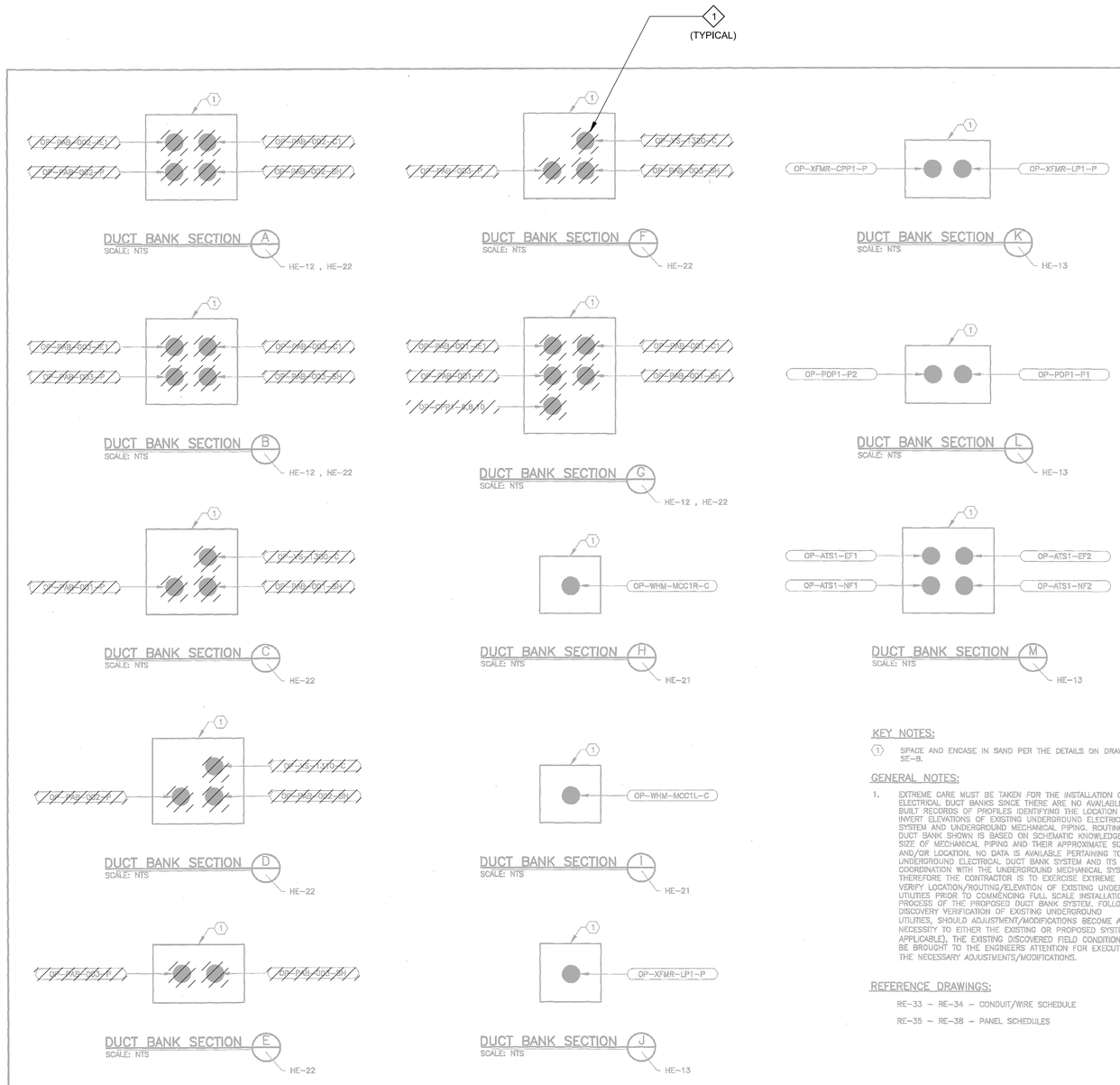

KEY NOTES:

1. SPACE AND ENCASE IN SAND PER THE DETAILS ON DRAWING NO. SE-8.

GENERAL NOTES:

1. EXTREME CARE MUST BE TAKEN FOR THE INSTALLATION OF THE ELECTRICAL DUCT BANKS SINCE THERE ARE NO AVAILABLE AS BUILT RECORDS OF PROFILES IDENTIFYING THE LOCATION AND INVERT ELEVATIONS OF EXISTING UNDERGROUND ELECTRICAL SYSTEM AND UNDERGROUND MECHANICAL PIPING. ROUTING OF NEW DUCT BANK SHOWN IS BASED ON SCHEMATIC KNOWLEDGE OF THE SIZE OF MECHANICAL PIPING AND THEIR APPROXIMATE SIZE AND/OR LOCATION. NO DATA IS AVAILABLE PERTAINING TO EXISTING UNDERGROUND ELECTRICAL DUCT BANK SYSTEM AND ITS COORDINATION WITH THE UNDERGROUND MECHANICAL SYSTEM. THEREFORE THE CONTRACTOR IS TO EXERCISE EXTREME CARE, VERIFY LOCATION/ROUTING/ELEVATION OF EXISTING UNDERGROUND UTILITIES PRIOR TO COMMENCING FULL SCALE INSTALLATION PROCESS OF THE PROPOSED DUCT BANK SYSTEM. FOLLOWING THE DISCOVERY VERIFICATION OF EXISTING UNDERGROUND UTILITIES, SHOULD ADJUSTMENT/MODIFICATIONS BECOME A NECESSITY TO EITHER THE EXISTING OR PROPOSED SYSTEM (AS APPLICABLE), THE EXISTING DISCOVERED FIELD CONDITIONS MUST BE BROUGHT TO THE ENGINEERS ATTENTION FOR EXECUTION OF THE NECESSARY ADJUSTMENTS/MODIFICATIONS.

REFERENCE DRAWINGS:

RE-33 – RE-34 – CONDUIT/WIRE SCHEDULE

RE-35 – RE-38 – PANEL SCHEDULES

CONDUIT/DUCT BANK SECTION DIMENSION TABLE

LEGEND:

NOTE: DIMENSIONS SHOWN ON TABLE ARE MAXIMUM DIMENSIONS IN INCHES.

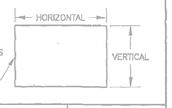

SECTION IDENTIFIER	HORIZONTAL (INCHES)	VERTICAL (INCHES)
A	18"	18"
B	18"	18"
C	18"	18"
D	18"	18"
E	18"	12"
F	18"	18"
G	18"	24"
H	12"	12"
I	12"	12"
J	12"	12"
K	18"	12"
L	18"	12"
M	18"	18"

NOTE: REFER TO "CONDUIT/DUCT BANK SECTION DIMENSION TABLE" ON THIS DRAWING FOR MAXIMUM DIMENSIONS OF THE CONDUIT/DUCT BANK SECTIONS ON THIS DRAWING.

RECORD DRAWING
THIS CONSTRUCTION DOCUMENT WAS PREPARED USING INFORMATION SUPPLIED BY THE CONTRACTOR TO REPRESENT CONSTRUCTION CHANGES. THIS DOCUMENT IS FOR INFORMATION AND REFERENCE IN CONNECTION WITH THE OWNER'S USE AND OCCUPANCY OF THE PROJECT AND IS NOT INTENDED FOR BID, PERMIT OR CONSTRUCTION.
BY: K.A. Harutunian DATE: 1/5/2007

REUSE OF DOCUMENTS
This document and the ideas and designs incorporated herein as an instrument of professional service has been developed, designed and prepared by Harutunian Engineering, Inc. and is not to be used, in whole or part, for any other project without the written authorization of the City of Austin and Harutunian Engineering, Inc. © 2003

HARUTUNIAN ENGINEERING INCORPORATED
ENGINEERING AND ENVIRONMENTAL CONSULTANTS
305 EAST HUNTLAND DRIVE
SUITE 300
AUSTIN, TEXAS
78752

NO.	DATE	REVISION	APPROV.
4			
3			
2			
1			

WARNING
0 1/2 1
IF THIS BAR DOES NOT MEASURE 1" THEN DRAWING IS NOT TO SCALE

K. A. HARUTUNIAN 59181 REGISTERED PROFESSIONAL ENGINEER STATE OF TEXAS
10/18/2003

CITY OF AUSTIN, TEXAS
NORTHEAST INTERIM WASTEWATER TREATMENT PLANT

OPERATIONS BUILDING DUCT BANK SECTIONAL VIEWS (SHEET 3 OF 4)

Turner Collie & Braden Inc.
ENGINEERS • PLANNERS • PROJECT MANAGERS

Unit PUBLIC WORKS	Scale NONE	Date OCTOBER 2003	
Designed HEI	Checked HEI	Job No. 052-122094-0008	
Drawn HEI	Approved HEI	Sheet 202/327	
Dwg. No. HE-19			

THIS CONFORMED DOCUMENT IS RELEASED FOR THE CONVENIENCE OF THE CONTRACTOR UNDER THE AUTHORITY OF:

K. A. Harutunian — 11-01-22

K. A. HARUTUNIAN, P.E. — DATE
TX LIC NO. 59181

SEE DISCLAIMER FOR LIMITATIONS OF USE.

CONTRACT DOCUMENTS DATED FEBRUARY 28, 2022, AS PART OF THE BIDDING DOCUMENTS (DRAWINGS AND SPECIFICATIONS) AND SUBSEQUENTLY ISSUED ADDENDA HAVE BEEN MERGED INTO ONE CONFORMING SET OF DOCUMENTS FOR THE CONVENIENCE OF THE CONTRACTOR. IF INCONSISTENCIES OR AMBIGUITIES BETWEEN "CONFORMED" DOCUMENTS AND CONTRACT DOCUMENTS ARE FOUND, THE CONTRACT DOCUMENTS SHALL GOVERN.

This document, and the designs incorporated herein, is an instrument of professional service that has been developed, designed and prepared by Harutunian Engineering, Inc., and is not to be used, in whole or in part, for any other project without giving written notice to Harutunian Engineering, Inc.

REV	DATE	BY	DESCRIPTION
			CONFORMED DOCUMENTS

DESIGNED HEI
DRAWN HEI
CHECKED HEI
DATE NOVEMBER 2022

** ORIGINAL SEALED BY K.A. HARUTUNIAN 02-28-22 TX PE 59181 **

HARUTUNIAN ENGINEERING INCORPORATED
ENGINEERING AND ENVIRONMENTAL CONSULTANTS
8100 CROSS PARK DRIVE
AUSTIN, TEXAS 78754
TBPE REGISTRATION NO. F-2408

carollo
TBPELS No. F-882

CITY OF AUSTIN
FOUNDED 1839

CITY OF AUSTIN

CITY OF AUSTIN
WILD HORSE RANCH WWTP EXPANSION
DEMOLITION
OPERATIONS BUILDING
DUCT BANK SECTIONS - DEMOLITION - 3

VERIFY SCALES
BAR IS ONE INCH ON ORIGINAL DRAWING
0 1"
IF NOT ONE INCH ON THIS SHEET, ADJUST SCALES ACCORDINGLY

JOB NO. 10976A.00
DRAWING NO. 80DE28
SHEET NO. 197 OF 464

KEY NOTES

1. DISCONNECT AND REMOVE CABLE/WIRE IN ITS ENTIRETY FROM CONDUIT IN DUCT BANK. CONDUIT SHALL REMAIN.

GENERAL NOTES:

1. REFER TO DEMOLITION PLAN DRAWINGS FOR ADDITIONAL INFORMATION.
2. REFER TO DEMOLITION PANEL SCHEDULES ON DRAWING NOS. [80DE10] - [80DE15] FOR CONDUIT/WIRE UNDERGROUND FROM THE PANELS TO THEIR DESTINATION. THE CIRCUIT NUMBERS SHOWN ON THE RECORD DRAWINGS MAY NOT REFLECT THE CURRENT INSTALLATION. CONTRACTOR SHALL FIELD VERIFY EXISTING CONDITIONS PRIOR TO COMMENCING MODIFICATION ACTIVITIES.

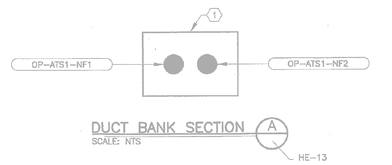

DUCT BANK SECTION A
SCALE: NTS
HE-13

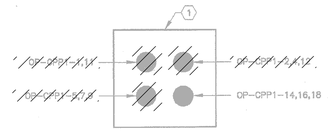

DUCT BANK SECTION B
SCALE: NTS
HE-13

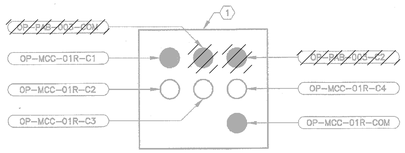

DUCT BANK SECTION C
SCALE: NTS
HE-13

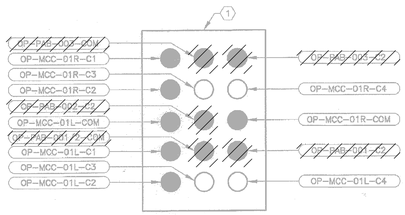

DUCT BANK SECTION D
SCALE: NTS
HE-13

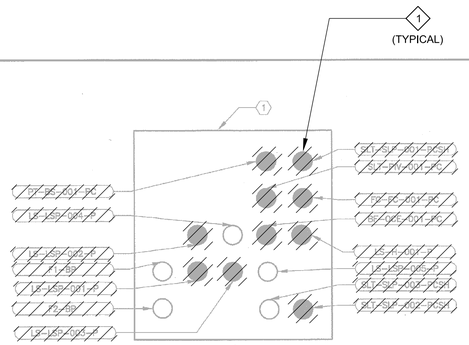

DUCT BANK SECTION E
SCALE: NTS
HE-12

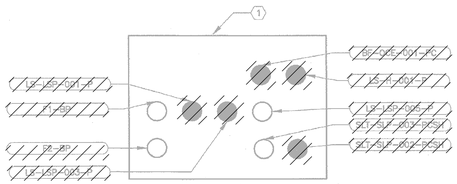

DUCT BANK SECTION F
SCALE: NTS
HE-12

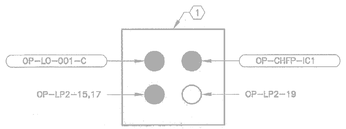

DUCT BANK SECTION G
SCALE: NTS
HE-12 , HE-23

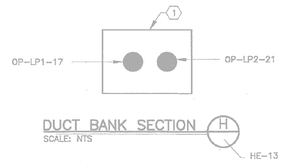

DUCT BANK SECTION H
SCALE: NTS
HE-13

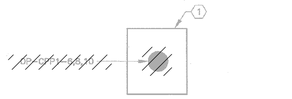

DUCT BANK SECTION I
SCALE: NTS
HE-12

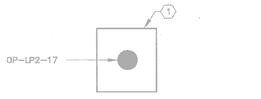

DUCT BANK SECTION J
SCALE: NTS
HE-13

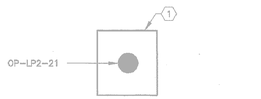

DUCT BANK SECTION K
SCALE: NTS
HE-13

KEY NOTES:

(1) SPACE AND ENCASE IN SAND PER THE DETAILS ON DRAWING NO. SE-8.

GENERAL NOTES:

1. EXTREME CARE MUST BE TAKEN FOR THE INSTALLATION OF THE ELECTRICAL DUCT BANKS SINCE THERE ARE NO AVAILABLE AS BUILT RECORDS OF PROFILES IDENTIFYING THE LOCATION AND INVERT ELEVATIONS OF EXISTING UNDERGROUND ELECTRICAL SYSTEM AND UNDERGROUND MECHANICAL PIPING. ROUTING OF NEW DUCT BANK SHOWN IS BASED ON SCHEMATIC KNOWLEDGE OF THE SIZE OF MECHANICAL PIPING AND THEIR APPROXIMATE SIZE AND/OR LOCATION. NO DATA IS AVAILABLE PERTAINING TO EXISTING UNDERGROUND ELECTRICAL DUCT BANK SYSTEM AND ITS COORDINATION WITH THE UNDERGROUND MECHANICAL SYSTEM. THEREFORE THE CONTRACTOR IS TO EXERCISE EXTREME CARE, VERIFY LOCATION/ROUTING/ELEVATION OF EXISTING UNDERGROUND UTILITIES PRIOR TO COMMENCING FULL SCALE INSTALLATION PROCESS OF THE PROPOSED DUCT BANK SYSTEM. FOLLOWING THE DISCOVERY VERIFICATION OF EXISTING UNDERGROUND UTILITIES, SHOULD ADJUSTMENT/MODIFICATIONS BECOME A NECESSITY TO EITHER THE EXISTING OR PROPOSED SYSTEM (AS APPLICABLE), THE EXISTING DISCOVERED FIELD CONDITIONS MUST BE BROUGHT TO THE ENGINEERS ATTENTION FOR EXECUTION OF THE NECESSARY ADJUSTMENTS/MODIFICATIONS.

REFERENCE DRAWINGS:

RE-33 – RE-34 – CONDUIT/WIRE SCHEDULE

RE-35 – RE-38 – PANEL SCHEDULES

CONDUIT/DUCT BANK SECTION DIMENSION TABLE

LEGEND:

NOTE: DIMENSIONS SHOWN ON TABLE ARE MAXIMUM DIMENSIONS IN INCHES.

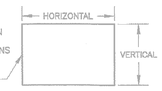

TYPICAL CONDUIT/DUCT BANK SECTION

SECTION IDENTIFIER	HORIZONTAL (INCHES)	VERTICAL (INCHES)
A	18"	12"
B	18"	18"
C	24"	24"
D	24"	36"
E	36"	36"
F	36"	24"
G	18"	18"
H	12"	18"
I	12"	12"
J	12"	12"
K	12"	12"

NOTE: REFER TO "CONDUIT/DUCT BANK SECTION DIMENSION TABLE" ON THIS DRAWING FOR MAXIMUM DIMENSIONS OF THE CONDUIT/DUCT BANK SECTIONS ON THIS DRAWING.

RECORD DRAWING
THIS CONSTRUCTION DOCUMENT WAS PREPARED USING INFORMATION SUPPLIED BY THE CONTRACTOR TO REPRESENT CONSTRUCTION CHANGES. THIS DOCUMENT IS FOR INFORMATION AND REFERENCE IN CONNECTION WITH THE OWNER'S USE AND OCCUPANCY OF THE PROJECT AND IS NOT INTENDED FOR BID, PERMIT OR CONSTRUCTION.
BY: K.A. Harutunian DATE: 1/6/2007

REUSE OF DOCUMENTS
This document and the ideas and designs incorporated herein as an instrument of professional service has been developed, designed and prepared by Harutunian Engineering, Inc. and is not to be used, in whole or part, for any other project without the written authorization of the City of Austin and Harutunian Engineering, Inc. © 2003

HARUTUNIAN ENGINEERING INCORPORATED
ENGINEERING AND ENVIRONMENTAL CONSULTANTS
305 EAST HUNTLAND DRIVE, SUITE 500, AUSTIN, TEXAS 78752

NO.	DATE	REVISION	APPROV.
4			
3			
2			
1			

WARNING
0 1/2 1
IF THIS BAR DOES NOT MEASURE 1" THEN DRAWING IS NOT TO SCALE

K. A. HARUTUNIAN 59181 STATE OF TEXAS REGISTERED PROFESSIONAL ENGINEER
10/11/2003

Dwg. No. HE-20

CITY OF AUSTIN, TEXAS
NORTHEAST INTERIM WASTEWATER TREATMENT PLANT

OPERATIONS BUILDING DUCT BANK SECTIONAL VIEWS (SHEET 4 OF 4)

Turner Collie & Braden Inc.
ENGINEERS • PLANNERS • PROJECT MANAGERS

Unit PUBLIC WORKS	Scale NONE	Date OCTOBER 2003	
Designed HEI	Checked HEI	Job No. 052-122094-0008	
Drawn HEI	Approved HEI	Sheet 203/327	

KEY NOTES

1. DISCONNECT AND REMOVE CABLE/WIRE IN ITS ENTIRETY FROM CONDUIT IN DUCT BANK. CONDUIT SHALL REMAIN.

GENERAL NOTES:

1. REFER TO DEMOLITION PLAN DRAWINGS FOR ADDITIONAL INFORMATION.
2. REFER TO DEMOLITION PANEL SCHEDULES ON DRAWING NOS. [80DE10] - [80DE15] FOR CONDUIT/WIRE UNDERGROUND FROM THE PANELS TO THEIR DESTINATION. THE CIRCUIT NUMBERS SHOWN ON THE RECORD DRAWINGS MAY NOT REFLECT THE CURRENT INSTALLATION. CONTRACTOR SHALL FIELD VERIFY EXISTING CONDITIONS PRIOR TO COMMENCING MODIFICATION ACTIVITIES.

THIS CONFORMED DOCUMENT IS RELEASED FOR THE CONVENIENCE OF THE CONTRACTOR UNDER THE AUTHORITY OF:

K. A. Harutunian — 11-01-22
K. A. HARUTUNIAN, P.E. — DATE
TX LIC NO. 59181

SEE DISCLAIMER FOR LIMITATIONS OF USE.

CONTRACT DOCUMENTS DATED FEBRUARY 28, 2022, AS PART OF THE BIDDING DOCUMENTS (DRAWINGS AND SPECIFICATIONS) AND SUBSEQUENTLY ISSUED ADDENDA HAVE BEEN MERGED INTO ONE CONFORMING SET OF DOCUMENTS FOR THE CONVENIENCE OF THE CONTRACTOR. IF INCONSISTENCIES OR AMBIGUITIES BETWEEN "CONFORMED" DOCUMENTS AND CONTRACT DOCUMENTS ARE FOUND, THE CONTRACT DOCUMENTS SHALL GOVERN.

This document, and the designs incorporated herein, is an instrument of professional service that has been developed, designed and prepared by Harutunian Engineering, Inc., and is not to be used, in whole or in part, for any other project without giving written notice to Harutunian Engineering, Inc.

REV	DATE	BY	DESCRIPTION
			CONFORMED DOCUMENTS

DESIGNED HEI
DRAWN HEI
CHECKED HEI
DATE NOVEMBER 2022

** ORIGINAL SEALED BY K.A. HARUTUNIAN 02-28-22 TX PE 59181 **

HARUTUNIAN ENGINEERING INCORPORATED
ENGINEERING AND ENVIRONMENTAL CONSULTANTS
8100 CROSS PARK DRIVE, AUSTIN, TEXAS 78754
TBPE REGISTRATION NO. F-2408

carollo® TBPELS No. F-882

CITY OF AUSTIN FOUNDED 1839 — CITY OF AUSTIN

CITY OF AUSTIN
WILD HORSE RANCH WWTP EXPANSION
DEMOLITION
OPERATIONS BUILDING
DUCT BANK SECTIONS - DEMOLITION - 4

VERIFY SCALES
BAR IS ONE INCH ON ORIGINAL DRAWING
0 1"
IF NOT ONE INCH ON THIS SHEET, ADJUST SCALES ACCORDINGLY

JOB NO. 10976A.00
DRAWING NO. 80DE29
SHEET NO. 198 OF 464

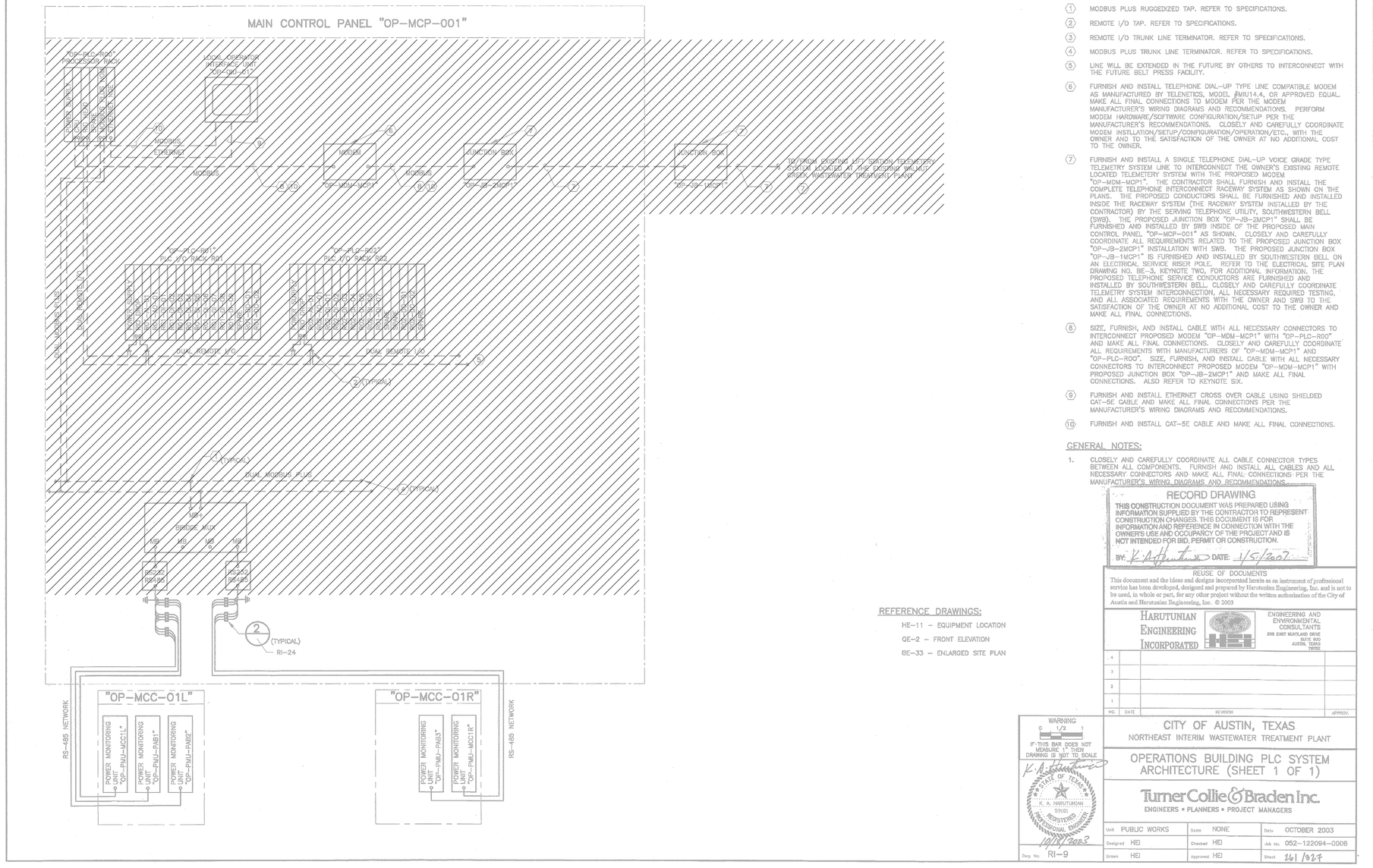

KEY NOTES:

1. MODBUS PLUS RUGGEDIZED TAP. REFER TO SPECIFICATIONS.
2. REMOTE I/O TAP. REFER TO SPECIFICATIONS.
3. REMOTE I/O TRUNK LINE TERMINATOR. REFER TO SPECIFICATIONS.
4. MODBUS PLUS TRUNK LINE TERMINATOR. REFER TO SPECIFICATIONS.
5. LINE WILL BE EXTENDED IN THE FUTURE BY OTHERS TO INTERCONNECT WITH THE FUTURE BELT PRESS FACILITY.
6. FURNISH AND INSTALL TELEPHONE DIAL-UP TYPE LINE COMPATIBLE MODEM AS MANUFACTURED BY TELENETICS, MODEL #MIU14.4, OR APPROVED EQUAL. MAKE ALL FINAL CONNECTIONS TO MODEM PER THE MODEM MANUFACTURER'S WIRING DIAGRAMS AND RECOMMENDATIONS. PERFORM MODEM HARDWARE/SOFTWARE CONFIGURATION/SETUP PER THE MANUFACTURER'S RECOMMENDATIONS. CLOSELY AND CAREFULLY COORDINATE MODEM INSTLLATION/SETUP/CONFIGURATION/OPERATION/ETC., WITH THE OWNER AND TO THE SATISFACTION OF THE OWNER AT NO ADDITIONAL COST TO THE OWNER.
7. FURNISH AND INSTALL A SINGLE TELEPHONE DIAL-UP VOICE GRADE TYPE TELEMETRY SYSTEM LINE TO INTERCONNECT THE OWNER'S EXISTING REMOTE LOCATED TELEMETERY SYSTEM WITH THE PROPOSED MODEM "OP-MDM-MCP1". THE CONTRACTOR SHALL FURNISH AND INSTALL THE COMPLETE TELEPHONE INTERCONNECT RACEWAY SYSTEM AS SHOWN ON THE PLANS. THE PROPOSED CONDUCTORS SHALL BE FURNISHED AND INSTALLED INSIDE THE RACEWAY SYSTEM (THE RACEWAY SYSTEM INSTALLED BY THE CONTRACTOR) BY THE SERVING TELEPHONE UTILITY, SOUTHWESTERN BELL (SWB). THE PROPOSED JUNCTION BOX "OP-JB-2MCP1" SHALL BE FURNISHED AND INSTALLED BY SWB INSIDE OF THE PROPOSED MAIN CONTROL PANEL "OP-MCP-001" AS SHOWN. CLOSELY AND CAREFULLY COORDINATE ALL REQUIREMENTS RELATED TO THE PROPOSED JUNCTION BOX "OP-JB-2MCP1" INSTALLATION WITH SWB. THE PROPOSED JUNCTION BOX "OP-JB-1MCP1" IS FURNISHED AND INSTALLED BY SOUTHWESTERN BELL ON AN ELECTRICAL SERVICE RISER POLE. REFER TO THE ELECTRICAL SITE PLAN DRAWING NO. BE-3, KEYNOTE TWO, FOR ADDITIONAL INFORMATION. THE PROPOSED TELEPHONE SERVICE CONDUCTORS ARE FURNISHED AND INSTALLED BY SOUTHWESTERN BELL. CLOSELY AND CAREFULLY COORDINATE TELEMETRY SYSTEM INTERCONNECTION, ALL NECESSARY REQUIRED TESTING, AND ALL ASSOCIATED REQUIREMENTS WITH THE OWNER AND SWB TO THE SATISFACTION OF THE OWNER AT NO ADDITIONAL COST TO THE OWNER AND MAKE ALL FINAL CONNECTIONS.
8. SIZE, FURNISH, AND INSTALL CABLE WITH ALL NECESSARY CONNECTORS TO INTERCONNECT PROPOSED MODEM "OP-MDM-MCP1" WITH "OP-PLC-R00" AND MAKE ALL FINAL CONNECTIONS. CLOSELY AND CAREFULLY COORDINATE ALL REQUIREMENTS WITH MANUFACTURERS OF "OP-MDM-MCP1" AND "OP-PLC-R00". SIZE, FURNISH, AND INSTALL CABLE WITH ALL NECESSARY CONNECTORS TO INTERCONNECT PROPOSED MODEM "OP-MDM-MCP1" WITH PROPOSED JUNCTION BOX "OP-JB-2MCP1" AND MAKE ALL FINAL CONNECTIONS. ALSO REFER TO KEYNOTE SIX.
9. FURNISH AND INSTALL ETHERNET CROSS OVER CABLE USING SHIELDED CAT-5E CABLE AND MAKE ALL FINAL CONNECTIONS PER THE MANUFACTURER'S WIRING DIAGRAMS AND RECOMMENDATIONS.
10. FURNISH AND INSTALL CAT-5E CABLE AND MAKE ALL FINAL CONNECTIONS.

GENERAL NOTES:

1. CLOSELY AND CAREFULLY COORDINATE ALL CABLE CONNECTOR TYPES BETWEEN ALL COMPONENTS. FURNISH AND INSTALL ALL CABLES AND ALL NECESSARY CONNECTORS AND MAKE ALL FINAL CONNECTIONS PER THE MANUFACTURER'S WIRING DIAGRAMS AND RECOMMENDATIONS.

REFERENCE DRAWINGS:

HE-11 – EQUIPMENT LOCATION
QE-2 – FRONT ELEVATION
BE-33 – ENLARGED SITE PLAN

RECORD DRAWING
THIS CONSTRUCTION DOCUMENT WAS PREPARED USING INFORMATION SUPPLIED BY THE CONTRACTOR TO REPRESENT CONSTRUCTION CHANGES. THIS DOCUMENT IS FOR INFORMATION AND REFERENCE IN CONNECTION WITH THE OWNER'S USE AND OCCUPANCY OF THE PROJECT AND IS NOT INTENDED FOR BID, PERMIT OR CONSTRUCTION.
BY: K. A. Harutunian DATE: 1/5/2007

REUSE OF DOCUMENTS
This document and the ideas and designs incorporated herein as an instrument of professional service has been developed, designed and prepared by Harutunian Engineering, Inc. and is not to be used, in whole or part, for any other project without the written authorization of the City of Austin and Harutunian Engineering, Inc. © 2003

HARUTUNIAN ENGINEERING INCORPORATED
ENGINEERING AND ENVIRONMENTAL CONSULTANTS
305 EAST HUNTLAND DRIVE SUITE 300 AUSTIN, TEXAS 78752

NO.	DATE	REVISION	APPROV.
4			
3			
2			
1			

WARNING
0 1/2 1
IF THIS BAR DOES NOT MEASURE 1" THEN DRAWING IS NOT TO SCALE

K. A. HARUTUNIAN 59181 STATE OF TEXAS REGISTERED PROFESSIONAL ENGINEER 10/18/2003

Dwg. No. RI-9

CITY OF AUSTIN, TEXAS
NORTHEAST INTERIM WASTEWATER TREATMENT PLANT
OPERATIONS BUILDING PLC SYSTEM ARCHITECTURE (SHEET 1 OF 1)
Turner Collie & Braden Inc.
ENGINEERS • PLANNERS • PROJECT MANAGERS

Unit PUBLIC WORKS	Scale NONE	Date OCTOBER 2003	
Designed HEI	Checked HEI	Job No. 052-122094-0008	
Drawn HEI	Approved HEI	Sheet 261 of 274	

GENERAL NOTES:

1. DISCONNECT AND REMOVE PROGRAMMABLE LOGIC CONTROLLER, OPERATOR INTERFACE UNIT, BRIDGE MUX, AND ALL ASSOCIATED WIRING, TERMINAL BLOCKS, ETC. REFER TO WIRING SCHEMATICS FOR ADDITIONAL INFORMATION.
2. ALTHOUGH NOT SHOWN HERE, CURSORY FIELD INVESTIGATIONS IDENTIFIED A CELLULAR ROUTER AND ANTENNA PRESENT. THE ROUTER AND ANTENNA ARE TO REMAIN AND BE RETURNED TO WORKING ORDER DURING THE RENOVATION ACTIVITIES. TAKE CAREFUL FIELD NOTES WHEN DEMOLISHING THE INTERNAL EQUIPMENT TO THE CONTROL PANEL TO AID IN RECONNECTING THE ROUTER AND ANTENNA DURING RENOVATION ACTIVITIES.

THIS CONFORMED DOCUMENT IS RELEASED FOR THE CONVENIENCE OF THE CONTRACTOR UNDER THE AUTHORITY OF:

K. A. Harutunian 11-01-22
K. A. HARUTUNIAN, P.E. DATE
TX LIC NO. 59181

SEE DISCLAIMER FOR LIMITATIONS OF USE.

CONTRACT DOCUMENTS DATED FEBRUARY 28, 2022, AS PART OF THE BIDDING DOCUMENTS (DRAWINGS AND SPECIFICATIONS) AND SUBSEQUENTLY ISSUED ADDENDA HAVE BEEN MERGED INTO ONE CONFORMING SET OF DOCUMENTS FOR THE CONVENIENCE OF THE CONTRACTOR. IF INCONSISTENCIES OR AMBIGUITIES BETWEEN "CONFORMED" DOCUMENTS AND CONTRACT DOCUMENTS ARE FOUND, THE CONTRACT DOCUMENTS SHALL GOVERN.

This document, and the designs incorporated herein, is an instrument of professional service that has been developed, designed and prepared by Harutunian Engineering, Inc., and is not to be used, in whole or in part, for any other project without giving written notice to Harutunian Engineering, Inc.

REV	DATE	BY	DESCRIPTION
			CONFORMED DOCUMENTS

DESIGNED HEI
DRAWN HEI
CHECKED HEI
DATE NOVEMBER 2022

** ORIGINAL SEALED BY K.A. HARUTUNIAN 02-28-22 TX PE 59181 **

HARUTUNIAN ENGINEERING INCORPORATED
ENGINEERING AND ENVIRONMENTAL CONSULTANTS
8100 CROSS PARK DRIVE AUSTIN, TEXAS 78754
TBPE REGISTRATION NO. F-2408

carollo
TBPELS No. F-882

CITY OF AUSTIN
FOUNDED 1839
CITY OF AUSTIN

CITY OF AUSTIN
WILD HORSE RANCH WWTP EXPANSION
DEMOLITION
NETWORK ARCHITECTURE DEMOLITION

VERIFY SCALES
BAR IS ONE INCH ON ORIGINAL DRAWING
0 1"
IF NOT ONE INCH ON THIS SHEET, ADJUST SCALES ACCORDINGLY

JOB NO. 10976A.00
DRAWING NO. 80DN01
SHEET NO. 199 OF 464

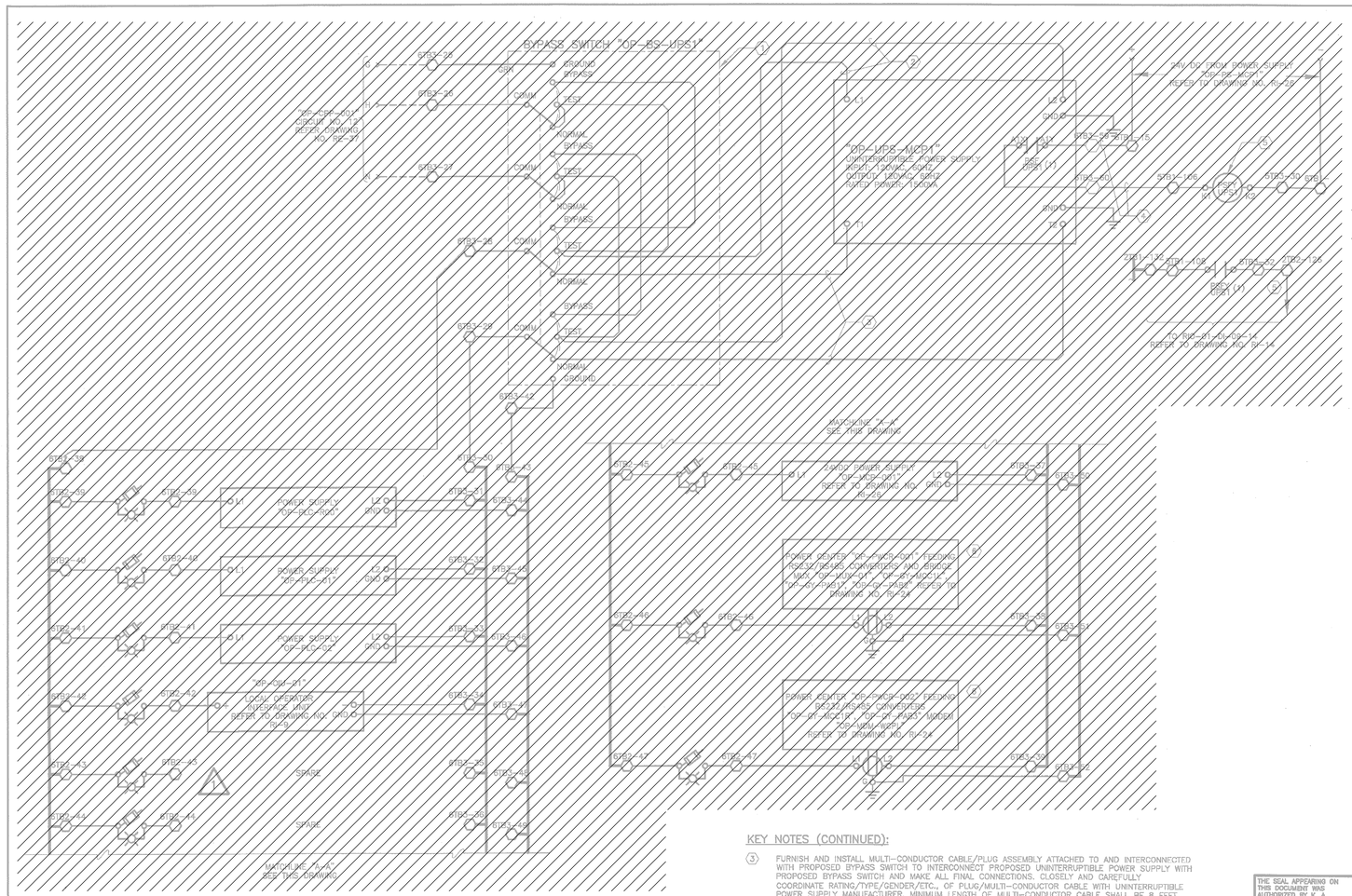
BYPASS SWITCH "OP-BS-UPS1"
"OP-UPS-MCP1"
UNINTERRUPTIBLE POWER SUPPLY
INPUT: 120VAC, 60HZ
OUTPUT: 120VAC, 60HZ
RATED POWER: 1500VA
"OP-CPC-001" CIRCUIT NO. 11 REFER TO DRAWING NO. RE-37
"OP-PLC-001" LOCAL OPERATOR INTERFACE UNIT REFER TO DRAWING NO. RI-23
"OP-PLC-002" REFER TO DRAWING NO. RI-23
"OP-PLC-003" REFER TO DRAWING NO. RI-23
"OP-PWR-001" REFER TO DRAWING NO. RI-24
"OP-PWR-002" FEEDING RS232/RS485 CONVERTERS AND BRIDGE MUX, "OP-MUX-01" "OP-PT-MUX01" "OP-PT-MUX02" "OP-PT-MUX03" REFER TO DRAWING NO. RI-24
"OP-PWR-003" FEEDING RS232/RS485 CONVERTERS AND BRIDGE MUX, "OP-MUX-01" "OP-PT-MUX01" "OP-PT-MUX02" "OP-PT-MUX03" REFER TO DRAWING NO. RI-24
MATCHLINE "A-A" SEE THIS DRAWING
MATCHLINE "A-A" SEE THIS DRAWING
SPARE
SPARE
SPARE
SPARE
POWER SUPPLY "OP-PLC-001"
POWER SUPPLY "OP-PLC-002"
POWER SUPPLY "OP-PLC-003"
24VDC POWER SUPPLY "OP-MCP-001" REFER TO DRAWING NO. RI-24
24VDC POWER SUPPLY "OP-MCP-001" REFER TO DRAWING NO. RI-24
24V DC FROM POWER SUPPLY "OP-PS-MCP1" REFER TO DRAWING NO. RI-24
TO RI-21 OF OP-1 REFER TO DRAWING NO. RI-14
PBPX (1)
PBPX (1)
PBPX (1)

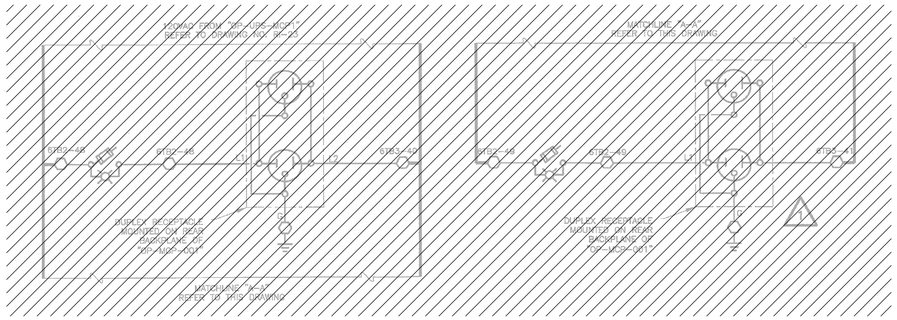

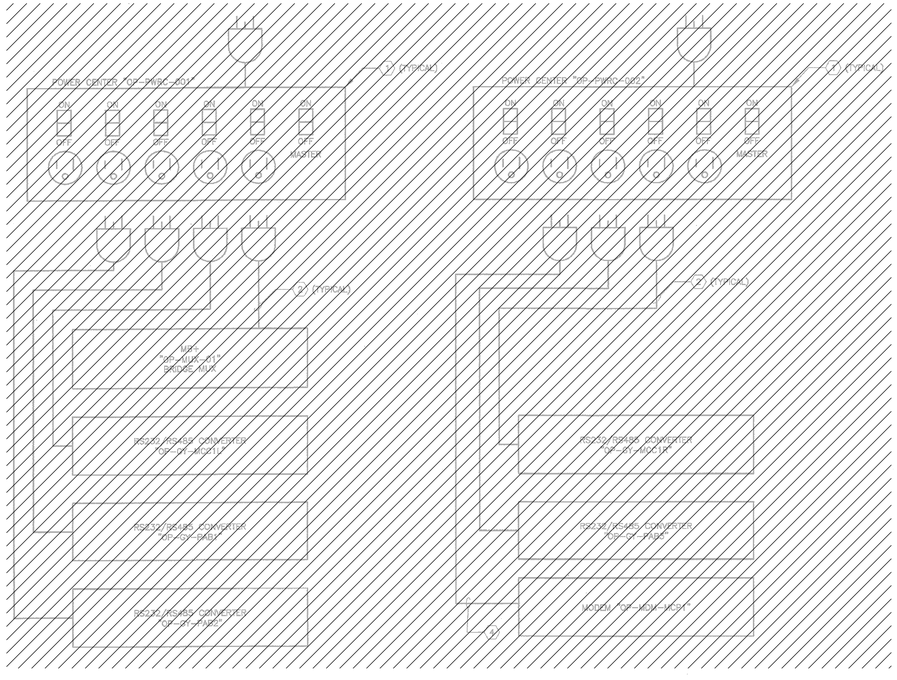

CONTROL PANEL "OP-MCP-001"
RS-232/RS485 CONVERTER AND BRIDGE MUX
POWER WIRING SCHEMATIC
SCALE: NTS

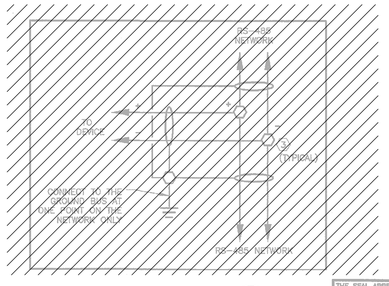

DETAIL 1/RI-8
SCALE: NTS

WIRING AND TERMINAL DEVICE LEGEND:

- ○ DEVICE WIRING TERMINAL
- ⬡ TERMINAL BLOCK LOCATED IN CONTROL PANEL "OP-MCP-001". ANY DEVICE SHOWN WITH DEVICE WIRING TERMINALS CONNECTED DIRECTLY TO THESE SYMBOLS WITH SOLID LINES IS ALSO LOCATED IN "OP-MCP-001".
- □ TERMINAL BLOCK LOCATED IN 480 VOLT MOTOR CONTROL CENTER "OP-MCC-01L" OR "OP-MCC-01R" AS APPLICABLE. ANY DEVICE SHOWN WITH DEVICE WIRING TERMINALS CONNECTED DIRECTLY TO THESE SYMBOLS WITH SOLID LINES IS ALSO LOCATED IN "OP-MCC-01L" OR "OP-MCC-01R" AS APPLICABLE.
- △ TERMINAL BLOCK LOCATED IN FIELD MOUNTED EQUIPMENT AS NOTED. ANY DEVICE SHOWN WITH DEVICE WIRING TERMINALS CONNECTED DIRECTLY TO THESE SYMBOLS WITH SOLID LINES IS LOCATED IN OR ON THE EQUIPMENT.
- — — FIELD WIRING

KEY NOTES:

1. SURGE PROTECTOR POWER CENTER MOUNTED ON SECTION SLIDE OUT SHELF INSIDE OF APPLICABLE CONTROL PANEL. REFER TO APPLICABLE CONTROL PANEL INTERIOR FRONT ELEVATIONS AND KEYNOTE 1 ON DRAWING NO. QE-4 FOR ADDITIONAL INFORMATION.
2. CORD AND PLUG ASSEMBLY PROVIDED BY MANUFACTURER OF EQUIPMENT. CLOSELY AND CAREFULLY COORDINATE LENGTH OF CABLE WITH LOCATION/ROUTE INSIDE OF PROPOSED CONTROL PANEL.
3. TERMINAL BLOCK IS LOCATED ON SLIDE-OUT SHELF FOR RESPECTIVE CONVERTER INSIDE OF "OP-MCP-001".
4. FURNISH AND INSTALL SO TYPE CABLE, CORD AND PLUG ASSEMBLY TO INTERCONNECT EQUIPMENT. CLOSELY AND CAREFULLY COORDINATE ALL CONNECTOR TYPES, LENGTH OF CABLE WITH LOCATION/ROUTE INSIDE OF PROPOSED CONTROL PANEL, AND MAKE ALL FINAL CONNECTIONS. THE CONTRACTOR SHALL SIZE THE PROPOSED CABLE PER THE REQUIREMENTS OF THE SPECIFICATIONS AND THE NATIONAL ELECTRIC CODE (N.E.C.).

GENERAL NOTES:

1. CLOSELY AND CAREFULLY COORDINATE/VERIFY ALL POINTS OF CONNECTION PRIOR TO COMMENCING INSTALLATION/MODIFICATION ACTIVITIES.

REFERENCE DRAWINGS:

RE-37 – PANEL SCHEDULE "OP-CPP-001"

RECORD DRAWING

THIS CONSTRUCTION DOCUMENT WAS PREPARED USING INFORMATION SUPPLIED BY THE CONTRACTOR TO REPRESENT CONSTRUCTION CHANGES. THIS DOCUMENT IS FOR INFORMATION AND REFERENCE IN CONNECTION WITH THE OWNER'S USE AND OCCUPANCY OF THE PROJECT AND IS NOT INTENDED FOR BID, PERMIT OR CONSTRUCTION.

BY: K.A. Harutunian DATE: 1/5/2007

REUSE OF DOCUMENTS
This document and the ideas and designs incorporated herein as an instrument of professional service has been developed, designed and prepared by Harutunian Engineering, Inc. and is not to be used, in whole or part, for any other project without the written authorization of the City of Austin and Harutunian Engineering, Inc. © 2003

HARUTUNIAN ENGINEERING INCORPORATED
ENGINEERING AND ENVIRONMENTAL CONSULTANTS
305 EAST HANDLING DRIVE
SUITE 600
AUSTIN, TEXAS
78701

NO.	DATE	REVISION	
4			
3			
2			
1	1/5/7	RECORD DRAWING	K.A.H.

THE SEAL APPEARING ON THIS DOCUMENT WAS AUTHORIZED BY K. A. HARUTUNIAN, P.E. 59181 ON OCTOBER 16, 2003

WARNING
0 1/2 1
IF THIS BAR DOES NOT MEASURE 1" THEN DRAWING IS NOT TO SCALE

STATE OF TEXAS
K. A. HARUTUNIAN
59181
REGISTERED
PROFESSIONAL ENGINEER

Dwg. No. RI-24

CITY OF AUSTIN, TEXAS
NORTHEAST INTERIM WASTEWATER TREATMENT PLANT

OPERATIONS BUILDING INSTRUMENT POWER WIRING SCHEMATICS (SHEET 2 OF 5)

Turner Collie & Braden Inc.
ENGINEERS • PLANNERS • PROJECT MANAGERS

Unit PUBLIC WORKS	Scale NONE	Date OCTOBER 2003	
Designed HEI	Checked HEI	Job No. 052-122094-0008	
Drawn HEI	Approved HEI	Sheet 276/327	

GENERAL NOTES:

1. DISCONNECT AND REMOVE THE EXISTING MAIN CONTROL PANEL INSTRUMENTATION AND CONTROL EQUIPMENT (I.E. POWER SUPPLY, PLC, BREAKERS, TERMINAL BLOCKS, INTERCONNECT WIRING, CONTROL DEVICES, ETC.) IN THEIR ENTIRETY. REFER TO WIRING SCHEMATICS, NETWORK ARCHITECTURE, ETC. FOR ADDITIONAL REQUIREMENTS AND INFORMATION.
2. DISCONNECT AND REMOVE EXISTING FIELD WIRING AND ASSOCIATED FIELD EQUIPMENT IN THEIR ENTIRETY. REFER TO PLAN DRAWINGS FOR ADDITIONAL INFORMATION.

THIS CONFORMED DOCUMENT IS RELEASED FOR THE CONVENIENCE OF THE CONTRACTOR UNDER THE AUTHORITY OF:

K. A. HARUTUNIAN, P.E. 11-01-22
TX LIC NO. 59181 DATE

SEE DISCLAIMER FOR LIMITATIONS OF USE.

CONTRACT DOCUMENTS DATED FEBRUARY 28, 2022, AS PART OF THE BIDDING DOCUMENTS (DRAWINGS AND SPECIFICATIONS) AND SUBSEQUENTLY ISSUED ADDENDA HAVE BEEN MERGED INTO ONE CONFORMING SET OF DOCUMENTS FOR THE CONVENIENCE OF THE CONTRACTOR. IF INCONSISTENCIES OR AMBIGUITIES BETWEEN "CONFORMED" DOCUMENTS AND CONTRACT DOCUMENTS ARE FOUND, THE CONTRACT DOCUMENTS SHALL GOVERN.

This document, and the designs incorporated herein, is an instrument of professional service that has been developed, designed and prepared by Harutunian Engineering, Inc., and is not to be used, in whole or in part, for any other project without giving written notice to Harutunian Engineering, Inc.

CONFORMED DOCUMENTS

REV	DATE	BY	DESCRIPTION

DESIGNED HEI
DRAWN HEI
CHECKED HEI
DATE NOVEMBER 2022

** ORIGINAL SEALED BY K.A. HARUTUNIAN 02-28-22 TX PE 59181 **

HARUTUNIAN ENGINEERING INCORPORATED
ENGINEERING AND ENVIRONMENTAL CONSULTANTS
8100 CROSS PARK DRIVE
AUSTIN, TEXAS 78754
TBPE REGISTRATION NO. F-2408

carollo
TBPELS No. F-882

CITY OF AUSTIN
FOUNDED 1839
CITY OF AUSTIN

CITY OF AUSTIN
WILD HORSE RANCH WWTP EXPANSION
DEMOLITION
OPERATIONS BUILDING
POWER WIRING SCHEMATICS - DEMOLITION - 2

VERIFY SCALES
BAR IS ONE INCH ON ORIGINAL DRAWING
0 1"
IF NOT ONE INCH ON THIS SHEET, ADJUST SCALES ACCORDINGLY

JOB NO. 10976A.00
DRAWING NO. 80DN03
SHEET NO. 201 OF 464

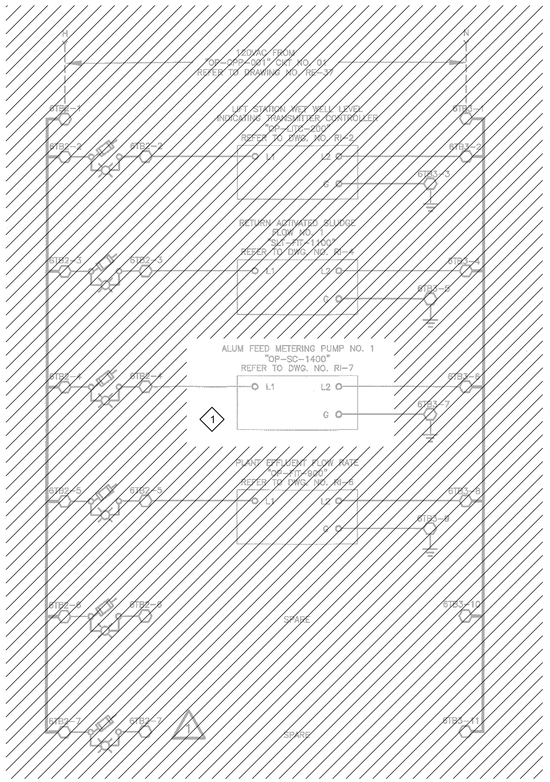

"OP-MCP-001" INSTRUMENTATION
120VAC POWER WIRING SCHEMATIC
SCALE: NTS

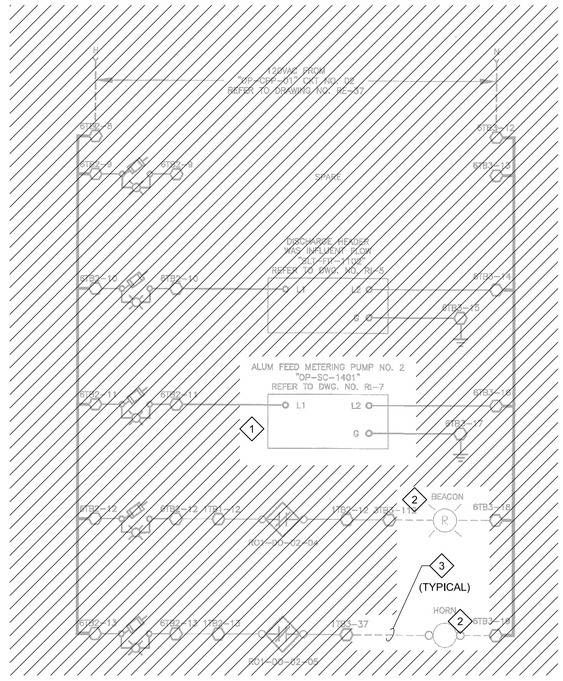

"OP-MCP-001" INSTRUMENTATION
120VAC POWER WIRING SCHEMATIC
SCALE: NTS

WIRING AND TERMINAL DEVICE LEGEND:

- ○ DEVICE WIRING TERMINAL
- ⬡ TERMINAL BLOCK LOCATED IN CONTROL PANEL "OP-MCP-001". ANY DEVICE SHOWN WITH DEVICE WIRING TERMINALS CONNECTED DIRECTLY TO THESE SYMBOLS WITH SOLID LINES IS ALSO LOCATED IN "OP-MCP-001".
- □ TERMINAL BLOCK LOCATED IN 480 VOLT MOTOR CONTROL CENTER "OP-MCC-01L" OR "OP-MCC-01R" AS APPLICABLE. ANY DEVICE SHOWN WITH DEVICE WIRING TERMINALS CONNECTED DIRECTLY TO THESE SYMBOLS WITH SOLID LINES IS ALSO LOCATED IN "OP-MCC-01L" OR "OP-MCC-01R" AS APPLICABLE.
- △ TERMINAL BLOCK LOCATED IN FIELD MOUNTED EQUIPMENT AS NOTED. ANY DEVICE SHOWN WITH DEVICE WIRING TERMINALS CONNECTED DIRECTLY TO THESE SYMBOLS WITH SOLID LINES IS LOCATED IN OR ON THE EQUIPMENT.
- – – – FIELD WIRING

GENERAL NOTES:

1. CONTRACTOR SHALL SIZE ALL ENCLOSURES PER, AND IN ACCORDANCE WITH, THE REQUIREMENTS OF THE NATIONAL ELECTRICAL CODE (N.E.C.).

REFERENCE DRAWINGS:

RE-37 – PANEL SCHEDULE

RI-2 – RI-7 – INSTRUMENT WIRING SCHEMATIC

RECORD DRAWING

THIS CONSTRUCTION DOCUMENT WAS PREPARED USING INFORMATION SUPPLIED BY THE CONTRACTOR TO REPRESENT CONSTRUCTION CHANGES. THIS DOCUMENT IS FOR INFORMATION AND REFERENCE IN CONNECTION WITH THE OWNER'S USE AND OCCUPANCY OF THE PROJECT AND IS NOT INTENDED FOR BID, PERMIT OR CONSTRUCTION.

BY: K.A. Harutunian DATE: 1/5/2007

◇# KEY NOTES

1. METERING PUMP SHALL REMAIN AND BE REUSED DURING RENOVATION ACTIVITIES. CONTRACTOR SHALL FIELD VERIFY EXISTING CONDITIONS AND TAKE DETAILED NOTES OF THE EXISTING METERING PUMP WIRING TERMINATIONS PRIOR TO DISCONNECTING THE METERING PUMP IN ORDER TO RETURN THE PUMP TO SERVICE DURING RENOVATION ACTIVITIES.
2. EXISTING ALARM BEACON AND HORN SHALL REMAIN AND BE REUSED DURING RENOVATION ACTIVITIES. CONTRACTOR SHALL FIELD VERIFY EXISTING CONDITIONS AND TAKE DETAILED NOTES OF THE EXISTING WIRING TERMINATIONS TO THE ALARM BEACON AND HORN IN ORDER TO RETURN THEM TO SERVICE DURING RENOVATION ACTIVITIES.
3. THE EXISTING WIRE ROUTING BETWEEN THE BEACON/HORN AND THE MAIN CONTROL PANEL SHALL BE REUSED. CONNECT WIRING TO PROPOSED TERMINAL BLOCKS WITHIN THE MAIN CONTROL PANEL. IF THE EXISTING WIRING IS OF INSUFFICIENT LENGTH TO CONNECT TO THE PROPOSED TERMINAL BLOCKS, CONTRACTOR SHALL FURNISH AND INSTALL NEW CONTROL WIRING WITHIN THE EXISTING CONDUIT AND MAKE ALL FINAL TERMINATIONS.

GENERAL NOTES:

1. DISCONNECT AND REMOVE THE EXISTING MAIN CONTROL PANEL INSTRUMENTATION AND CONTROL EQUIPMENT (I.E. PLC, BREAKERS, TERMINAL BLOCKS, INTERCONNECT WIRING, CONTROL DEVICES, ETC.) IN THEIR ENTIRETY. REFER TO WIRING SCHEMATICS, NETWORK ARCHITECTURE, ETC. FOR ADDITIONAL REQUIREMENTS AND INFORMATION.
2. DISCONNECT AND REMOVE EXISTING FIELD WIRING AND ASSOCIATED FIELD EQUIPMENT IN THEIR ENTIRETY. REFER TO PLAN DRAWINGS FOR ADDITIONAL INFORMATION.

REUSE OF DOCUMENTS
This document and the ideas and designs incorporated herein as an instrument of professional service has been developed, designed and prepared by Harutunian Engineering, Inc. and is not to be used, in whole or part, for any other project without the written authorization of the City of Austin and Harutunian Engineering, Inc. © 2003

HARUTUNIAN ENGINEERING INCORPORATED
ENGINEERING AND ENVIRONMENTAL CONSULTANTS
305 EAST HUNTLAND DRIVE
SUITE 500
AUSTIN, TEXAS
78752

NO.	DATE	REVISION	APPROV.
4			
3			
2			
1	1/5/7	RECORD DRAWING	K.A.H

THE SEAL APPEARING ON THIS DOCUMENT WAS AUTHORIZED BY K. A. HARUTUNIAN, P.E. 59181 ON OCTOBER 16, 2003

WARNING
0 1/2 1
IF THIS BAR DOES NOT MEASURE 1" THEN DRAWING IS NOT TO SCALE

STATE OF TEXAS
K. A. HARUTUNIAN
59181
REGISTERED
PROFESSIONAL ENGINEER

Dwg. No. RI-25

CITY OF AUSTIN, TEXAS
NORTHEAST INTERIM WASTEWATER TREATMENT PLANT

OPERATIONS BUILDING INSTRUMENT POWER WIRING SCHEMATICS (SHEET 3 OF 5)

Turner Collie & Braden Inc.
ENGINEERS • PLANNERS • PROJECT MANAGERS

Unit PUBLIC WORKS	Scale NONE	Date OCTOBER 2003	
Designed HEI	Checked HEI	Job No. 052-122094-0008	
Drawn HEI	Approved HEI	Sheet 277/527	

THIS CONFORMED DOCUMENT IS RELEASED FOR THE CONVENIENCE OF THE CONTRACTOR UNDER THE AUTHORITY OF:

K. A. HARUTUNIAN, P.E.
TX LIC NO. 59181

11-01-22
DATE

SEE DISCLAIMER FOR LIMITATIONS OF USE.

CONTRACT DOCUMENTS DATED FEBRUARY 28, 2022, AS PART OF THE BIDDING DOCUMENTS (DRAWINGS AND SPECIFICATIONS) AND SUBSEQUENTLY ISSUED ADDENDA HAVE BEEN MERGED INTO ONE CONFORMING SET OF DOCUMENTS FOR THE CONVENIENCE OF THE CONTRACTOR. IF INCONSISTENCIES OR AMBIGUITIES BETWEEN "CONFORMED" DOCUMENTS AND CONTRACT DOCUMENTS ARE FOUND, THE CONTRACT DOCUMENTS SHALL GOVERN.

This document, and the designs incorporated herein, is an instrument of professional service that has been developed, designed and prepared by Harutunian Engineering, Inc., and is not to be used, in whole or in part, for any other project without giving written notice to Harutunian Engineering, Inc.

REV	DATE	BY	DESCRIPTION
			CONFORMED DOCUMENTS

DESIGNED HEI
DRAWN HEI
CHECKED HEI
DATE NOVEMBER 2022

** ORIGINAL SEALED BY K.A. HARUTUNIAN 02-28-22 TX PE 59181 **

HARUTUNIAN ENGINEERING INCORPORATED
ENGINEERING AND ENVIRONMENTAL CONSULTANTS
8100 CROSS PARK DRIVE
AUSTIN, TEXAS 78754
TBPE REGISTRATION NO. F-2408

carollo
TBPELS No. F-882

CITY OF AUSTIN
FOUNDED 1839

CITY OF AUSTIN

CITY OF AUSTIN
WILD HORSE RANCH WWTP EXPANSION
DEMOLITION
OPERATIONS BUILDING
POWER WIRING SCHEMATICS - DEMOLITION - 3

VERIFY SCALES
BAR IS ONE INCH ON ORIGINAL DRAWING
0 1"
IF NOT ONE INCH ON THIS SHEET, ADJUST SCALES ACCORDINGLY

JOB NO. 10976A.00
DRAWING NO. 80DN04
SHEET NO. 202 OF 464

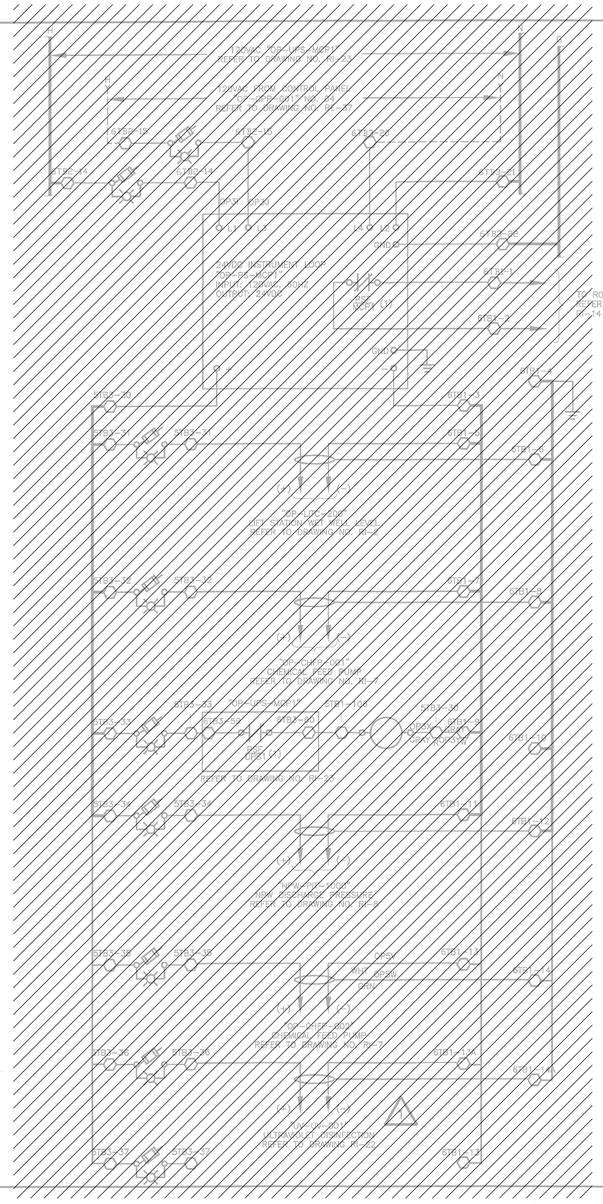

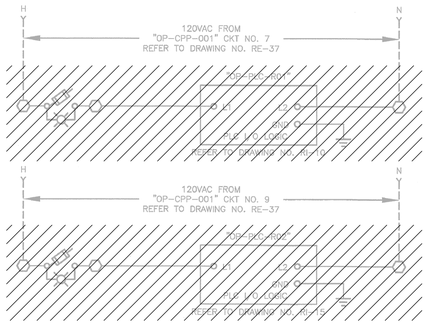

MAIN CONTROL PANEL "OP-MCP-001"
PLC REMOTE I/O INSTRUMENTATION
POWER WIRING SCHEMATIC

SCALE: NTS

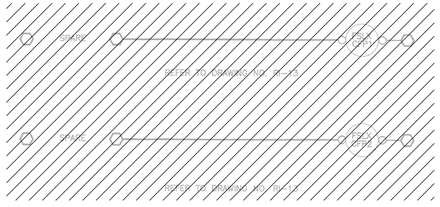

WIRING AND TERMINAL DEVICE LEGEND:

- DEVICE WIRING TERMINAL
- TERMINAL BLOCK LOCATED IN CONTROL PANEL "OP-MCP-001". ANY DEVICE SHOWN WITH DEVICE WIRING TERMINALS CONNECTED DIRECTLY TO THESE SYMBOLS WITH SOLID LINES IS ALSO LOCATED IN "OP-MCP-001".
- TERMINAL BLOCK LOCATED IN 480 VOLT MOTOR CONTROL CENTER "OP-MCC-01L" OR "OP-MCC-01R" AS APPLICABLE. ANY DEVICE SHOWN WITH DEVICE WIRING TERMINALS CONNECTED DIRECTLY TO THESE SYMBOLS WITH SOLID LINES IS ALSO LOCATED IN "OP-MCC-01L" OR "OP-MCC-01R" AS APPLICABLE.
- TERMINAL BLOCK LOCATED IN FIELD MOUNTED EQUIPMENT AS NOTED. ANY DEVICE SHOWN WITH DEVICE WIRING TERMINALS CONNECTED DIRECTLY TO THESE SYMBOLS WITH SOLID LINES IS LOCATED IN OR ON THE EQUIPMENT.
- FIELD WIRING

REFERENCE DRAWINGS:

RE-37 – PANEL SCHEDULE

GENERAL NOTES:

1. DISCONNECT AND REMOVE THE EXISTING MAIN CONTROL PANEL INSTRUMENTATION AND CONTROL EQUIPMENT (I.E. POWER SUPPLY, PLC, BREAKERS, TERMINAL BLOCKS, INTERCONNECT WIRING, CONTROL DEVICES, ETC.) IN THEIR ENTIRETY. REFER TO WIRING SCHEMATICS, NETWORK ARCHITECTURE, ETC. FOR ADDITIONAL REQUIREMENTS AND INFORMATION.
2. DISCONNECT AND REMOVE EXISTING FIELD WIRING AND ASSOCIATED FIELD EQUIPMENT IN THEIR ENTIRETY. REFER TO PLAN DRAWINGS FOR ADDITIONAL INFORMATION.

RECORD DRAWING

THIS CONSTRUCTION DOCUMENT WAS PREPARED USING INFORMATION SUPPLIED BY THE CONTRACTOR TO REPRESENT CONSTRUCTION CHANGES. THIS DOCUMENT IS FOR INFORMATION AND REFERENCE IN CONNECTION WITH THE OWNER'S USE AND OCCUPANCY OF THE PROJECT AND IS NOT INTENDED FOR BID, PERMIT OR CONSTRUCTION.

BY: K. A. Harutunian DATE: 1/5/2007

REUSE OF DOCUMENTS
This document and the ideas and designs incorporated herein as an instrument of professional service has been developed, designed and prepared by Harutunian Engineering, Inc. and is not to be used, in whole or part, for any other project without the written authorization of the City of Austin and Harutunian Engineering, Inc. © 2003

HARUTUNIAN ENGINEERING INCORPORATED
ENGINEERING AND ENVIRONMENTAL CONSULTANTS
305 EAST HUNTLAND DRIVE
SUITE 500
AUSTIN, TEXAS
78752

NO.	DATE	REVISION	BY
4			
3			
2			
1	1/5/7	RECORD DRAWING	K.A.H.

THE SEAL APPEARING ON THIS DOCUMENT WAS AUTHORIZED BY K. A. HARUTUNIAN, P.E. 59181 ON OCTOBER 18, 2003

WARNING
0 1/2 1
IF THIS BAR DOES NOT MEASURE 1" THEN DRAWING IS NOT TO SCALE

STATE OF TEXAS · K. A. HARUTUNIAN · 59181 · REGISTERED · PROFESSIONAL ENGINEER

Dsg. No. RI-26

CITY OF AUSTIN, TEXAS
NORTHEAST INTERIM WASTEWATER TREATMENT PLANT

OPERATIONS BUILDING INSTRUMENT POWER WIRING SCHEMATICS (SHEET 4 OF 5)

Turner Collie & Braden Inc.
ENGINEERS • PLANNERS • PROJECT MANAGERS

Unit PUBLIC WORKS	Scale NONE	Date OCTOBER 2003	
Designed HEI	Checked HEI	Job No. 052-122094-0008	
Drawn HEI	Approved HEI	Sheet 278/327	

THIS CONFORMED DOCUMENT IS RELEASED FOR THE CONVENIENCE OF THE CONTRACTOR UNDER THE AUTHORITY OF:

K. A. Harutunian — 11-01-22

K. A. HARUTUNIAN, P.E. — DATE
TX LIC NO. 59181

SEE DISCLAIMER FOR LIMITATIONS OF USE.

CONTRACT DOCUMENTS DATED FEBRUARY 28, 2022, AS PART OF THE BIDDING DOCUMENTS (DRAWINGS AND SPECIFICATIONS) AND SUBSEQUENTLY ISSUED ADDENDA HAVE BEEN MERGED INTO ONE CONFORMING SET OF DOCUMENTS FOR THE CONVENIENCE OF THE CONTRACTOR. IF INCONSISTENCIES OR AMBIGUITIES BETWEEN "CONFORMED" DOCUMENTS AND CONTRACT DOCUMENTS ARE FOUND, THE CONTRACT DOCUMENTS SHALL GOVERN.

This document, and the designs incorporated herein, is an instrument of professional service that has been developed, designed and prepared by Harutunian Engineering, Inc., and is not to be used, in whole or in part, for any other project without giving written notice to Harutunian Engineering, Inc.

REV	DATE	BY	DESCRIPTION
			CONFORMED DOCUMENTS

DESIGNED HEI
DRAWN HEI
CHECKED HEI
DATE NOVEMBER 2022

** ORIGINAL SEALED BY K.A. HARUTUNIAN 02-28-22 TX PE 59181 **

HARUTUNIAN ENGINEERING INCORPORATED
ENGINEERING AND ENVIRONMENTAL CONSULTANTS
8100 CROSS PARK DRIVE
AUSTIN, TEXAS 78754
TBPE REGISTRATION NO. F-2408

carollo
TBPELS No. F-882

CITY OF AUSTIN
FOUNDED 1839
CITY OF AUSTIN

CITY OF AUSTIN
WILD HORSE RANCH WWTP EXPANSION
DEMOLITION
OPERATIONS BUILDING
POWER WIRING SCHEMATICS - DEMOLITION - 4

VERIFY SCALES
BAR IS ONE INCH ON ORIGINAL DRAWING
0 1"
IF NOT ONE INCH ON THIS SHEET, ADJUST SCALES ACCORDINGLY

JOB NO. 10976A.00
DRAWING NO. 80DN05
SHEET NO. 203 OF 464

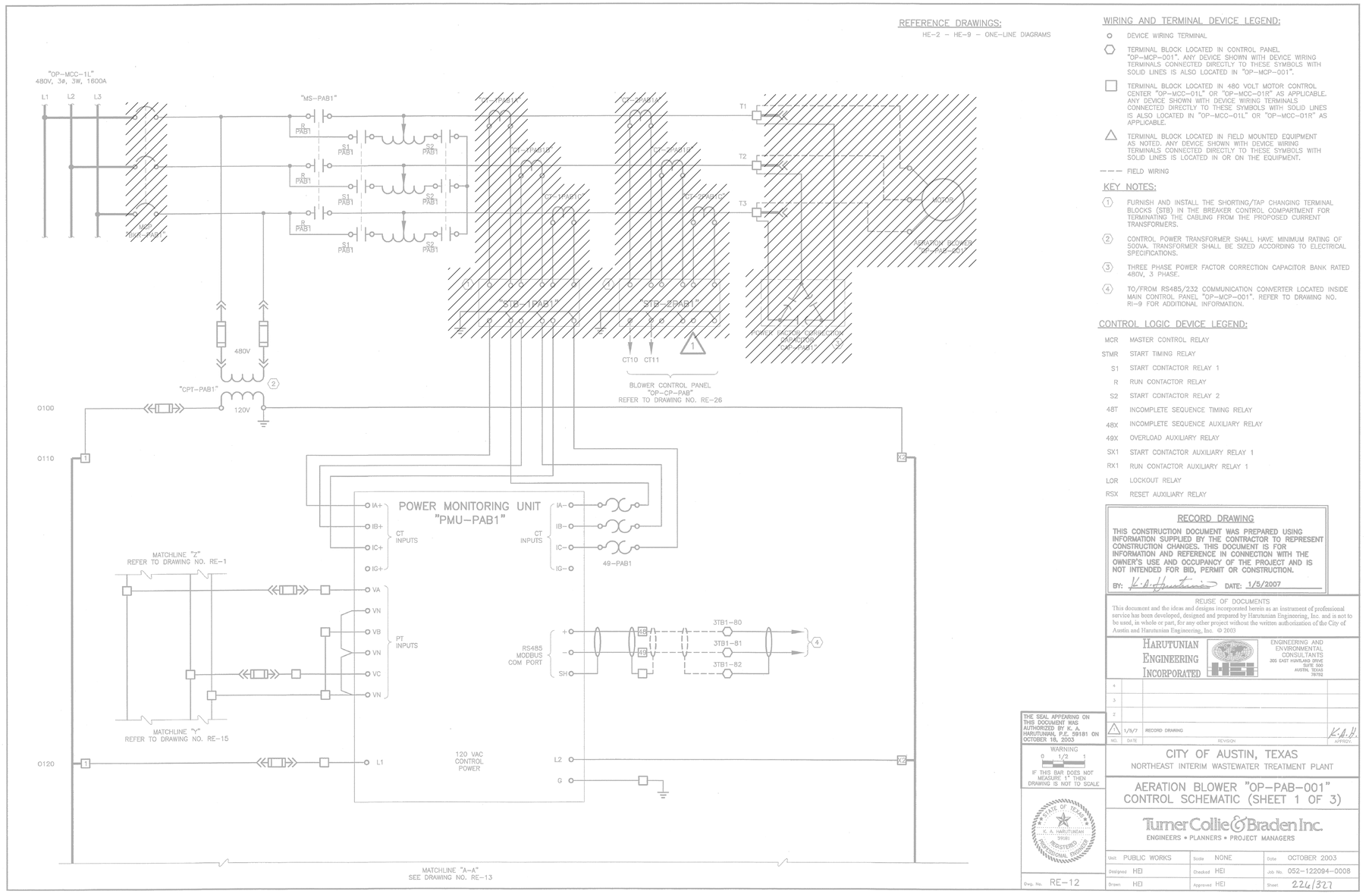

REFERENCE DRAWINGS:

HE-2 – HE-9 – ONE-LINE DIAGRAMS

WIRING AND TERMINAL DEVICE LEGEND:

- DEVICE WIRING TERMINAL
- TERMINAL BLOCK LOCATED IN CONTROL PANEL "OP-MCP-001". ANY DEVICE SHOWN WITH DEVICE WIRING TERMINALS CONNECTED DIRECTLY TO THESE SYMBOLS WITH SOLID LINES IS ALSO LOCATED IN "OP-MCP-001".
- TERMINAL BLOCK LOCATED IN 480 VOLT MOTOR CONTROL CENTER "OP-MCC-01L" OR "OP-MCC-01R" AS APPLICABLE. ANY DEVICE SHOWN WITH DEVICE WIRING TERMINALS CONNECTED DIRECTLY TO THESE SYMBOLS WITH SOLID LINES IS ALSO LOCATED IN "OP-MCC-01L" OR "OP-MCC-01R" AS APPLICABLE.
- TERMINAL BLOCK LOCATED IN FIELD MOUNTED EQUIPMENT AS NOTED. ANY DEVICE SHOWN WITH DEVICE WIRING TERMINALS CONNECTED DIRECTLY TO THESE SYMBOLS WITH SOLID LINES IS LOCATED IN OR ON THE EQUIPMENT.
- – – – FIELD WIRING

KEY NOTES:

1. FURNISH AND INSTALL THE SHORTING/TAP CHANGING TERMINAL BLOCKS (STB) IN THE BREAKER CONTROL COMPARTMENT FOR TERMINATING THE CABLING FROM THE PROPOSED CURRENT TRANSFORMERS.
2. CONTROL POWER TRANSFORMER SHALL HAVE MINIMUM RATING OF 500VA. TRANSFORMER SHALL BE SIZED ACCORDING TO ELECTRICAL SPECIFICATIONS.
3. THREE PHASE POWER FACTOR CORRECTION CAPACITOR BANK RATED 480V, 3 PHASE.
4. TO/FROM RS485/232 COMMUNICATION CONVERTER LOCATED INSIDE MAIN CONTROL PANEL "OP-MCP-001". REFER TO DRAWING NO. RI-9 FOR ADDITIONAL INFORMATION.

CONTROL LOGIC DEVICE LEGEND:

MCR	MASTER CONTROL RELAY
STMR	START TIMING RELAY
S1	START CONTACTOR RELAY 1
R	RUN CONTACTOR RELAY
S2	START CONTACTOR RELAY 2
48T	INCOMPLETE SEQUENCE TIMING RELAY
48X	INCOMPLETE SEQUENCE AUXILIARY RELAY
49X	OVERLOAD AUXILIARY RELAY
SX1	START CONTACTOR AUXILIARY RELAY 1
RX1	RUN CONTACTOR AUXILIARY RELAY 1
LOR	LOCKOUT RELAY
RSX	RESET AUXILIARY RELAY

RECORD DRAWING

THIS CONSTRUCTION DOCUMENT WAS PREPARED USING INFORMATION SUPPLIED BY THE CONTRACTOR TO REPRESENT CONSTRUCTION CHANGES. THIS DOCUMENT IS FOR INFORMATION AND REFERENCE IN CONNECTION WITH THE OWNER'S USE AND OCCUPANCY OF THE PROJECT AND IS NOT INTENDED FOR BID, PERMIT OR CONSTRUCTION.

BY: K.A. Harutunian DATE: 1/5/2007

REUSE OF DOCUMENTS
This document and the ideas and designs incorporated herein as an instrument of professional service has been developed, designed and prepared by Harutunian Engineering, Inc. and is not to be used, in whole or part, for any other project without the written authorization of the City of Austin and Harutunian Engineering, Inc. © 2003

HARUTUNIAN ENGINEERING INCORPORATED
ENGINEERING AND ENVIRONMENTAL CONSULTANTS
305 EAST HUNTLAND DRIVE SUITE 500 AUSTIN, TEXAS 78752

NO.	DATE	REVISION	APPROV.
4			
5			
6			
7	1/5/7	RECORD DRAWING	K.A.H.

THE SEAL APPEARING ON THIS DOCUMENT WAS AUTHORIZED BY K. A. HARUTUNIAN, P.E. 59181 ON OCTOBER 15, 2003

WARNING
0 1/2 1
IF THIS BAR DOES NOT MEASURE 1" THEN DRAWING IS NOT TO SCALE

STATE OF TEXAS K. A. HARUTUNIAN 59181 REGISTERED PROFESSIONAL ENGINEER

CITY OF AUSTIN, TEXAS
NORTHEAST INTERIM WASTEWATER TREATMENT PLANT

AERATION BLOWER "OP-PAB-001"
CONTROL SCHEMATIC (SHEET 1 OF 3)

Turner Collie & Braden Inc.
ENGINEERS • PLANNERS • PROJECT MANAGERS

Unit	PUBLIC WORKS	Scale	NONE
Designed	HEI	Checked	HEI
Drawn	HEI	Approved	HEI
Date	OCTOBER 2003	Job No.	052-122094-0008
Dwg. No.	RE-12	Sheet	226/327

GENERAL NOTES:

1. DISCONNECT AND REMOVE THE EXISTING MAIN CONTROL PANEL INSTRUMENTATION AND CONTROL EQUIPMENT (I.E. SIGNAL ISOLATORS,TERMINAL BLOCKS, INTERCONNECT WIRING, CONTROL DEVICES, ETC.) IN THEIR ENTIRETY. REFER TO WIRING SCHEMATICS FOR ADDITIONAL REQUIREMENTS AND INFORMATION.
2. DISCONNECT AND REMOVE EXISTING FIELD WIRING AND ASSOCIATED FIELD EQUIPMENT IN THEIR ENTIRETY. REFER TO PLAN DRAWINGS FOR ADDITIONAL INFORMATION.

THIS CONFORMED DOCUMENT IS RELEASED FOR THE CONVENIENCE OF THE CONTRACTOR UNDER THE AUTHORITY OF:

K. A. HARUTUNIAN, P.E.
TX LIC NO. 59181

11-01-22
DATE

SEE DISCLAIMER FOR LIMITATIONS OF USE.

CONTRACT DOCUMENTS DATED FEBRUARY 28, 2022, AS PART OF THE BIDDING DOCUMENTS (DRAWINGS AND SPECIFICATIONS) AND SUBSEQUENTLY ISSUED ADDENDA HAVE BEEN MERGED INTO ONE CONFORMING SET OF DOCUMENTS FOR THE CONVENIENCE OF THE CONTRACTOR. IF INCONSISTENCIES OR AMBIGUITIES BETWEEN "CONFORMED" DOCUMENTS AND CONTRACT DOCUMENTS ARE FOUND, THE CONTRACT DOCUMENTS SHALL GOVERN.

This document, and the designs incorporated herein, is an instrument of professional service that has been developed, designed and prepared by Harutunian Engineering, Inc., and is not to be used, in whole or in part, for any other project without giving written notice to Harutunian Engineering, Inc.

REV	DATE	BY	DESCRIPTION
			CONFORMED DOCUMENTS

DESIGNED HEI
DRAWN HEI
CHECKED HEI
DATE NOVEMBER 2022

** ORIGINAL SEALED BY K.A. HARUTUNIAN 02-28-22 TX PE 59181 **

HARUTUNIAN ENGINEERING INCORPORATED
ENGINEERING AND ENVIRONMENTAL CONSULTANTS
8100 CROSS PARK DRIVE AUSTIN, TEXAS 78754
TBPE REGISTRATION NO. F-2408

carollo
TBPELS No. F-882

CITY OF AUSTIN FOUNDED 1839
CITY OF AUSTIN

CITY OF AUSTIN
WILD HORSE RANCH WWTP EXPANSION
DEMOLITION
AERATION BLOWER "OP-PAB-001"
CONTROL WIRING SCHEMATICS - DEMOLITION - 1

VERIFY SCALES
BAR IS ONE INCH ON ORIGINAL DRAWING
0 1"
IF NOT ONE INCH ON THIS SHEET, ADJUST SCALES ACCORDINGLY

JOB NO. 10976A.00
DRAWING NO. 80DN06
SHEET NO. 204 OF 464

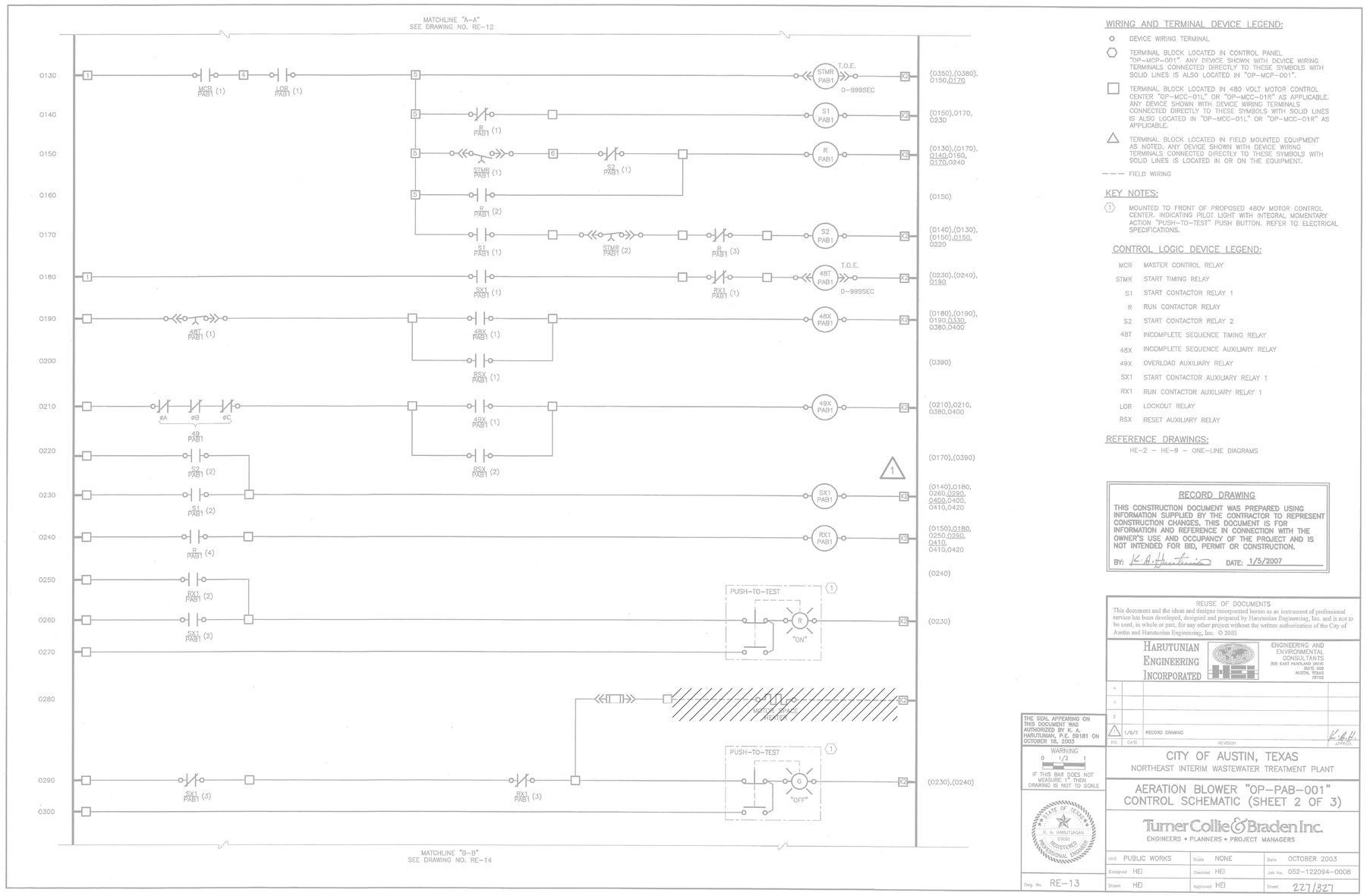

WIRING AND TERMINAL DEVICE LEGEND:

- ○ DEVICE WIRING TERMINAL
- ⬡ TERMINAL BLOCK LOCATED IN CONTROL PANEL "OP-MCP-001". ANY DEVICE SHOWN WITH DEVICE WIRING TERMINALS CONNECTED DIRECTLY TO THESE SYMBOLS WITH SOLID LINES IS ALSO LOCATED IN "OP-MCP-001".
- □ TERMINAL BLOCK LOCATED IN 480 VOLT MOTOR CONTROL CENTER "OP-MCC-01L" OR "OP-MCC-01R" AS APPLICABLE. ANY DEVICE SHOWN WITH DEVICE WIRING TERMINALS CONNECTED DIRECTLY TO THESE SYMBOLS WITH SOLID LINES IS ALSO LOCATED IN "OP-MCC-01L" OR "OP-MCC-01R" AS APPLICABLE.
- △ TERMINAL BLOCK LOCATED IN FIELD MOUNTED EQUIPMENT AS NOTED. ANY DEVICE SHOWN WITH DEVICE WIRING TERMINALS CONNECTED DIRECTLY TO THESE SYMBOLS WITH SOLID LINES IS LOCATED IN OR ON THE EQUIPMENT.
- – – – FIELD WIRING

KEY NOTES:

(1) MOUNTED TO FRONT OF PROPOSED 480V MOTOR CONTROL CENTER. INDICATING PILOT LIGHT WITH INTEGRAL MOMENTARY ACTION "PUSH-TO-TEST" PUSH BUTTON. REFER TO ELECTRICAL SPECIFICATIONS.

CONTROL LOGIC DEVICE LEGEND:

MCR	MASTER CONTROL RELAY
STMR	START TIMING RELAY
S1	START CONTACTOR RELAY 1
R	RUN CONTACTOR RELAY
S2	START CONTACTOR RELAY 2
48T	INCOMPLETE SEQUENCE TIMING RELAY
48X	INCOMPLETE SEQUENCE AUXILIARY RELAY
49X	OVERLOAD AUXILIARY RELAY
SX1	START CONTACTOR AUXILIARY RELAY 1
RX1	RUN CONTACTOR AUXILIARY RELAY 1
LOR	LOCKOUT RELAY
RSX	RESET AUXILIARY RELAY

REFERENCE DRAWINGS:

HE-2 – HE-9 – ONE-LINE DIAGRAMS

RECORD DRAWING

THIS CONSTRUCTION DOCUMENT WAS PREPARED USING INFORMATION SUPPLIED BY THE CONTRACTOR TO REPRESENT CONSTRUCTION CHANGES. THIS DOCUMENT IS FOR INFORMATION AND REFERENCE IN CONNECTION WITH THE OWNER'S USE AND OCCUPANCY OF THE PROJECT AND IS NOT INTENDED FOR BID, PERMIT OR CONSTRUCTION.

BY: K. A. Harutunian DATE: 1/5/2007

REUSE OF DOCUMENTS
This document and the ideas and designs incorporated herein as an instrument of professional service has been developed, designed and prepared by Harutunian Engineering, Inc. and is not to be used, in whole or part, for any other project without the written authorization of the City of Austin and Harutunian Engineering, Inc. © 2003

HARUTUNIAN ENGINEERING INCORPORATED
ENGINEERING AND ENVIRONMENTAL CONSULTANTS
305 EAST HUNTLAND DRIVE, SUITE 500
AUSTIN, TEXAS 78752

NO.	DATE	REVISION	APPROV.
4			
3			
2			
1	1/5/7	RECORD DRAWING	K.A.H.

THE SEAL APPEARING ON THIS DOCUMENT WAS AUTHORIZED BY K. A. HARUTUNIAN, P.E. 59181 ON OCTOBER 16, 2003

WARNING
0 1/2 1
IF THIS BAR DOES NOT MEASURE 1" THEN DRAWING IS NOT TO SCALE

STATE OF TEXAS · K. A. HARUTUNIAN · 59181 · REGISTERED · PROFESSIONAL ENGINEER

Dwg. No. RE-13

CITY OF AUSTIN, TEXAS
NORTHEAST INTERIM WASTEWATER TREATMENT PLANT

AERATION BLOWER "OP-PAB-001"
CONTROL SCHEMATIC (SHEET 2 OF 3)

Turner Collie & Braden Inc.
ENGINEERS • PLANNERS • PROJECT MANAGERS

Unit PUBLIC WORKS	Scale NONE	Date OCTOBER 2003	
Designed HEI	Checked HEI	Job No. 052-122094-0008	
Drawn HEI	Approved HEI	Sheet 227/327	

GENERAL NOTES:

1. DISCONNECT AND REMOVE THE EXISTING MAIN CONTROL PANEL INSTRUMENTATION AND CONTROL EQUIPMENT (I.E. SIGNAL ISOLATORS,TERMINAL BLOCKS, INTERCONNECT WIRING, CONTROL DEVICES, ETC.) IN THEIR ENTIRETY. REFER TO WIRING SCHEMATICS FOR ADDITIONAL REQUIREMENTS AND INFORMATION. B'd2.
2. DISCONNECT AND REMOVE EXISTING FIELD WIRING AND ASSOCIATED FIELD EQUIPMENT IN THEIR ENTIRETY. REFER TO PLAN DRAWINGS FOR ADDITIONAL INFORMATION.

THIS CONFORMED DOCUMENT IS RELEASED FOR THE CONVENIENCE OF THE CONTRACTOR UNDER THE AUTHORITY OF:

K. A. Harutunian 11-01-22

K. A. HARUTUNIAN, P.E. DATE
TX LIC NO. 59181

SEE DISCLAIMER FOR LIMITATIONS OF USE.

CONTRACT DOCUMENTS DATED FEBRUARY 28, 2022, AS PART OF THE BIDDING DOCUMENTS (DRAWINGS AND SPECIFICATIONS) AND SUBSEQUENTLY ISSUED ADDENDA HAVE BEEN MERGED INTO ONE CONFORMING SET OF DOCUMENTS FOR THE CONVENIENCE OF THE CONTRACTOR. IF INCONSISTENCIES OR AMBIGUITIES BETWEEN "CONFORMED" DOCUMENTS AND CONTRACT DOCUMENTS ARE FOUND, THE CONTRACT DOCUMENTS SHALL GOVERN.

This document, and the designs incorporated herein, is an instrument of professional service that has been developed, designed and prepared by Harutunian Engineering, Inc., and is not to be used, in whole or in part, for any other project without giving written notice to Harutunian Engineering, Inc.

REV	DATE	BY	DESCRIPTION
			CONFORMED DOCUMENTS

DESIGNED HEI
DRAWN HEI
CHECKED HEI
DATE NOVEMBER 2022

** ORIGINAL SEALED BY K.A. HARUTUNIAN 02-28-22 TX PE 59181 **

HARUTUNIAN ENGINEERING INCORPORATED
ENGINEERING AND ENVIRONMENTAL CONSULTANTS
8100 CROSS PARK DRIVE
AUSTIN, TEXAS 78754
TBPE REGISTRATION NO. F-2408

carollo
TBPELS No. F-882

CITY OF AUSTIN
FOUNDED 1839

CITY OF AUSTIN

CITY OF AUSTIN
WILD HORSE RANCH WWTP EXPANSION
DEMOLITION
AERATION BLOWER "OP-PAB-001"
CONTROL WIRING SCHEMATICS - DEMOLITION - 2

VERIFY SCALES
BAR IS ONE INCH ON ORIGINAL DRAWING
0 1"
IF NOT ONE INCH ON THIS SHEET, ADJUST SCALES ACCORDINGLY

JOB NO. 10976A.00
DRAWING NO. 80DN07
SHEET NO. 205 OF 464

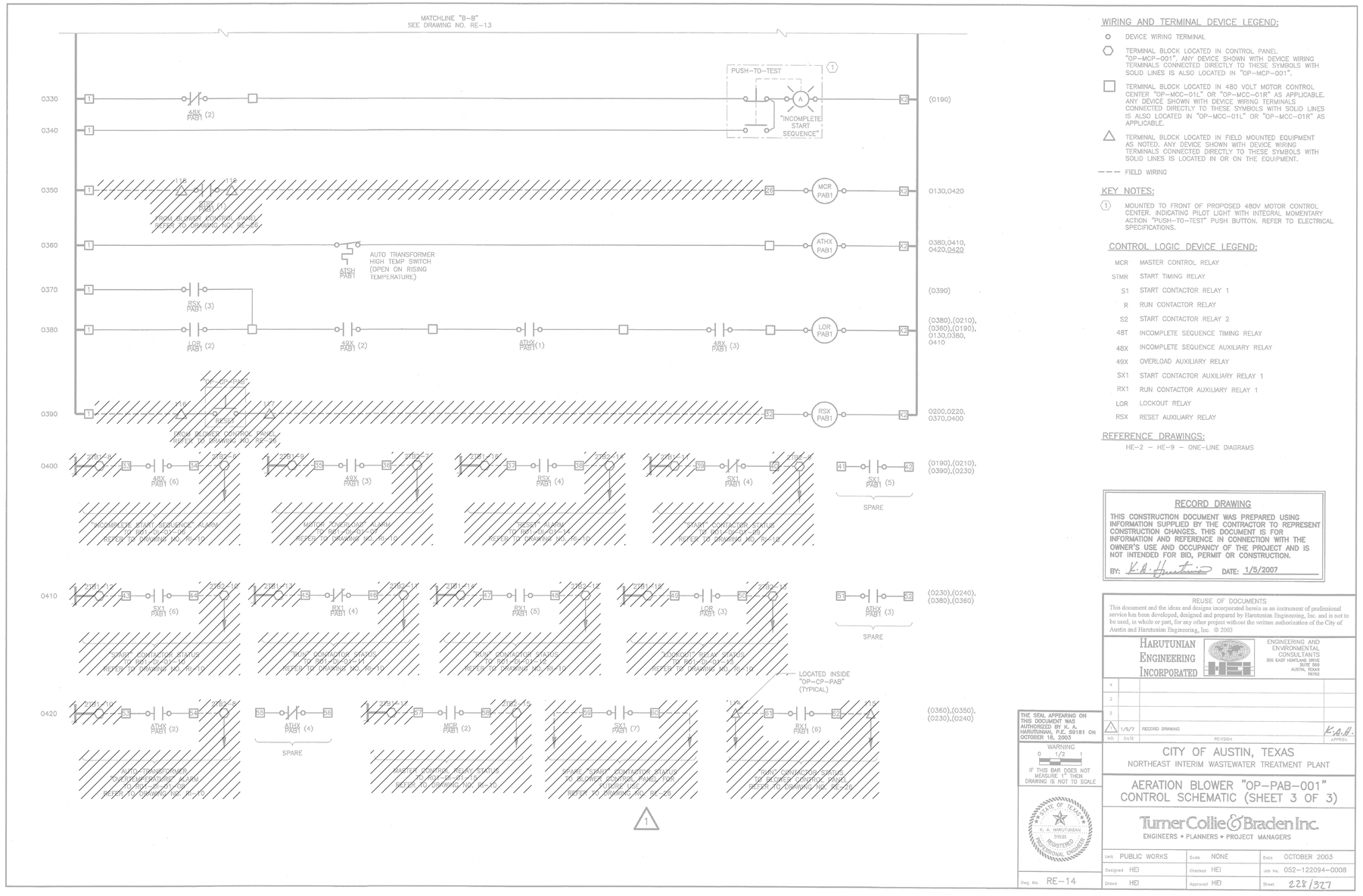

WIRING AND TERMINAL DEVICE LEGEND:

- DEVICE WIRING TERMINAL
- TERMINAL BLOCK LOCATED IN CONTROL PANEL "OP-MCP-001". ANY DEVICE SHOWN WITH DEVICE WIRING TERMINALS CONNECTED DIRECTLY TO THESE SYMBOLS WITH SOLID LINES IS ALSO LOCATED IN "OP-MCP-001".
- TERMINAL BLOCK LOCATED IN 480 VOLT MOTOR CONTROL CENTER "OP-MCC-01L" OR "OP-MCC-01R" AS APPLICABLE. ANY DEVICE SHOWN WITH DEVICE WIRING TERMINALS CONNECTED DIRECTLY TO THESE SYMBOLS WITH SOLID LINES IS ALSO LOCATED IN "OP-MCC-01L" OR "OP-MCC-01R" AS APPLICABLE.
- TERMINAL BLOCK LOCATED IN FIELD MOUNTED EQUIPMENT AS NOTED. ANY DEVICE SHOWN WITH DEVICE WIRING TERMINALS CONNECTED DIRECTLY TO THESE SYMBOLS WITH SOLID LINES IS LOCATED IN OR ON THE EQUIPMENT.
- FIELD WIRING

KEY NOTES:

(1) MOUNTED TO FRONT OF PROPOSED 480V MOTOR CONTROL CENTER. INDICATING PILOT LIGHT WITH INTEGRAL MOMENTARY ACTION "PUSH-TO-TEST" PUSH BUTTON. REFER TO ELECTRICAL SPECIFICATIONS.

CONTROL LOGIC DEVICE LEGEND:

MCR	MASTER CONTROL RELAY
STMR	START TIMING RELAY
S1	START CONTACTOR RELAY 1
R	RUN CONTACTOR RELAY
S2	START CONTACTOR RELAY 2
48T	INCOMPLETE SEQUENCE TIMING RELAY
48X	INCOMPLETE SEQUENCE AUXILIARY RELAY
49X	OVERLOAD AUXILIARY RELAY
SX1	START CONTACTOR AUXILIARY RELAY 1
RX1	RUN CONTACTOR AUXILIARY RELAY 1
LOR	LOCKOUT RELAY
RSX	RESET AUXILIARY RELAY

REFERENCE DRAWINGS:

HE-2 – HE-9 – ONE-LINE DIAGRAMS

GENERAL NOTES:

1. DISCONNECT AND REMOVE THE EXISTING MAIN CONTROL PANEL INSTRUMENTATION AND CONTROL EQUIPMENT (I.E. SIGNAL ISOLATORS,TERMINAL BLOCKS, INTERCONNECT WIRING, CONTROL DEVICES, ETC.) IN THEIR ENTIRETY. REFER TO WIRING SCHEMATICS FOR ADDITIONAL REQUIREMENTS AND INFORMATION.
2. DISCONNECT AND REMOVE EXISTING FIELD WIRING AND ASSOCIATED FIELD EQUIPMENT IN THEIR ENTIRETY. REFER TO PLAN DRAWINGS FOR ADDITIONAL INFORMATION.

RECORD DRAWING

THIS CONSTRUCTION DOCUMENT WAS PREPARED USING INFORMATION SUPPLIED BY THE CONTRACTOR TO REPRESENT CONSTRUCTION CHANGES. THIS DOCUMENT IS FOR INFORMATION AND REFERENCE IN CONNECTION WITH THE OWNER'S USE AND OCCUPANCY OF THE PROJECT AND IS NOT INTENDED FOR BID, PERMIT OR CONSTRUCTION.

BY: K.A. Hartutinian DATE: 1/5/2007

REUSE OF DOCUMENTS
This document and the ideas and designs incorporated herein as an instrument of professional service has been developed, designed and prepared by Harutunian Engineering, Inc. and is not to be used, in whole or part, for any other project without the written authorization of the City of Austin and Harutunian Engineering, Inc. © 2003

HARUTUNIAN ENGINEERING INCORPORATED
ENGINEERING AND ENVIRONMENTAL CONSULTANTS
205 EAST HUNTLAND DRIVE, SUITE 550, AUSTIN, TEXAS 78752

NO.	DATE	REVISION	APPROV.
4			
3			
2			
1	1/5/7	RECORD DRAWING	K.A.H.

THE SEAL APPEARING ON THIS DOCUMENT WAS AUTHORIZED BY K. A. HARUTUNIAN, P.E. 59181 ON OCTOBER 16, 2003

WARNING
0 1/2 1
IF THIS BAR DOES NOT MEASURE 1" THEN DRAWING IS NOT TO SCALE

STATE OF TEXAS · K. A. HARUTUNIAN · 59181 · REGISTERED PROFESSIONAL ENGINEER

Dwg. No. RE-14

CITY OF AUSTIN, TEXAS
NORTHEAST INTERIM WASTEWATER TREATMENT PLANT

AERATION BLOWER "OP-PAB-001"
CONTROL SCHEMATIC (SHEET 3 OF 3)

Turner Collie & Braden Inc.
ENGINEERS • PLANNERS • PROJECT MANAGERS

Unit PUBLIC WORKS	Scale NONE	Date OCTOBER 2003	
Designed HEI	Checked HEI	Job No. 052-122094-0008	
Drawn HEI	Approved HEI	Sheet 228/327	

THIS CONFORMED DOCUMENT IS RELEASED FOR THE CONVENIENCE OF THE CONTRACTOR UNDER THE AUTHORITY OF:

K. A. Hartutinian — 11-01-22

K. A. HARUTUNIAN, P.E. — DATE
TX LIC NO. 59181

SEE DISCLAIMER FOR LIMITATIONS OF USE.

CONTRACT DOCUMENTS DATED FEBRUARY 28, 2022, AS PART OF THE BIDDING DOCUMENTS (DRAWINGS AND SPECIFICATIONS) AND SUBSEQUENTLY ISSUED ADDENDA HAVE BEEN MERGED INTO ONE CONFORMING SET OF DOCUMENTS FOR THE CONVENIENCE OF THE CONTRACTOR. IF INCONSISTENCIES OR AMBIGUITIES BETWEEN "CONFORMED" DOCUMENTS AND CONTRACT DOCUMENTS ARE FOUND, THE CONTRACT DOCUMENTS SHALL GOVERN.

This document, and the designs incorporated herein, is an instrument of professional service that has been developed, designed and prepared by Harutunian Engineering, Inc., and is not to be used, in whole or in part, for any other project without giving written notice to Harutunian Engineering, Inc.

REV	DATE	BY	DESCRIPTION
			CONFORMED DOCUMENTS

DESIGNED HEI
DRAWN HEI
CHECKED HEI
DATE NOVEMBER 2022

** ORIGINAL SEALED BY K.A. HARUTUNIAN 02-28-22 TX PE 59181 **

HARUTUNIAN ENGINEERING INCORPORATED
ENGINEERING AND ENVIRONMENTAL CONSULTANTS
8100 CROSS PARK DRIVE
AUSTIN, TEXAS 78754
TBPE REGISTRATION NO. F-2408

carollo®
TBPELS No. F-882

CITY OF AUSTIN
FOUNDED 1839
CITY OF AUSTIN

CITY OF AUSTIN
WILD HORSE RANCH WWTP EXPANSION
DEMOLITION
AERATION BLOWER "OP-PAB-001"
CONTROL WIRING SCHEMATICS - DEMOLITION - 3

VERIFY SCALES
BAR IS ONE INCH ON ORIGINAL DRAWING
0 1"
IF NOT ONE INCH ON THIS SHEET, ADJUST SCALES ACCORDINGLY

JOB NO. 10976A.00
DRAWING NO. 80DN08
SHEET NO. 206 OF 464

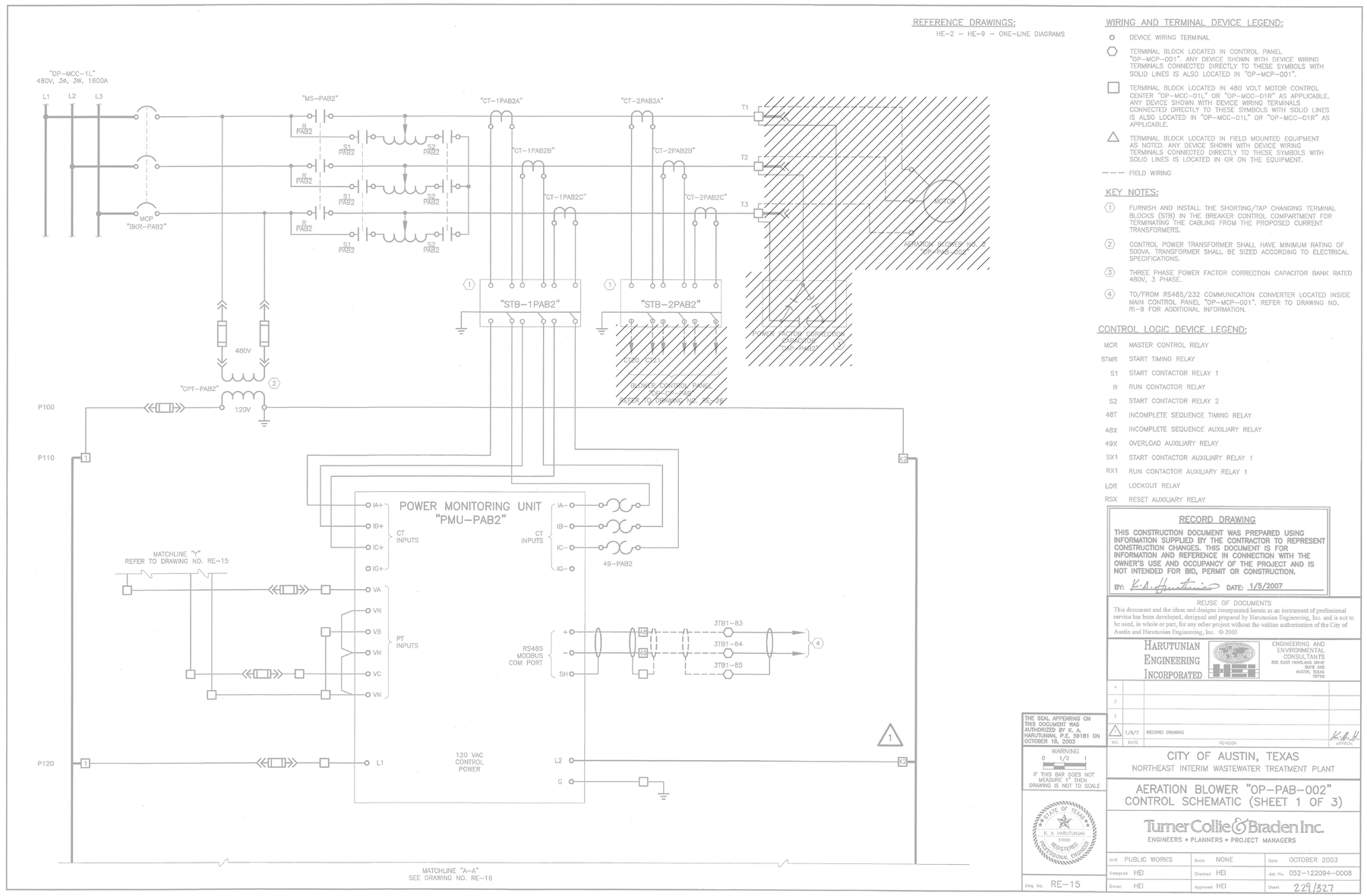

REFERENCE DRAWINGS:

HE-2 – HE-9 – ONE-LINE DIAGRAMS

WIRING AND TERMINAL DEVICE LEGEND:

- ○ DEVICE WIRING TERMINAL
- ⬡ TERMINAL BLOCK LOCATED IN CONTROL PANEL "OP-MCP-001". ANY DEVICE SHOWN WITH DEVICE WIRING TERMINALS CONNECTED DIRECTLY TO THESE SYMBOLS WITH SOLID LINES IS ALSO LOCATED IN "OP-MCP-001".
- □ TERMINAL BLOCK LOCATED IN 480 VOLT MOTOR CONTROL CENTER "OP-MCC-01L" OR "OP-MCC-01R" AS APPLICABLE. ANY DEVICE SHOWN WITH DEVICE WIRING TERMINALS CONNECTED DIRECTLY TO THESE SYMBOLS WITH SOLID LINES IS ALSO LOCATED IN "OP-MCC-01L" OR "OP-MCC-01R" AS APPLICABLE.
- △ TERMINAL BLOCK LOCATED IN FIELD MOUNTED EQUIPMENT AS NOTED. ANY DEVICE SHOWN WITH DEVICE WIRING TERMINALS CONNECTED DIRECTLY TO THESE SYMBOLS WITH SOLID LINES IS LOCATED IN OR ON THE EQUIPMENT.
- – – – FIELD WIRING

KEY NOTES:

1. FURNISH AND INSTALL THE SHORTING/TAP CHANGING TERMINAL BLOCKS (STB) IN THE BREAKER CONTROL COMPARTMENT FOR TERMINATING THE CABLING FROM THE PROPOSED CURRENT TRANSFORMERS.
2. CONTROL POWER TRANSFORMER SHALL HAVE MINIMUM RATING OF 500VA. TRANSFORMER SHALL BE SIZED ACCORDING TO ELECTRICAL SPECIFICATIONS.
3. THREE PHASE POWER FACTOR CORRECTION CAPACITOR BANK RATED 480V, 3 PHASE.
4. TO/FROM RS485/232 COMMUNICATION CONVERTER LOCATED INSIDE MAIN CONTROL PANEL "OP-MCP-001". REFER TO DRAWING NO. RI-9 FOR ADDITIONAL INFORMATION.

CONTROL LOGIC DEVICE LEGEND:

MCR	MASTER CONTROL RELAY
STMR	START TIMING RELAY
S1	START CONTACTOR RELAY 1
R	RUN CONTACTOR RELAY
S2	START CONTACTOR RELAY 2
48T	INCOMPLETE SEQUENCE TIMING RELAY
48X	INCOMPLETE SEQUENCE AUXILIARY RELAY
49X	OVERLOAD AUXILIARY RELAY
SX1	START CONTACTOR AUXILIARY RELAY 1
RX1	RUN CONTACTOR AUXILIARY RELAY 1
LOR	LOCKOUT RELAY
RSX	RESET AUXILIARY RELAY

RECORD DRAWING

THIS CONSTRUCTION DOCUMENT WAS PREPARED USING INFORMATION SUPPLIED BY THE CONTRACTOR TO REPRESENT CONSTRUCTION CHANGES. THIS DOCUMENT IS FOR INFORMATION AND REFERENCE IN CONNECTION WITH THE OWNER'S USE AND OCCUPANCY OF THE PROJECT AND IS NOT INTENDED FOR BID, PERMIT OR CONSTRUCTION.

BY: K.A. Hartunian DATE: 1/5/2007

REUSE OF DOCUMENTS
This document and the ideas and designs incorporated herein as an instrument of professional service has been developed, designed and prepared by Harutunian Engineering, Inc. and is not to be used, in whole or part, for any other project without the written authorization of the City of Austin and Harutunian Engineering, Inc. © 2003

HARUTUNIAN ENGINEERING INCORPORATED
ENGINEERING AND ENVIRONMENTAL CONSULTANTS
305 EAST HUNTLAND DRIVE SUITE 500 AUSTIN, TEXAS 78752

NO.	DATE	REVISION	APPROV.
4			
3			
2			
1	1/8/7	RECORD DRAWING	K.A.H.

THE SEAL APPEARING ON THIS DOCUMENT WAS AUTHORIZED BY K. A. HARUTUNIAN, P.E. 59181 ON OCTOBER 16, 2003

WARNING
0 1/2 1
IF THIS BAR DOES NOT MEASURE 1" THEN DRAWING IS NOT TO SCALE

STATE OF TEXAS · K. A. HARUTUNIAN · 59181 · REGISTERED PROFESSIONAL ENGINEER

Dwg. No. RE-15

CITY OF AUSTIN, TEXAS
NORTHEAST INTERIM WASTEWATER TREATMENT PLANT

AERATION BLOWER "OP-PAB-002"
CONTROL SCHEMATIC (SHEET 1 OF 3)

Turner Collie & Braden Inc.
ENGINEERS • PLANNERS • PROJECT MANAGERS

Unit	PUBLIC WORKS	Scale	NONE
Designed	HEI	Checked	HEI
Drawn	HEI	Approved	HEI
Date	OCTOBER 2003	Job No.	052-122094-0008
Sheet	229/327		

GENERAL NOTES:

1. DISCONNECT AND REMOVE THE EXISTING MAIN CONTROL PANEL INSTRUMENTATION AND CONTROL EQUIPMENT (I.E. SIGNAL ISOLATORS,TERMINAL BLOCKS, INTERCONNECT WIRING, CONTROL DEVICES, ETC.) IN THEIR ENTIRETY. REFER TO WIRING SCHEMATICS FOR ADDITIONAL REQUIREMENTS AND INFORMATION.
2. DISCONNECT AND REMOVE EXISTING FIELD WIRING AND ASSOCIATED FIELD EQUIPMENT IN THEIR ENTIRETY. REFER TO PLAN DRAWINGS FOR ADDITIONAL INFORMATION.

THIS CONFORMED DOCUMENT IS RELEASED FOR THE CONVENIENCE OF THE CONTRACTOR UNDER THE AUTHORITY OF:

K. A. HARUTUNIAN, P.E.
TX LIC NO. 59181

11-01-22
DATE

SEE DISCLAIMER FOR LIMITATIONS OF USE.

CONTRACT DOCUMENTS DATED FEBRUARY 28, 2022, AS PART OF THE BIDDING DOCUMENTS (DRAWINGS AND SPECIFICATIONS) AND SUBSEQUENTLY ISSUED ADDENDA HAVE BEEN MERGED INTO ONE CONFORMING SET OF DOCUMENTS FOR THE CONVENIENCE OF THE CONTRACTOR. IF INCONSISTENCIES OR AMBIGUITIES BETWEEN "CONFORMED" DOCUMENTS AND CONTRACT DOCUMENTS ARE FOUND, THE CONTRACT DOCUMENTS SHALL GOVERN.

This document, and the designs incorporated herein, is an instrument of professional service that has been developed, designed and prepared by Harutunian Engineering, Inc., and is not to be used, in whole or in part, for any other project without giving written notice to Harutunian Engineering, Inc.

REV	DATE	BY	DESCRIPTION
			CONFORMED DOCUMENTS

DESIGNED HEI
DRAWN HEI
CHECKED HEI
DATE NOVEMBER 2022

** ORIGINAL SEALED BY K.A. HARUTUNIAN 02-28-22 TX PE 59181 **

HARUTUNIAN ENGINEERING INCORPORATED
ENGINEERING AND ENVIRONMENTAL CONSULTANTS
8100 CROSS PARK DRIVE AUSTIN, TEXAS 78754
TBPE REGISTRATION NO. F-2408

carollo
TBPELS No. F-882

CITY OF AUSTIN · FOUNDED 1839

CITY OF AUSTIN

CITY OF AUSTIN
WILD HORSE RANCH WWTP EXPANSION
DEMOLITION
AERATION BLOWER "OP-PAB-002"
CONTROL WIRING SCHEMATICS - DEMOLITION - 1

VERIFY SCALES
BAR IS ONE INCH ON ORIGINAL DRAWING
0 1"
IF NOT ONE INCH ON THIS SHEET, ADJUST SCALES ACCORDINGLY

JOB NO. 10976A.00
DRAWING NO. 80DN09
SHEET NO. 207 OF 464

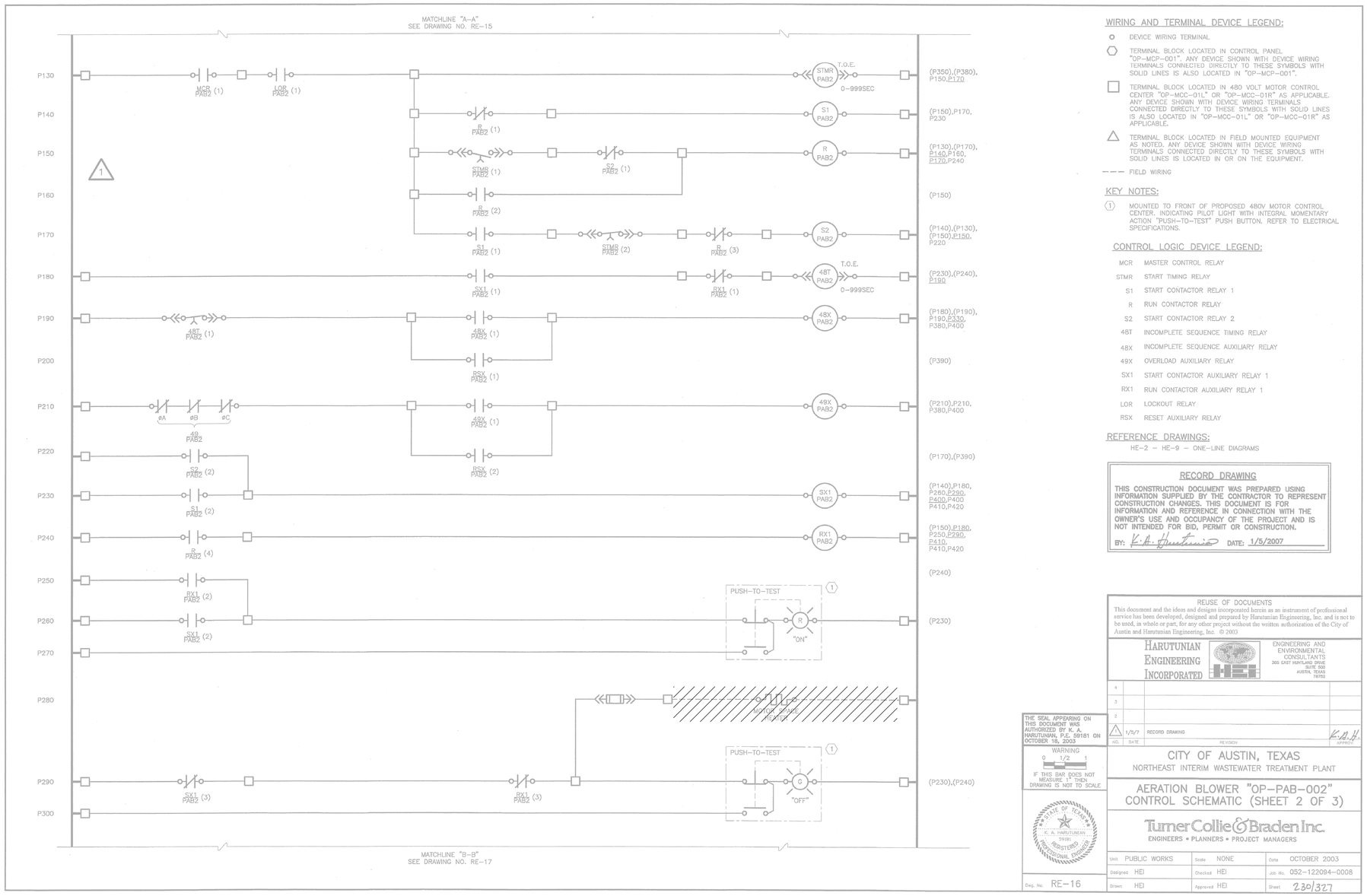

WIRING AND TERMINAL DEVICE LEGEND:

- DEVICE WIRING TERMINAL
- TERMINAL BLOCK LOCATED IN CONTROL PANEL "OP–MCP–001". ANY DEVICE SHOWN WITH DEVICE WIRING TERMINALS CONNECTED DIRECTLY TO THESE SYMBOLS WITH SOLID LINES IS ALSO LOCATED IN "OP–MCP–001".
- TERMINAL BLOCK LOCATED IN 480 VOLT MOTOR CONTROL CENTER "OP–MCC–01L" OR "OP–MCC–01R" AS APPLICABLE. ANY DEVICE SHOWN WITH DEVICE WIRING TERMINALS CONNECTED DIRECTLY TO THESE SYMBOLS WITH SOLID LINES IS ALSO LOCATED IN "OP–MCC–01L" OR "OP–MCC–01R" AS APPLICABLE.
- TERMINAL BLOCK LOCATED IN FIELD MOUNTED EQUIPMENT AS NOTED. ANY DEVICE SHOWN WITH DEVICE WIRING TERMINALS CONNECTED DIRECTLY TO THESE SYMBOLS WITH SOLID LINES IS LOCATED IN OR ON THE EQUIPMENT.
- FIELD WIRING

KEY NOTES:

(1) MOUNTED TO FRONT OF PROPOSED 480V MOTOR CONTROL CENTER. INDICATING PILOT LIGHT WITH INTEGRAL MOMENTARY ACTION "PUSH–TO–TEST" PUSH BUTTON. REFER TO ELECTRICAL SPECIFICATIONS.

CONTROL LOGIC DEVICE LEGEND:

MCR	MASTER CONTROL RELAY
STMR	START TIMING RELAY
S1	START CONTACTOR RELAY 1
R	RUN CONTACTOR RELAY
S2	START CONTACTOR RELAY 2
48T	INCOMPLETE SEQUENCE TIMING RELAY
48X	INCOMPLETE SEQUENCE AUXILIARY RELAY
49X	OVERLOAD AUXILIARY RELAY
SX1	START CONTACTOR AUXILIARY RELAY 1
RX1	RUN CONTACTOR AUXILIARY RELAY 1
LOR	LOCKOUT RELAY
RSX	RESET AUXILIARY RELAY

REFERENCE DRAWINGS:

HE–2 – HE–9 – ONE–LINE DIAGRAMS

RECORD DRAWING

THIS CONSTRUCTION DOCUMENT WAS PREPARED USING INFORMATION SUPPLIED BY THE CONTRACTOR TO REPRESENT CONSTRUCTION CHANGES. THIS DOCUMENT IS FOR INFORMATION AND REFERENCE IN CONNECTION WITH THE OWNER'S USE AND OCCUPANCY OF THE PROJECT AND IS NOT INTENDED FOR BID, PERMIT OR CONSTRUCTION.

BY: K. A. Harutunian DATE: 1/5/2007

REUSE OF DOCUMENTS
This document and the ideas and designs incorporated herein as an instrument of professional service has been developed, designed and prepared by Harutunian Engineering, Inc. and is not to be used, in whole or part, for any other project without the written authorization of the City of Austin and Harutunian Engineering, Inc. © 2003

HARUTUNIAN ENGINEERING INCORPORATED
ENGINEERING AND ENVIRONMENTAL CONSULTANTS
365 EAST HUNTLAND DRIVE SUITE 900 AUSTIN, TEXAS 78752

NO.	DATE	REVISION	APPRVD
4			
3			
2			
1	1/5/7	RECORD DRAWING	K.A.H.

THE SEAL APPEARING ON THIS DOCUMENT WAS AUTHORIZED BY K. A. HARUTUNIAN, P.E. 59181 ON OCTOBER 18, 2003

WARNING
0 1/2 1
IF THIS BAR DOES NOT MEASURE 1" THEN DRAWING IS NOT TO SCALE

STATE OF TEXAS · K. A. HARUTUNIAN · 59181 · REGISTERED · PROFESSIONAL ENGINEER

Dwg. No. RE–16

CITY OF AUSTIN, TEXAS
NORTHEAST INTERIM WASTEWATER TREATMENT PLANT

AERATION BLOWER "OP–PAB–002"
CONTROL SCHEMATIC (SHEET 2 OF 3)

Turner Collie & Braden Inc.
ENGINEERS • PLANNERS • PROJECT MANAGERS

Unit PUBLIC WORKS	Scale NONE	Date OCTOBER 2003	
Designed HEI	Checked HEI	Job No. 052–122094–0008	
Drawn HEI	Approved HEI	Sheet 230/327	

GENERAL NOTES:

1. DISCONNECT AND REMOVE THE EXISTING MAIN CONTROL PANEL INSTRUMENTATION AND CONTROL EQUIPMENT (I.E. SIGNAL ISOLATORS,TERMINAL BLOCKS, INTERCONNECT WIRING, CONTROL DEVICES, ETC.) IN THEIR ENTIRETY. REFER TO WIRING SCHEMATICS FOR ADDITIONAL REQUIREMENTS AND INFORMATION.
2. DISCONNECT AND REMOVE EXISTING FIELD WIRING AND ASSOCIATED FIELD EQUIPMENT IN THEIR ENTIRETY. REFER TO PLAN DRAWINGS FOR ADDITIONAL INFORMATION.

THIS CONFORMED DOCUMENT IS RELEASED FOR THE CONVENIENCE OF THE CONTRACTOR UNDER THE AUTHORITY OF:

K. A. Harutunian — 11-01-22

K. A. HARUTUNIAN, P.E. — DATE
TX LIC NO. 59181

SEE DISCLAIMER FOR LIMITATIONS OF USE.

CONTRACT DOCUMENTS DATED FEBRUARY 28, 2022, AS PART OF THE BIDDING DOCUMENTS (DRAWINGS AND SPECIFICATIONS) AND SUBSEQUENTLY ISSUED ADDENDA HAVE BEEN MERGED INTO ONE CONFORMING SET OF DOCUMENTS FOR THE CONVENIENCE OF THE CONTRACTOR. IF INCONSISTENCIES OR AMBIGUITIES BETWEEN "CONFORMED" DOCUMENTS AND CONTRACT DOCUMENTS ARE FOUND, THE CONTRACT DOCUMENTS SHALL GOVERN.

This document, and the designs incorporated herein, is an instrument of professional service that has been developed, designed and prepared by Harutunian Engineering, Inc., and is not to be used, in whole or in part, for any other project without giving written notice to Harutunian Engineering, Inc.

REV	DATE	BY	DESCRIPTION
			CONFORMED DOCUMENTS

DESIGNED HEI
DRAWN HEI
CHECKED HEI
DATE NOVEMBER 2022

** ORIGINAL SEALED BY K.A. HARUTUNIAN 02-28-22 TX PE 59181 **

HARUTUNIAN ENGINEERING INCORPORATED
ENGINEERING AND ENVIRONMENTAL CONSULTANTS
8100 CROSS PARK DRIVE
AUSTIN, TEXAS 78754
TBPE REGISTRATION NO. F-2408

carollo
TBPELS No. F-882

CITY OF AUSTIN

CITY OF AUSTIN
WILD HORSE RANCH WWTP EXPANSION
DEMOLITION
AERATION BLOWER "OP-PAB-002"
CONTROL WIRING SCHEMATICS - DEMOLITION - 2

VERIFY SCALES
BAR IS ONE INCH ON ORIGINAL DRAWING
0 1"
IF NOT ONE INCH ON THIS SHEET, ADJUST SCALES ACCORDINGLY

JOB NO. 10976A.00
DRAWING NO. 80DN10
SHEET NO. 208 OF 464

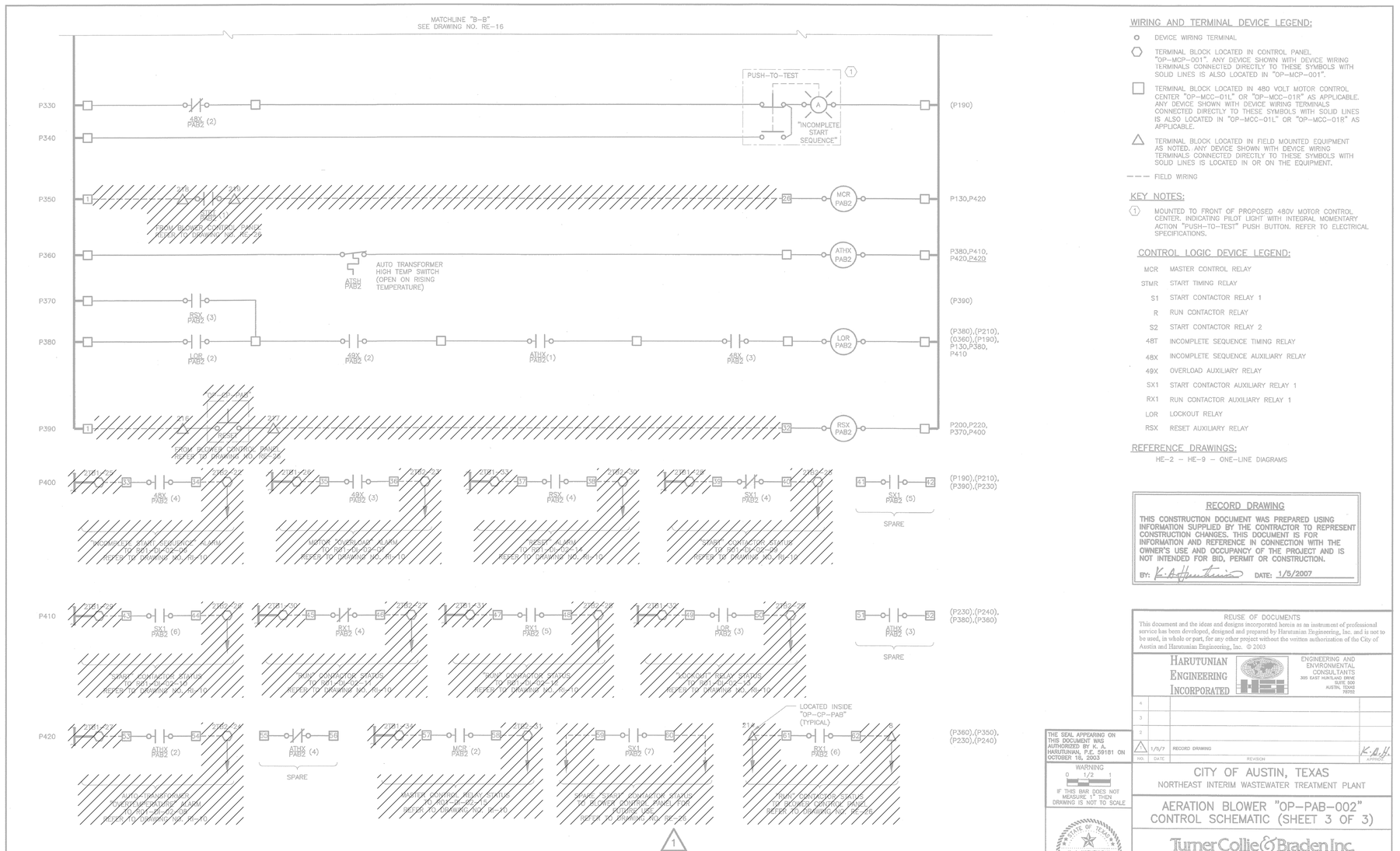

WIRING AND TERMINAL DEVICE LEGEND:

- ○ DEVICE WIRING TERMINAL
- ⬡ TERMINAL BLOCK LOCATED IN CONTROL PANEL "OP-MCP-001". ANY DEVICE SHOWN WITH DEVICE WIRING TERMINALS CONNECTED DIRECTLY TO THESE SYMBOLS WITH SOLID LINES IS ALSO LOCATED IN "OP-MCP-001".
- □ TERMINAL BLOCK LOCATED IN 480 VOLT MOTOR CONTROL CENTER "OP-MCC-01L" OR "OP-MCC-01R" AS APPLICABLE. ANY DEVICE SHOWN WITH DEVICE WIRING TERMINALS CONNECTED DIRECTLY TO THESE SYMBOLS WITH SOLID LINES IS ALSO LOCATED IN "OP-MCC-01L" OR "OP-MCC-01R" AS APPLICABLE.
- △ TERMINAL BLOCK LOCATED IN FIELD MOUNTED EQUIPMENT AS NOTED. ANY DEVICE SHOWN WITH DEVICE WIRING TERMINALS CONNECTED DIRECTLY TO THESE SYMBOLS WITH SOLID LINES IS LOCATED IN OR ON THE EQUIPMENT.
- – – – FIELD WIRING

KEY NOTES:

(1) MOUNTED TO FRONT OF PROPOSED 480V MOTOR CONTROL CENTER. INDICATING PILOT LIGHT WITH INTEGRAL MOMENTARY ACTION "PUSH-TO-TEST" PUSH BUTTON. REFER TO ELECTRICAL SPECIFICATIONS.

CONTROL LOGIC DEVICE LEGEND:

MCR	MASTER CONTROL RELAY
STMR	START TIMING RELAY
S1	START CONTACTOR RELAY 1
R	RUN CONTACTOR RELAY
S2	START CONTACTOR RELAY 2
48T	INCOMPLETE SEQUENCE TIMING RELAY
48X	INCOMPLETE SEQUENCE AUXILIARY RELAY
49X	OVERLOAD AUXILIARY RELAY
SX1	START CONTACTOR AUXILIARY RELAY 1
RX1	RUN CONTACTOR AUXILIARY RELAY 1
LOR	LOCKOUT RELAY
RSX	RESET AUXILIARY RELAY

REFERENCE DRAWINGS:

HE-2 – HE-9 – ONE-LINE DIAGRAMS

RECORD DRAWING

THIS CONSTRUCTION DOCUMENT WAS PREPARED USING INFORMATION SUPPLIED BY THE CONTRACTOR TO REPRESENT CONSTRUCTION CHANGES. THIS DOCUMENT IS FOR INFORMATION AND REFERENCE IN CONNECTION WITH THE OWNER'S USE AND OCCUPANCY OF THE PROJECT AND IS NOT INTENDED FOR BID, PERMIT OR CONSTRUCTION.

BY: K. A. Hartunian DATE: 1/5/2007

GENERAL NOTES:

1. DISCONNECT AND REMOVE THE EXISTING MAIN CONTROL PANEL INSTRUMENTATION AND CONTROL EQUIPMENT (I.E. SIGNAL ISOLATORS,TERMINAL BLOCKS, INTERCONNECT WIRING, CONTROL DEVICES, ETC.) IN THEIR ENTIRETY. REFER TO WIRING SCHEMATICS FOR ADDITIONAL REQUIREMENTS AND INFORMATION. D'd2.
2. DISCONNECT AND REMOVE EXISTING FIELD WIRING AND ASSOCIATED FIELD EQUIPMENT IN THEIR ENTIRETY. REFER TO PLAN DRAWINGS FOR ADDITIONAL INFORMATION.

REUSE OF DOCUMENTS
This document and the ideas and designs incorporated herein as an instrument of professional service has been developed, designed and prepared by Harutunian Engineering, Inc. and is not to be used, in whole or part, for any other project without the written authorization of the City of Austin and Harutunian Engineering, Inc. © 2003

HARUTUNIAN ENGINEERING INCORPORATED
ENGINEERING AND ENVIRONMENTAL CONSULTANTS
305 EAST HUNTLAND DRIVE SUITE 300 AUSTIN, TEXAS 78752

NO.	DATE	REVISION	APPROV.
4			
3			
2			
1	1/5/7	RECORD DRAWING	K.A.H.

THE SEAL APPEARING ON THIS DOCUMENT WAS AUTHORIZED BY K. A. HARUTUNIAN, P.E. 59181 ON OCTOBER 16, 2003

WARNING
0 1/2 1
IF THIS BAR DOES NOT MEASURE 1" THEN DRAWING IS NOT TO SCALE

STATE OF TEXAS · K. A. HARUTUNIAN · 59181 · REGISTERED PROFESSIONAL ENGINEER

Dwg. No. RE-17

CITY OF AUSTIN, TEXAS
NORTHEAST INTERIM WASTEWATER TREATMENT PLANT

AERATION BLOWER "OP-PAB-002"
CONTROL SCHEMATIC (SHEET 3 OF 3)

Turner Collie & Braden Inc.
ENGINEERS • PLANNERS • PROJECT MANAGERS

Unit PUBLIC WORKS	Scale NONE	Date OCTOBER 2003	
Designed HEI	Checked HEI	Job No. 052-122094-0008	
Drawn HEI	Approved HEI	Sheet 231/327	

THIS CONFORMED DOCUMENT IS RELEASED FOR THE CONVENIENCE OF THE CONTRACTOR UNDER THE AUTHORITY OF:

K. A. Harutunian 11-01-22

K. A. HARUTUNIAN, P.E. DATE
TX LIC NO. 59181

SEE DISCLAIMER FOR LIMITATIONS OF USE.

CONTRACT DOCUMENTS DATED FEBRUARY 28, 2022, AS PART OF THE BIDDING DOCUMENTS (DRAWINGS AND SPECIFICATIONS) AND SUBSEQUENTLY ISSUED ADDENDA HAVE BEEN MERGED INTO ONE CONFORMING SET OF DOCUMENTS FOR THE CONVENIENCE OF THE CONTRACTOR. IF INCONSISTENCIES OR AMBIGUITIES BETWEEN "CONFORMED" DOCUMENTS AND CONTRACT DOCUMENTS ARE FOUND, THE CONTRACT DOCUMENTS SHALL GOVERN.

This document, and the designs incorporated herein, is an instrument of professional service that has been developed, designed and prepared by Harutunian Engineering, Inc., and is not to be used, in whole or in part, for any other project without giving written notice to Harutunian Engineering, Inc.

REV	DATE	BY	DESCRIPTION
			CONFORMED DOCUMENTS

DESIGNED HEI
DRAWN HEI
CHECKED HEI
DATE NOVEMBER 2022

** ORIGINAL SEALED BY K.A. HARUTUNIAN 02-28-22 TX PE 59181 **

HARUTUNIAN ENGINEERING INCORPORATED
ENGINEERING AND ENVIRONMENTAL CONSULTANTS
8100 CROSS PARK DRIVE AUSTIN, TEXAS 78754
TBPE REGISTRATION NO. F-2408

carollo® TBPELS No. F-882

CITY OF AUSTIN FOUNDED 1839

CITY OF AUSTIN

CITY OF AUSTIN
WILD HORSE RANCH WWTP EXPANSION
DEMOLITION
AERATION BLOWER "OP-PAB-002"
CONTROL WIRING SCHEMATICS - DEMOLITION - 3

VERIFY SCALES
BAR IS ONE INCH ON ORIGINAL DRAWING
0 1"
IF NOT ONE INCH ON THIS SHEET, ADJUST SCALES ACCORDINGLY

JOB NO. 10976A.00
DRAWING NO. 80DN11
SHEET NO. 209 OF 464

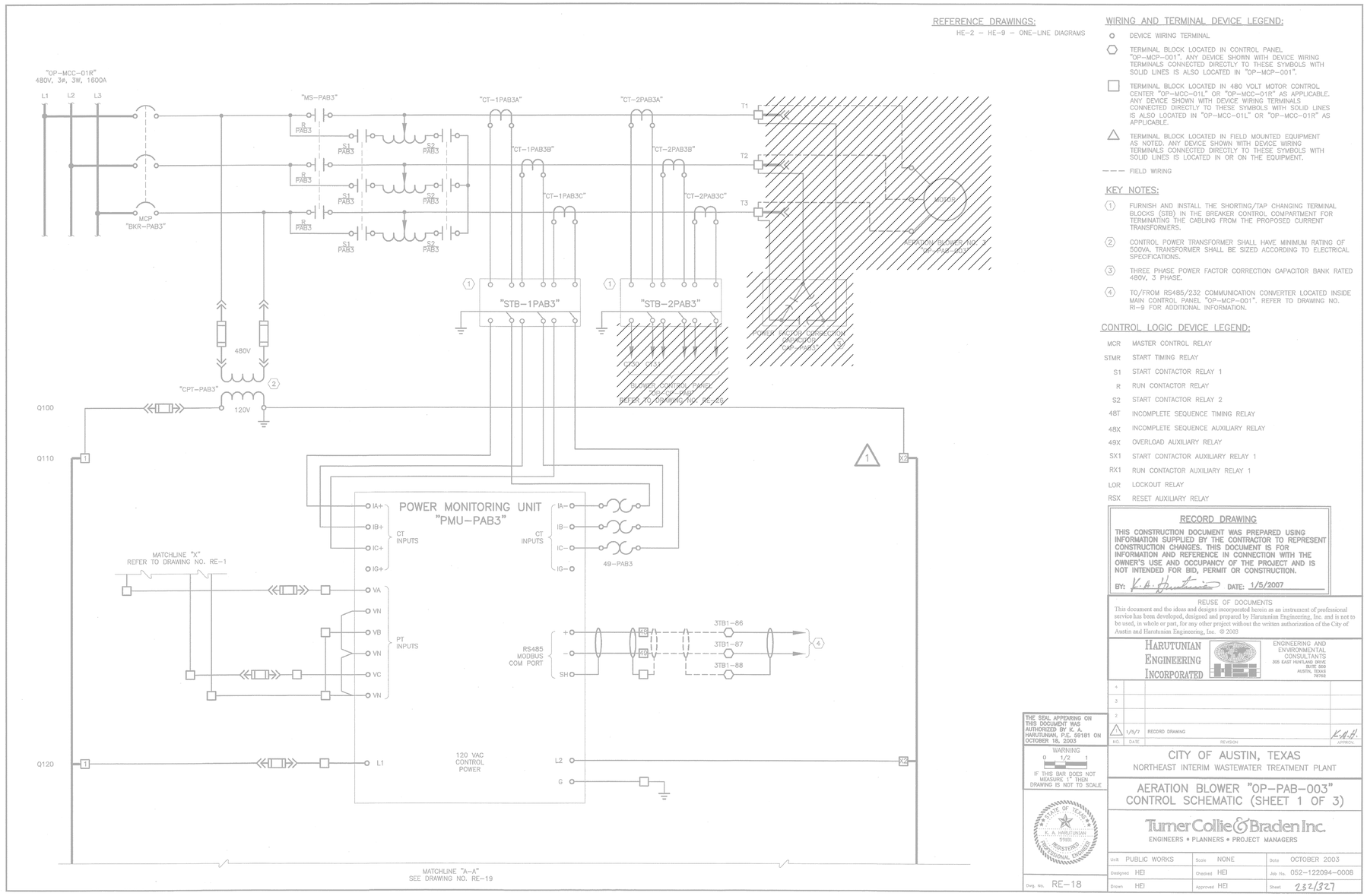

REFFERENCE DRAWINGS:

HE-2 – HE-9 – ONE-LINE DIAGRAMS

WIRING AND TERMINAL DEVICE LEGEND:

- ○ DEVICE WIRING TERMINAL
- ⬡ TERMINAL BLOCK LOCATED IN CONTROL PANEL "OP-MCP-001". ANY DEVICE SHOWN WITH DEVICE WIRING TERMINALS CONNECTED DIRECTLY TO THESE SYMBOLS WITH SOLID LINES IS ALSO LOCATED IN "OP-MCP-001".
- □ TERMINAL BLOCK LOCATED IN 480 VOLT MOTOR CONTROL CENTER "OP-MCC-01L" OR "OP-MCC-01R" AS APPLICABLE. ANY DEVICE SHOWN WITH DEVICE WIRING TERMINALS CONNECTED DIRECTLY TO THESE SYMBOLS WITH SOLID LINES IS ALSO LOCATED IN "OP-MCC-01L" OR "OP-MCC-01R" AS APPLICABLE.
- △ TERMINAL BLOCK LOCATED IN FIELD MOUNTED EQUIPMENT AS NOTED. ANY DEVICE SHOWN WITH DEVICE WIRING TERMINALS CONNECTED DIRECTLY TO THESE SYMBOLS WITH SOLID LINES IS LOCATED IN OR ON THE EQUIPMENT.
- – – – FIELD WIRING

KEY NOTES:

1. FURNISH AND INSTALL THE SHORTING/TAP CHANGING TERMINAL BLOCKS (STB) IN THE BREAKER CONTROL COMPARTMENT FOR TERMINATING THE CABLING FROM THE PROPOSED CURRENT TRANSFORMERS.
2. CONTROL POWER TRANSFORMER SHALL HAVE MINIMUM RATING OF 500VA. TRANSFORMER SHALL BE SIZED ACCORDING TO ELECTRICAL SPECIFICATIONS.
3. THREE PHASE POWER FACTOR CORRECTION CAPACITOR BANK RATED 480V, 3 PHASE.
4. TO/FROM RS485/232 COMMUNICATION CONVERTER LOCATED INSIDE MAIN CONTROL PANEL "OP-MCP-001". REFER TO DRAWING NO. RI-9 FOR ADDITIONAL INFORMATION.

CONTROL LOGIC DEVICE LEGEND:

MCR	MASTER CONTROL RELAY
STMR	START TIMING RELAY
S1	START CONTACTOR RELAY 1
R	RUN CONTACTOR RELAY
S2	START CONTACTOR RELAY 2
48T	INCOMPLETE SEQUENCE TIMING RELAY
48X	INCOMPLETE SEQUENCE AUXILIARY RELAY
49X	OVERLOAD AUXILIARY RELAY
SX1	START CONTACTOR AUXILIARY RELAY 1
RX1	RUN CONTACTOR AUXILIARY RELAY 1
LOR	LOCKOUT RELAY
RSX	RESET AUXILIARY RELAY

RECORD DRAWING

THIS CONSTRUCTION DOCUMENT WAS PREPARED USING INFORMATION SUPPLIED BY THE CONTRACTOR TO REPRESENT CONSTRUCTION CHANGES. THIS DOCUMENT IS FOR INFORMATION AND REFERENCE IN CONNECTION WITH THE OWNER'S USE AND OCCUPANCY OF THE PROJECT AND IS NOT INTENDED FOR BID, PERMIT OR CONSTRUCTION.

BY: K.A. Harutunian DATE: 1/5/2007

REUSE OF DOCUMENTS
This document and the ideas and designs incorporated herein as an instrument of professional service has been developed, designed and prepared by Harutunian Engineering, Inc. and is not to be used, in whole or part, for any other project without the written authorization of the City of Austin and Harutunian Engineering, Inc. © 2003

HARUTUNIAN ENGINEERING INCORPORATED
ENGINEERING AND ENVIRONMENTAL CONSULTANTS
305 EAST HUNTLAND DRIVE
SUITE 300
AUSTIN, TEXAS
78752

NO.	DATE	REVISION	APPROV.
4			
3			
2			
1	1/5/7	RECORD DRAWING	K.A.H.

THE SEAL APPEARING ON THIS DOCUMENT WAS AUTHORIZED BY K. A. HARUTUNIAN, P.E. 59181 ON OCTOBER 15, 2003

WARNING
0 1/2 1
IF THIS BAR DOES NOT MEASURE 1" THEN DRAWING IS NOT TO SCALE

STATE OF TEXAS · K. A. HARUTUNIAN · 59181 · REGISTERED PROFESSIONAL ENGINEER

Dwg. No. RE-18

CITY OF AUSTIN, TEXAS
NORTHEAST INTERIM WASTEWATER TREATMENT PLANT

AERATION BLOWER "OP-PAB-003"
CONTROL SCHEMATIC (SHEET 1 OF 3)

Turner Collie & Braden Inc.
ENGINEERS • PLANNERS • PROJECT MANAGERS

Unit PUBLIC WORKS	Scale NONE	Date OCTOBER 2003	
Designed HEI	Checked HEI	Job No. 052-122094-0008	
Drawn HEI	Approved HEI	Sheet 232/327	

GENERAL NOTES:

1. DISCONNECT AND REMOVE THE EXISTING MAIN CONTROL PANEL INSTRUMENTATION AND CONTROL EQUIPMENT (I.E. SIGNAL ISOLATORS,TERMINAL BLOCKS, INTERCONNECT WIRING, CONTROL DEVICES, ETC.) IN THEIR ENTIRETY. REFER TO WIRING SCHEMATICS FOR ADDITIONAL REQUIREMENTS AND INFORMATION.
2. DISCONNECT AND REMOVE EXISTING FIELD WIRING AND ASSOCIATED FIELD EQUIPMENT IN THEIR ENTIRETY. REFER TO PLAN DRAWINGS FOR ADDITIONAL INFORMATION.

THIS CONFORMED DOCUMENT IS RELEASED FOR THE CONVENIENCE OF THE CONTRACTOR UNDER THE AUTHORITY OF:

K. A. HARUTUNIAN, P.E.
TX LIC NO. 59181

11-01-22
DATE

SEE DISCLAIMER FOR LIMITATIONS OF USE.

CONTRACT DOCUMENTS DATED FEBRUARY 28, 2022, AS PART OF THE BIDDING DOCUMENTS (DRAWINGS AND SPECIFICATIONS) AND SUBSEQUENTLY ISSUED ADDENDA HAVE BEEN MERGED INTO ONE CONFORMING SET OF DOCUMENTS FOR THE CONVENIENCE OF THE CONTRACTOR. IF INCONSISTENCIES OR AMBIGUITIES BETWEEN "CONFORMED" DOCUMENTS AND CONTRACT DOCUMENTS ARE FOUND, THE CONTRACT DOCUMENTS SHALL GOVERN.

This document, and the designs incorporated herein, is an instrument of professional service that has been developed, designed and prepared by Harutunian Engineering, Inc., and is not to be used, in whole or in part, for any other project without giving written notice to Harutunian Engineering, Inc.

REV	DATE	BY	DESCRIPTION
			CONFORMED DOCUMENTS

DESIGNED HEI
DRAWN HEI
CHECKED HEI
DATE NOVEMBER 2022

** ORIGINAL SEALED BY K.A. HARUTUNIAN 02-28-22 TX PE 59181 **

HARUTUNIAN ENGINEERING INCORPORATED
ENGINEERING AND ENVIRONMENTAL CONSULTANTS
8100 CROSS PARK DRIVE
AUSTIN, TEXAS 78754
TBPE REGISTRATION NO. F-2408

carollo
TBPELS No. F-882

CITY OF AUSTIN · FOUNDED 1839

CITY OF AUSTIN

CITY OF AUSTIN
WILD HORSE RANCH WWTP EXPANSION
DEMOLITION
AERATION BLOWER "OP-PAB-003"
CONTROL WIRING SCHEMATICS - DEMOLITION - 1

VERIFY SCALES
BAR IS ONE INCH ON ORIGINAL DRAWING
0 1"
IF NOT ONE INCH ON THIS SHEET, ADJUST SCALES ACCORDINGLY

JOB NO. 10976A.00
DRAWING NO. 80DN12
SHEET NO. 210 OF 464

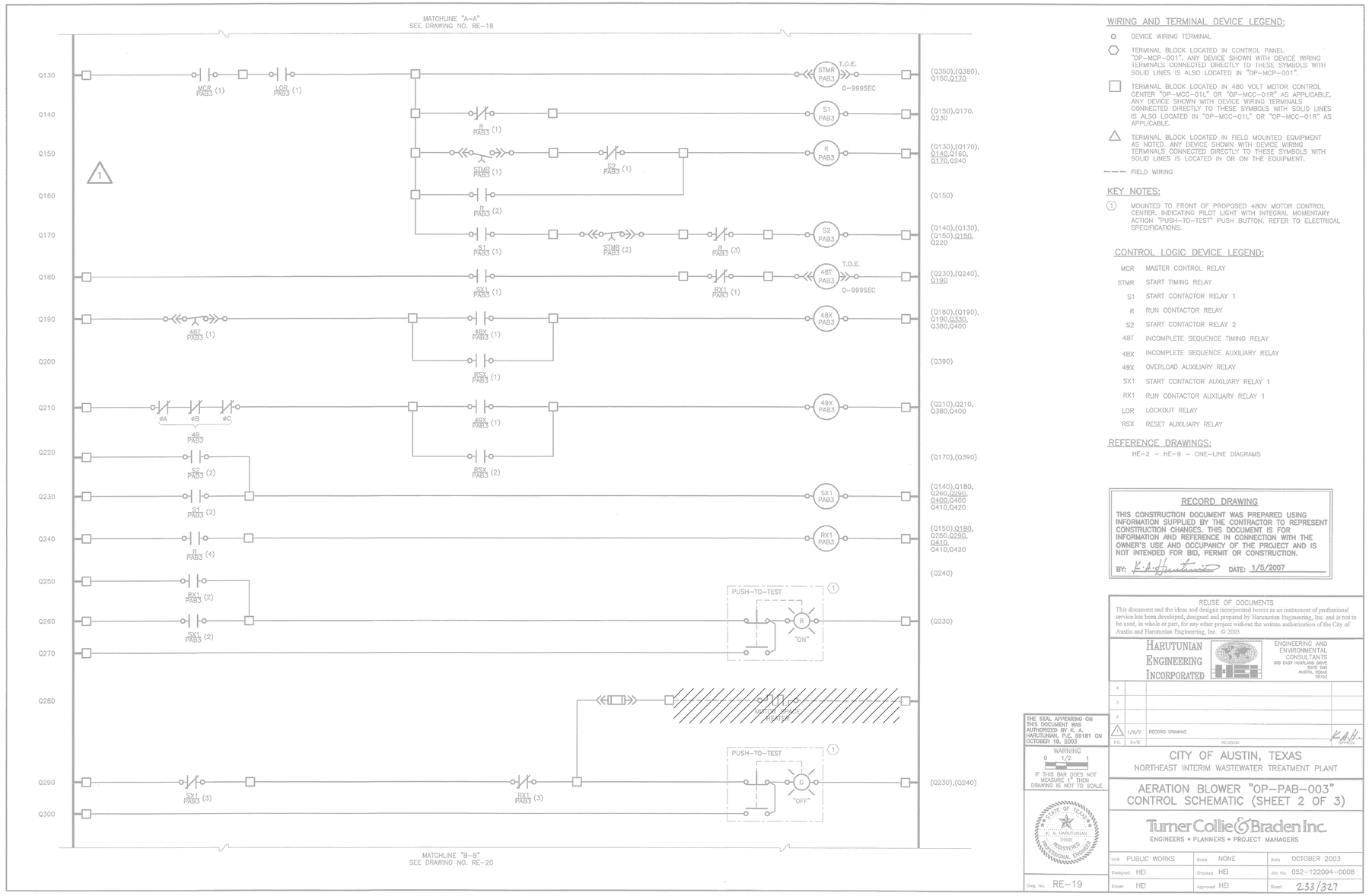

WIRING AND TERMINAL DEVICE LEGEND:

- DEVICE WIRING TERMINAL
- TERMINAL BLOCK LOCATED IN CONTROL PANEL "OP-MCP-001". ANY DEVICE SHOWN WITH DEVICE WIRING TERMINALS CONNECTED DIRECTLY TO THESE SYMBOLS WITH SOLID LINES IS ALSO LOCATED IN "OP-MCP-001".
- TERMINAL BLOCK LOCATED IN 480 VOLT MOTOR CONTROL CENTER "OP-MCC-01L" OR "OP-MCC-01R" AS APPLICABLE. ANY DEVICE SHOWN WITH DEVICE WIRING TERMINALS CONNECTED DIRECTLY TO THESE SYMBOLS WITH SOLID LINES IS ALSO LOCATED IN "OP-MCC-01L" OR "OP-MCC-01R" AS APPLICABLE.
- TERMINAL BLOCK LOCATED IN FIELD MOUNTED EQUIPMENT AS NOTED. ANY DEVICE SHOWN WITH DEVICE WIRING TERMINALS CONNECTED DIRECTLY TO THESE SYMBOLS WITH SOLID LINES IS LOCATED IN OR ON THE EQUIPMENT.
- FIELD WIRING

KEY NOTES:

(1) MOUNTED TO FRONT OF PROPOSED 480V MOTOR CONTROL CENTER. INDICATING PILOT LIGHT WITH INTEGRAL MOMENTARY ACTION "PUSH-TO-TEST" PUSH BUTTON. REFER TO ELECTRICAL SPECIFICATIONS.

CONTROL LOGIC DEVICE LEGEND:

MCR	MASTER CONTROL RELAY
STMR	START TIMING RELAY
S1	START CONTACTOR RELAY 1
R	RUN CONTACTOR RELAY
S2	START CONTACTOR RELAY 2
48T	INCOMPLETE SEQUENCE TIMING RELAY
48X	INCOMPLETE SEQUENCE AUXILIARY RELAY
49X	OVERLOAD AUXILIARY RELAY
SX1	START CONTACTOR AUXILIARY RELAY 1
RX1	RUN CONTACTOR AUXILIARY RELAY 1
LOR	LOCKOUT RELAY
RSX	RESET AUXILIARY RELAY

REFERENCE DRAWINGS:

HE-2 – HE-9 – ONE-LINE DIAGRAMS

RECORD DRAWING

THIS CONSTRUCTION DOCUMENT WAS PREPARED USING INFORMATION SUPPLIED BY THE CONTRACTOR TO REPRESENT CONSTRUCTION CHANGES. THIS DOCUMENT IS FOR INFORMATION AND REFERENCE IN CONNECTION WITH THE OWNER'S USE AND OCCUPANCY OF THE PROJECT AND IS NOT INTENDED FOR BID, PERMIT OR CONSTRUCTION.

BY: K.A. Harutunian DATE: 1/5/2007

REUSE OF DOCUMENTS
This document and the ideas and designs incorporated herein as an instrument of professional service has been developed, designed and prepared by Harutunian Engineering, Inc. and is not to be used, in whole or part, for any other project without the written authorization of the City of Austin and Harutunian Engineering, Inc. © 2003

HARUTUNIAN ENGINEERING INCORPORATED
ENGINEERING AND ENVIRONMENTAL CONSULTANTS
305 EAST HUNTLAND DRIVE SUITE 500 AUSTIN, TEXAS 78752

NO.	DATE	REVISION	APPROVED
4			
3			
2			
1	1/5/7	RECORD DRAWING	K.A.H.

THE SEAL APPEARING ON THIS DOCUMENT WAS AUTHORIZED BY K. A. HARUTUNIAN, P.E. 59181 ON OCTOBER 16, 2003

WARNING 0 1/2 1 IF THIS BAR DOES NOT MEASURE 1" THEN DRAWING IS NOT TO SCALE

STATE OF TEXAS K. A. HARUTUNIAN 59181 REGISTERED PROFESSIONAL ENGINEER

Dwg. No. RE-19

CITY OF AUSTIN, TEXAS
NORTHEAST INTERIM WASTEWATER TREATMENT PLANT

AERATION BLOWER "OP-PAB-003"
CONTROL SCHEMATIC (SHEET 2 OF 3)

Turner Collie & Braden Inc.
ENGINEERS • PLANNERS • PROJECT MANAGERS

Unit PUBLIC WORKS	Scale NONE	Date OCTOBER 2003	
Designed HEI	Checked HEI	Job No. 052-122094-0008	
Drawn HEI	Approved HEI	Sheet 233/327	

GENERAL NOTES:

1. DISCONNECT AND REMOVE THE EXISTING MAIN CONTROL PANEL INSTRUMENTATION AND CONTROL EQUIPMENT (I.E. SIGNAL ISOLATORS,TERMINAL BLOCKS, INTERCONNECT WIRING, CONTROL DEVICES, ETC.) IN THEIR ENTIRETY. REFER TO WIRING SCHEMATICS FOR ADDITIONAL REQUIREMENTS AND INFORMATION.
2. DISCONNECT AND REMOVE EXISTING FIELD WIRING AND ASSOCIATED FIELD EQUIPMENT IN THEIR ENTIRETY. REFER TO PLAN DRAWINGS FOR ADDITIONAL INFORMATION.

THIS CONFORMED DOCUMENT IS RELEASED FOR THE CONVENIENCE OF THE CONTRACTOR UNDER THE AUTHORITY OF:

K. A. HARUTUNIAN, P.E. 11-01-22
TX LIC NO. 59181 DATE

SEE DISCLAIMER FOR LIMITATIONS OF USE.

CONTRACT DOCUMENTS DATED FEBRUARY 28, 2022, AS PART OF THE BIDDING DOCUMENTS (DRAWINGS AND SPECIFICATIONS) AND SUBSEQUENTLY ISSUED ADDENDA HAVE BEEN MERGED INTO ONE CONFORMING SET OF DOCUMENTS FOR THE CONVENIENCE OF THE CONTRACTOR. IF INCONSISTENCIES OR AMBIGUITIES BETWEEN "CONFORMED" DOCUMENTS AND CONTRACT DOCUMENTS ARE FOUND, THE CONTRACT DOCUMENTS SHALL GOVERN.

This document, and the designs incorporated herein, is an instrument of professional service that has been developed, designed and prepared by Harutunian Engineering, Inc., and is not to be used, in whole or in part, for any other project without giving written notice to Harutunian Engineering, Inc.

REV	DATE	BY	DESCRIPTION
			CONFORMED DOCUMENTS

DESIGNED HEI
DRAWN HEI
CHECKED HEI
DATE NOVEMBER 2022

** ORIGINAL SEALED BY K.A. HARUTUNIAN 02-28-22 TX PE 59181 **

HARUTUNIAN ENGINEERING INCORPORATED
ENGINEERING AND ENVIRONMENTAL CONSULTANTS
8100 CROSS PARK DRIVE AUSTIN, TEXAS 78754
TBPE REGISTRATION NO. F-2408

carollo
TBPELS No. F-882

CITY OF AUSTIN FOUNDED 1839

CITY OF AUSTIN

CITY OF AUSTIN
WILD HORSE RANCH WWTP EXPANSION
DEMOLITION
AERATION BLOWER "OP-PAB-003"
CONTROL WIRING SCHEMATICS - DEMOLITION - 2

VERIFY SCALES
BAR IS ONE INCH ON ORIGINAL DRAWING
0 1"
IF NOT ONE INCH ON THIS SHEET, ADJUST SCALES ACCORDINGLY

JOB NO. 10976A.00
DRAWING NO. 80DN13
SHEET NO. 211 OF 464

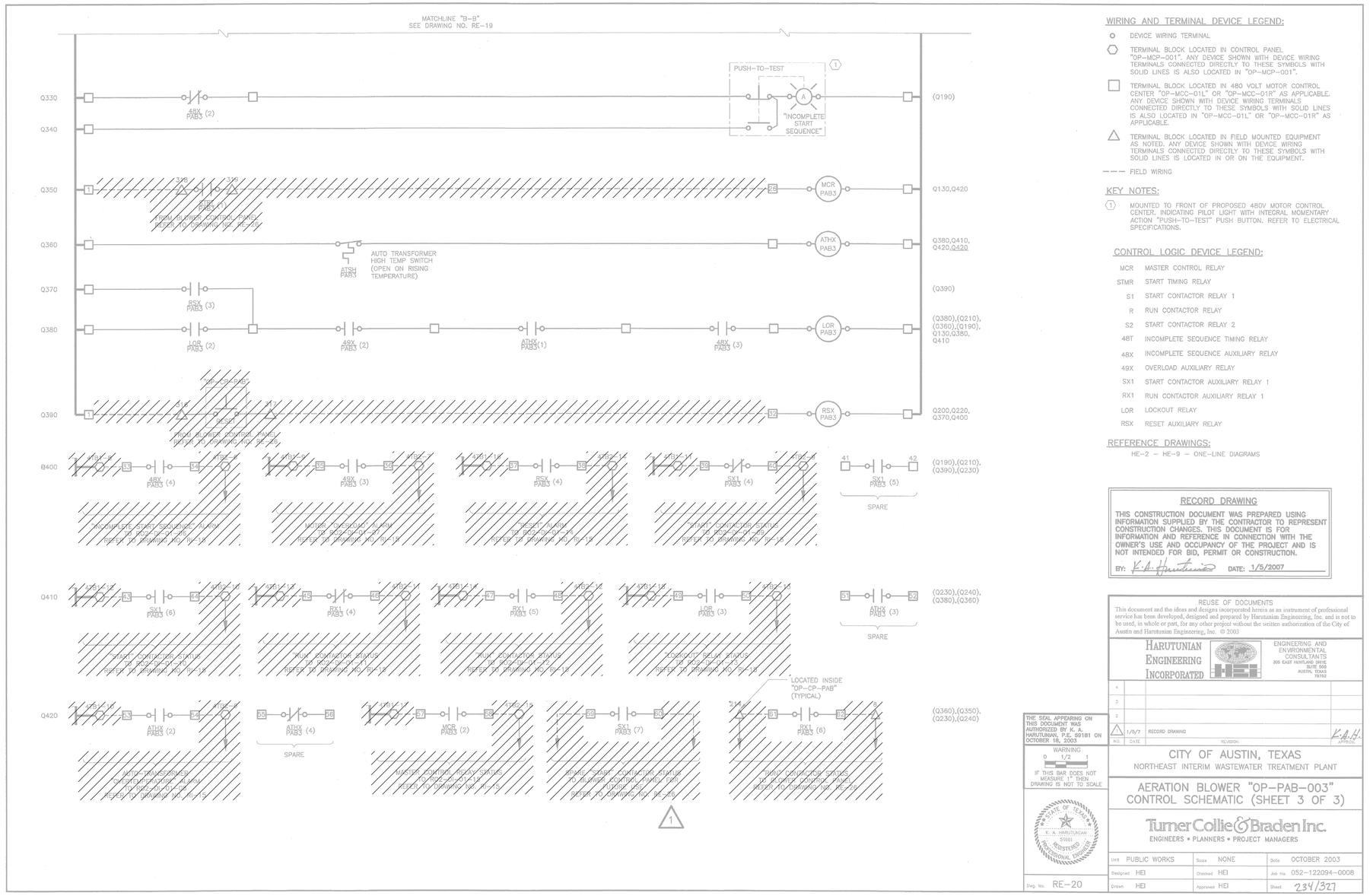

WIRING AND TERMINAL DEVICE LEGEND:

- ○ DEVICE WIRING TERMINAL
- ⬡ TERMINAL BLOCK LOCATED IN CONTROL PANEL "OP-MCP-001". ANY DEVICE SHOWN WITH DEVICE WIRING TERMINALS CONNECTED DIRECTLY TO THESE SYMBOLS WITH SOLID LINES IS ALSO LOCATED IN "OP-MCP-001".
- □ TERMINAL BLOCK LOCATED IN 480 VOLT MOTOR CONTROL CENTER "OP-MCC-01L" OR "OP-MCC-01R" AS APPLICABLE. ANY DEVICE SHOWN WITH DEVICE WIRING TERMINALS CONNECTED DIRECTLY TO THESE SYMBOLS WITH SOLID LINES IS ALSO LOCATED IN "OP-MCC-01L" OR "OP-MCC-01R" AS APPLICABLE.
- △ TERMINAL BLOCK LOCATED IN FIELD MOUNTED EQUIPMENT AS NOTED. ANY DEVICE SHOWN WITH DEVICE WIRING TERMINALS CONNECTED DIRECTLY TO THESE SYMBOLS WITH SOLID LINES IS LOCATED IN OR ON THE EQUIPMENT.
- — — FIELD WIRING

KEY NOTES:

(1) MOUNTED TO FRONT OF PROPOSED 480V MOTOR CONTROL CENTER. INDICATING PILOT LIGHT WITH INTEGRAL MOMENTARY ACTION "PUSH-TO-TEST" PUSH BUTTON. REFER TO ELECTRICAL SPECIFICATIONS.

CONTROL LOGIC DEVICE LEGEND:

MCR	MASTER CONTROL RELAY
STMR	START TIMING RELAY
S1	START CONTACTOR RELAY 1
R	RUN CONTACTOR RELAY
S2	START CONTACTOR RELAY 2
48T	INCOMPLETE SEQUENCE TIMING RELAY
48X	INCOMPLETE SEQUENCE AUXILIARY RELAY
49X	OVERLOAD AUXILIARY RELAY
SX1	START CONTACTOR AUXILIARY RELAY 1
RX1	RUN CONTACTOR AUXILIARY RELAY 1
LOR	LOCKOUT RELAY
RSX	RESET AUXILIARY RELAY

REFERENCE DRAWINGS:

HE-2 – HE-9 – ONE-LINE DIAGRAMS

GENERAL NOTES:

1. DISCONNECT AND REMOVE THE EXISTING MAIN CONTROL PANEL INSTRUMENTATION AND CONTROL EQUIPMENT (I.E. SIGNAL ISOLATORS,TERMINAL BLOCKS, INTERCONNECT WIRING, CONTROL DEVICES, ETC.) IN THEIR ENTIRETY. REFER TO WIRING SCHEMATICS FOR ADDITIONAL REQUIREMENTS AND INFORMATION.
2. DISCONNECT AND REMOVE EXISTING FIELD WIRING AND ASSOCIATED FIELD EQUIPMENT IN THEIR ENTIRETY. REFER TO PLAN DRAWINGS FOR ADDITIONAL INFORMATION.

RECORD DRAWING

THIS CONSTRUCTION DOCUMENT WAS PREPARED USING INFORMATION SUPPLIED BY THE CONTRACTOR TO REPRESENT CONSTRUCTION CHANGES. THIS DOCUMENT IS FOR INFORMATION AND REFERENCE IN CONNECTION WITH THE OWNER'S USE AND OCCUPANCY OF THE PROJECT AND IS NOT INTENDED FOR BID, PERMIT OR CONSTRUCTION.

BY: K.A. Harutunian DATE: 1/5/2007

REUSE OF DOCUMENTS
This document and the ideas and designs incorporated herein as an instrument of professional service has been developed, designed and prepared by Harutunian Engineering, Inc. and is not to be used, in whole or part, for any other project without the written authorization of the City of Austin and Harutunian Engineering, Inc. © 2003

HARUTUNIAN ENGINEERING INCORPORATED
ENGINEERING AND ENVIRONMENTAL CONSULTANTS
305 EAST HANDLING DRIVE, SUITE 500
AUSTIN, TEXAS 78752

NO.	DATE	REVISION	APPRV.
4			
3			
2			
1	1/5/7	RECORD DRAWING	K.A.H.

THE SEAL APPEARING ON THIS DOCUMENT WAS AUTHORIZED BY K. A. HARUTUNIAN, P.E. 59181 ON OCTOBER 18, 2003

WARNING
0 1/2 1
IF THIS BAR DOES NOT MEASURE 1" THEN DRAWING IS NOT TO SCALE.

STATE OF TEXAS · K. A. HARUTUNIAN · 59181 · REGISTERED · PROFESSIONAL ENGINEER

Dwg. No. RE-20

CITY OF AUSTIN, TEXAS
NORTHEAST INTERIM WASTEWATER TREATMENT PLANT

AERATION BLOWER "OP-PAB-003"
CONTROL SCHEMATIC (SHEET 3 OF 3)

Turner Collie & Braden Inc.
ENGINEERS • PLANNERS • PROJECT MANAGERS

Unit PUBLIC WORKS	Scale NONE	Date OCTOBER 2003	
Designed HEI	Checked HEI	Job No. 052-122094-0008	
Drawn HEI	Approved HEI	Sheet 234/327	

THIS CONFORMED DOCUMENT IS RELEASED FOR THE CONVENIENCE OF THE CONTRACTOR UNDER THE AUTHORITY OF:

K. A. HARUTUNIAN, P.E.
TX LIC NO. 59181

11-01-22
DATE

SEE DISCLAIMER FOR LIMITATIONS OF USE.

CONTRACT DOCUMENTS DATED FEBRUARY 28, 2022, AS PART OF THE BIDDING DOCUMENTS (DRAWINGS AND SPECIFICATIONS) AND SUBSEQUENTLY ISSUED ADDENDA HAVE BEEN MERGED INTO ONE CONFORMING SET OF DOCUMENTS FOR THE CONVENIENCE OF THE CONTRACTOR. IF INCONSISTENCIES OR AMBIGUITIES BETWEEN "CONFORMED" DOCUMENTS AND CONTRACT DOCUMENTS ARE FOUND, THE CONTRACT DOCUMENTS SHALL GOVERN.

This document, and the designs incorporated herein, is an instrument of professional service that has been developed, designed and prepared by Harutunian Engineering, Inc., and is not to be used, in whole or in part, for any other project without giving written notice to Harutunian Engineering, Inc.

REV	DATE	BY	DESCRIPTION
			CONFORMED DOCUMENTS

DESIGNED HEI
DRAWN HEI
CHECKED HEI
DATE NOVEMBER 2022

** ORIGINAL SEALED BY K.A. HARUTUNIAN 02-28-22 TX PE 59181 **

HARUTUNIAN ENGINEERING INCORPORATED
ENGINEERING AND ENVIRONMENTAL CONSULTANTS
8100 CROSS PARK DRIVE
AUSTIN, TEXAS 78754
TBPE REGISTRATION NO. F-2408

carollo
TBPELS No. F-882

CITY OF AUSTIN
FOUNDED 1839

CITY OF AUSTIN

CITY OF AUSTIN
WILD HORSE RANCH WWTP EXPANSION
DEMOLITION
AERATION BLOWER "OP-PAB-003"
CONTROL WIRING SCHEMATICS - DEMOLITION - 3

VERIFY SCALES
BAR IS ONE INCH ON ORIGINAL DRAWING
0 1"
IF NOT ONE INCH ON THIS SHEET, ADJUST SCALES ACCORDINGLY

JOB NO. 10976A.00
DRAWING NO. 80DN14
SHEET NO. 212 OF 464

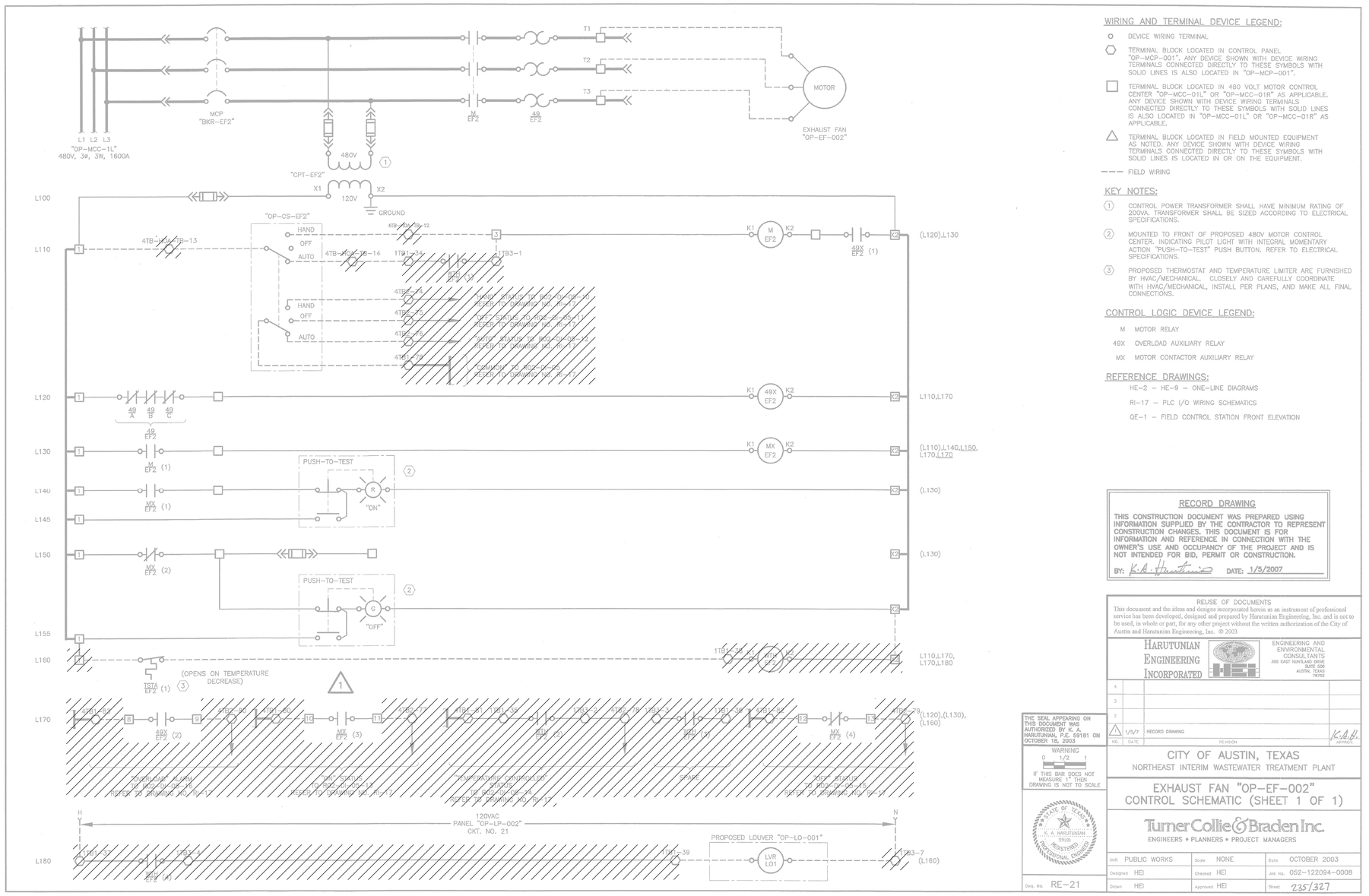

GENERAL NOTES:

1. DISCONNECT AND REMOVE THE EXISTING MAIN CONTROL PANEL INSTRUMENTATION AND CONTROL EQUIPMENT (I.E. SIGNAL ISOLATORS,TERMINAL BLOCKS, INTERCONNECT WIRING, CONTROL DEVICES, ETC.) IN THEIR ENTIRETY. REFER TO WIRING SCHEMATICS FOR ADDITIONAL REQUIREMENTS AND INFORMATION.
2. DISCONNECT AND REMOVE EXISTING FIELD WIRING AND ASSOCIATED FIELD EQUIPMENT IN THEIR ENTIRETY. REFER TO PLAN DRAWINGS FOR ADDITIONAL INFORMATION.

WIRING AND TERMINAL DEVICE LEGEND:

- ○ DEVICE WIRING TERMINAL
- ⬡ TERMINAL BLOCK LOCATED IN CONTROL PANEL "OP-MCP-001". ANY DEVICE SHOWN WITH DEVICE WIRING TERMINALS CONNECTED DIRECTLY TO THESE SYMBOLS WITH SOLID LINES IS ALSO LOCATED IN "OP-MCP-001".
- □ TERMINAL BLOCK LOCATED IN 480 VOLT MOTOR CONTROL CENTER "OP-MCC-01L" OR "OP-MCC-01R" AS APPLICABLE. ANY DEVICE SHOWN WITH DEVICE WIRING TERMINALS CONNECTED DIRECTLY TO THESE SYMBOLS WITH SOLID LINES IS ALSO LOCATED IN "OP-MCC-01L" OR "OP-MCC-01R" AS APPLICABLE.
- △ TERMINAL BLOCK LOCATED IN FIELD MOUNTED EQUIPMENT AS NOTED. ANY DEVICE SHOWN WITH DEVICE WIRING TERMINALS CONNECTED DIRECTLY TO THESE SYMBOLS WITH SOLID LINES IS LOCATED IN OR ON THE EQUIPMENT.
- – – – FIELD WIRING

KEY NOTES:

1. CONTROL POWER TRANSFORMER SHALL HAVE MINIMUM RATING OF 200VA. TRANSFORMER SHALL BE SIZED ACCORDING TO ELECTRICAL SPECIFICATIONS.
2. MOUNTED TO FRONT OF PROPOSED 480V MOTOR CONTROL CENTER. INDICATING PILOT LIGHT WITH INTEGRAL MOMENTARY ACTION "PUSH-TO-TEST" PUSH BUTTON. REFER TO ELECTRICAL SPECIFICATIONS.
3. PROPOSED THERMOSTAT AND TEMPERATURE LIMITER ARE FURNISHED BY HVAC/MECHANICAL. CLOSELY AND CAREFULLY COORDINATE WITH HVAC/MECHANICAL, INSTALL PER PLANS, AND MAKE ALL FINAL CONNECTIONS.

CONTROL LOGIC DEVICE LEGEND:

M	MOTOR RELAY
49X	OVERLOAD AUXILIARY RELAY
MX	MOTOR CONTACTOR AUXILIARY RELAY

REFERENCE DRAWINGS:

HE-2 – HE-9 – ONE-LINE DIAGRAMS

RI-17 – PLC I/O WIRING SCHEMATICS

QE-1 – FIELD CONTROL STATION FRONT ELEVATION

RECORD DRAWING

THIS CONSTRUCTION DOCUMENT WAS PREPARED USING INFORMATION SUPPLIED BY THE CONTRACTOR TO REPRESENT CONSTRUCTION CHANGES. THIS DOCUMENT IS FOR INFORMATION AND REFERENCE IN CONNECTION WITH THE OWNER'S USE AND OCCUPANCY OF THE PROJECT AND IS NOT INTENDED FOR BID, PERMIT OR CONSTRUCTION.

BY: K.A. Harutunian DATE: 1/5/2007

REUSE OF DOCUMENTS
This document and the ideas and designs incorporated herein as an instrument of professional service has been developed, designed and prepared by Harutunian Engineering, Inc. and is not to be used, in whole or part, for any other project without the written authorization of the City of Austin and Harutunian Engineering, Inc. © 2003

HARUTUNIAN ENGINEERING INCORPORATED
ENGINEERING AND ENVIRONMENTAL CONSULTANTS
300 EAST HIGHLAND DRIVE
SUITE 500
AUSTIN, TEXAS
78753

NO.	DATE	REVISION	APPROV.
4			
3			
2			
1	1/5/7	RECORD DRAWING	K.A.H.

THE SEAL APPEARING ON THIS DOCUMENT WAS AUTHORIZED BY K. A. HARUTUNIAN, P.E. 59181 ON OCTOBER 18, 2003

WARNING
0 1/2 1
IF THIS BAR DOES NOT MEASURE 1" THEN DRAWING IS NOT TO SCALE

STATE OF TEXAS
K. A. HARUTUNIAN
59181
REGISTERED
PROFESSIONAL ENGINEER

Dwg. No. RE-21

CITY OF AUSTIN, TEXAS
NORTHEAST INTERIM WASTEWATER TREATMENT PLANT

EXHAUST FAN "OP-EF-002"
CONTROL SCHEMATIC (SHEET 1 OF 1)

Turner Collie & Braden Inc.
ENGINEERS • PLANNERS • PROJECT MANAGERS

Unit PUBLIC WORKS	Scale NONE	Date OCTOBER 2003	
Designed HEI	Checked HEI	Job No. 052-122094-0008	
Drawn HEI	Approved HEI	Sheet 235/327	

THIS CONFORMED DOCUMENT IS RELEASED FOR THE CONVENIENCE OF THE CONTRACTOR UNDER THE AUTHORITY OF:

K. A. Harutunian — 11-01-22

K. A. HARUTUNIAN, P.E. — DATE
TX LIC NO. 59181

SEE DISCLAIMER FOR LIMITATIONS OF USE.

CONTRACT DOCUMENTS DATED FEBRUARY 28, 2022, AS PART OF THE BIDDING DOCUMENTS (DRAWINGS AND SPECIFICATIONS) AND SUBSEQUENTLY ISSUED ADDENDA HAVE BEEN MERGED INTO ONE CONFORMING SET OF DOCUMENTS FOR THE CONVENIENCE OF THE CONTRACTOR. IF INCONSISTENCIES OR AMBIGUITIES BETWEEN "CONFORMED" DOCUMENTS AND CONTRACT DOCUMENTS ARE FOUND, THE CONTRACT DOCUMENTS SHALL GOVERN.

This document, and the designs incorporated herein, is an instrument of professional service that has been developed, designed and prepared by Harutunian Engineering, Inc., and is not to be used, in whole or in part, for any other project without giving written notice to Harutunian Engineering, Inc.

REV	DATE	BY	DESCRIPTION
			CONFORMED DOCUMENTS

DESIGNED HEI
DRAWN HEI
CHECKED HEI
DATE NOVEMBER 2022

** ORIGINAL SEALED BY K.A. HARUTUNIAN 02-28-22 TX PE 59181 **

HARUTUNIAN ENGINEERING INCORPORATED
ENGINEERING AND ENVIRONMENTAL CONSULTANTS
8100 CROSS PARK DRIVE
AUSTIN, TEXAS 78754
TBPE REGISTRATION NO. F-2408

carollo®
TBPELS No. F-882

CITY OF AUSTIN
FOUNDED 1839

CITY OF AUSTIN

CITY OF AUSTIN
WILD HORSE RANCH WWTP EXPANSION
DEMOLITION
EXHAUST FAN "OP-EF-002"
CONTROL WIRING SCHEMATICS - DEMOLITION

VERIFY SCALES
BAR IS ONE INCH ON ORIGINAL DRAWING
0 1"
IF NOT ONE INCH ON THIS SHEET, ADJUST SCALES ACCORDINGLY

JOB NO. 10976A.00
DRAWING NO. 80DN15
SHEET NO. 213 OF 464

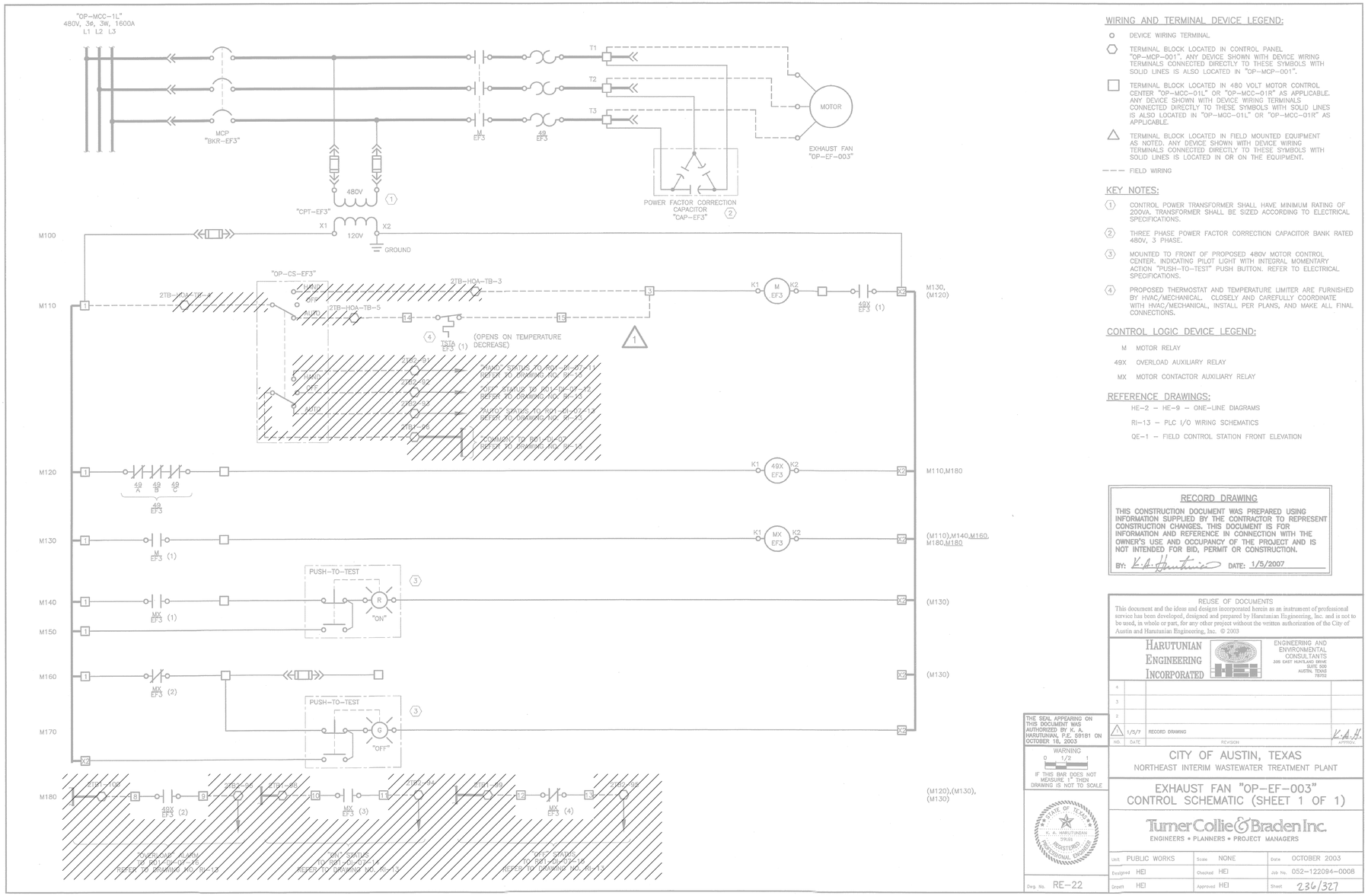

WIRING AND TERMINAL DEVICE LEGEND:

- ○ DEVICE WIRING TERMINAL
- ⬡ TERMINAL BLOCK LOCATED IN CONTROL PANEL "OP-MCP-001". ANY DEVICE SHOWN WITH DEVICE WIRING TERMINALS CONNECTED DIRECTLY TO THESE SYMBOLS WITH SOLID LINES IS ALSO LOCATED IN "OP-MCP-001".
- □ TERMINAL BLOCK LOCATED IN 480 VOLT MOTOR CONTROL CENTER "OP-MCC-01L" OR "OP-MCC-01R" AS APPLICABLE. ANY DEVICE SHOWN WITH DEVICE WIRING TERMINALS CONNECTED DIRECTLY TO THESE SYMBOLS WITH SOLID LINES IS ALSO LOCATED IN "OP-MCC-01L" OR "OP-MCC-01R" AS APPLICABLE.
- △ TERMINAL BLOCK LOCATED IN FIELD MOUNTED EQUIPMENT AS NOTED. ANY DEVICE SHOWN WITH DEVICE WIRING TERMINALS CONNECTED DIRECTLY TO THESE SYMBOLS WITH SOLID LINES IS LOCATED IN OR ON THE EQUIPMENT.
- – – – FIELD WIRING

KEY NOTES:

1. CONTROL POWER TRANSFORMER SHALL HAVE MINIMUM RATING OF 200VA. TRANSFORMER SHALL BE SIZED ACCORDING TO ELECTRICAL SPECIFICATIONS.
2. THREE PHASE POWER FACTOR CORRECTION CAPACITOR BANK RATED 480V, 3 PHASE.
3. MOUNTED TO FRONT OF PROPOSED 480V MOTOR CONTROL CENTER. INDICATING PILOT LIGHT WITH INTEGRAL MOMENTARY ACTION "PUSH-TO-TEST" PUSH BUTTON. REFER TO ELECTRICAL SPECIFICATIONS.
4. PROPOSED THERMOSTAT AND TEMPERATURE LIMITER ARE FURNISHED BY HVAC/MECHANICAL. CLOSELY AND CAREFULLY COORDINATE WITH HVAC/MECHANICAL, INSTALL PER PLANS, AND MAKE ALL FINAL CONNECTIONS.

CONTROL LOGIC DEVICE LEGEND:

M	MOTOR RELAY
49X	OVERLOAD AUXILIARY RELAY
MX	MOTOR CONTACTOR AUXILIARY RELAY

REFERENCE DRAWINGS:

HE-2 – HE-9 – ONE-LINE DIAGRAMS

RI-13 – PLC I/O WIRING SCHEMATICS

QE-1 – FIELD CONTROL STATION FRONT ELEVATION

RECORD DRAWING

THIS CONSTRUCTION DOCUMENT WAS PREPARED USING INFORMATION SUPPLIED BY THE CONTRACTOR TO REPRESENT CONSTRUCTION CHANGES. THIS DOCUMENT IS FOR INFORMATION AND REFERENCE IN CONNECTION WITH THE OWNER'S USE AND OCCUPANCY OF THE PROJECT AND IS NOT INTENDED FOR BID, PERMIT OR CONSTRUCTION.

BY: K.A. Harutunian DATE: 1/5/2007

REUSE OF DOCUMENTS
This document and the ideas and designs incorporated herein as an instrument of professional service has been developed, designed and prepared by Harutunian Engineering, Inc. and is not to be used, in whole or part, for any other project without the written authorization of the City of Austin and Harutunian Engineering, Inc. © 2003

HARUTUNIAN ENGINEERING INCORPORATED
ENGINEERING AND ENVIRONMENTAL CONSULTANTS
305 EAST HUNTLAND DRIVE
SUITE 300
AUSTIN, TEXAS
78752

NO.	DATE	REVISION	APPROV.
4			
3			
2			
1	1/5/7	RECORD DRAWING	K.A.H.

THE SEAL APPEARING ON THIS DOCUMENT WAS AUTHORIZED BY K. A. HARUTUNIAN, P.E. 59181 ON OCTOBER 16, 2003

WARNING
0 1/2 1
IF THIS BAR DOES NOT MEASURE 1" THEN DRAWING IS NOT TO SCALE

STATE OF TEXAS · K. A. HARUTUNIAN · 59181 · REGISTERED · PROFESSIONAL ENGINEER

Dsp. No. RE-22

CITY OF AUSTIN, TEXAS
NORTHEAST INTERIM WASTEWATER TREATMENT PLANT

EXHAUST FAN "OP-EF-003"
CONTROL SCHEMATIC (SHEET 1 OF 1)

Turner Collie & Braden Inc.
ENGINEERS + PLANNERS + PROJECT MANAGERS

Unit PUBLIC WORKS	Scale NONE	Date OCTOBER 2003	
Designed HEI	Checked HEI	Job No. 052-122094-0008	
Drawn HEI	Approved HEI	Sheet 236/327	

GENERAL NOTES:

1. DISCONNECT AND REMOVE THE EXISTING MAIN CONTROL PANEL INSTRUMENTATION AND CONTROL EQUIPMENT (I.E. SIGNAL ISOLATORS,TERMINAL BLOCKS, INTERCONNECT WIRING, CONTROL DEVICES, ETC.) IN THEIR ENTIRETY. REFER TO WIRING SCHEMATICS FOR ADDITIONAL REQUIREMENTS AND INFORMATION.
2. DISCONNECT AND REMOVE EXISTING FIELD WIRING AND ASSOCIATED FIELD EQUIPMENT IN THEIR ENTIRETY. REFER TO PLAN DRAWINGS FOR ADDITIONAL INFORMATION.

THIS CONFORMED DOCUMENT IS RELEASED FOR THE CONVENIENCE OF THE CONTRACTOR UNDER THE AUTHORITY OF:

K. A. HARUTUNIAN, P.E. 11-01-22
TX LIC NO. 59181 DATE

SEE DISCLAIMER FOR LIMITATIONS OF USE.

CONTRACT DOCUMENTS DATED FEBRUARY 28, 2022, AS PART OF THE BIDDING DOCUMENTS (DRAWINGS AND SPECIFICATIONS) AND SUBSEQUENTLY ISSUED ADDENDA HAVE BEEN MERGED INTO ONE CONFORMING SET OF DOCUMENTS FOR THE CONVENIENCE OF THE CONTRACTOR. IF INCONSISTENCIES OR AMBIGUITIES BETWEEN "CONFORMED" DOCUMENTS AND CONTRACT DOCUMENTS ARE FOUND, THE CONTRACT DOCUMENTS SHALL GOVERN.

This document, and the designs incorporated herein, is an instrument of professional service that has been developed, designed and prepared by Harutunian Engineering, Inc., and is not to be used, in whole or in part, for any other project without giving written notice to Harutunian Engineering, Inc.

REV	DATE	BY	DESCRIPTION
			CONFORMED DOCUMENTS

DESIGNED HEI
DRAWN HEI
CHECKED HEI
DATE NOVEMBER 2022

** ORIGINAL SEALED BY K.A. HARUTUNIAN 02-28-22 TX PE 59181 **

HARUTUNIAN ENGINEERING INCORPORATED
ENGINEERING AND ENVIRONMENTAL CONSULTANTS
8100 CROSS PARK DRIVE
AUSTIN, TEXAS 78754
TBPE REGISTRATION NO. F-2408

carollo
TBPELS No. F-882

CITY OF AUSTIN FOUNDED 1839

CITY OF AUSTIN

CITY OF AUSTIN
WILD HORSE RANCH WWTP EXPANSION
DEMOLITION
EXHAUST FAN "OP-EF-003"
CONTROL WIRING SCHEMATICS - DEMOLITION

VERIFY SCALES
BAR IS ONE INCH ON ORIGINAL DRAWING
0 1"
IF NOT ONE INCH ON THIS SHEET, ADJUST SCALES ACCORDINGLY

JOB NO. 10976A.00
DRAWING NO. 80DN16
SHEET NO. 214 OF 464

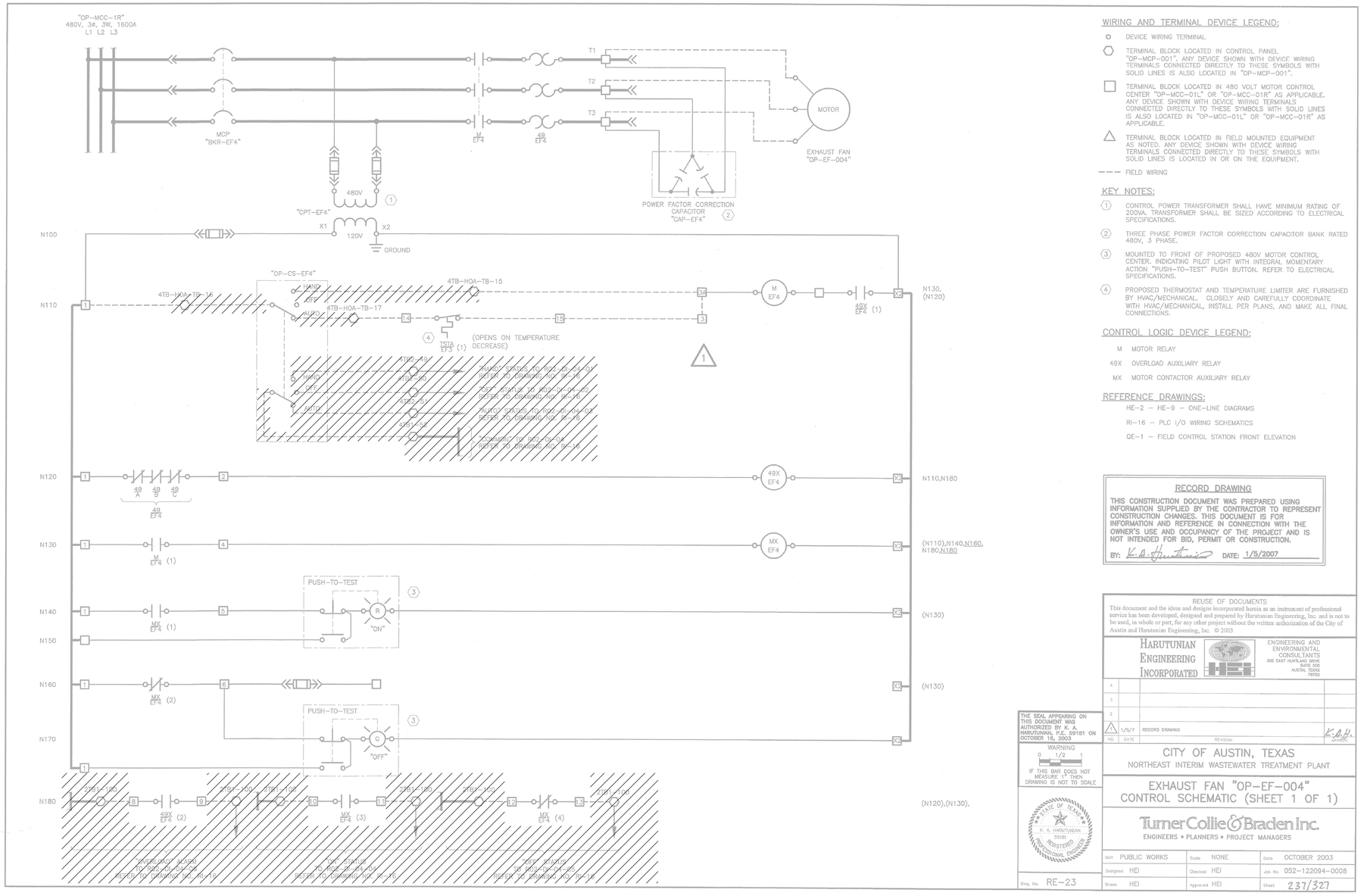

WIRING AND TERMINAL DEVICE LEGEND:

- ○ DEVICE WIRING TERMINAL
- ⬡ TERMINAL BLOCK LOCATED IN CONTROL PANEL "OP-MCP-001". ANY DEVICE SHOWN WITH DEVICE WIRING TERMINALS CONNECTED DIRECTLY TO THESE SYMBOLS WITH SOLID LINES IS ALSO LOCATED IN "OP-MCP-001".
- □ TERMINAL BLOCK LOCATED IN 480 VOLT MOTOR CONTROL CENTER "OP-MCC-01L" OR "OP-MCC-01R" AS APPLICABLE. ANY DEVICE SHOWN WITH DEVICE WIRING TERMINALS CONNECTED DIRECTLY TO THESE SYMBOLS WITH SOLID LINES IS ALSO LOCATED IN "OP-MCC-01L" OR "OP-MCC-01R" AS APPLICABLE.
- △ TERMINAL BLOCK LOCATED IN FIELD MOUNTED EQUIPMENT AS NOTED. ANY DEVICE SHOWN WITH DEVICE WIRING TERMINALS CONNECTED DIRECTLY TO THESE SYMBOLS WITH SOLID LINES IS LOCATED IN OR ON THE EQUIPMENT.
- – – – FIELD WIRING

KEY NOTES:

1. CONTROL POWER TRANSFORMER SHALL HAVE MINIMUM RATING OF 200VA. TRANSFORMER SHALL BE SIZED ACCORDING TO ELECTRICAL SPECIFICATIONS.
2. THREE PHASE POWER FACTOR CORRECTION CAPACITOR BANK RATED 480V, 3 PHASE.
3. MOUNTED TO FRONT OF PROPOSED 480V MOTOR CONTROL CENTER. INDICATING PILOT LIGHT WITH INTEGRAL MOMENTARY ACTION "PUSH-TO-TEST" PUSH BUTTON. REFER TO ELECTRICAL SPECIFICATIONS.
4. PROPOSED THERMOSTAT AND TEMPERATURE LIMITER ARE FURNISHED BY HVAC/MECHANICAL. CLOSELY AND CAREFULLY COORDINATE WITH HVAC/MECHANICAL, INSTALL PER PLANS, AND MAKE ALL FINAL CONNECTIONS.

CONTROL LOGIC DEVICE LEGEND:

- M MOTOR RELAY
- 49X OVERLOAD AUXILIARY RELAY
- MX MOTOR CONTACTOR AUXILIARY RELAY

REFERENCE DRAWINGS:

HE-2 – HE-9 – ONE-LINE DIAGRAMS

RI-16 – PLC I/O WIRING SCHEMATICS

QE-1 – FIELD CONTROL STATION FRONT ELEVATION

GENERAL NOTES:

1. DISCONNECT AND REMOVE THE EXISTING MAIN CONTROL PANEL INSTRUMENTATION AND CONTROL EQUIPMENT (I.E. SIGNAL ISOLATORS,TERMINAL BLOCKS, INTERCONNECT WIRING, CONTROL DEVICES, ETC.) IN THEIR ENTIRETY. REFER TO WIRING SCHEMATICS FOR ADDITIONAL REQUIREMENTS AND INFORMATION. D'd2.
2. DISCONNECT AND REMOVE EXISTING FIELD WIRING AND ASSOCIATED FIELD EQUIPMENT IN THEIR ENTIRETY. REFER TO PLAN DRAWINGS FOR ADDITIONAL INFORMATION.

RECORD DRAWING

THIS CONSTRUCTION DOCUMENT WAS PREPARED USING INFORMATION SUPPLIED BY THE CONTRACTOR TO REPRESENT CONSTRUCTION CHANGES. THIS DOCUMENT IS FOR INFORMATION AND REFERENCE IN CONNECTION WITH THE OWNER'S USE AND OCCUPANCY OF THE PROJECT AND IS NOT INTENDED FOR BID, PERMIT OR CONSTRUCTION.

BY: K.A. Hartunian DATE: 1/5/2007

REUSE OF DOCUMENTS
This document and the ideas and designs incorporated herein as an instrument of professional service has been developed, designed and prepared by Harutunian Engineering, Inc. and is not to be used, in whole or part, for any other project without the written authorization of the City of Austin and Harutunian Engineering, Inc. © 2003

HARUTUNIAN ENGINEERING INCORPORATED
ENGINEERING AND ENVIRONMENTAL CONSULTANTS
305 EAST HIGHLAND DRIVE
SUITE 500
AUSTIN, TEXAS
78723

NO.	DATE	REVISION
4		
3		
2		
1	1/5/7	RECORD DRAWING

THE SEAL APPEARING ON THIS DOCUMENT WAS AUTHORIZED BY K. A. HARUTUNIAN, P.E. 59181 ON OCTOBER 18, 2003

WARNING
0 1/2 1
IF THIS BAR DOES NOT MEASURE 1" THEN DRAWING IS NOT TO SCALE

STATE OF TEXAS · K. A. HARUTUNIAN · 59181 · REGISTERED · PROFESSIONAL ENGINEER

Dwg. No. RE-23

CITY OF AUSTIN, TEXAS
NORTHEAST INTERIM WASTEWATER TREATMENT PLANT

EXHAUST FAN "OP-EF-004"
CONTROL SCHEMATIC (SHEET 1 OF 1)

Turner Collie & Braden Inc.
ENGINEERS • PLANNERS • PROJECT MANAGERS

Unit PUBLIC WORKS	Scale NONE	Date OCTOBER 2003	
Designed HEI	Checked HEI	Job No. 052-12209A-0008	
Drawn HEI	Approved HEI	Sheet 237/327	

THIS CONFORMED DOCUMENT IS RELEASED FOR THE CONVENIENCE OF THE CONTRACTOR UNDER THE AUTHORITY OF:

K. A. HARUTUNIAN, P.E.
TX LIC NO. 59181

11-01-22
DATE

SEE DISCLAIMER FOR LIMITATIONS OF USE.

CONTRACT DOCUMENTS DATED FEBRUARY 28, 2022, AS PART OF THE BIDDING DOCUMENTS (DRAWINGS AND SPECIFICATIONS) AND SUBSEQUENTLY ISSUED ADDENDA HAVE BEEN MERGED INTO ONE CONFORMING SET OF DOCUMENTS FOR THE CONVENIENCE OF THE CONTRACTOR. IF INCONSISTENCIES OR AMBIGUITIES BETWEEN "CONFORMED" DOCUMENTS AND CONTRACT DOCUMENTS ARE FOUND, THE CONTRACT DOCUMENTS SHALL GOVERN.

This document, and the designs incorporated herein, is an instrument of professional service that has been developed, designed and prepared by Harutunian Engineering, Inc., and is not to be used, in whole or in part, for any other project without giving written notice to Harutunian Engineering, Inc.

REV	DATE	BY	DESCRIPTION
			CONFORMED DOCUMENTS

DESIGNED HEI
DRAWN HEI
CHECKED HEI
DATE NOVEMBER 2022

** ORIGINAL SEALED BY K.A. HARUTUNIAN 02-28-22 TX PE 59181 **

HARUTUNIAN ENGINEERING INCORPORATED
ENGINEERING AND ENVIRONMENTAL CONSULTANTS
8100 CROSS PARK DRIVE
AUSTIN, TEXAS 78754
TBPE REGISTRATION NO. F-2408

carollo
TBPELS No. F-882

CITY OF AUSTIN

CITY OF AUSTIN
WILD HORSE RANCH WWTP EXPANSION
DEMOLITION
EXHAUST FAN "OP-EF-004"
CONTROL WIRING SCHEMATICS - DEMOLITION

VERIFY SCALES
BAR IS ONE INCH ON ORIGINAL DRAWING
0 1"
IF NOT ONE INCH ON THIS SHEET, ADJUST SCALES ACCORDINGLY

JOB NO. 10976A.00
DRAWING NO. 80DN17
SHEET NO. 215 OF 464

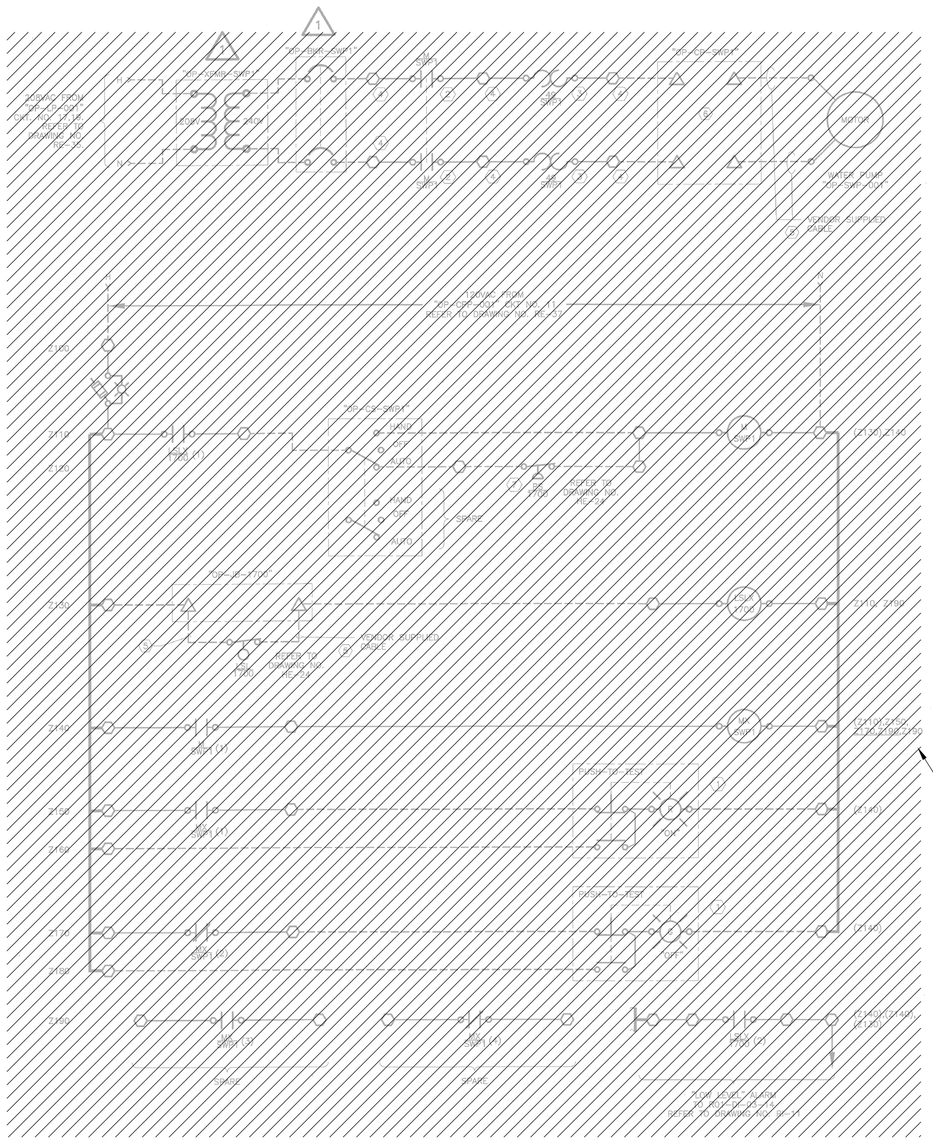
1
2EP-ESWP-SWP1
2EP-CSWP-SWP1
2EP-CS-SWP1
2EP-MCP-001
2EP-SWP-001
M
SWP1
MOTOR
WATER PUMP
2EP-SWP-001
VENDOR SUPPLIED CABLE
120VAC FROM 2EP-LP-001 CKT NO. 11 REFER TO DRAWING NO. RE-37
2EP-CS-SWP1
HAND
OFF
AUTO
2EP-MCP-001
SPARE
REFER TO DRAWING NO. RE-24
VENDOR SUPPLIED CABLE
PUSH-TO-TEST
SPARE
TO/FROM LEVEL ALARM RELAY ON 2EP-LP-001 REFER TO DRAWING NO. RE-11
Z100
Z110
Z120
Z130
Z140
Z150
Z160
Z170
Z180
Z190
Z200
Z210
Z220
Z230
Z240
Z250
Z260
Z270
Z280
Z290
Z300
Z310
Z320
Z330
Z340
Z350
Z360
Z370
Z380
Z390
Z400
Z410
Z420
Z430
Z440
Z450
Z460
Z470
Z480
Z490

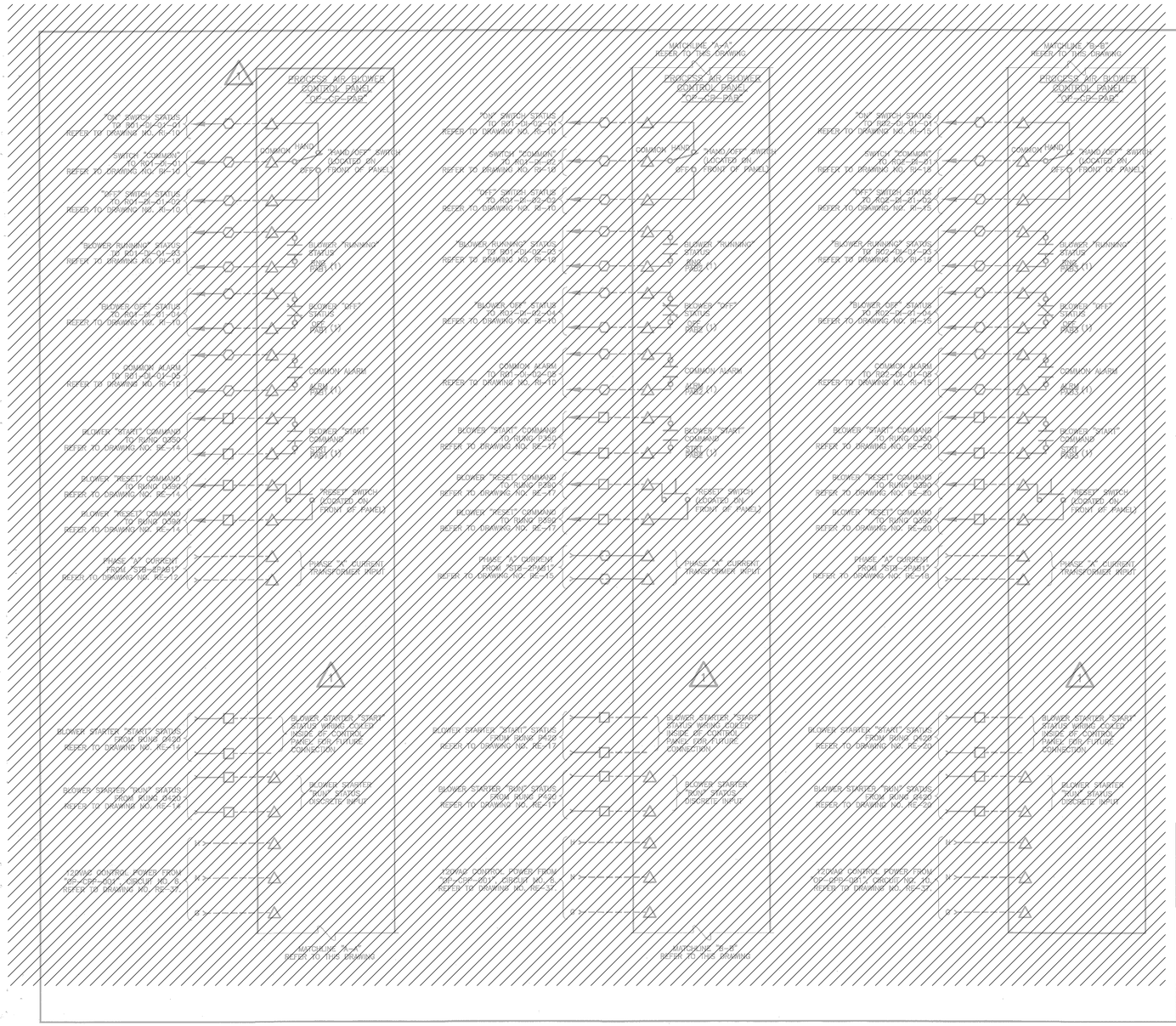

WIRING AND TERMINAL DEVICE LEGEND:

- ○ DEVICE WIRING TERMINAL
- ⬡ TERMINAL BLOCK LOCATED IN CONTROL PANEL "OP-MCP-001". ANY DEVICE SHOWN WITH DEVICE WIRING TERMINALS CONNECTED DIRECTLY TO THESE SYMBOLS WITH SOLID LINES IS ALSO LOCATED IN "OP-MCP-001".
- □ TERMINAL BLOCK LOCATED IN 480 VOLT MOTOR CONTROL CENTER "OP-MCC-01L" OR "OP-MCC-01R" AS APPLICABLE. ANY DEVICE SHOWN WITH DEVICE WIRING TERMINALS CONNECTED DIRECTLY TO THESE SYMBOLS WITH SOLID LINES IS ALSO LOCATED IN "OP-MCC-01L" OR "OP-MCC-01R" AS APPLICABLE.
- △ TERMINAL BLOCK LOCATED IN FIELD MOUNTED EQUIPMENT AS NOTED. ANY DEVICE SHOWN WITH DEVICE WIRING TERMINALS CONNECTED DIRECTLY TO THESE SYMBOLS WITH SOLID LINES IS LOCATED IN OR ON THE EQUIPMENT.
- — — FIELD WIRING

GENERAL NOTES:

1. ALL FIELD DEVICES ARE NOT SHOWN ON THIS DRAWING. THE ACTUAL FIELD DEVICE QUANTITY/LOCATION MAY VARY. IT IS THE RESPONSIBILITY OF THE CONTRACTOR TO FURNISH AND INSTALL ALL NECESSARY FIELD DEVICE(S), FIELD DEVICE(S) INTERCONNECT CONDUIT/WIRE AND MAKE ALL FINAL CONNECTIONS PER THE SPECIFICATIONS, THE MANUFACTURER'S RECOMMENDATIONS, AND THE MANUFACTURER'S WIRING DIAGRAMS. THE CONTRACTOR SHALL SIZE PROPOSED CONDUIT/WIRE PER THE SPECIFICATIONS, CLOSELY AND CAREFULLY COORDINATE FIELD DEVICE WIRING REQUIREMENTS WITH THE MANUFACTURER'S WIRING DIAGRAMS AND THE SPECIFICATIONS. CLOSELY AND CAREFULLY COORDINATE CONDUIT/WIRE CONNECTION WITH THE MANUFACTURER AND MAKE ALL FINAL CONNECTIONS. FIELD ROUTE PROPOSED CONDUIT/WIRE PER THE SPECIFICATIONS TO THE SATISFACTION OF THE ENGINEER AND THE OWNER AT NO ADDITIONAL COST TO THE OWNER. CLOSELY AND CAREFULLY COORDINATE ROUTE OF PROPOSED CONDUIT/WIRE, VERIFYING ALL POINTS OF CONNECTION PRIOR TO COMMENCING INSTALLATION. ALSO REFER TO THE APPLICABLE FLOOR PLAN DRAWINGS FOR ADDITIONAL INFORMATION.

REFERENCE DRAWINGS:

HE-2 – HE-9 RENOVATION ONE-LINE DIAGRAMS

RE-12 – RE-14 CONTROL SCHEMATICS

RE-26 – CONTROL SCHEMATICS

RE-15 – RE-17 CONTROL SCHEMATICS

RE-18 – RE-20 CONTROL SCHEMATICS

RI-10 PLC I/O WIRING SCHEMATICS

RI-15 PLC I/O WIRING SCHEMATICS

RI-20 PLC I/O WIRING SCHEMATICS

RECORD DRAWING

THIS CONSTRUCTION DOCUMENT WAS PREPARED USING INFORMATION SUPPLIED BY THE CONTRACTOR TO REPRESENT CONSTRUCTION CHANGES. THIS DOCUMENT IS FOR INFORMATION AND REFERENCE IN CONNECTION WITH THE OWNER'S USE AND OCCUPANCY OF THE PROJECT AND IS NOT INTENDED FOR BID, PERMIT OR CONSTRUCTION.

BY: K.A. Harutunian DATE: 1/5/2007

REUSE OF DOCUMENTS
This document and the ideas and designs incorporated herein as an instrument of professional service has been developed, designed and prepared by Harutunian Engineering, Inc. and is not to be used, in whole or part, for any other project without the written authorization of the City of Austin and Harutunian Engineering, Inc. © 2003

HARUTUNIAN ENGINEERING INCORPORATED
ENGINEERING AND ENVIRONMENTAL CONSULTANTS
305 EAST HANDLING DRIVE
SUITE 600
AUSTIN, TEXAS
78752

NO.	DATE	REVISION	APPROV.
4			
3			
2			
1	1/5/7	RECORD DRAWING	K.M.H.

THE SEAL APPEARING ON THIS DOCUMENT WAS AUTHORIZED BY K. A. HARUTUNIAN, P.E. 59181 ON OCTOBER 18, 2003

WARNING
0 1/2 1
IF THIS BAR DOES NOT MEASURE 1" THEN DRAWING IS NOT TO SCALE

STATE OF TEXAS · K.A. HARUTUNIAN · 59181 · REGISTERED PROFESSIONAL ENGINEER

Dwg. No. RE-26

CITY OF AUSTIN, TEXAS
NORTHEAST INTERIM WASTEWATER TREATMENT PLANT

AERATION BLOWERS CONTROL PANEL
FIELD WIRING SCHEMATIC (SHEET 1 OF 1)

Turner Collie & Braden Inc.
ENGINEERS • PLANNERS • PROJECT MANAGERS

Unit PUBLIC WORKS	Scale NONE	Date OCTOBER 2003	
Designed HEI	Checked HEI	Job No. 052-122094-0008	
Drawn HEI	Approved HEI	Sheet 240/327	

GENERAL NOTES:

1. DISCONNECT AND REMOVE EXISTING PROCESS AIR BLOWER CONTROL PANELS AND ASSOCIATED SUB-COMPONENTS (I.E. MOTORS, CONTROL DEVICES, INSTRUMENTATION, ETC.) IN THEIR ENTIRETY. PLEASE BE AWARE THAT NOT ALL SUB-COMPONENTS OF THE SYSTEM HAVE BEEN SHOWN ON THIS DRAWING. COORDINATE WITH PROCESS MECHANICAL PRIOR TO COMMENCING DEMOLITION ACTIVITIES.
2. DISCONNECT AND REMOVE EXISTING ASSOCIATED FIELD WIRING IN ITS ENTIRETY. REFER TO PLAN DRAWINGS FOR ADDITIONAL INFORMATION.

THIS CONFORMED DOCUMENT IS RELEASED FOR THE CONVENIENCE OF THE CONTRACTOR UNDER THE AUTHORITY OF:

K. A. HARUTUNIAN, P.E.
TX LIC NO. 59181

11-01-22
DATE

SEE DISCLAIMER FOR LIMITATIONS OF USE.

CONTRACT DOCUMENTS DATED FEBRUARY 28, 2022, AS PART OF THE BIDDING DOCUMENTS (DRAWINGS AND SPECIFICATIONS) AND SUBSEQUENTLY ISSUED ADDENDA HAVE BEEN MERGED INTO ONE CONFORMING SET OF DOCUMENTS FOR THE CONVENIENCE OF THE CONTRACTOR. IF INCONSISTENCIES OR AMBIGUITIES BETWEEN "CONFORMED" DOCUMENTS AND CONTRACT DOCUMENTS ARE FOUND, THE CONTRACT DOCUMENTS SHALL GOVERN.

This document, and the designs incorporated herein, is an instrument of professional service that has been developed, designed and prepared by Harutunian Engineering, Inc., and is not to be used, in whole or in part, for any other project without giving written notice to Harutunian Engineering, Inc.

REV	DATE	BY	DESCRIPTION

CONFORMED DOCUMENTS

DESIGNED HEI
DRAWN HEI
CHECKED HEI
DATE NOVEMBER 2022

** ORIGINAL SEALED BY K.A. HARUTUNIAN 02-28-22 TX PE 59181 **

HARUTUNIAN ENGINEERING INCORPORATED
ENGINEERING AND ENVIRONMENTAL CONSULTANTS
8100 CROSS PARK DRIVE
AUSTIN, TEXAS 78754
TBPE REGISTRATION NO. F-2408

carollo
TBPELS No. F-882

CITY OF AUSTIN
FOUNDED 1839

CITY OF AUSTIN

CITY OF AUSTIN
WILD HORSE RANCH WWTP EXPANSION
DEMOLITION
RAIN WATER COLLECTION SYSTEM CONTROL PANEL FIELD INTERFACE WIRING SCHEMATIC - DEMOLITION

VERIFY SCALES
BAR IS ONE INCH ON ORIGINAL DRAWING
0 1"
IF NOT ONE INCH ON THIS SHEET, ADJUST SCALES ACCORDINGLY

JOB NO. 10976A.00
DRAWING NO. 80DN19
SHEET NO. 217 OF 464

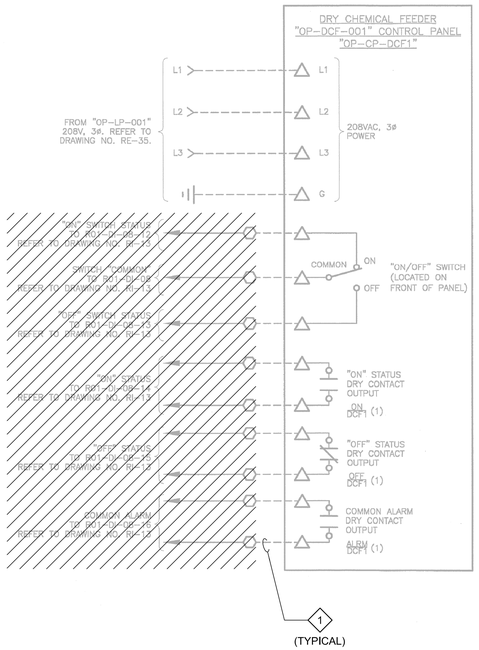

WIRING AND TERMINAL DEVICE LEGEND:

- DEVICE WIRING TERMINAL
- TERMINAL BLOCK LOCATED IN CONTROL PANEL "OP-MCP-001". ANY DEVICE SHOWN WITH DEVICE WIRING TERMINALS CONNECTED DIRECTLY TO THESE SYMBOLS WITH SOLID LINES IS ALSO LOCATED IN "OP-MCP-001".
- TERMINAL BLOCK LOCATED IN 480 VOLT MOTOR CONTROL CENTER "OP-MCC-01L" OR "OP-MCC-01R" AS APPLICABLE. ANY DEVICE SHOWN WITH DEVICE WIRING TERMINALS CONNECTED DIRECTLY TO THESE SYMBOLS WITH SOLID LINES IS ALSO LOCATED IN "OP-MCC-01L" OR "OP-MCC-01R" AS APPLICABLE.
- TERMINAL BLOCK LOCATED IN FIELD MOUNTED EQUIPMENT AS NOTED. ANY DEVICE SHOWN WITH DEVICE WIRING TERMINALS CONNECTED DIRECTLY TO THESE SYMBOLS WITH SOLID LINES IS LOCATED IN OR ON THE EQUIPMENT.
- FIELD WIRING

GENERAL NOTES:

1. ALL FIELD DEVICES ARE NOT SHOWN ON THIS DRAWING. THE ACTUAL FIELD DEVICE QUANTITY/LOCATION MAY VARY. IT IS THE RESPONSIBILITY OF THE CONTRACTOR TO FURNISH AND INSTALL ALL NECESSARY FIELD DEVICE(S), FIELD DEVICE(S) INTERCONNECT CONDUIT/WIRE AND MAKE ALL FINAL CONNECTIONS PER THE SPECIFICATIONS, THE MANUFACTURER'S RECOMMENDATIONS, AND THE MANUFACTURER'S WIRING DIAGRAMS. THE CONTRACTOR SHALL SIZE PROPOSED CONDUIT/WIRE PER THE SPECIFICATIONS. CLOSELY AND CAREFULLY COORDINATE FIELD DEVICE WIRING REQUIREMENTS WITH THE MANUFACTURER'S WIRING DIAGRAMS AND THE SPECIFICATIONS. CLOSELY AND CAREFULLY COORDINATE CONDUIT/WIRE CONNECTION WITH THE MANUFACTURER AND MAKE ALL FINAL CONNECTIONS. FIELD ROUTE PROPOSED CONDUIT/WIRE PER THE SPECIFICATIONS TO THE SATISFACTION OF THE ENGINEER AND THE OWNER AT NO ADDITIONAL COST TO THE OWNER. CLOSELY AND CAREFULLY COORDINATE ROUTE OF PROPOSED CONDUIT/WIRE, VERIFYING ALL POINTS OF CONNECTION PRIOR TO COMMENCING INSTALLATION. ALSO REFER TO THE APPLICABLE FLOOR PLAN DRAWINGS FOR ADDITIONAL INFORMATION.

REFERENCE DRAWINGS:

RE-35 – RE-37 – PANEL SCHEDULES

RI-13 – PLC I/O WIRING SCHEMATICS

KEY NOTES

1. CHEMICAL FEED PUMP, SPEED TRANSMITTER AND INTERCONNECT WIRING SHALL REMAIN AND BE REUSED DURING RENOVATION ACTIVITIES. CONTRACTOR SHALL FIELD VERIFY EXISTING CONDITIONS AND TAKE DETAILED NOTES OF THE EXISTING CHEMICAL FEED PUMP WIRING TERMINATIONS PRIOR TO DISCONNECTING THE FEED PUMP IN ORDER TO RETURN THE PUMP TO SERVICE DURING RENOVATION ACTIVITIES.

RECORD DRAWING

THIS CONSTRUCTION DOCUMENT WAS PREPARED USING INFORMATION SUPPLIED BY THE CONTRACTOR TO REPRESENT CONSTRUCTION CHANGES. THIS DOCUMENT IS FOR INFORMATION AND REFERENCE IN CONNECTION WITH THE OWNER'S USE AND OCCUPANCY OF THE PROJECT AND IS NOT INTENDED FOR BID, PERMIT OR CONSTRUCTION.

BY: K. A. Harutunian DATE: 1/5/2007

REUSE OF DOCUMENTS
This document and the ideas and designs incorporated herein as an instrument of professional service has been developed, designed and prepared by Harutunian Engineering, Inc. and is not to be used, in whole or part, for any other project without the written authorization of the City of Austin and Harutunian Engineering, Inc. © 2003

HARUTUNIAN ENGINEERING INCORPORATED
ENGINEERING AND ENVIRONMENTAL CONSULTANTS
305 EAST HUNTLAND DRIVE
SUITE 300
AUSTIN, TEXAS
78752

NO.	DATE	REVISION	APPROV.
4			
3			
2			
1			

WARNING
0 1/2 1
IF THIS BAR DOES NOT MEASURE 1" THEN DRAWING IS NOT TO SCALE

STATE OF TEXAS
K. A. HARUTUNIAN
59181
REGISTERED
PROFESSIONAL ENGINEER
10/18/2003

Dwg. No. RE-32

CITY OF AUSTIN, TEXAS
NORTHEAST INTERIM WASTEWATER TREATMENT PLANT

DRY CHEMICAL FEEDER "OP-DCF-001" FIELD WIRING SCHEMATIC (SHEET 1 OF 1)

Turner Collie & Braden Inc.
ENGINEERS • PLANNERS • PROJECT MANAGERS

Unit PUBLIC WORKS	Scale NONE	Date OCTOBER 2003	
Designed HEI	Checked HEI	Job No. 052-122094-0008	
Drawn HEI	Approved HEI	Sheet 216/827	

THIS CONFORMED DOCUMENT IS RELEASED FOR THE CONVENIENCE OF THE CONTRACTOR UNDER THE AUTHORITY OF:

K. A. Harutunian — 11-01-22

K. A. HARUTUNIAN, P.E. — DATE
TX LIC NO. 59181

SEE DISCLAIMER FOR LIMITATIONS OF USE.

CONTRACT DOCUMENTS DATED FEBRUARY 28, 2022, AS PART OF THE BIDDING DOCUMENTS (DRAWINGS AND SPECIFICATIONS) AND SUBSEQUENTLY ISSUED ADDENDA HAVE BEEN MERGED INTO ONE CONFORMING SET OF DOCUMENTS FOR THE CONVENIENCE OF THE CONTRACTOR. IF INCONSISTENCIES OR AMBIGUITIES BETWEEN "CONFORMED" DOCUMENTS AND CONTRACT DOCUMENTS ARE FOUND, THE CONTRACT DOCUMENTS SHALL GOVERN.

This document, and the designs incorporated herein, is an instrument of professional service that has been developed, designed and prepared by Harutunian Engineering, Inc., and is not to be used, in whole or in part, for any other project without giving written notice to Harutunian Engineering, Inc.

REV	DATE	BY	DESCRIPTION
			CONFORMED DOCUMENTS

DESIGNED HEI
DRAWN HEI
CHECKED HEI
DATE NOVEMBER 2022

** ORIGINAL SEALED BY K.A. HARUTUNIAN 02-28-22 TX PE 59181 **

HARUTUNIAN ENGINEERING INCORPORATED
ENGINEERING AND ENVIRONMENTAL CONSULTANTS
8100 CROSS PARK DRIVE
AUSTIN, TEXAS 78754
TBPE REGISTRATION NO. F-2408

carollo
TBPELS No. F-882

CITY OF AUSTIN
FOUNDED 1839

CITY OF AUSTIN

CITY OF AUSTIN
WILD HORSE RANCH WWTP EXPANSION
DEMOLITION
DRY CHEMICAL FEEDER
FIELD INTERFACE WIRING SCHEMATIC - DEMOLITION

VERIFY SCALES
BAR IS ONE INCH ON ORIGINAL DRAWING
0 1"
IF NOT ONE INCH ON THIS SHEET, ADJUST SCALES ACCORDINGLY

JOB NO. 10976A.00
DRAWING NO. 80DN20
SHEET NO. 218 OF 464

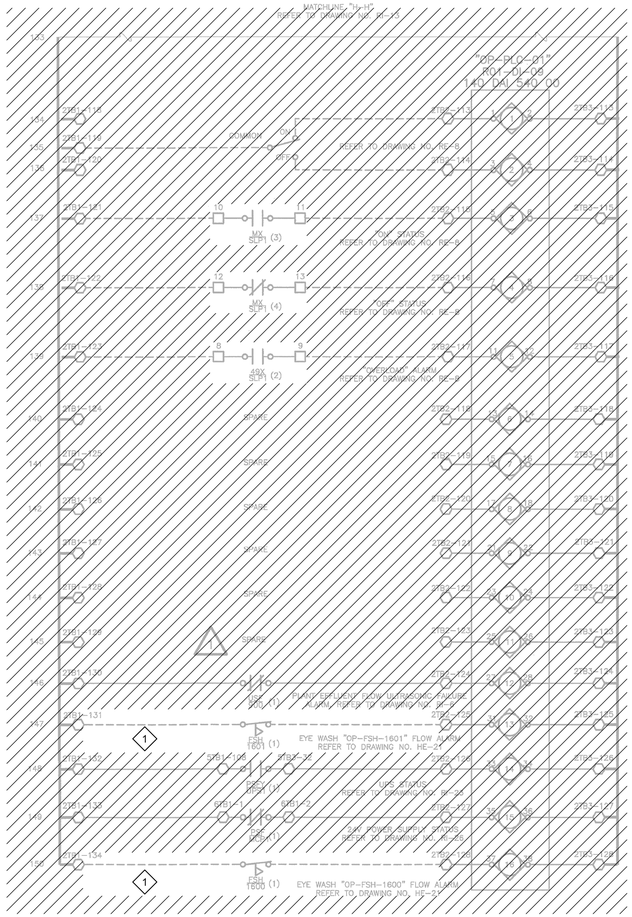

KEY NOTES

1. INTERCONNECT WIRING SHALL REMAIN AND BE REUSED DURING RENOVATION ACTIVITIES. CONTRACTOR SHALL FIELD VERIFY EXISTING CONDITIONS AND TAKE DETAILED NOTES OF THE EXISTING WIRING TERMINATIONS PRIOR TO DISCONNECTING IN ORDER TO RETURN THE EQUIPMENT TO SERVICE DURING RENOVATION ACTIVITIES.

WIRING AND TERMINAL DEVICE LEGEND:

- DEVICE WIRING TERMINAL
- TERMINAL BLOCK LOCATED IN CONTROL PANEL "OP-MCP-001". ANY DEVICE SHOWN WITH DEVICE WIRING TERMINALS CONNECTED DIRECTLY TO THESE SYMBOLS WITH SOLID LINES IS ALSO LOCATED IN "OP-MCP-001".
- TERMINAL BLOCK LOCATED IN 480 VOLT MOTOR CONTROL CENTER "OP-MCC-01L" OR "OP-MCC-01R" AS APPLICABLE. ANY DEVICE SHOWN WITH DEVICE WIRING TERMINALS CONNECTED DIRECTLY TO THESE SYMBOLS WITH SOLID LINES IS ALSO LOCATED IN "OP-MCC-01L" OR "OP-MCC-01R" AS APPLICABLE.
- TERMINAL BLOCK LOCATED IN FIELD MOUNTED EQUIPMENT AS NOTED. ANY DEVICE SHOWN WITH DEVICE WIRING TERMINALS CONNECTED DIRECTLY TO THESE SYMBOLS WITH SOLID LINES IS LOCATED IN OR ON THE EQUIPMENT.
- FIELD WIRING

REFERENCE DRAWINGS:

RE-8 – CONTROL LOGIC WIRING SCHEMATICS

RECORD DRAWING

THIS CONSTRUCTION DOCUMENT WAS PREPARED USING INFORMATION SUPPLIED BY THE CONTRACTOR TO REPRESENT CONSTRUCTION CHANGES. THIS DOCUMENT IS FOR INFORMATION AND REFERENCE IN CONNECTION WITH THE OWNER'S USE AND OCCUPANCY OF THE PROJECT AND IS NOT INTENDED FOR BID, PERMIT OR CONSTRUCTION.

BY: K.A. Harutunian DATE: 1/5/2007

REUSE OF DOCUMENTS
This document and the ideas and designs incorporated herein as an instrument of professional service has been developed, designed and prepared by Harutunian Engineering, Inc. and is not to be used, in whole or part, for any other project without the written authorization of the City of Austin and Harutunian Engineering, Inc. © 2003

HARUTUNIAN ENGINEERING INCORPORATED
ENGINEERING AND ENVIRONMENTAL CONSULTANTS
305 EAST HUNTLAND DRIVE
SUITE 300
AUSTIN, TEXAS
78752

NO.	DATE	REVISION
4		
3		
2		
1	1/5/7	RECORD DRAWING

THE SEAL APPEARING ON THIS DOCUMENT WAS AUTHORIZED BY K. A. HARUTUNIAN, P.E. 59181 ON OCTOBER 18, 2003

WARNING
0 1/2 1
IF THIS BAR DOES NOT MEASURE 1" THEN DRAWING IS NOT TO SCALE

STATE OF TEXAS · K. A. HARUTUNIAN · 59181 · REGISTERED · PROFESSIONAL ENGINEER

Dwg. No. RI-14

CITY OF AUSTIN, TEXAS
NORTHEAST INTERIM WASTEWATER TREATMENT PLANT

OPERATIONS BUILDING PLC I/O
WIRING SCHEMATICS (SHEET 5 OF 13)

Turner Collie & Braden Inc.
ENGINEERS • PLANNERS • PROJECT MANAGERS

Unit PUBLIC WORKS	Scale NONE	Date OCTOBER 2003	
Designed HEI	Checked HEI	Job No. 052-122094-0008	
Drawn HEI	Approved HEI	Sheet 266/327	

THIS CONFORMED DOCUMENT IS RELEASED FOR THE CONVENIENCE OF THE CONTRACTOR UNDER THE AUTHORITY OF:

K. A. HARUTUNIAN, P.E.
TX LIC NO. 59181

11-01-22
DATE

SEE DISCLAIMER FOR LIMITATIONS OF USE.

CONTRACT DOCUMENTS DATED FEBRUARY 28, 2022, AS PART OF THE BIDDING DOCUMENTS (DRAWINGS AND SPECIFICATIONS) AND SUBSEQUENTLY ISSUED ADDENDA HAVE BEEN MERGED INTO ONE CONFORMING SET OF DOCUMENTS FOR THE CONVENIENCE OF THE CONTRACTOR. IF INCONSISTENCIES OR AMBIGUITIES BETWEEN "CONFORMED" DOCUMENTS AND CONTRACT DOCUMENTS ARE FOUND, THE CONTRACT DOCUMENTS SHALL GOVERN.

This document, and the designs incorporated herein, is an instrument of professional service that has been developed, designed and prepared by Harutunian Engineering, Inc., and is not to be used, in whole or in part, for any other project without giving written notice to Harutunian Engineering, Inc.

REV	DATE	BY	DESCRIPTION
			CONFORMED DOCUMENTS

DESIGNED HEI
DRAWN HEI
CHECKED HEI
DATE NOVEMBER 2022

** ORIGINAL SEALED BY K.A. HARUTUNIAN 02-28-22 TX PE 59181 **

HARUTUNIAN ENGINEERING INCORPORATED
ENGINEERING AND ENVIRONMENTAL CONSULTANTS
8100 CROSS PARK DRIVE
AUSTIN, TEXAS 78754
TBPE REGISTRATION NO. F-2408

carollo
TBPELS No. F-882

CITY OF AUSTIN
FOUNDED 1839

CITY OF AUSTIN

CITY OF AUSTIN
WILD HORSE RANCH WWTP EXPANSION
DEMOLITION
EYE WASH STATION
FIELD INTERFACE WIRING SCHEMATIC - DEMOLITION

VERIFY SCALES
BAR IS ONE INCH ON ORIGINAL DRAWING
0 1"
IF NOT ONE INCH ON THIS SHEET, ADJUST SCALES ACCORDINGLY

JOB NO. 10976A.00
DRAWING NO. 80DN21
SHEET NO. 219 OF 464

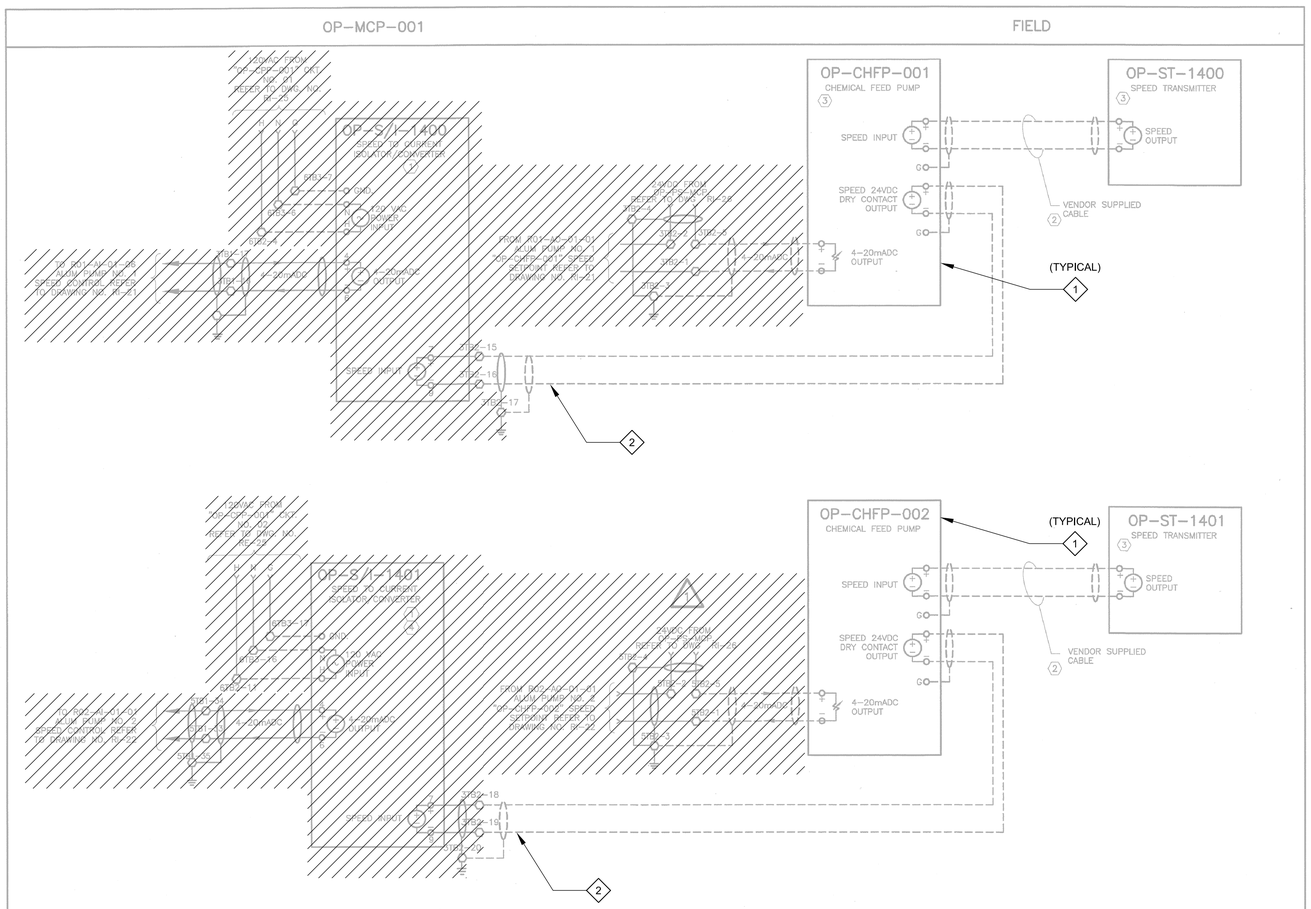

REFERENCE DRAWINGS:

RI-21 – PLC I/O WIRING SCHEMATICS

RE-37 – OPERATIONS BUILDING PANEL SCHEDULE

NOTE: THIS DRAWING IS TYPICAL FOR FUTURE CHEMICAL FEED PUMP "OP-CHFP-003". FUTURE CHEMICAL FEED PUMP "OP-CHFP-003" IS FURNISHED AND INSTALLED BY OTHERS.

WIRING AND TERMINAL DEVICE LEGEND:

- DEVICE WIRING TERMINAL
- TERMINAL BLOCK LOCATED IN CONTROL PANEL "OP-MCP-001". ANY DEVICE SHOWN WITH DEVICE WIRING TERMINALS CONNECTED DIRECTLY TO THESE SYMBOLS WITH SOLID LINES IS ALSO LOCATED IN "OP-MCP-001".
- TERMINAL BLOCK LOCATED IN 480 VOLT MOTOR CONTROL CENTER "OP-MCC-01L" OR "OP-MCC-01R" AS APPLICABLE. ANY DEVICE SHOWN WITH DEVICE WIRING TERMINALS CONNECTED DIRECTLY TO THESE SYMBOLS WITH SOLID LINES IS ALSO LOCATED IN "OP-MCC-01L" OR "OP-MCC-01R" AS APPLICABLE.
- TERMINAL BLOCK LOCATED IN FIELD MOUNTED EQUIPMENT AS NOTED. ANY DEVICE SHOWN WITH DEVICE WIRING TERMINALS CONNECTED DIRECTLY TO THESE SYMBOLS WITH SOLID LINES IS LOCATED IN OR ON THE EQUIPMENT.
- FIELD WIRING

KEY NOTES:

1. FURNISH AND INSTALL SPEED/CURRENT ISOLATOR/CONVERTER. THE PROPOSED ISOLATOR/CONVERTER INPUT POWER SHALL BE 120VAC, 60HZ. THE PROPOSED ISOLATOR/CONVERTER SHALL LINEARLY CONVERT A 24VDC RATED DRY CONTACT INPUT TO A 4-20mADC ANALOG OUTPUT. THE PROPOSED ISOLATOR/CONVERTER SHALL BE AS MANUFACTURED BY "AGM ELECTRONICS", MODEL AUXS100FQA, OR APPROVED EQUAL. CLOSELY AND CAREFULLY COORDINATE THE ANALOG OUTPUT RANGE WITH MECHANICAL AND MAKE ALL FINAL CONNECTIONS PER THE MANUFACTURER'S WIRING DIAGRAMS AND RECOMMENDATIONS.
2. CLOSELY AND CAREFULLY COORDINATE VENDOR SUPPLIED CABLE LENGTH WITH THE PLANS AND THE EQUIPMENT MANUFACTURER AND MAKE ALL FINAL CONNECTIONS.
3. FURNISHED AND INSTALLED BY MECHANICAL. CLOSELY AND CAREFULLY COORDINATE WITH MECHANICAL AND MAKE ALL FINAL CONNECTIONS PER THE MANUFACTURER'S WIRING DIAGRAMS AND RECOMMENDATIONS.
4. FURNISH ONE ADDITIONAL SPEED/CURRENT ISOLATOR/CONVERTER DESIGNATED FOR USE AS A SPARE PART.

GENERAL NOTES:

1. CLOSELY COORDINATE INSTALLATION/LOCATION WITH MECHANICAL.
2. REFER TO PLANS FOR APPROXIMATE LOCATION/MOUNTING DETAILS/ETC., OF THE PROPOSED EQUIPMENT SHOWN HEREIN.
3. NOT ALL CONNECTIONS TO THE PROPOSED PUMPS "OP-CHFP-001" AND "OP-CHFP-002" ARE SHOWN HERE FOR CLARITY.

RECORD DRAWING

THIS CONSTRUCTION DOCUMENT WAS PREPARED USING INFORMATION SUPPLIED BY THE CONTRACTOR TO REPRESENT CONSTRUCTION CHANGES. THIS DOCUMENT IS FOR INFORMATION AND REFERENCE IN CONNECTION WITH THE OWNER'S USE AND OCCUPANCY OF THE PROJECT AND IS NOT INTENDED FOR BID, PERMIT OR CONSTRUCTION.

BY: K.A. Harutunian DATE: 1/5/2007

REUSE OF DOCUMENTS
This document and the ideas and designs incorporated herein as an instrument of professional service has been developed, designed and prepared by Harutunian Engineering, Inc. and is not to be used, in whole or part, for any other project without the written authorization of the City of Austin and Harutunian Engineering, Inc. © 2003

HARUTUNIAN ENGINEERING INCORPORATED
ENGINEERING AND ENVIRONMENTAL CONSULTANTS
305 EAST HUNTLAND DRIVE SUITE 500 AUSTIN, TEXAS 78752

NO.	DATE	REVISION	APPVD
4			
3			
2			
1	1/5/7	RECORD DRAWING	K.A.H.

THE SEAL APPEARING ON THIS DOCUMENT WAS AUTHORIZED BY K. A. HARUTUNIAN, P.E. 59181 ON OCTOBER 18, 2003

WARNING
0 1/2 1
IF THIS BAR DOES NOT MEASURE 1" THEN DRAWING IS NOT TO SCALE

STATE OF TEXAS K. A. HARUTUNIAN 59181 REGISTERED PROFESSIONAL ENGINEER

Dwg. No. RI-7

CITY OF AUSTIN, TEXAS
NORTHEAST INTERIM WASTEWATER TREATMENT PLANT

CHEMICAL FEED PUMPS
INSTRUMENT WIRING SCHEMATIC

Turner Collie & Braden Inc.
ENGINEERS • PLANNERS • PROJECT MANAGERS

Unit PUBLIC WORKS	Scale NONE	Date OCTOBER 2003	
Designed HEI	Checked HEI	Job No. 052-122094-0008	
Drawn HEI	Approved HEI	Sheet 259/327	

KEY NOTES

1. CHEMICAL FEED PUMP, SPEED TRANSMITTER AND INTERCONNECT WIRING SHALL REMAIN AND BE REUSED DURING RENOVATION ACTIVITIES. CONTRACTOR SHALL FIELD VERIFY EXISTING CONDITIONS AND TAKE DETAILED NOTES OF THE EXISTING CHEMICAL FEED PUMP WIRING TERMINATIONS PRIOR TO DISCONNECTING THE FEED PUMP IN ORDER TO RETURN THE PUMP TO SERVICE DURING RENOVATION ACTIVITIES.
2. DISCONNECT EXISTING FIELD WIRING FROM EXISTING SIGNAL ISOLATOR. EXISTING WIRING MAY BE REUSED DURING RENOVATION ACTIVITIES. REFER TO RENOVATION DRAWINGS FOR ADDITIONAL INFORMATION.

GENERAL NOTES:

1. DISCONNECT AND REMOVE THE EXISTING MAIN CONTROL PANEL INSTRUMENTATION AND CONTROL EQUIPMENT (I.E. SIGNAL ISOLATORS,TERMINAL BLOCKS, INTERCONNECT WIRING, CONTROL DEVICES, ETC.) IN THEIR ENTIRETY. REFER TO WIRING SCHEMATICS FOR ADDITIONAL REQUIREMENTS AND INFORMATION. D'd2.
2. DISCONNECT AND REMOVE EXISTING FIELD WIRING AND ASSOCIATED FIELD EQUIPMENT IN THEIR ENTIRETY. REFER TO PLAN DRAWINGS FOR ADDITIONAL INFORMATION.

THIS CONFORMED DOCUMENT IS RELEASED FOR THE CONVENIENCE OF THE CONTRACTOR UNDER THE AUTHORITY OF:

K. A. Harutunian — 11-01-22

K. A. HARUTUNIAN, P.E. — DATE
TX LIC NO. 59181

SEE DISCLAIMER FOR LIMITATIONS OF USE.

CONTRACT DOCUMENTS DATED FEBRUARY 28, 2022, AS PART OF THE BIDDING DOCUMENTS (DRAWINGS AND SPECIFICATIONS) AND SUBSEQUENTLY ISSUED ADDENDA HAVE BEEN MERGED INTO ONE CONFORMING SET OF DOCUMENTS FOR THE CONVENIENCE OF THE CONTRACTOR. IF INCONSISTENCIES OR AMBIGUITIES BETWEEN "CONFORMED" DOCUMENTS AND CONTRACT DOCUMENTS ARE FOUND, THE CONTRACT DOCUMENTS SHALL GOVERN.

This document, and the designs incorporated herein, is an instrument of professional service that has been developed, designed and prepared by Harutunian Engineering, Inc., and is not to be used, in whole or in part, for any other project without giving written notice to Harutunian Engineering, Inc.

REV	DATE	BY	DESCRIPTION
			CONFORMED DOCUMENTS

DESIGNED HEI
DRAWN HEI
CHECKED HEI
DATE NOVEMBER 2022

** ORIGINAL SEALED BY K.A. HARUTUNIAN 02-28-22 TX PE 59181 **

HARUTUNIAN ENGINEERING INCORPORATED
ENGINEERING AND ENVIRONMENTAL CONSULTANTS
8100 CROSS PARK DRIVE AUSTIN, TEXAS 78754
TBPE REGISTRATION NO. F-2408

carollo
TBPELS No. F-882

CITY OF AUSTIN FOUNDED 1839
CITY OF AUSTIN

CITY OF AUSTIN
WILD HORSE RANCH WWTP EXPANSION
DEMOLITION
CHEMICAL FEED PUMP
INSTRUMENT WIRING SCHEMATICS - DEMOLITION

VERIFY SCALES
BAR IS ONE INCH ON ORIGINAL DRAWING
0 1"
IF NOT ONE INCH ON THIS SHEET, ADJUST SCALES ACCORDINGLY

JOB NO. 10976A.00
DRAWING NO. 80DN22
SHEET NO. 220 OF 464

CIVIL LEGEND

EXISTING (OR OTHER CONTRACT)	THIS CONTRACT	
96.5 / 96.5	96.5 / 96.5	CONTOUR LINE
93.6 OR 93.6	93.6 OR 93.6	SPOT ELEVATION
		GROUND SLOPE DESIGNATION
5+00	5+00	ROAD CENTERLINE STATIONING
		GRAVEL ROAD
		EXISTING ROADS TO REMAIN
		CULVERT
CB OR SWI	CB OR SWI	CATCH BASIN, STORMWATER INLET
		MANHOLE
		ELECTRICAL MANHOLE
		ELECTRICAL HANDHOLE
		AREA–LIGHTING BASE
		SURVEY BASE LINE MONUMENT
		SURVEY CONTROL POINT
		STRUCTURE LOCATION POINT
		DRAINAGE WAY OR DITCH
		DRAWING MATCH LINE
		CENTERLINE, BUILDING, ROAD, ETC.
		STAGING, STOCKPILE, AND PLAN HOLDING AREA LIMITS
OR	OR	REMODELED EXISTING PLANT STRUCTURE
OR		EXISTING STRUCTURE
	OR	NEW STRUCTURE–THIS CONTRACT
		GRAVEL AREA
	5	FACILITY NUMBER
	NO.3	STRUCTURE NUMBER
		EXISTING TREES TO REMAIN
		EXISTING FENCE TO REMAIN
		TEMPORARY FENCE
		PERMANENT FENCE
		GATE (SHOWN WITH FENCE TYPES ABOVE)
		POWER POLE WITH GUY SUPPORT
P	P	RELOCATED OVERHEAD POWER LINE
T		UNDERGROUND TELEPHONE LINE
	B–1	SOIL BORING LOCATION AND NUMBER

CURVE DATA

R = RADIUS L = LENGTH

△ = DELTA $\overline{T}$ = SEMITANGENT

NOTES:

1. * SYMBOL – ONLY WHERE REQUIRED FOR CLARITY.
2. IN GENERAL, EXISTING STRUCTURES AND FACILITIES ARE NOTED AS "EXISTING" AND ARE SHOWN IN LIGHT LINE WEIGHTS, OR AS SCREENED BACKGROUND. NEW STRUCTURES ARE SHOWN IN HEAVY LINE WEIGHTS.

CIVIL SYMBOLS

	EXISTING STRUCTURE *
	EXISTING STRUCTURE TO BE REMOVED *
	EXISTING AC PAVEMENT *
	NEW AC PAVEMENT *
	GRAVEL SURFACE *
	CONCRETE WALK *
3:1	EXISTING EMBANKMENT SLOPE AS INDICATED
4:1	NEW EMBANKMENT SLOPE AS INDICATED
	LIMITS OF TOPSOIL AND SEEDING (UNLESS OTHERWISE NOTED)
	DRAINAGE DITCH SHOWING DIRECTION OF FLOW
× 1000.0	EXISTING GRADE
⊗ 1000.0	FINISH GRADE
1000	EXISTING CONTOUR
1000	CONTOUR
	BENCHMARK
	PI (POINT OF INTERSECTION)
35.7	VPI (VERTICAL POINT OF INTERSECTION) AND FINISH GRADE ELEVATION
42.6 OR 42.6 ×	ELEVATION ORIGINAL GROUND
	HORIZONTAL CONTROL POINT
	VERTICAL CONTROL POINT
	RADIAL POINT
TP–2	TEST PIT LOCATION AND NUMBER
B–1	BORING LOCATION AND NUMBER
TH 3	SUE INVESTIGATION TEST HOLE
	EXISTING UTILITY OR TELEPHONE POLE
	NEW UTILITY OR TELEPHONE POLE
MH	EXISTING MANHOLE
MH	NEW MANHOLE
	EXISTING CATCH BASIN
	NEW CATCH BASIN
	DI (DROP INLET)
	BRASS CAP/SURVEY MARKER
	FOUND SIZE" IRON ROD
	FOUND SIZE" IRON ROD
	SET SIZE" IRON ROD
	SET SIZE" IRON ROD
	FOUND IRON PIPE
	SET PK NAIL
	SET LEAD PLUG WITH TACK
(S10–09–15E 37.09')	DATA OF RECORD
2	DATA OF RECORD
3	BLOCK NUMBER

	ROCKS
	EXISTING TREES AND SHRUBS
	ROAD
	RAILROAD TRACKS
	SIGN
	LIGHT STANDARD
	PROPERTY LINE/RIGHT OF WAY
	FENCE
	CHAIN–LINK RAILING
	ALUMINUM HANDRAIL
	EASEMENT LINE
	STREET CENTERLINE
	SURVEY OR SUBDIVISION BOUNDARY
FT FT	MULCH FILTER TUBE
SF SF	SILT FENCING
TP TP	TREE PROTECTION
LOC	LIMITS OF CONSTRUCTION
	PLANT GRID
	TREE TO BE REMOVED
	TREE TO REMAIN
	RIMROCK
	RIMROCK BUFFER BOUNDARY
	WATER QUALITY TRANSITION ZONE
CWQZ	CRITICAL WATER QUALITY ZONE
100YR	100 YEAR FLOOD PLAIN
500YR	500 YEAR FLOOD PLAIN
	STABILIZED CONSTRUCTION ENTRANCE
	ROCK BERM

PROFILE NUMBER / DRAWING NUMBER PROFILE IS ON: PROFILE–X / X–X–X	PIPE / DUCTBANK PROFILE
COORDINATES BASED ON PLANT COORDINATE GRID: N2000 / E5000	COORDINATE CALLOUT

THIS CONFORMED DOCUMENT IS RELEASED FOR THE CONVENIENCE OF THE CONTRACTOR UNDER THE AUTHORITY OF:

CASEY G. WAUTERS, P.E. — 11-01-22 DATE

TX LIC NO. 93889

SEE DISCLAIMER FOR LIMITATIONS OF USE.

CONTRACT DOCUMENTS DATED JUNE 10, 2022, AS PART OF THE BIDDING DOCUMENTS (DRAWINGS AND SPECIFICATIONS) AND SUBSEQUENTLY ISSUED ADDENDA HAVE BEEN MERGED INTO ONE CONFORMING SET OF DOCUMENTS FOR THE CONVENIENCE OF THE CONTRACTOR. IF INCONSISTENCIES OR AMBIGUITIES BETWEEN "CONFORMED" DOCUMENTS AND CONTRACT DOCUMENTS ARE FOUND, THE CONTRACT DOCUMENTS SHALL GOVERN.

REV	DATE	BY	DESCRIPTION
			CONFORMED DOCUMENTS

DESIGNED CW | DRAWN AW | CHECKED SGE | DATE FEBRUARY 2022

** ORIGINAL SEALED BY CASEY G. WAUTERS, P.E. 2/28/2022 TX PE 93889 **

AECOM TECHNICAL SERVICES INC.
13640 BRIARWICK DRIVE, SUITE 200
AUSTIN, TEXAS 78729
WWW.AECOM.COM
TBPE REG. NO. F-3580

carollo
TBPE No. F-882

CITY OF AUSTIN

CITY OF AUSTIN
WILD HORSE RANCH WWTP EXPANSION
CIVIL
CIVIL LEGEND AND SYMBOLS

VERIFY SCALES
BAR IS ONE INCH ON ORIGINAL DRAWING
0 — 1"
IF NOT ONE INCH ON THIS SHEET, ADJUST SCALES ACCORDINGLY

JOB NO. 10976A.10
DRAWING NO. 00GC01
SHEET NO. 221 OF 464

LAST SAVED BY: dseivert

PROJECT NO. 9585A10 FILE NAME: 9585A10_SheetSeed.dgn

GENERAL NOTES

1. THE CONTRACT SPECIFICATIONS CONTAINED IN THE PROJECT MANUAL HAVE PRECEDENT OVER CITY OF AUSTIN SPECIFICATIONS. FOR ITEMS NOT COVERED BY THE PROJECT MANUAL SPECIFICATIONS, THE "CITY OF AUSTIN STANDARD SPECIFICATIONS" AS AMENDED BY SPECIAL PROVISION, CURRENT AT THE TIME OF BIDDING ARE TO GOVERN MATERIALS AND METHODS USED TO DO THIS WORK. UNLESS OTHERWISE NOTED, ANY REVISIONS MADE AFTER BIDDING DO NOT APPLY.
2. THE CITY SPECIFICATION ITEM 509S WILL BE REQUIRED AS A MINIMUM TRENCH SAFETY MEASURE. CONTRACT DOCUMENTS WHICH INCLUDE A TRENCH SAFETY PLAN AND A PAY ITEM FOR TRENCH SAFETY MEASURES, IN COMPLIANCE WITH TEXAS HEALTH AND SAFETY CODE, TITLE 9, CHAPTER 756, SUBCHAPTER C, MUST BE RECEIVED BY THE TRANSPORTATION AND PUBLIC SERVICES CONTRACT ADMINISTRATION OFFICE BEFORE BEGINNING WORK ON THE PROJECT.
3. ALL MATERIALS TESTS, INCLUDING SOIL DENSITY TESTS AND RELATED SOIL ANALYSES, TO BE ACCOMPLISHED BY AN INDEPENDENT LABORATORY FUNDED BY THE CITY OF AUSTIN, UNLESS NOTED OTHERWISE.
4. CONTRACTOR TO TAKE ALL DUE PRECAUTIONS TO PROTECT EXISTING FACILITIES FROM DAMAGE. CONCEALED AND BURIED FACILITIES (PIPING, CONDUIT, DUCTBANK, ETC.) ARE NOT EXEMPT FROM THIS REQUIREMENT. CONTRACTOR IS TO UTILIZE ALL APPLICABLE METHODS AND TECHNOLOGIES TO ENSURE THE EXISTING FACILITIES ARE IDENTIFIED, LOCATED AND PROTECTED. ANY DAMAGE TO EXISTING FACILITIES INCURRED AS A RESULT OF THESE CONSTRUCTION OPERATIONS TO BE REPAIRED IMMEDIATELY BY THE CONTRACTOR, AT NO ADDITIONAL COST TO OWNER.
5. CONTRACTOR TO GIVE A MINIMUM OF 48 HOURS NOTICE TO ALL AUTHORIZED INSPECTORS, SUPERINTENDENTS, OR PERSONS IN CHARGE OF PRIVATE AND PUBLIC UTILITIES AFFECTED BY CONTRACTOR'S OPERATIONS PRIOR TO COMMENCEMENT OF WORK. CONTRACTOR TO ASSURE THAT ALL CONSTRUCTION PERMITS HAVE BEEN OBTAINED PRIOR TO COMMENCEMENT OF WORK. REQUIRED PERMITS THAT CAN ONLY BE ISSUED TO CONTRACTOR TO BE OBTAINED AT CONTRACTOR'S EXPENSE.
6. CONTRACTOR TO COMPLY WITH ALL APPLICABLE LOCAL, STATE, AND FEDERAL REQUIREMENTS REGARDING EXCESS AND WASTE MATERIAL, INCLUDING METHODS OF HANDLING AND DISPOSAL.
7. CONTRACTOR TO COORDINATE INTERRUPTIONS OF ALL UTILITIES AND SERVICES. ALL WORK TO BE IN ACCORDANCE WITH THE REQUIREMENTS OF THE APPLICABLE UTILITY COMPANY OR AGENCY INVOLVED.
8. INTERRUPTION OF WASTEWATER FLOWS THROUGH EXISTING PROCESS FACILITIES IS NOT PERMITTED WITHOUT PRIOR WRITTEN APPROVAL. SUBMIT TO ENGINEER CONSTRUCTION PLAN WHICH DETAILS SCHEDULE AND TECHNIQUES TO BE USED FOR REVIEW PRIOR TO ANY CONNECTIONS TO EXISTING PIPES OR STRUCTURES. PARTIAL INTERRUPTION OF FLOWS IS TO BE SCHEDULED DURING LOW FLOW PERIODS FOR AS SHORT A DURATION AS PRACTICAL. MAKE PROVISIONS FOR ACCOMMODATING PEAK FLOWS WHICH MAY OCCUR DURING CONSTRUCTION OPERATIONS. ENGINEER AND PLANT SUPERINTENDENT TO BE NOTIFIED WHEN ANY INTERRUPTIONS ARE TO BE MADE.
9. LOCATION OF EXISTING UTILITIES SHOWN ON PLANS WAS COMPILED FROM RECORD INFORMATION AND SOME SUBSURFACE UTILITY ENGINEERING DATA. NO WARRANTY IS IMPLIED AS TO THE ACTUAL LOCATION.
10. WHEN UNLOCATED OR INCORRECTLY LOCATED UNDERGROUND PIPING, OR A BREAK LOCATED IN THE LINE, OR OTHER UTILITIES AND SERVICES ARE ENCOUNTERED DURING SITE WORK OPERATIONS, NOTIFY THE APPLICABLE UTILITY COMPANY IMMEDIATELY TO OBTAIN PROCEDURE DIRECTIONS. COOPERATE WITH THE APPLICABLE UTILITY COMPANY IN MAINTAINING ACTIVE SERVICES IN OPERATION.
11. CONTRACTOR TO LOCATE, PROTECT, AND MAINTAIN BENCHMARKS, MONUMENTS, CONTROL POINTS, AND PROJECT ENGINEERING REFERENCE POINTS. REESTABLISH DISTURBED OR DESTROYED ITEMS BY REGISTERED PUBLIC SURVEYOR IN THE STATE OF TEXAS, AT NO ADDITIONAL COST TO OWNER.
12. CONTRACTOR TO CONTROL DUST CAUSED BY THE WORK AND COMPLY WITH POLLUTION CONTROL REGULATIONS OF GOVERNING AUTHORITIES. (NO SEPARATE PAY)
13. THROUGHOUT THE CONSTRUCTION, AND AT THE COMPLETION OF CONSTRUCTION, THE CONTRACTOR TO ENSURE THAT DRAINAGE OF STORM WATER RUNOFF IS NOT BLOCKED. DO NOT BLOCK DRAINAGE FROM ADJACENT AREAS NOR ADD FLOW TO ADJACENT AREAS.
14. THESE PLANS, PREPARED BY THE ENGINEER. DO NOT EXTEND TO OR INCLUDE DESIGNS OR SYSTEMS PERTAINING TO THE SAFETY OF THE CONSTRUCTION CONTRACTOR OR ITS EMPLOYEES, AGENTS, OR REPRESENTATIVES IN THE PERFORMANCE OF THE WORK. THE SEAL OF ENGINEER'S REGISTERED PROFESSIONAL ENGINEER(S) HEREON DOES NOT EXTEND TO ANY SUCH SAFETY SYSTEMS THAT MAY NOW OR HEREAFTER BE INCORPORATED INTO THESE PLANS. THE CONSTRUCTION CONTRACTOR TO PREPARE OR OBTAIN THE APPROPRIATE SAFETY SYSTEMS.
15. CONTRACTOR TO KEEP ACCESS ROAD TO EXISTING PLANT OPEN AT ALL TIMES. AREA USED FOR CONTRACTOR'S PERSONNEL PARKING, MATERIAL STORAGE, STOCKPILE, MATERIAL FABRICATION, AND RELATED CONSTRUCTION USES WILL NOT BE ALLOWED TO INTERFERE WITH NORMAL PLANT OPERATION, UNLESS OTHERWISE APPLIED BY THE CONTRACTOR AND APPROVED BY THE OWNER.
16. BLASTING IS NOT ALLOWED ON THIS PROJECT.
17. BURNING IS NOT ALLOWED ON THIS PROJECT.
18. REFER TO LOCATION KEY MAP DRAWING FOR LOCATION OF BENCHMARKS.
19. PLANT COORDINATES SHOWN FOR STRUCTURE LOCATIONS ARE REFERENCED TO OUTSIDE FACE OF CONCRETE FOUNDATION AT FINISHED GRADE OR TO CENTERLINE OF STRUCTURE, UNLESS NOTED OTHERWISE ON PLANS.

GENERAL NOTES (CONTINUED)

20. THE FINISHED GRADE ELEVATIONS SHOWN ARE INTENDED TO PROVIDE DRAINAGE AWAY FROM THE FACILITIES. MINOR FIELD CHANGES MAY BE NECESSARY TO PROVIDE ADEQUATE DRAINAGE. GRADE UNIFORMLY BETWEEN ELEVATIONS SHOWN TO PROVIDE DRAINAGE.
21. MAINTAIN DRAINAGE OF SITE DURING ALL PHASES OF CONSTRUCTION; DO NOT BLOCK DRAINAGE FROM ADJACENT AREAS NOR ADD FLOW TO ADJACENT AREAS.
22. ALL EXCESS EXCAVATED MATERIAL AND SOIL TO BECOME PROPERTY OF CONTRACTOR AND TO BE REMOVED FROM SITE (NO SEPARATE PAY). NO DISPOSAL IS PERMITTED IN THE 100-YEAR FLOOD PLAIN OR WATERS OF THE U.S. OF ANY SITE WITHOUT PROPER PERMITTING BY THE CONTRACTOR.
23. THE ATTENTION OF ALL PROSPECTIVE BIDDERS IS DIRECTED TO THE STATE LAW, VERNON'S ANNOTATED TEXAS STATUTES, ARTICLE 1436 (C) AND THE NEED FOR EFFECTIVE PRECAUTIONARY MEASURES WHEN OPERATING IN THE VICINITY OF ELECTRICAL LINES. IF THE CONTRACTOR CHOOSES TO USE EQUIPMENT WITH THE POTENTIAL OF COMING WITHIN THE DISTANCES PROSCRIBED BY STATUTE, THE CONTRACTOR IS RESPONSIBLE FOR COORDINATION OF THE WORK WITH THE APPROPRIATE ELECTRIC UTILITY COMPANY. ALL COSTS ASSOCIATED WITH THIS EFFORT ARE TO BE BORN BY CONTRACTOR.
24. ALL SITE WORK MUST COMPLY WITH ENVIRONMENTAL REQUIREMENTS.
25. ANY EXISTING PAVEMENT, CURBS, AND/OR SIDEWALK DAMAGED OR REMOVED BY THE CONTRACTOR ARE TO BE REPAIRED BY THE CONTRACTOR TO AT LEAST THE PRE-EXISTING CONDITION AT CONTRACTOR'S EXPENSE BEFORE ACCEPTANCE OF THE WORK.
26. UPON COMPLETION OF THE PROJECT SITE IMPROVEMENTS AND PRIOR TO THE INSTALLATION OF AN ELECTRIC OR WATER METER, THE ENGINEER SHALL CERTIFY IN WRITING THAT THE PROPOSED DRAINAGE, FILTRATION AND DETENTION FACILITIES WERE CONSTRUCTED IN ACCORDANCE WITH THE APPROVED PLANS.
27. CONTRACTOR IS ADVISED THAT THE EXISTING PAINT AND PIPE JOINTS CONTAIN LEAD. CONTRACTOR MUST COMPLY WITH ALL APPLICABLE OSHA SAFETY REQUIREMENTS TO PROTECT ITS WORKERS AND PLANT PERSONNEL AND MUST EXERCISE APPROPRIATE REGULATORY SAFETY PRECAUTIONS THROUGHOUT THE PERFORMANCE OF THIS WORK, TO INCLUDE PRECAUTIONS TO AVOID EXHAUSTING HAZARDOUS MATERIALS, PERSONNEL SAFETY, AND PROPERLY DISPOSING OF WASTE MATERIALS.
28. IN ADDITION TO THE PRE-CONSTRUCTION PHOTOGRAPHS SPECIFIED BY "SECTION 01380 – CONSTRUCTION PHOTOGRAPHS", CONTRACTOR SHALL WALK THE WORK AREAS WITH OWNER AND SHALL VIDEO RECORD THE WORKING AREAS BEFORE STARTING ANY WORK. A COPY OF THE VIDEO RECORD SHALL BE MADE AVAILABLE TO THE OWNER AFTER THE SITE WALK AND BEFORE STARTING CONSTRUCTION WORK.
29. CONTRACTOR SHALL KEEP ALL STORAGE AREAS WEED FREE AND MOWED. ALL TRASH AND DEBRIS SHALL BE REMOVED EVERY FRIDAY.
30. REPLACE EXISTING ROADWAY THAT IS CUT BY PIPE TRENCHES WITH SIMILAR ROADWAY.
31. ADJUST MANHOLE COVERS, VALVE BOXES, ELECTRICAL MANHOLES, ETC. TO MATCH PROPOSED FINISHED GRADE (NO SEPARATE PAY).
32. CONTRACTOR TO NOT OBSTRUCT DELIVERIES ON THE PLANT ACCESS ROAD. WORK WITHIN THE ACCESS ROAD MUST BE DONE IN A WAY THAT PROVIDES DELIVERY ACCESS. ACCESS ROAD CLOSURES MUST BE AGREED UPON WITH THE CITY OF AUSTIN IN ADVANCE.
33. TRAFFIC CONTROLS DURING CONSTRUCTION TO BE CONTRACTOR'S RESPONSIBILITY AND INSTALLED IN ACCORDANCE WITH THE MANUAL ON UNIFORM TRAFFIC CONTROL DEVICES.
34. DURING CONSTRUCTION, THE STORM WATER RUNOFF FROM ALL DISTURBED AREAS TO BE FILTERED BY SILT FENCES AND/OR ROCK BERMS AS SHOWN ON THE PLANS. THESE TEMPORARY EROSION AND SEDIMENTATION CONTROLS ARE TO REMAIN IN PLACE UNTIL THE DISTURBED AREAS ARE REVEGETATED AND THE AREAS HAVE BECOME PERMANENTLY STABILIZED. ALL TEMPORARY EROSION AND SEDIMENTATION CONTROLS TO BE INSPECTED PERIODICALLY FOR DAMAGE CAUSED BY CONSTRUCTION ACTIVITIES AND FOLLOWING EVERY RAINFALL. DAMAGED OR OBSTRUCTED CONTROLS TO BE REPAIRED/REPLACED AS NECESSARY TO MAINTAIN THEIR PROPER OPERATION.
35. DEMOLITION PERMITS (IF NEEDED) ARE TO BE OBTAINED BY THE CONTRACTOR.
36. ALL ABANDONED UTILITIES REMOVED TO FACILITATE CONSTRUCTION TO BECOME PROPERTY OF CONTRACTOR AND TO BE REMOVED FROM SITE (NO SEPARATE PAY).
37. CONTRACTOR SHALL MAINTAIN A MINIMUM OF 5 FEET BETWEEN THE EDGE OF AN OPEN TRENCH AND ANY UTILITY POLE. IN THE EVENT THE 5 FEET MIMIMUM SEPARATION CAN NOT BE MAINTAINED, THE CONTRACTOR SHALL NOTIFY THE UTILITY OWNER FOR NECESSARY POLE STABILIZATION REQUIREMENTS.
38. CONTRACTOR SHALL KEEP ALL STREETS FREE OF MUD AND DEBRIS. CONTRACTOR SHALL WASH DOWN STREETS AS NECESSARY TO REMOVE DIRT AND DEBRIS. ALL ASSOCIATED COSTS ARE SUBSIDIARY TO THE PROJECT.

AMERICANS WITH DISABILITIES ACT

THE CITY OF AUSTIN HAS REVIEWED THIS PLAN FOR COMPLIANCE WITH CITY DEVELOPMENT REGULATIONS ONLY. THE APPLICANT, PROPERTY OWNER, AND OCCUPANT OF THE PREMISES ARE RESPONSIBLE FOR DETERMINING WHETHER THE PLAN COMPLIES WITH ALL OTHER LAWS, REGULATIONS, AND RESTRICTIONS WHICH MAY BE APPLICABLE TO THE PROPERTY AND ITS USE.

STORMWATER CONSTRUCTION NOTES

1. ALL AGGREGATE USED ONSITE FOR THE CONSTRUCTION OF BERMS, STABILIZED CONSTRUCTION ENTRANCES, HAUL ROADS, SWALES OR ANY OTHER USE MUST BE NATIVE ROCK MATERIAL.
2. VOIDS FOUND ONSITE WILL BE MITIGATED IN ACCORDANCE WITH APPLICABLE REGULATIONS AND WITH VOID AND WATER FLOW MITIGATION DETAILS AND DIRECTION PROVIDED BY OWNER.
3. ALL DISTURBED AREAS MUST BE REVEGETATED IN ACCORDANCE WITH CITY OF AUSTIN STANDARD SPECIFICATION 604S.
4. PORTABLE TOILET LOCATIONS SHALL HAVE SECONDARY CONTAINMENT AND SHALL BE ANCHORED TO PREVENT OVER TURNING.

GENERAL CONSTRUCTION NOTES

1. ALL RESPONSIBILITY FOR THE ADEQUACY OF THESE PLANS REMAINS WITH THE ENGINEER WHO PREPARED THEM. IN REVIEWING THESE PLANS, THE CITY OF AUSTIN MUST RELY ON THE ADEQUACY OF THE WORK OF THE DESIGN ENGINEER.
2. CONTRACTOR SHALL CALL TEXAS 811 (811, 1-800-545-6005) FOR UTILITY LOCATIONS PRIOR TO ANY WORK IN CITY EASEMENTS OR STREET R.O.W.
3. CONTRACTOR SHALL NOTIFY THE DEPARTMENT OF PUBLIC WORKS AND TRANSPORTATION (DPWT) AT 974-7161 AT LEAST 24 HOURS PRIOR TO THE INSTALLATION OF ANY DRAINAGE FACILITY WITHIN A DRAINAGE EASEMENT OR STREET R.O.W. THE METHOD OF PLACEMENT AND COMPACTION OF BACKFILL IN THE CITY'S R.O.W. MUST BE APPROVED PRIOR TO THE START OF BACKFILL OPERATIONS.
4. ALL CONSTRUCTION OPERATIONS SHALL BE ACCOMPLISHED IN ACCORDANCE WITH APPLICABLE REGULATIONS OF THE U.S. OCCUPATIONAL SAFETY AND HEALTH ADMINISTRATION. (OSHA STANDARDS MAY BE PURCHASED FROM THE GOVERNMENT PRINTING OFFICE; INFORMATION AND RELATED REFERENCE MATERIALS MAY BE PURCHASED FROM OSHA, 611 EAST 6TH STREET, AUSTIN TEXAS.)
5. ALL SITE WORK MUST ALSO COMPLY WITH ENVIRONMENTAL REQUIREMENTS.
6. REFERENCE "KEYMAP" DRAWING FOR DESCRIPTION OF COORDINATES AND BEARING SYSTEM USED ON THIS PROJECT.
7. SURVEY INFORMATION FOR THE WILD HORSE RANCH WWTP PROJECT SITE WAS OBTAINED FROM ZAMORA LLC FROM JANUARY TO APRIL 2020.

REFERENCE DRAWINGS

1. RECORD DRAWINGS FROM VARIOUS PLANT PROJECTS ARE PROVIDED AS REFERENCE DRAWINGS TO SHOW EXISTING FACILITIES WITHIN THE PLANT, AT VARYING TIMELINES. THE RECORD DRAWINGS AND THE EXISTING FACILITIES ARE SHOWN WITH GRAY LINE TO DIFFERENTIATE FROM PROPOSED IMPROVEMENTS.
2. THE REFERENCE DRAWINGS INCLUDED IN THIS CONTRACT WERE SELECTED FROM PREVIOUS CONSTRUCTION CONTRACTS AND THESE DRAWINGS DEFINE WORK THAT WAS DONE DURING THOSE CONTRACTS.
3. THE WORK THAT IS PART OF THIS CONTRACT IS SHOWN WITH SOLID, BLACK LINE. CONTRACTOR TO DISREGARD ANY WORK SHOWN WITH THIN, GRAY LINE OR GRAY TEXT, SINCE THAT WORK WAS PART OF PREVIOUS CONTRACTS.
4. SOME INFORMATION ON THE REFERENCE DRAWINGS MAY BE DIFFERENT FROM THE ACTUAL FIELD CONDITIONS.
5. MORE THAN ONE REFERENCE DRAWING MAY BE USED TO SHOW EXISTING CONDITIONS OF THE SAME PLANT AREA. THESE DRAWINGS MAY SHOW DIFFERENT CONDITIONS FOR THE SAME AREA, WHICH MAY BE ATTRIBUTABLE TO THE VARYING TIMELINES. CONTRACTOR TO CHECK THE DATE DRAWINGS WERE ISSUED TO DETERMINE THE MOST RECENT CONDITIONS.
6. PARTS OF THE RECORD DRAWINGS ARE USED AS BACKGROUND TO DEPICT THE PROPOSED WORK. CONTRACTOR TO DISREGARD ANY WORK DIRECTIVES FOUND IN THE REFERENCE DRAWINGS. ACTUAL FIELD CONDITIONS MAY BE DIFFERENT FROM THE CONDITIONS SHOWN IN THE RECORD DRAWINGS BACKGROUND.
7. CONTRACTOR TO FIELD VERIFY INSTALLED CONDITIONS IMPACTING OR IMPACTED BY THIS WORK PRIOR TO INITIATING WORK.

PIPING NOTES

1. PRESSURE RATING OF VALVES, FITTINGS, AND APPURTENANCES IS TO EQUAL OR EXCEED PRESSURE RATING OF ADJACENT PIPELINE.
2. THE CONTRACTOR TO PROVIDE FITTINGS, PLUGS, AND OTHER DEVICES FOR USE IN FILLING, FLUSHING, TESTING, ETC.
3. CONTRACTOR TO PROVIDE ADEQUATE THRUST BLOCKING TO WITHSTAND TEST PRESSURES.
4. DO NOT EXCEED MANUFACTURER'S RECOMMENDATION FOR CURVATURE OF LINES AND/OR DEFLECTION OF PIPE JOINTS. INSTALL JOINTS AS REQUIRED.
5. PIPELINES TO BE CONSTRUCTED OF THE MATERIALS SPECIFIED ON PLANS.
6. ALL UNDERGROUND DUCTILE IRON PIPE VALVES AND FITTINGS TO BE WRAPPED WITH AT LEAST 8-MIL POLYETHYLENE WRAP, IN ACCORDANCE WITH THE PROCEDURES SET FORTH IN AWWA C 105.

OTHERWISE NOTED. WHERE DUCTILE IRON PIPE ENTERS STRUCTURES, CONNECT TO WALL PIPE WITH MECHANICAL JOINTS USING EPOXY-COATED NUTS AND BOLTS, UNLESS OTHERWISE NOTED ON PLANS.

8. PIPING DRAWINGS INDICATE INVERT ELEVATIONS FOR GRAVITY FLOW LINES. SLOPE PIPE UNIFORMLY BETWEEN ELEVATIONS SHOWN; NO VALLEYS OR PEAKS PERMITTED IN GRAVITY FLOW LINES. FOR OTHER PIPING, REFER TO DETAIL SHEETS FOR PIPE ELEVATIONS AT EACH STRUCTURE. SITE PIPING DRAWINGS DO NOT INDICATE VERTICAL BENDS AND TRANSITIONS. WHEN NECESSARY, MAKE VERTICAL TRANSITIONS OR FURNISH AND INSTALL VERTICAL BENDS AT NO EXTRA COST. DO NOT EXCEED MANUFACTURER'S RECOMMENDATIONS FOR CURVATURE OF LINES AND/OR DEFLECTION OF PIPE JOINTS.
9. YARD PIPE LOCATIONS SHOWN ARE APPROXIMATE. FIELD VERIFY LOCATION OF EXISTING PIPE. ARRANGE NEW PIPING AS NECESSARY TO AVOID INTERFERENCE AND PROVIDE CLEARANCES NOTED.
10. MAINTAIN MINIMUM CLEARANCE OF THREE (3) FEET FROM EDGE OF STRUCTURES TO CLOSEST EDGE OF PIPELINE ADJACENT AND PARALLEL TO EDGE OF STRUCTURE, UNLESS OTHERWISE NOTED ON PLANS.
11. PLACE PARALLEL PIPING IN COMMON TRENCH WHEN FEASIBLE, MAINTAINING MINIMUM TWO-FOOT (2') HORIZONTAL CLEARANCE.
12. UNLESS OTHERWISE INDICATED, ABOVE-GROUND FITTINGS TO BE FLANGED DUCTILE IRON.
13. DIELECTRIC CONNECTIONS TO BE PREVENTED BY USE OF NON-CONDUCTIVE GASKETS BETWEEN DISSIMILAR PIPING MATERIALS.

HANGERS AND SUPPORTS

1. CONTRACTOR IS RESPONSIBLE FOR FURNISHING, AND INSTALLING HANGERS AND SUPPORTS FOR ALL PIPING AND VALVES TO PREVENT SAGGING AND LATERAL MOVEMENT, AND TO PREVENT TRANSFERRING STRESS TO EQUIPMENT OR COUPLINGS.
2. TRAPEZE HANGERS ARE PERMITTED, PROVIDED PIPES ARE AT THE SAME ELEVATION AND PARALLEL, AND ROLLER SUPPORTS ARE PROVIDED FOR EACH PIPE.
3. PERFORATED STRAP HANGERS ARE NOT ACCEPTABLE.
4. HANGER RODS TO BE SIZED AS REQUIRED TO ADEQUATELY SUSPEND THE EQUIPMENT WITH A MINIMUM FACTOR OF SAFETY OF 2.
5. PIPE HANGERS AND SUPPORTS TO BE COATED IN ACCORDANCE WITH SPECIFICATION ITEM "PAINTING AND PROTECTIVE COATING" BEFORE INSTALLATION, UNLESS OTHERWISE NOTED ON PLANS. TWO NUTS TO BE PROVIDED (ONE FOR LOCKING PURPOSES) ON ALL HANGER RODS AND SUPPORTS.
6. ALL SUPPORTS TO BE SECURELY FASTENED.

THIS CONFORMED DOCUMENT IS RELEASED FOR THE CONVENIENCE OF THE CONTRACTOR UNDER THE AUTHORITY OF:

CASEY G. WAUTERS, P.E. — 11-01-22 DATE
TX LIC NO. 93889

SEE DISCLAIMER FOR LIMITATIONS OF USE.

CONTRACT DOCUMENTS DATED JUNE 10, 2022, AS PART OF THE BIDDING DOCUMENTS (DRAWINGS AND SPECIFICATIONS) AND SUBSEQUENTLY ISSUED ADDENDA HAVE BEEN MERGED INTO ONE CONFORMING SET OF DOCUMENTS FOR THE CONVENIENCE OF THE CONTRACTOR. IF INCONSISTENCIES OR AMBIGUITIES BETWEEN "CONFORMED" DOCUMENTS AND CONTRACT DOCUMENTS ARE FOUND, THE CONTRACT DOCUMENTS SHALL GOVERN.

REV	DATE	BY	DESCRIPTION
			CONFORMED DOCUMENTS

DESIGNED CW | DRAWN AW | CHECKED SGE | DATE FEBRUARY 2022

** ORIGINAL SEALED BY CASEY G. WAUTERS, P.E. 2/28/2022 TX PE 93889 **

AECOM TECHNICAL SERVICES INC.
13640 BRIARWICK DRIVE, SUITE 200
AUSTIN, TEXAS 78729
WWW.AECOM.COM
TBPE REG. NO. F-3580

carollo
TBPE No. F-882

CITY OF AUSTIN
FOUNDED 1839
CITY OF AUSTIN

CITY OF AUSTIN
WILD HORSE RANCH WWTP EXPANSION
CIVIL
GENERAL CIVIL CONSTRUCTION NOTES (SHEET 1 OF 2)

VERIFY SCALES
BAR IS ONE INCH ON ORIGINAL DRAWING
0 — 1"
IF NOT ONE INCH ON THIS SHEET, ADJUST SCALES ACCORDINGLY

JOB NO. 10976A.10
DRAWING NO. 00GC02
SHEET NO. 222 OF 464

LAST SAVED BY: dseivert

PROJECT NO. 9585A10 FILE NAME: 9585A10_SheetSeed.dgn

STANDARD CONSTRUCTION NOTES

OCTOBER 1, 2021

1. THE CITY STANDARD CONSTRUCTION SPECIFICATIONS CURRENT AT THE TIME OF BIDDING SHALL COVER MATERIALS AND METHODS USED TO DO THIS WORK.

2. CONTRACTOR MUST OBTAIN A ROW PERMIT FROM AUSTIN TRANSPORTATION DEPT, RIGHT OF WAY MANAGEMENT DIVISION BEFORE BEGINNING CONSTRUCTION WITHIN THE RIGHT-OF-WAY OF A PUBLIC STREET OR ALLEY. ACTIVITY WITHIN RIGHT-OF-WAY SHALL COMPLY WITH APPROVED TCP.

3. AT LEAST 48 HOURS PRIOR TO BEGINNING ANY UTILITY CONSTRUCTION ACTIVITY IN PUBLIC ROW OR PUBLIC EASEMENT, THE CONTRACTOR SHALL NOTIFY THE APPLICABLE CITY OF AUSTIN INSPECTION GROUP (AUSTIN TRANSPORTATION, DEVELOPMENT SERVICES, OR PUBLIC WORKS). SEE CURRENT NOTIFICATION REQUIREMENTS AT WWW.AUSTINTEXAS.GOV.

4. THE CONTRACTOR SHALL CONTACT THE AUSTIN AREA "ONE CALL" SYSTEM AT 1-800-344-8377 FOR EXISTING UTILITY LOCATIONS PRIOR TO ANY EXCAVATION IN ADVANCE OF CONSTRUCTION. THE CONTRACTOR SHALL VERIFY THE LOCATIONS OF ALL UTILITIES TO BE EXTENDED, TIED TO, OR ALTERED, OR SUBJECT TO DAMAGE/INCONVENIENCE BY THE CONSTRUCTION OPERATIONS. THE CITY OF AUSTIN WATER AND WASTEWATER MAINTENANCE RESPONSIBILITY ENDS AT R.O.W./EASEMENT LINES.

5. NO OTHER UTILITY SERVICE/APPURTENANCES SHALL BE PLACED NEAR THE PROPERTY LINE, OR OTHER ASSIGNED LOCATION DESIGNATED FOR WATER AND WASTEWATER UTILITY SERVICE THAT WOULD INTERFERE WITH THE WATER AND WASTEWATER SERVICES.

6. MINIMUM TRENCH SAFETY MEASURES SHALL BE PROVIDED, AS REQUIRED BY OSHA, CITY SPECIFICATION 509S, AND CITY/COUNTY CONSTRUCTION INSPECTORS.

7. ALL MATERIALS TESTS ORDERED BY THE OWNER FOR QUALITY ASSURANCE PURPOSES, SHALL BE CONDUCTED BY AN INDEPENDENT LABORATORY AND FUNDED BY THE OWNER IN ACCORDANCE WITH CITY STANDARD SPECIFICATION ITEM 1804S.04.

8. PRESSURE TAPS SHALL BE ALLOWED ON A CASE BY CASE BASIS, AS DETERMINED BY THE DIRECTOR'S DESIGNEE. NORMALLY PRESSURE TAPS 4 INCHES AND LARGER SHALL BE ALLOWED IN THE FOLLOWING CASES: A) A TEST SHUT OUT INDICATES AN ADEQUATE SHUT OUT TO PERFORM THE WORK IS NOT FEASIBLE B) MORE THAN 30 CUSTOMERS OR A SINGLE CRITICAL CUSTOMER (AS DEFINED BY AUSTIN WATER) WOULD BE IMPACTED BY THE SHUT OUT OR C) THE EXISTING WATER LINE WARRANTS IT.

9. WATER LINE TESTING AND STERILIZATION SHALL BE PERFORMED IN ACCORDANCE WITH CITY STANDARD SPECIFICATION ITEMS 510.3 (27)-(29). FORCE MAIN PRESSURE TESTING SHALL BE CONDUCTED AND FALL UNDER THE SPECIFICATIONS AS WATER LINES (PRESSURE PIPE) OR AT THE PRESSURES SHOWN ON THE APPROVED PLANS.

10. ALL MATERIAL USED ON THIS PROJECT MUST BE LISTED ON THE STANDARD PRODUCTS LISTING. ANY MATERIAL NOT LISTED HAS TO GO THROUGH THE REVIEW OF THE STANDARDS COMMITTEE FOR REVIEW AND APPROVAL PRIOR TO START OF PROJECT. TESTING AND EVALUATION OF PRODUCTS ARE REQUIRED BEFORE APPROVAL WILL BE GIVEN ANY CONSIDERATION.

11. WHEN WATER SERVICES ARE DAMAGED AND THE SERVICE MATERIAL IS POLYETHYLENE (PE), THE LINE SHALL BE REPAIRED ONLY BY HEAT FUSION WELD, AT BRASS FITTINGS, OR THE FULL LENGTH SHALL BE REPLACED PER CURRENT STANDARD DETAIL(S). WHEN POLYBUTYLENE (PB) TUBING IS DAMAGED OR TAMPERED WITH IN ANY WAY, THE FULL LENGTH OF SERVICE LINE SHALL BE REPLACED. (NOTE: FULL LENGTH IS FROM THE CORPORATION STOP TO THE METER.) REPAIR COUPLINGS ARE NOT ALLOWED FOR ANY WATER OR WASTEWATER SERVICE LINE REPAIR, RECONNECT, OR REPLACEMENT.

12. WHEN AN EXISTING WATERLINE SHUT OUT IS NECESSARY AND POSSIBLE, THE CONTRACTOR SHALL NOTIFY THE CONSTRUCTION INSPECTOR WHO WILL THEN NOTIFY AUSTIN WATER DISPATCH AND THE AFFECTED CUSTOMERS A MINIMUM OF FORTY-EIGHT (48) HOURS IN ADVANCE.

13. THE CONTRACTOR SHALL NOTIFY THE CONSTRUCTION INSPECTOR SO THAT HE CAN NOTIFY THE AUSTIN WATER AT 972-0000 AT A MINIMUM OF 72 HOURS PRIOR TO RELOCATING ANY DOMESTIC OR FIRE DEMAND WATER METERS. THE CONTRACTOR SHALL CAREFULLY REMOVE ALL METERS AND METERS BOXES THAT ARE INDICATED TO BE RELOCATED OR SALVAGED. THE CONTRACTOR SHALL INSTALL THE REMOVED METER OR CITY PROVIDED METER AT THE NEW LOCATION INDICATED ON THE CONSTRUCTION PLANS.

14. THE CONTRACTOR SHALL VERIFY ALL VERTICAL AND HORIZONTAL LOCATIONS OF EXISTING UTILITIES, BELOW GROUND AND OVERHEAD, PRIOR TO STARTING ONSITE UTILITY WORK.

15. ALL WATER, WASTEWATER, AND RECLAIMED MAINS SHALL BE INSTALLED IN ACCORDANCE WITH THE SEPARATION DISTANCES INDICATED ON THE PLANS, PER UTILITY CRITERIA MANUAL AND TCEQ CHAPTERS 210, 217, AND 290.

16. PROJECT-SPECIFIC SHOP DRAWINGS SHALL BE SUBMITTED FOR AW APPROVAL FOR PRE-CAST CIRCULAR VERTICAL MANHOLE SECTIONS LARGER THAN 48" DIAMETER. THE SHOP DRAWINGS SHALL INCLUDE THE FLOWLINE ELEVATION OF ALL CONNECTING PIPES; ELEVATIONS OF TRANSITIONS FROM LARGE DIAMETER SECTIONS TO 48" DIAMETER SECTIONS; TOP OF MANHOLE AND SURROUNDING GROUND ELEVATIONS; AND DETAILS OF SPECIAL CONSTRUCTION CONSIDERATIONS SPECIFIED IN THE CONTRACT DOCUMENTS.

17. WHEN CONCRETE MANHOLES LARGER THAN 48 INCH DIAMETER ARE USED, DRAWINGS THAT ARE SEALED BY A PROFESSIONAL ENGINEER SHALL BE SUBMITTED FOR BASE SLABS, FLAT TOP LIDS (IF USED), AND FLAT TYPE CONCRETE PIECES USED TO TRANSITION FROM LARGER TO SMALLER DIAMETER MANHOLE SECTIONS.

18. ALL FIRE HYDRANTS AND VALVES THAT ARE TO BE ABANDONED SHALL BE REMOVED, SALVAGED AND RETURNED TO AUSTIN WATER. NOTICE SHOULD BE GIVEN 48 HOURS PRIOR, TO PIPELINE OPERATIONS DISTRIBUTION SYSTEM -VALVES AND HYDRANT SERVICES SUPERVISOR AT 512-972-1280.

19. ALL EXISTING WATER METERS IDENTIFIED TO BE RELOCATED OR ABANDONED AT THE DEVELOPMENT SHALL BE REMOVED FROM THE METER BOX PRIOR TO CONSTRUCTION AND GIVEN IMMEDIATELY TO THE CITY OF AUSTIN INSPECTOR.

20. THE ENGINEER SHALL CALL OUT THE SIZE, TYPE AND USE (DOMESTIC OR IRRIGATION) OF ALL EXISTING WATER METERS TO BE RELOCATED OR REPURPOSED. WATER METER NUMBERS WILL NOT BE REQUIRED TO BE PLACED ON THE PLAN SHEET. A SEPARATE AUSTIN WATER TAPS OFFICE FORM WILL BE USED TO PROVIDE RELEVANT DATA FOR THE EXISTING INFORMATION ON EXISTING METERS TO RECEIVE APPROPRIATE CREDITS. THIS FORM SHALL BE DIRECTLY SUBMITTED TO AUSTIN WATER TAPS OFFICE FOR REVIEW AND PROCESSING.

21. NO CONNECTION MAY BE MADE BETWEEN THE PRIVATE PLUMBING AND AUSTIN WATER INFRASTRUCTURE UNTIL A CITY APPROVED WATER METER HAS BEEN INSTALLED.

22. METER BOXES AND CLEAN OUTS SHALL NOT BE LOCATED WITHIN PAVED AREAS SUCH AS DRIVEWAYS AND SIDEWALKS.

THIS CONFORMED DOCUMENT IS RELEASED FOR THE CONVENIENCE OF THE CONTRACTOR UNDER THE AUTHORITY OF:

CASEY G. WAUTERS, P.E.
TX LIC NO. 93889

11-01-22
DATE

SEE DISCLAIMER FOR LIMITATIONS OF USE.

CONTRACT DOCUMENTS DATED JUNE 10, 2022, AS PART OF THE BIDDING DOCUMENTS (DRAWINGS AND SPECIFICATIONS) AND SUBSEQUENTLY ISSUED ADDENDA HAVE BEEN MERGED INTO ONE CONFORMING SET OF DOCUMENTS FOR THE CONVENIENCE OF THE CONTRACTOR. IF INCONSISTENCIES OR AMBIGUITIES BETWEEN "CONFORMED" DOCUMENTS AND CONTRACT DOCUMENTS ARE FOUND, THE CONTRACT DOCUMENTS SHALL GOVERN.

REV	DATE	BY	DESCRIPTION
			CONFORMED DOCUMENTS

DESIGNED CW
DRAWN AW
CHECKED SGE
DATE FEBRUARY 2022

**
ORIGINAL
SEALED BY
CASEY G. WAUTERS, P.E.
2/28/2022
TX PE 93889
**

AECOM TECHNICAL SERVICES INC.
13640 BRIARWICK DRIVE, SUITE 200
AUSTIN, TEXAS 78729
WWW.AECOM.COM
TBPE REG. NO. F-3580

carollo
TBPE No. F-882

CITY OF AUSTIN

CITY OF AUSTIN

WILD HORSE RANCH WWTP EXPANSION

CIVIL

GENERAL CIVIL CONSTRUCTION NOTES (SHEET 2 OF 2)

VERIFY SCALES
BAR IS ONE INCH ON ORIGINAL DRAWING
0 1"
IF NOT ONE INCH ON THIS SHEET, ADJUST SCALES ACCORDINGLY

JOB NO. 10976A.10
DRAWING NO. 00GC03
SHEET NO. 223 OF 464

LAST SAVED BY: dseivert

PROJECT NO. 9585A10 FILE NAME: 9585A10_SheetSeed.dgn

CITY OF AUSTIN - STANDARD NOTES
EROSION AND SEDIMENTATION CONTROL (APPENDIX P-1)

1. THE CONTRACTOR SHALL INSTALL EROSION/SEDIMENTATION CONTROLS, TREE/NATURAL AREA PROTECTIVE FENCING, AND CONDUCT "PRE-CONSTRUCTION" TREE FERTILIZATION (IF APPLICABLE) PRIOR TO ANY SITE PREPARATION WORK (CLEARING, GRUBBING OR EXCAVATION).

2. THE PLACEMENT OF EROSION/SEDIMENTATION CONTROLS SHALL BE IN ACCORDANCE WITH THE ENVIRONMENTAL CRITERIA MANUAL AND THE APPROVED EROSION AND SEDIMENTATION CONTROL PLAN. THE COA ESC PLAN SHALL BE CONSULTED AND USED AS THE BASIS FOR A TPDES REQUIRED SWPPP. IF A SWPPP IS REQUIRED, IT SHALL BE AVAILABLE FOR REVIEW BY THE CITY OF AUSTIN ENVIRONMENTAL INSPECTOR AT ALL TIMES DURING CONSTRUCTION, INCLUDING AT THE PRE-CONSTRUCTION MEETING. THE CHECKLIST BELOW CONTAINS THE BASIC ELEMENTS THAT SHALL BE REVIEWED FOR PERMIT APPROVAL BY COA EV PLAN REVIEWERS AS WELL AS COA EV INSPECTORS.

   - PLAN SHEETS SUBMITTED TO THE CITY OF AUSTIN MUST SHOW THE FOLLOWING:

     DIRECTION OF FLOW DURING GRADING OPERATIONS.

     LOCATION, DESCRIPTION, AND CALCULATIONS FOR OFF-SITE FLOW DIVERSION STRUCTURES.

     AREAS THAT WILL NOT BE DISTURBED; NATURAL FEATURES TO BE PRESERVED.

     DELINEATION OF CONTRIBUTING DRAINAGE AREA TO EACH PROPOSED BMP (E.G., SILT FENCE, SEDIMENT BASIN, ETC.).

     LOCATION AND TYPE OF E&S BMPS FOR EACH PHASE OF DISTURBANCE.

     CALCULATIONS FOR BMPS AS REQUIRED.

     LOCATION AND DESCRIPTION OF TEMPORARY STABILIZATION MEASURES.

     LOCATION OF ON-SITE SPOILS, DESCRIPTION OF HANDLING AND DISPOSAL OF BORROW MATERIALS, AND DESCRIPTION OF ON-SITE PERMANENT SPOILS DISPOSAL AREAS, INCLUDING SIZE, DEPTH OF FILL AND REVEGETATION PROCEDURES.

     DESCRIBE SEQUENCE OF CONSTRUCTION AS IT PERTAINS TO ESC INCLUDING THE FOLLOWING ELEMENTS:

     1. INSTALLATION SEQUENCE OF CONTROLS (E.G. PERIMETER CONTROLS, THEN SEDIMENT BASINS, THEN TEMPORARY STABILIZATION, THEN PERMANENT, ETC.)
     2. PROJECT PHASING IF REQUIRED (LOC GREATER THAN 25 ACRES)
     3. SEQUENCE OF GRADING OPERATIONS AND NOTATION OF TEMPORARY STABILIZATION MEASURES TO BE USED
     4. SCHEDULE FOR CONVERTING TEMPORARY BASINS TO PERMANENT WQ CONTROLS
     5. SCHEDULE FOR REMOVAL OF TEMPORARY CONTROLS
     6. ANTICIPATED MAINTENANCE SCHEDULE FOR TEMPORARY CONTROLS

   - CATEGORIZE EACH BMP UNDER ONE OF THE FOLLOWING AREAS OF BMP ACTIVITY AS DESCRIBED BELOW:

     3.1 MINIMIZE DISTURBED AREA AND PROTECT NATURAL FEATURES AND SOIL
     3.2 CONTROL STORMWATER FLOWING ONTO AND THROUGH THE PROJECT
     3.3 STABILIZE SOILS
     3.4 PROTECT SLOPES
     3.5 PROTECT STORM DRAIN INLETS
     3.6 ESTABLISH PERIMETER CONTROLS AND SEDIMENT BARRIERS
     3.7 RETAIN SEDIMENT ON-SITE AND CONTROL DEWATERING PRACTICES
     3.8 ESTABLISH STABILIZED CONSTRUCTION EXITS
     3.9 ANY ADDITIONAL BMPS

   - NOTE THE LOCATION OF EACH BMP ON YOUR SITE MAP(S).
   - FOR ANY STRUCTURAL BMPS, YOU SHOULD PROVIDE DESIGN SPECIFICATIONS AND DETAILS AND REFER TO THEM.
   - FOR MORE INFORMATION, SEE CITY OF AUSTIN ENVIRONMENTAL CRITERIA MANUAL 1.4.

3. THE PLACEMENT OF TREE/NATURAL AREA PROTECTIVE FENCING SHALL BE IN ACCORDANCE WITH THE CITY OF AUSTIN STANDARD NOTES FOR TREE AND NATURAL AREA PROTECTION AND THE APPROVED GRADING/TREE AND NATURAL AREA PLAN.

4. A PRE-CONSTRUCTION CONFERENCE SHALL BE HELD ON-SITE WITH THE CONTRACTOR, DESIGN ENGINEER/PERMIT APPLICANT AND ENVIRONMENTAL INSPECTOR AFTER INSTALLATION OF THE EROSION/SEDIMENTATION CONTROLS, TREE/NATURAL AREA PROTECTION MEASURES AND "PRE-CONSTRUCTION" TREE FERTILIZATION (IF APPLICABLE) PRIOR TO BEGINNING ANY SITE PREPARATION WORK. THE OWNER OR OWNER'S REPRESENTATIVE SHALL NOTIFY THE DEVELOPMENT SERVICES DEPARTMENT, 512-974-2278 OR BY EMAIL AT ENVIRONMENTAL.INSPECTIONS@AUSTINTEXAS.GOV, AT LEAST THREE DAYS PRIOR TO THE MEETING DATE. COA APPROVED ESC PLAN AND TPDES SWPPP (IF REQUIRED) SHOULD BE REVIEWED BY COA EV INSPECTOR AT THIS TIME.

5. ANY MAJOR VARIATION IN MATERIALS OR LOCATIONS OF CONTROLS OR FENCES FROM THOSE SHOWN ON THE APPROVED PLANS WILL REQUIRE A REVISION AND MUST BE APPROVED BY THE REVIEWING ENGINEER, ENVIRONMENTAL SPECIALIST OR CITY ARBORIST AS APPROPRIATE. MAJOR REVISIONS MUST BE APPROVED BY AUTHORIZED COA STAFF. MINOR CHANGES TO BE MADE AS FIELD REVISIONS TO THE EROSION AND SEDIMENTATION CONTROL PLAN MAY BE REQUIRED BY THE ENVIRONMENTAL INSPECTOR DURING THE COURSE OF CONSTRUCTION TO CORRECT CONTROL INADEQUACIES.

6. THE CONTRACTOR IS REQUIRED TO PROVIDE A CERTIFIED INSPECTOR THAT IS EITHER A LICENSED ENGINEER (OR PERSON DIRECTLY SUPERVISED BY THE LICENSED ENGINEER) OR CERTIFIED PROFESSIONAL IN EROSION AND SEDIMENT CONTROL (CPESC OR CPESC - IT), CERTIFIED EROSION, SEDIMENT AND STORMWATER - INSPECTOR (CESSWI OR CESSWI - IT) OR CERTIFIED INSPECTOR OF SEDIMENTATION AND EROSION CONTROLS (CISEC OR CISEC - IT) CERTIFICATION TO INSPECT THE CONTROLS AND FENCES AT WEEKLY OR BI-WEEKLY INTERVALS AND AFTER ONE-HALF (½) INCH OR GREATER RAINFALL EVENTS TO INSURE THAT THEY ARE FUNCTIONING PROPERLY. THE PERSON(S) RESPONSIBLE FOR MAINTENANCE OF CONTROLS AND FENCES SHALL IMMEDIATELY MAKE ANY NECESSARY REPAIRS TO DAMAGED AREAS. SILT ACCUMULATION AT CONTROLS MUST BE REMOVED WHEN THE DEPTH REACHES SIX (6) INCHES OR ONE-THIRD (1/3) OF THE INSTALLED HEIGHT OF THE CONTROL WHICHEVER IS LESS.

7. PRIOR TO FINAL ACCEPTANCE BY THE CITY, HAUL ROADS AND WATERWAY CROSSINGS CONSTRUCTED FOR TEMPORARY CONTRACTOR ACCESS MUST BE REMOVED, ACCUMULATED SEDIMENT REMOVED FROM THE WATERWAY AND THE AREA RESTORED TO THE ORIGINAL GRADE AND REVEGETATED. ALL LAND CLEARING DEBRIS SHALL BE DISPOSED OF IN APPROVED SPOIL DISPOSAL SITES.

8. ALL WORK MUST STOP IF A VOID IN THE ROCK SUBSTRATE IS DISCOVERED WHICH IS; ONE SQUARE FOOT IN TOTAL AREA; BLOWS AIR FROM WITHIN THE SUBSTRATE AND/OR CONSISTENTLY RECEIVES WATER DURING ANY RAIN EVENT. AT THIS TIME IT IS THE RESPONSIBILITY OF THE PROJECT MANAGER TO IMMEDIATELY CONTACT A CITY OF AUSTIN ENVIRONMENTAL INSPECTOR FOR FURTHER INVESTIGATION. IN ADDITION, IF THE PROJECT SITE IS LOCATED WITHIN THE EDWARDS AQUIFER, THE PROJECT MANAGER MUST NOTIFY THE TRAVIS COUNTY BALCONES CANYONLANDS CONSERVATION PRESERVE (BCCP) BY EMAIL AT BCCP@TRAVISCOUNTYTX.GOV. CONSTRUCTION ACTIVITIES WITHIN 50 FEET OF THE VOID MUST STOP.

9. TEMPORARY AND PERMANENT EROSION CONTROL: ALL DISTURBED AREAS SHALL BE RESTORED AS NOTED BELOW:

   A. ALL DISTURBED AREAS TO BE REVEGETATED ARE REQUIRED TO PLACE A MINIMUM OF SIX (6) INCHES OF TOPSOIL [SEE STANDARD SPECIFICATION ITEM NO. 601S.3(A)]. DO NOT ADD TOPSOIL WITHIN THE CRITICAL ROOT ZONE OF EXISTING TREES.

      * TOPSOIL SALVAGED FROM THE EXISTING SITE IS ENCOURAGED FOR USE, BUT IT SHOULD MEET THE STANDARDS SET FORTH IN 601S.

      AN OWNER/ENGINEER MAY PROPOSE USE OF ONSITE SALVAGED TOPSOIL WHICH DOES NOT MEET THE CRITERIA OF STANDARD SPECIFICATION 601S BY PROVIDING A SOIL ANALYSIS AND A WRITTEN STATEMENT FROM A QUALIFIED PROFESSIONAL IN SOILS, LANDSCAPE ARCHITECTURE, OR AGRONOMY INDICATING THE ONSITE TOPSOIL WILL PROVIDE AN EQUIVALENT GROWTH MEDIA AND SPECIFYING WHAT, IF ANY, SOIL AMENDMENTS ARE REQUIRED.

      * SOIL AMENDMENTS SHALL BE WORKED INTO THE EXISTING ONSITE TOPSOIL WITH A DISC OR TILLER TO CREATE A WELL-BLENDED MATERIAL.

THE VEGETATIVE STABILIZATION OF AREAS DISTURBED BY CONSTRUCTION SHALL BE AS FOLLOWS:

TEMPORARY VEGETATIVE STABILIZATION:

1. FROM SEPTEMBER 15 TO MARCH 1, SEEDING SHALL BE WITH OR INCLUDE A COOL SEASON COVER CROP; (WESTERN WHEATGRASS (*PASCOPYRUM SMITHII*) AT 5.6 POUNDS PER ACRE, OATS (*AVENA SATIVA*) AT 4.0 POUNDS PER ACRE, CEREAL RYE GRAIN (*SECALE CEREALE*) AT 45 POUNDS PER ACRE. CONTRACTOR MUST ENSURE THAT ANY SEED APPLICATION REQUIRING A COOL SEASON COVER CROP DOES NOT UTILIZE ANNUAL RYEGRASS (*LOLIUM MULTIFLORUM*) OR PERENNIAL RYEGRASS (*LOLIUM PERENNE*). COOL SEASON COVER CROPS ARE NOT PERMANENT EROSION CONTROL.
2. FROM MARCH 2 TO SEPTEMBER 14, SEEDING SHALL BE WITH HULLED BERMUDA AT A RATE OF 45 POUNDS PER ACRE OR A NATIVE PLANT SEED MIX CONFORMING TO ITEM 604S OR 609S.
   A. FERTILIZER SHALL BE APPLIED ONLY IF WARRANTED BY A SOIL TEST AND SHALL CONFORM TO ITEM NO. 606S, FERTILIZER. FERTILIZATION SHOULD NOT OCCUR WHEN RAINFALL IS EXPECTED OR DURING SLOW PLANT GROWTH OR DORMANCY. CHEMICAL FERTILIZER MAY NOT BE APPLIED IN THE CRITICAL WATER QUALITY ZONE.
   B. HYDROMULCH SHALL COMPLY WITH TABLE 1, BELOW.
   C. TEMPORARY EROSION CONTROL SHALL BE ACCEPTABLE WHEN THE GRASS HAS GROWN AT LEAST 1½ INCHES HIGH WITH A MINIMUM OF 95% TOTAL COVERAGE SO THAT ALL AREAS OF A SITE THAT RELY ON VEGETATION FOR TEMPORARY STABILIZATION ARE UNIFORMLY VEGETATED, AND PROVIDED THERE ARE NO BARE SPOTS LARGER THAN 10 SQUARE FEET.
   D. WHEN REQUIRED, NATIVE PLANT SEEDING SHALL COMPLY WITH REQUIREMENTS OF THE CITY OF AUSTIN ENVIRONMENTAL CRITERIA MANUAL, AND STANDARD SPECIFICATION 604S OR 609S.

TABLE 1: HYDROMULCHING FOR TEMPORARY VEGETATIVE STABILIZATION

MATERIAL	DESCRIPTION	LONGEVITY	TYPICAL APPLICATIONS	APPLICATION RATES
100% OR ANY BLEND OF WOOD, CELLULOSE, STRAW, AND/OR COTTON PLANT MATERIAL (EXCEPT NO MULCH SHALL EXCEED 30% PAPER)	70% OR GREATER WOOD/STRAW 30% OR LESS PAPER OR NATURAL FIBERS	0-3 MONTHS	MODERATE SLOPES; FROM FLAT TO 3:1	1,500 TO 2,000 LBS PER ACRE

PERMANENT VEGETATIVE STABILIZATION:

1. FROM SEPTEMBER 15 TO MARCH 1, SEEDING IS CONSIDERED TO BE TEMPORARY STABILIZATION ONLY. IF COOL SEASON COVER CROPS EXIST WHERE PERMANENT VEGETATIVE STABILIZATION IS DESIRED, THE GRASSES SHALL BE MOWED TO A HEIGHT OF LESS THAN ONE-HALF (½) INCH AND THE AREA SHALL BE RE-SEEDED IN ACCORDANCE WITH TABLE 2 BELOW. ALTERNATIVELY, THE COOL SEASON COVER CROP CAN BE MIXED WITH BERMUDAGRASS OR NATIVE SEED AND INSTALLED TOGETHER, UNDERSTANDING THAT GERMINATION OF WARM-SEASON SEED TYPICALLY REQUIRES SOIL TEMPERATURES OF 60 TO 70 DEGREES.
2. FROM MARCH 2 TO SEPTEMBER 14, SEEDING SHALL BE WITH HULLED BERMUDA AT A RATE OF 45 POUNDS PER ACRE WITH A PURITY OF 95% AND A MINIMUM PURE LIVE SEED (PLS) OF 0.83. BERMUDA GRASS IS A WARM SEASON GRASS AND IS CONSIDERED PERMANENT EROSION CONTROL. PERMANENT VEGETATIVE STABILIZATION CAN ALSO BE ACCOMPLISHED WITH A NATIVE PLANT SEED MIX CONFORMING TO ITEM 604S OR 609S.
   A. FERTILIZER USE SHALL FOLLOW THE RECOMMENDATION OF A SOIL TEST. SEE ITEM 606S, FERTILIZER. APPLICATIONS OF FERTILIZER (AND PESTICIDE) ON CITY-OWNED AND MANAGED PROPERTY REQUIRES THE YEARLY SUBMITTAL OF A PESTICIDE AND FERTILIZER APPLICATION RECORD, ALONG WITH A CURRENT COPY OF THE APPLICATOR'S LICENSE. FOR CURRENT COPY OF THE RECORD TEMPLATE CONTACT THE CITY OF AUSTIN'S IPM COORDINATOR.
   B. HYDROMULCH SHALL COMPLY WITH TABLE 2, BELOW.
   C. WATER THE SEEDED AREAS IMMEDIATELY AFTER INSTALLATION TO ACHIEVE GERMINATION AND A HEALTHY STAND OF PLANTS THAT CAN ULTIMATELY SURVIVE WITHOUT SUPPLEMENTAL WATER. APPLY THE WATER UNIFORMLY TO THE PLANTED AREAS WITHOUT CAUSING DISPLACEMENT OR EROSION OF THE MATERIALS OR SOIL. MAINTAIN THE SEEDBED IN A MOIST CONDITION FAVORABLE FOR PLANT GROWTH. ALL WATERING SHALL COMPLY WITH CITY CODE CHAPTER 6-4 (WATER CONSERVATION), AT RATES AND FREQUENCIES DETERMINED BY A LICENSED IRRIGATOR OR OTHER QUALIFIED PROFESSIONAL, AND AS ALLOWED BY THE AUSTIN WATER UTILITY AND CURRENT WATER RESTRICTIONS AND WATER CONSERVATION INITIATIVES.
   D. PERMANENT EROSION CONTROL SHALL BE ACCEPTABLE WHEN THE GRASS HAS GROWN AT LEAST 1½ INCHES HIGH WITH A MINIMUM OF 95 PERCENT FOR THE NON-NATIVE MIX, AND 95 PERCENT COVERAGE FOR THE NATIVE MIX SO THAT ALL AREAS OF A SITE THAT RELY ON VEGETATION FOR STABILITY MUST BE UNIFORMLY VEGETATED, AND PROVIDED THERE ARE NO BARE SPOTS LARGER THAN 10 SQUARE FEET.
   E. WHEN REQUIRED, NATIVE PLANT SEEDING SHALL COMPLY WITH REQUIREMENTS OF THE CITY OF AUSTIN ENVIRONMENTAL CRITERIA MANUAL, ITEMS 604S AND 609S.

TABLE 2: HYDROMULCHING FOR PERMANENT VEGETATIVE STABILIZATION

MATERIAL	DESCRIPTION	LONGEVITY	TYPICAL APPLICATIONS	APPLICATION RATES
BONDED FIBER MATRIX (BFM)	80% ORGANIC DEFIBRATED FIBERS			
10% TACKIFIER	6 MONTHS	ON SLOPES UP TO 2:1 AND EROSIVE SOIL CONDITIONS	2,500 TO 4,000 LBS PER ACRE (SEE MANUFACTURERS RECOMMENDATIONS)	
FIBER REINFORCED MATRIX (FRM)	65% ORGANIC DEFIBRATED FIBERS 25% REINFORCING FIBERS OR LESS 10% TACKIFIER	UP TO 12 MONTHS	ON SLOPES UP TO 1:1 AND EROSIVE SOIL CONDITIONS	3,000 TO 4,500 LBS PER ACRE (SEE MANUFACTURERS RECOMMENDATIONS)

10. DEVELOPER INFORMATION:
    OWNER:
    COMPANY: CITY OF AUSTIN
    CONTACT: JOANETTE AIRD
    ADDRESS: 625 E. 10TH ST., AUSTIN, TX 78701
    PHONE: 512-972-0185
    E-MAIL: JOANETTE.AIRD@AUSTINTEXAS.GOV
    OWNER'S REPRESENTATIVE RESPONSIBLE FOR PLAN ALTERATIONS:
    COMPANY: CAROLLO ENGINEERS, INC.
    CONTACT: DANNY HURTADO, P.E.
    ADDRESS: 8911 CAPITAL OF TEXAS HWY NORTH, SUITE 220
    PHONE: 512-453-5383
    E-MAIL: DHURTADO@CAROLLO.COM
    PARTY RESPONSIBLE FOR EROSION/SEDIMENTATION CONTROL MAINTENANCE:
    COMPANY: CONTRACTOR
    PARTY RESPONSIBLE FOR TREE/NATURAL AREA PROTECTION MAINTENANCE:
    COMPANY: CONTRACTOR
11. THE CONTRACTOR SHALL NOT DISPOSE OF SURPLUS EXCAVATED MATERIAL FROM THE SITE WITHOUT NOTIFYING THE DEVELOPMENT SERVICES DEPARTMENT AT 512-974-2278 AT LEAST 48 HOURS PRIOR WITH THE LOCATION AND A COPY OF THE PERMIT ISSUED TO RECEIVE THE MATERIAL.

THIS CONFORMED DOCUMENT IS RELEASED FOR THE CONVENIENCE OF THE CONTRACTOR UNDER THE AUTHORITY OF:

CASEY G. WAUTERS, P.E. 11-01-22
TX LIC NO. 93889 DATE

SEE DISCLAIMER FOR LIMITATIONS OF USE.

CONTRACT DOCUMENTS DATED JUNE 10, 2022, AS PART OF THE BIDDING DOCUMENTS (DRAWINGS AND SPECIFICATIONS) AND SUBSEQUENTLY ISSUED ADDENDA HAVE BEEN MERGED INTO ONE CONFORMING SET OF DOCUMENTS FOR THE CONVENIENCE OF THE CONTRACTOR. IF INCONSISTENCIES OR AMBIGUITIES BETWEEN "CONFORMED" DOCUMENTS AND CONTRACT DOCUMENTS ARE FOUND, THE CONTRACT DOCUMENTS SHALL GOVERN.

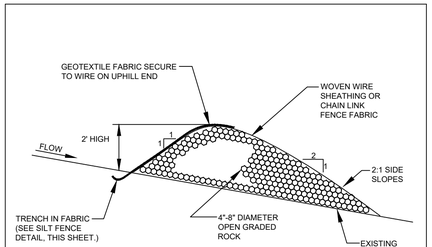

NOTES:

1. USE ONLY OPEN GRADED ROCK, 4-8 INCH DIAMETER, FOR STREAM FLOW CONDITION. USE OPEN GRADED ROCK, 3-5 INCH DIAMETER, FOR OTHER CONDITIONS.
2. ROCK BERM SHALL BE SECURED WITH A WOVEN WIRE SHEATHING HAVING MAXIMUM 1 INCH OPENING AND MINIMUM WIRE DIAMETER OF 20 GAUGE.
3. ROCK BERM SHALL BE INSPECTED WEEKLY OR AFTER EACH RAIN, AND THE STONE AND/OR FABRIC CORE-WOVEN WIRE SHEATHING SHALL BE REPLACED WHEN THE STRUCTURE CEASES TO FUNCTION AS INTENDED, DUE TO SILT ACCUMULATION AMONG THE ROCKS, WASHOUT, CONSTRUCTION TRAFFIC DAMAGE, ETC.
4. WHEN SILT REACHES A DEPTH EQUAL TO ONE-THIRD THE HEIGHT OF THE BERM OR ONE FOOT, WHICHEVER IS LESS, THE SILT SHALL BE REMOVED AND DISPOSED OF IN AN APPROVED SITE AND IN A MANNER AS TO NOT CREATE A SILTATION PROBLEM.
5. DAILY INSPECTION SHALL BE MADE ON SEVERE SERVICE ROCK BERMS; SILT SHALL BE REMOVED WHEN ACCUMULATION REACHES 6 INCHES.
6. WHEN SITE IS COMPLETELY STABILIZED, THE BERM AND ACCUMULATED SILT SHALL BE REMOVED AND DISPOSED OF IN AN APPROVED MANNER.

FABRIC COVERED (SEVERE SERVICE) ROCK BERM

CITY OF AUSTIN		
GENERAL PERMIT PROGRAM	ADOPTED:	STANDARD NO.
APPROVED	SCALE: N.T.S.	N/A
	INITIAL:	

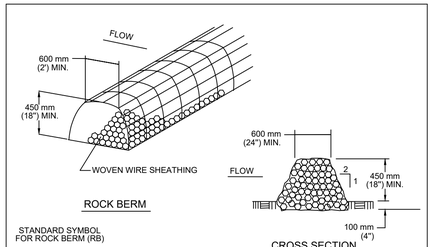

NOTES:

1. USE ONLY OPEN GRADED ROCK 75 to 125 mm (3 to 5") DIAMETER FOR ALL CONDITIONS.
2. THE ROCK BERM SHALL BE SECURED WITH A WOVEN WIRE SHEATHING HAVING MAXIMUM 25 mm (1") OPENING AND MINIMUM WIRE DIAMETER OF 12.9 mm (20 GAUGE).
3. THE ROCK BERM SHALL BE INSPECTED DAILY OR AFTER EACH RAIN, AND THE STONE AND/OR FABRIC CORE-WOVEN SHEATHING SHALL BE REPLACED WHEN THE STRUCTURE CEASES TO FUNCTION AS INTENDED, DUE TO SEDIMENT ACCUMULATION AMONG THE ROCKS, WASHOUT, CONSTRUCTION TRAFFIC DAMAGE, ETC.
4. IF SEDIMENT REACHES A DEPTH EQUAL TO ONE-THIRD THE HEIGHT OF THE BERM OR 150 mm (6"), WHICHEVER IS LESS, THE SEDIMENT SHALL BE REMOVED AND DISPOSED OF ON AN APPROVED SITE AND IN A MANNER THAT WILL NOT CREATE A SEDIMENTATION PROBLEM.
5. WHEN THE SITE IS COMPLETELY STABILIZED,THE BERM AND ACCUMULATED SEDIMENT SHALL BE REMOVED AND DISPOSED OF IN AN APPROVED MANNER.

CITY OF AUSTIN WATERSHED PROTECTION DEPARTMENT	ROCK BERM	
RECORD COPY SIGNED BY MORGAN BYARS 8/24/2010 ADOPTED	THE ARCHITECT/ENGINEER ASSUMES RESPONSIBILITY FOR APPROPRIATE USE OF THIS STANDARD.	STANDARD NO. 639S-1

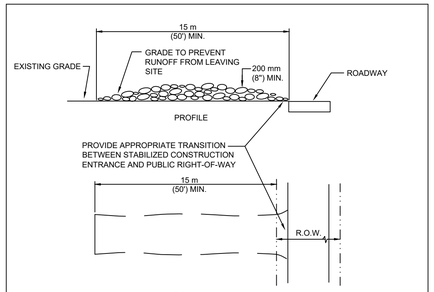

NOTES:

1. STONE SIZE: 75-125 mm (3-5") OPEN GRADED ROCK.
2. LENGTH: AS EFFECTIVE BUT NOT LESS THAN 15 m (50').
3. THICKNESS: NOT LESS THAN 200 mm (8").

SWALE TO PREVENT RUNOFF FROM LEAVING THE CONSTRUCTION SITE.

CITY OF AUSTIN WATERSHED PROTECTION DEPARTMENT	STABILIZED CONSTRUCTION ENTRANCE	
RECORD COPY SIGNED BY J. PATRICK MURPHY 5/23/00 ADOPTED	THE ARCHITECT/ENGINEER ASSUMES RESPONSIBILITY FOR APPROPRIATE USE OF THIS STANDARD.	STANDARD NO. 641S-1

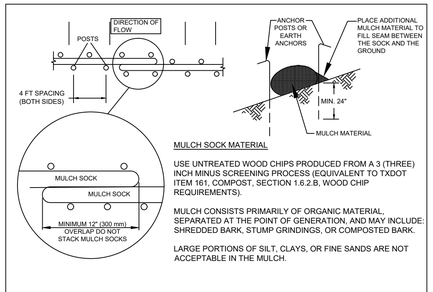

MULCH SOCK MATERIAL

USE UNTREATED WOOD CHIPS PRODUCED FROM A 3 (THREE) INCH MINUS SCREENING PROCESS (EQUIVALENT TO TXDOT ITEM 161, COMPOST, SECTION 1.6.2.B, WOOD CHIP REQUIREMENTS).

MULCH CONSISTS PRIMARILY OF ORGANIC MATERIAL, SEPARATED AT THE POINT OF GENERATION, AND MAY INCLUDE: SHREDDED BARK, STUMP GRINDINGS, OR COMPOSTED BARK.

LARGE PORTIONS OF SILT, CLAYS, OR FINE SANDS ARE NOT ACCEPTABLE IN THE MULCH.

NOTES:

1. STEEL OR WOOD POSTS WHICH SUPPORT THE MULCH SOCK SHALL BE INSTALLED ON A SLIGHT ANGLE TOWARD THE ANTICIPATED RUNOFF SOURCE. POST MUST BE EMBEDDED A MINIMUM OF 600mm (24 inches). IF WOOD POSTS CANNOT ACHIEVE 600mm (24 inches) DEPTH, USE STEEL POSTS. EARTH ANCHORS ARE ALSO ACCEPTABLE.
2. THE TOE OF THE MULCH SOCK SHALL BE PLACED SO THAT THE MULCH SOCK IS FLAT AND PERPENDICULAR TO THE LINE OF FLOW. IN ORDER TO PREVENT WATER FROM FLOWING BETWEEN THE JOINTS OF ADJACENT ENDS OF MULCH SOCKS, LAP THE ENDS OF ADJACENT MULCH SOCKS A MINIMUM OF 300mm (12 inches).
3. MULCH MATERIAL MUST BE FREE OF REFUSE, PHYSICAL CONTAMINANTS, AND MATERIAL TOXIC TO PLANT GROWTH; IT IS NOT ACCEPTABLE FOR THE MULCH MATERIAL TO CONTAIN GROUND CONSTRUCTION DEBRIS, BIOSOLIDS, OR MANURE.
4. SOCK MATERIAL WILL BE 100% BIODEGRADABLE, PHOTODEGRADABLE, OR RECYCLABLE SUCH AS BURLAP, TWINE, UV PHOTOBIODEGRADABLE PLASTIC, POLYESTER, OR ANY OTHER ACCEPTABLE MATERIAL.
5. MULCH SOCKS SHOULD BE USED AT THE BASE OF SLOPES NO STEEPER THAN 2:1 AND SHOULD NOT EXCEED THE MAXIMUM SPACING CRITERIA PROVIDED IN CITY OF AUSTIN ENVIRONMENTAL CRITERIA MANUAL TABLE 1.4.5.F.1 FOR A GIVEN SLOPE CATEGORY.
6. ACCUMULATED SILT SHALL BE REMOVED WHEN IT REACHES A DEPTH OF 150mm (6 inches). THE SILT SHALL BE DISPOSED OF ON AN APPROVED SITE AND IN SUCH A MANNER THAT WILL NOT CONTRIBUTE TO ADDITIONAL SILTATION.

CITY OF AUSTIN WATERSHED PROTECTION DEPARTMENT	MULCH SOCK	
RECORD COPY SIGNED BY MORGAN BYARS 08/24/2010 ADOPTED	THE ARCHITECT/ENGINEER ASSUMES RESPONSIBILITY FOR APPROPRIATE USE OF THIS STANDARD.	STANDARD NO. 648S-1

REV	DATE	BY	DESCRIPTION
			CONFORMED DOCUMENTS

DESIGNED AW
DRAWN AW
CHECKED SGE
DATE FEBRUARY 2022

** ORIGINAL SEALED BY CASEY G. WAUTERS, P.E. 2/28/2022 TX PE 93889 **

AECOM TECHNICAL SERVICES INC.
13640 BRIARWICK DRIVE, SUITE 200
AUSTIN, TEXAS 78729
WWW.AECOM.COM
TBPE REG. NO. F-3580

TBPE No. F-882

CITY OF AUSTIN
WILD HORSE RANCH WWTP EXPANSION
CIVIL
EROSION SEDIMENTATION CONTROL DETAILS AND NOTES (SHEET 1 OF 2)

VERIFY SCALES
BAR IS ONE INCH ON ORIGINAL DRAWING
0 1"
IF NOT ONE INCH ON THIS SHEET, ADJUST SCALES ACCORDINGLY

JOB NO. 10976A.10
DRAWING NO. 00GC04
SHEET NO. 224 OF 464

LAST SAVED BY: dseivert

PROJECT NO. 9585A10 FILE NAME: 9585A10_SheetSeed.dgn

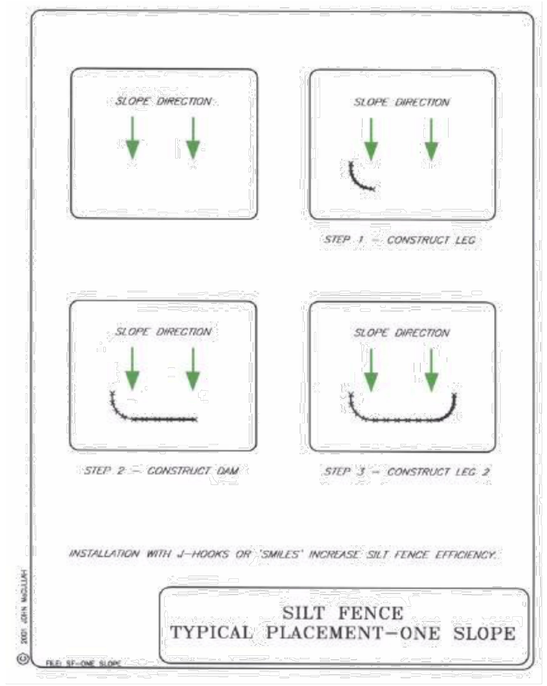

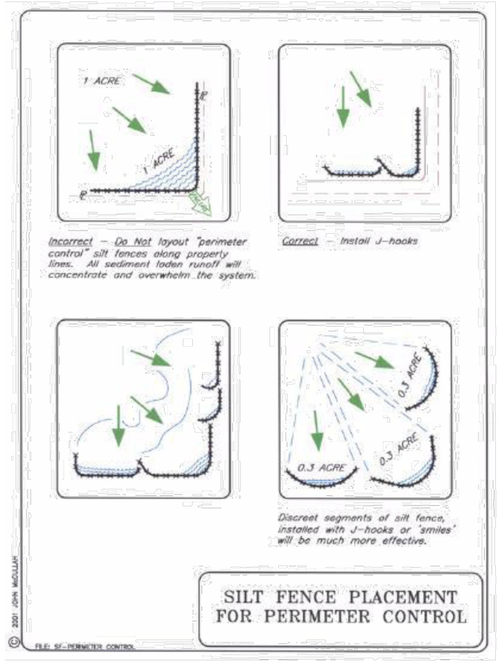

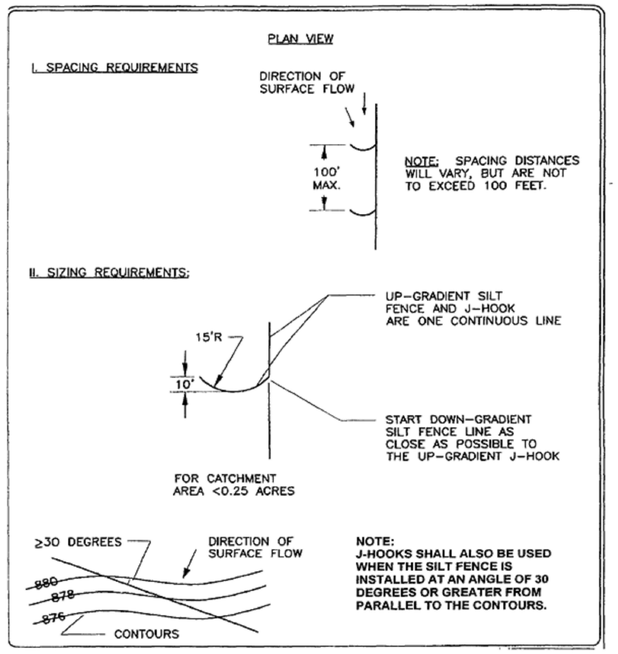

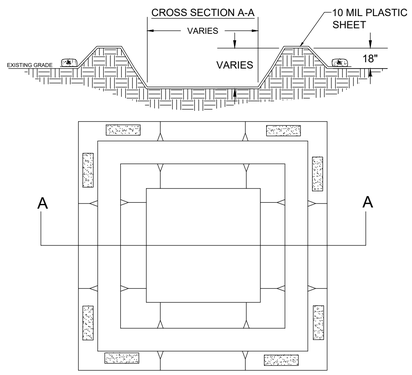

NOTES:
1. SET LENGTH AND WIDTH AS NECESSARY TO PROVIDE ADEQUATE SPACE FOR WASHOUT ACTIVITIES.
2. IF RESTRICTED BY DEPTH DUE TO BELOW GRADE APPURTENANCES, PLACE EARTHEN BERMS AT GRADE.
3. USE EXCAVATED MATERIAL TO CREATE EARTHEN BERMS SURROUNDING THE AREA TO BE DESIGNATED AS A CONCRETE WASHOUT.
4. PLACE 10MIL OR GREATER PLASTIC SHEETING.
5. SECURE SHEETING ON OUTSIDE OF BERM AREA USING SAND BAGS OR ROCK EQUIVALENT.

CONCRETE WASHOUT

SCALE: NTS

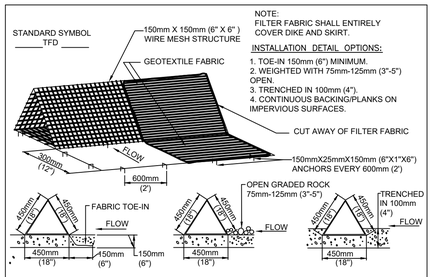

NOTE:
FILTER FABRIC SHALL ENTIRELY COVER DIKE AND SKIRT.

INSTALLATION DETAIL OPTIONS:

1. TOE-IN 150mm (6") MINIMUM.
2. WEIGHTED WITH 75mm-125mm (3"-5") OPEN
3. TRENCHED IN 100mm (4").
4. CONTINUOUS BACKING/PLANKS ON IMPERVIOUS SURFACES.

GENERAL NOTES:

1. DIKES SHALL BE PLACED IN A ROW WITH ENDS TIGHTLY ABUTTING THE ADJACENT DIKE.

2. THE FABRIC COVER AND SKIRT SHALL BE A CONTINUOUS WRAPPING OF GEOTEXTILE. THE SKIRT SHALL BE A CONTINUOUS EXTENSION OF THE FABRIC ON THE UPSTREAM FACE.

3. THE SKIRT SHALL BE WEIGHTED WITH A CONTINUOUS LAYER OF 75-125mm (3-5") OPEN GRADED ROCK OR TOED-IN 150mm (6") WITH MECHANICALLY COMPACTED MATERIAL. OTHERWISE, THE ENTIRE STRUCTURE SHALL BE TRENCHED IN 100mm (4").

4. DIKES AND SKIRT SHALL BE SECURELY ANCHORED IN PLACE USING 150mm (6") WIRE STAPLES ON 600mm (2') CENTERS ON BOTH EDGES AND SKIRT, OR STAKE USING 10M (3/8 ") DIAMETER RE-BAR WITH TEE ENDS.

5. FILTER MATERIAL SHALL BE LAPPED OVER ENDS 150mm (6") TO COVER DIKE TO DIKE JOINTS. JOINTS SHALL BE FASTENED WITH GALVANIZED SHOAT RINGS.

6. THE DIKE STRUCTURE SHALL BE MW40-150mmX150mm (6 GA. 6"X6") WIRE MESH, 450mm (18") ON A SIDE.

7. INSPECTION SHALL BE MADE WEEKLY OR AFTER EACH RAINFALL EVENT AND REPAIR OR REPLACEMENT SHALL BE MADE PROMPTLY AS NEEDED BY THE CONTRACTOR.

8. ACCUMULATED SILT SHALL BE REMOVED WHEN IT REACHES A DEPTH OF 150mm (6") AND DISPOSED OF IN A MANNER WHICH WILL NOT CAUSE ADDITIONAL SILTATION.

9. AFTER THE DEVELOPMENT SITE IS COMPLETELY STABILIZED, THE DIKES AND ANY REMAINING SILT SHALL BE REMOVED. SILT SHALL BE DISPOSED OF AS INDICATED IN GENERAL NOTE 8 ABOVE.

CITY OF AUSTIN WATERSHED PROTECTION DEPARTMENT	TRIANGULAR SEDIMENT FILTER DIKE	
RECORD COPY SIGNED BY J. PATRICK MURPHY 3/27/00 ADOPTED	THE ARCHITECT/ENGINEER ASSUMES RESPONSIBILITY FOR APPROPRIATE USE OF THIS STANDARD.	STANDARD NO. 628S

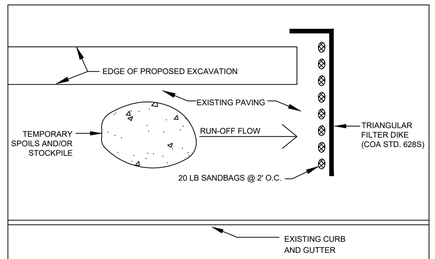

NOTES:

1. THE TEMPORARY SPOILS/STOCKPILE STORAGE AREA AND STAGING AREA MAY BE LOCATED DIRECTLY ADJACENT TO THE EXCAVATION AND ON THE PAVEMENT.

2. ANY SPOIL NOT INTENDED TO BE REUSED WILL BE HAULED TO AN APPROVED OR PERMITTED DISPOSAL SITE DAILY.

3. INSTALL TRIANGULAR SEDIMENT FILTER DIKE (DETAIL 682S) ACROSS FULL WIDTH OF TRAFFIC CLOSURE AND DOWNSTREAM OF CONSTRUCTION AREA, PERPENDICULAR TO CURB AND PLACED TO EFFECTIVELY CATCH AND CONTAIN SEDIMENT LADEN RUNOFF FROM THE EXCAVATED AREA. FILTER DIKE TO FOLLOW ACTIVE CONSTRUCTION. REMOVING AND RE-SETTING FILTER DIKE IS CONSIDERED SUBSIDIARY TO BARRICADES AND TRAFFIC HANDLING.

ADDITIONAL EROSION/SEDIMENTATION CONTROL FOR WORK IN PAVED AREAS

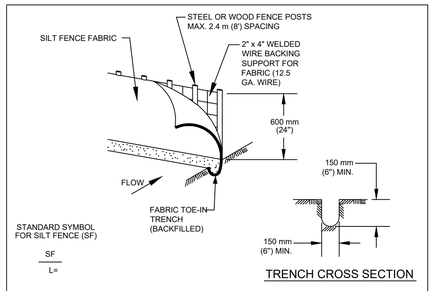

1. STEEL OR WOOD POSTS WHICH SUPPORT THE SILT FENCE SHALL BE INSTALLED ON A SLIGHT ANGLE TOWARD THE ANTICIPATED RUNOFF SOURCE. POST MUST BE EMBEDDED A MINIMUM OF 300 mm (12 INCHES). IF WOOD POSTS CANNOT ACHIEVE 300 mm (12 inches) DEPTH, USE STEEL POSTS.

2. THE TOE OF THE SILT FENCE SHALL BE TRENCHED IN WITH A SPADE OR MECHANICAL TRENCHER, SO THAT THE DOWN SLOPE FACE OF THE TRENCH IS FLAT AND PERPENDICULAR TO THE LINE OF FLOW.

3. THE TRENCH MUST BE A MINIMUM OF 150 mm (6 inches) DEEP AND 150 mm (6 inches) WIDE TO ALLOW FOR THE SILT FENCE FABRIC TO BE LAID IN THE GROUND AND BACKFILLED WITH COMPACTED MATERIAL.

4. SILT FENCE FABRIC SHOULD BE SECURELY FASTENED TO EACH STEEL OR WOOD SUPPORT POST OR TO WOVEN WIRE , WHICH IS IN TURN ATTACHED TO THE STEEL OR WOOD FENCE POST.

5. INSPECTION SHALL BE MADE WEEKLY OR AFTER EACH RAINFALL EVENT AND REPAIR OR REPLACEMENT SHALL BE MADE PROMPTLY AS NEEDED.

6. SILT FENCE SHALL BE REMOVED WHEN THE SITE IS COMPLETELY STABILIZED SO AS NOT TO BLOCK OR IMPEDE STORM FLOW OR DRAINAGE.

7. ACCUMULATED SILT SHALL BE REMOVED WHEN IT REACHES A DEPTH OF 150 mm (6 inches). THE SILT SHALL BE DISPOSED OF ON AN APPROVED SITE AND IN SUCH A MANNER THAT WILL NOT CONTRIBUTE TO ADDITIONAL SILTATION.

CITY OF AUSTIN WATERSHED PROTECTION DEPARTMENT	SILT FENCE	
RECORD COPY SIGNED BY MORGAN BYARS *09/01/2011* ADOPTED	THE ARCHITECT/ENGINEER ASSUMES RESPONSIBILITY FOR APPROPRIATE USE OF THIS STANDARD.	STANDARD NO. 642S-1

THIS CONFORMED DOCUMENT IS RELEASED FOR THE CONVENIENCE OF THE CONTRACTOR UNDER THE AUTHORITY OF:

CASEY G. WAUTERS, P.E. 11-01-22
TX LIC NO. 93889 DATE

SEE DISCLAIMER FOR LIMITATIONS OF USE.

CONTRACT DOCUMENTS DATED JUNE 10, 2022, AS PART OF THE BIDDING DOCUMENTS (DRAWINGS AND SPECIFICATIONS) AND SUBSEQUENTLY ISSUED ADDENDA HAVE BEEN MERGED INTO ONE CONFORMING SET OF DOCUMENTS FOR THE CONVENIENCE OF THE CONTRACTOR. IF INCONSISTENCIES OR AMBIGUITIES BETWEEN "CONFORMED" DOCUMENTS AND CONTRACT DOCUMENTS ARE FOUND, THE CONTRACT DOCUMENTS SHALL GOVERN.

REV	DATE	BY	DESCRIPTION
			CONFORMED DOCUMENTS

DESIGNED AW
DRAWN AW
CHECKED SGE
DATE FEBRUARY 2022

**
ORIGINAL
SEALED BY
CASEY G. WAUTERS, P.E.
2/28/2022
TX PE 93889
**

AECOM TECHNICAL SERVICES INC.
13640 BRIARWICK DRIVE, SUITE 200
AUSTIN, TEXAS 78729
WWW.AECOM.COM
TBPE REG. NO. F-3580

carollo
TBPE No. F-882

CITY OF AUSTIN
FOUNDED 1839

CITY OF AUSTIN

CITY OF AUSTIN
WILD HORSE RANCH WWTP EXPANSION
CIVIL
EROSION SEDIMENTATION CONTROL DETAILS AND NOTES (SHEET 2 OF 2)

VERIFY SCALES
BAR IS ONE INCH ON ORIGINAL DRAWING
0 1"
IF NOT ONE INCH ON THIS SHEET, ADJUST SCALES ACCORDINGLY

JOB NO. 10976A.10
DRAWING NO. 00GC05
SHEET NO. 225 OF 464

LAST SAVED BY: dseivert

PROJECT NO. 9585A10 FILE NAME: 9585A10_SheetSeed.dgn

STANDARD ENVIRONMENTAL NOTES

ADDITIONAL AREAS:

1. ANY ADDITIONAL AREAS REQUIRED FOR CONSTRUCTION OF THIS PROJECT SHALL BE THE SOLE RESPONSIBILITY OF THE CONTRACTOR. CONTRACTOR MUST SECURE CITY OF AUSTIN APPROVAL OF PROPOSED ADDITIONAL AREAS PRIOR TO USE.
2. ALL ASSOCIATED PERMITS AND FEES SHALL BE THE SOLE RESPONSIBILITY OF THE CONTRACTOR.
3. CONTRACTOR MUST INSTALL AND MAINTAIN EROSION/SEDIMENTATION CONTROLS AND TREE PROTECTION FOR ALL SUCH AREAS IN ACCORDANCE WITH THE CITY OF AUSTIN ENVIRONMENTAL CRITERIA MANUAL AND AS INCLUDED IN THE APPROVED SUBMITTAL.

DEWATERING:

CONTRACTOR IS RESPONSIBLE FOR DEWATERING OF WORK AREA. CONTRACTOR MUST SECURE CITY OF AUSTIN APPROVAL OF PROPOSED DEWATERING PROCEDURES PRIOR TO INSTALLATION OR USE.

FUEL STORAGE:

FUEL STORAGE IS PROHIBITED ON THIS PROJECT. ADDITIONALLY, THE CONTRACTOR IS REQUIRED TO NOTIFY THE OWNER IMMEDIATELY FOLLOWING ANY SPILL OF FUEL OR OTHER TOXIC MATERIAL. CONTRACTOR IS REQUIRED TO FOLLOW-UP WITH WRITTEN DOCUMENTATION, INCLUDING A COMPLETE DESCRIPTION OF THE INCIDENT, MATERIAL SPILLED, AND ACTIONS TAKEN TO CONTAIN AND CLEAN-UP MATERIAL.

FUGITIVE DUST CONTROL:

ALL PROJECTS MUST COMPLY WITH THE CODE OF THE CITY OF AUSTIN AND THE ENVIRONMENTAL CRITERIA MANUAL REQUIREMENTS TO CONTROL AIRBORNE DUST. COMPLIANCE IS REQUIRED FOR ENTIRE PROJECT SITE AS WELL AS ASSOCIATED OPERATIONS.

SPOILS STORAGE:

NO SPOILS STORAGE IS ALLOWED WITHIN A CRITICAL WATER QUALITY ZONE, A 100-YEAR FLOODPLAIN, OR ON A SLOPE WITH A GRADIENT OF MORE THAN 15 PERCENT.

E/S CONTROLS FOR BORE / RECEIVING PIT LOCATIONS:

TEMPORARY E/S CONTROLS MUST SURROUND THE ENTIRETY OF BORING OPERATIONS, INCLUDING PIT, EQUIPMENT, ETC. FOR LOCATIONS WITHIN IMPERVIOUS AREAS, TEMPORARY CONTROL WILL BE TRIANGULAR FILTER DIKE (COA STANDARD DETAIL #628S). DIKE FLAP WILL BE CONTINUOUSLY WEIGHTED DOWN THROUGH THE USE OF 1" BY 4" WOOD STRIPS NAILED TO THE PAVEMENT, EXCEPT FOR THE ACCESS POINT. PLACEMENT OF TEMPORARY E/S CONTROLS ACROSS ACCESS POINT WILL BE REQUIRED WHENEVER THE SITE IS NOT ACTIVELY USED. FOR LOCATIONS WITHIN PERVIOUS AREAS, TEMPORARY CONTROL WILL BE SILT FENCE (COA STANDARD DETAIL #642S-1).

SOIL RETENTION BLANKET:

UNLESS OTHERWISE INDICATED IN THE PROJECT DOCUMENTS, INSTALLATION OF SOIL RETENTION BLANKET WILL BE REQUIRED FOR ALL IMPACTED SLOPES GREATER THAN 3:1 AND ALL IMPACTED AREAS WITHIN DRAINAGE CONVEYANCES. (CITY OF AUSTIN STANDARD SPECIFICATION ITEM 605S) SOIL RETENTION BLANKET SUBMITTAL MUST BE APPROVED BY PROJECT ENGINEER INSPECTOR PRIOR TO USE AND MUST INCLUDE PRODUCT AND INSTALLATION DETAILS PROVIDED BY MANUFACTURER. FINISH GRADING MUST BE INSPECTED AND APPROVED BY INSPECTOR PRIOR TO BLANKET INSTALLATION. INSTALLATION MUST BE IN ACCORDANCE WITH MANUFACTURER'S RECOMMENDATIONS AND MUST BE INSPECTED AND APPROVED BY INSPECTOR PRIOR TO ACCEPTANCE.

SOD INSTALLATION:

REVEGETATION WITHIN MANAGED TURF AREAS MUST BE ACCOMPLISHED THROUGH THE INSTALLATION OF SOLID BLOCK GRASS SOD. SOD TYPE MUST MATCH ADJACENT GRASS TYPE. QUESTIONS REGARDING SOD TYPE WILL BE RESOLVED BY THE INSPECTOR. REFER TO CITY OF AUSTIN STANDARD SPECIFICATION ITEM NO. 602S: SODDING FOR EROSION CONTROL, UNLESS OTHERWISE NOTED ON THE APPROVED PLANS.

TxDOT RIGHT OF WAYS:

TOPSOIL, SOIL RETENTION BLANKET, AND REVEGETATION INSTALLED WITHIN TEXAS DEPARTMENT OF TRANSPORTATION (TxDOT) RIGHT OF WAY SHALL COMPLY WITH "REQUIREMENTS FOR INSTALLATION OF UTILITIES WITHIN THE STATE RIGHT OF WAY, AUSTIN DISTRICT".

PROJECT SEQUENCE:

(REFER TO FULL PLAN SET FOR PROJECT-SPECIFIC ADDITIONS, IF APPLICABLE.)

PRIOR TO CONSTRUCTION:

1. SECURE APPLICABLE COA PERMITS, INCLUDING APPROVAL UNDER UTILITY STREET CUT PERMIT.
2. NOTIFY INSPECTOR PRIOR TO PLACEMENT OF E/S CONTROLS AND TREE PROTECTION FENCING. ALL PROPOSED PHASING OF CONTROLS MUST BE SUBMITTED TO AND APPROVED BY THE INSPECTOR PRIOR TO THE FIELD PRE-CONSTRUCTION CONFERENCE.
3. NOTIFY INSPECTOR PRIOR TO PLACEMENT OF TEMPORARY TRAFFIC CONTROLS. ALL PROPOSED PHASING OF CONTROLS MUST BE INDICATED ON APPROVED TEMPORARY TRAFFIC CONTROL PLAN AND SEALED BY PROFESSIONAL ENGINEER.
4. PLACE TEMPORARY E/S CONTROLS AND TREE PROTECTION FENCING PRIOR TO BEGINNING ANY EXCAVATION. INSTALL C.I.P. SIGN, IF APPLICABLE.
5. HOLD ENVIRONMENTAL PRE-CONSTRUCTION CONFERENCE ON SITE WITH THE CONTRACTOR, OWNER'S REPRESENTATIVE, AND INSPECTOR AFTER INSTALLATION OF E/S CONTROLS AND TREE PROTECTION FENCING AND PRIOR TO ANY TRENCHING OPERATIONS.
6. PLACE TEMPORARY TRAFFIC CONTROL DEVICES.

PROJECT CONSTRUCTION:

1. BEGIN CONSTRUCTION. NOTIFY INSPECTOR A MINIMUM OF 48 HOURS IN ADVANCE OF TRANSITION BETWEEN PHASES.
2. CONTACT OWNER TO SCHEDULE FIELD INSPECTION PRIOR TO BEGINNING INSTALLATION OF PERMANENT E/S CONTROLS.
3. COMPLETE RESTORATION OF ALL AREAS DISTURBED BY CONSTRUCTION ACTIVITIES FOR THIS PROJECT. (PERMANENT E/S CONTROLS)
4. HOLD ENVIRONMENTAL POST-CONSTRUCTION CONFERENCE ON SITE WITH THE CONTRACTOR, OWNER'S REPRESENTATIVE, AND INSPECTOR. ALL PERMANENT E/S CONTROLS MUST BE ACCEPTED BY THE INSPECTOR.
5. FOLLOWING FINAL ACCEPTANCE OF PERMANENT E/S CONTROLS BY THE INSPECTOR, REMOVE TEMPORARY E/S CONTROLS. CLEAN EXISTING STORM DRAINAGE SYSTEMS AS NECESSARY DUE TO CONSTRUCTION OPERATIONS.
6. DRESS-UP AND RESTORE ANY AREAS DISTURBED BY REMOVAL OF TEMPORARY E/S CONTROLS DESCRIBED ABOVE.
7. REMOVE TEMPORARY TRAFFIC CONTROL DEVICES.

REQUIRED SUBMITTALS:

SUBMITTALS REQUIRED TO BE APPROVED INCLUDE: SUBMITTALS TRIGGERED BY CITY OF AUSTIN SERIES 600 SPECIFICATIONS AND RELATED SPECIAL PROVISIONS/SPECIFICATIONS, PRE-NOTICE TO PROCEED SCHEDULE, TREE PROTECTION, DEWATERING PLAN, WATERING SCHEDULE FOR REVEGETATION AREAS, AND ANY VEGETATIVE REPLACEMENT PROPOSALS, IF NOT ALREADY PART OF THE PERMITTED PLAN SET.

APPENDIX P-2

CITY OF AUSTIN - STANDARD NOTES TREE AND NATURAL AREA PROTECTION

1. ALL TREES AND NATURAL AREAS SHOWN ON PLAN TO BE PRESERVED SHALL BE PROTECTED DURING CONSTRUCTION WITH TEMPORARY MEASURES.
2. PROTECTIVE MEASURES SHALL BE INSTALLED ACCORDING TO CITY OF AUSTIN STANDARDS FOR TREE PROTECTION.
3. PROTECTIVE MEASURES SHALL BE INSTALLED PRIOR TO THE START OF ANY SITE PREPARATION WORK (CLEARING, GRUBBING OR GRADING), AND SHALL BE MAINTAINED THROUGHOUT ALL PHASES OF THE PROJECT.
4. EROSION AND SEDIMENTATION CONTROL MEASURES SHALL BE INSTALLED OR MAINTAINED IN A MANNER WHICH DOES NOT RESULT IN SOIL BUILD-UP WITHIN TREE DRIP LINES.
5. TREE PROTECTION SHALL COMPLETELY SURROUND THE TREES OR GROUP OF TREES AND WILL BE LOCATED AT THE OUTERMOST LIMIT OF BRANCHES (DRIP LINE), FOR NATURAL AREAS, PROTECTIVE MEASURES SHALL FOLLOW THE LIMIT OF CONSTRUCTION LINE, IN ORDER TO PREVENT THE FOLLOWING:
   A. SOIL COMPACTION IN THE ROOT ZONE AREA RESULTING FROM VEHICULAR TRAFFIC OR STORAGE OF EQUIPMENT OR MATERIALS;
   B. ROOT ZONE DISTURBANCES DUE TO GRADE CHANGES (GREATER THAN 6 INCHES CUT OR FILL) OR TRENCHING NOT REVIEWED AND AUTHORIZED BY THE OWNER;
   C. WOUNDS TO EXPOSED ROOTS, TRUNK OR LIMBS BY MECHANICAL EQUIPMENT;
   D. OTHER ACTIVITIES DETRIMENTAL TO TREES SUCH AS CHEMICAL STORAGE, CEMENT TRUCK CLEANING, AND FIRES.
6. EXCEPTIONS TO INSTALLING PROTECTIVE FENCES AT CRITICAL ROOT ZONES MAY BE PERMITTED IN THE FOLLOWING CASES:
   A. WHERE THERE IS TO BE AN APPROVED GRADE CHANGE, IMPERMEABLE PAVING SURFACE, TREE WELL, OR OTHER SUCH SITE DEVELOPMENT, ERECT THE FENCE APPROXIMATELY 2 TO 4 FEET BEYOND THE AREA DISTURBED;
   B. WHERE PERMEABLE PAVING IS TO BE INSTALLED, ERECT THE FENCE AT THE OUTER LIMITS OF THE PERMEABLE PAVING AREA
   C. WHERE TREES ARE CLOSE TO PROPOSED BUILDINGS, ERECT THE FENCE NO CLOSER THAN 6 FEET TO THE BUILDING
   D. WHERE THERE ARE SEVERE SPACE CONSTRAINTS DUE TO TRACT SIZE, OR OTHER SPECIAL REQUIREMENTS, CONTACT OWNER TO DISCUSS ALTERNATIVES.

SPECIAL NOTE:

FOR THE PROTECTION OF NATURAL AREAS, NO EXCEPTIONS TO INSTALLING FENCES AT THE LIMIT OF CONSTRUCTION LINE WILL BE PERMITTED.

WHERE ANY OF THE ABOVE EXCEPTIONS RESULT IN A FENCE BEING CLOSER THAN 5 FEET TO A TREE TRUNK, PROTECT THE TRUNK WITH STRAPPED-ON PLANKING TO A HEIGHT OF 8 FEET (OR TO THE LIMITS OF LOWER BRANCHING) IN ADDITION TO THE REDUCED FENCING.

7. WHERE ANY OF THE ABOVE EXCEPTIONS RESULT IN AREAS OF UNPROTECTED ROOT ZONES, THOSE AREAS SHOULD BE COVERED WITH 4 INCHES (MINIMUM) OF ORGANIC MULCH TO MINIMIZE SOIL COMPACTION.
8. ALL GRADING WITHIN PROTECTED ROOT ZONE AREAS SHALL BE DONE BY HAND OR WITH SMALL EQUIPMENT TO MINIMIZE ROOT DAMAGE. PRIOR TO GRADING, RELOCATE PROTECTIVE FENCES TO 2 FEET BEHIND THE GRADE CHANGE AREA.
9. ANY ROOTS EXPOSED BY CONSTRUCTION ACTIVITY SHALL BE PRUNED FLUSH WITH THE SOIL. BACKFILL ROOT AREAS WITH GOOD QUALITY TOP SOIL AS SOON AS POSSIBLE. IF EXPOSED ROOT AREAS ARE NOT BACKFILLED WITHIN 2 DAYS, COVER THEM WITH ORGANIC MATERIAL IN A MANNER WHICH REDUCES SOIL TEMPERATURE AND MINIMIZES WATER LOSS DUE TO EVAPORATION.
10. PRIOR TO EXCAVATION OR GRADE CUTTING WITHIN TREE DRIP LINES, MAKE A CLEAN CUT BETWEEN THE DISTURBED AND UNDISTURBED ROOT ZONES WITH A ROCK SAW OR SIMILAR EQUIPMENT TO MINIMIZE DAMAGE TO REMAINING ROOTS.
11. TREES MOST HEAVILY IMPACTED BY CONSTRUCTION ACTIVITIES SHOULD BE WATERED DEEPLY ONCE A WEEK DURING PERIODS OF HOT, DRY WEATHER. TREE CROWNS SHOULD BE SPRAYED WITH WATER PERIODICALLY TO REDUCE DUST ACCUMULATION ON THE LEAVES.
12. ANY TRENCHING REQUIRED FOR THE INSTALLATION OF LANDSCAPE IRRIGATION SHALL BE PLACED AS FAR FROM EXISTING TREE TRUNKS AS POSSIBLE.
13. NO LANDSCAPE TOPSOIL DRESSING GREATER THAN 4 INCHES SHALL BE PERMITTED WITHIN THE DRIP LINE OF TREES. NO SOIL IS PERMITTED ON THE ROOT FLARE OF ANY TREE.
14. PRUNING TO PROVIDE CLEARANCE FOR STRUCTURES, VEHICULAR TRAFFIC AND EQUIPMENT SHALL TAKE PLACE BEFORE CONSTRUCTION BEGINS.
15. ALL FINISHED PRUNING MUST BE DONE ACCORDING TO RECOGNIZED, APPROVED STANDARDS OF THE INDUSTRY (REFERENCE THE NATIONAL ARBORIST ASSOCIATION PRUNING STANDARDS FOR SHADE TREES.
16. DEVIATIONS FROM THE ABOVE NOTES MAY BE CONSIDERED ORDINANCE VIOLATIONS IF THERE IS SUBSTANTIAL NONCOMPLIANCE OR IF A TREE SUSTAINS DAMAGE AS A RESULT.
17. TREES APPROVED FOR REMOVAL SHALL BE REMOVED IN A MANNER WHICH DOES NOT IMPACT TREES TO BE PRESERVED.

SUPPLEMENTAL TREE PROTECTION NOTES

1. ALL TREE PROTECTION MUST COMPLY WITH CITY OF AUSTIN REQUIREMENTS AS OUTLINED IN THE ENVIRONMENTAL CRITERIA MANUAL AND AS INDICATED BY STANDARD COA NOTES AND DETAILS INCLUDED WITHIN THIS DOCUMENT SET. CONTRACTOR SHALL INSTALL PROTECTION PRIOR TO PRE-CONSTRUCTION CONFERENCE, MAKE ADJUSTMENTS TO PROTECTION AS DIRECTED BY THE INSPECTOR, AND MAINTAIN PROTECTION UNTIL PROJECT IS COMPLETE.
2. TYPE AND LOCATION OF ALL TREE PROTECTION MUST BE APPROVED IN THE FIELD BY THE INSPECTOR PRIOR TO CONSTRUCTION.
3. WALK-THROUGH: CONTRACTOR SHALL CONDUCT WALK-THROUGH MEETING WITH INSPECTOR PRIOR TO PERFORMING ANY PRUNING ACTIVITIES ON TREES IN PROJECT AREA. PURPOSE OF WALK-THROUGH WILL BE TWOFOLD. ONE PURPOSE WILL BE TO DETERMINE THE MINIMUM AMOUNT OF PRUNING NECESSARY TO ALLOW CONSTRUCTION WORK TO BE COMPLETED. SECOND PURPOSE WILL BE TO DETERMINE AREAS OF PROJECT IN WHICH EXHAUST DIVERTERS WILL BE REQUIRED ON CONSTRUCTION EQUIPMENT TO PREVENT SCORCHING OF EXISTING TREES.
4. ALL PRUNING MUST BE PERFORMED IN ACCORDANCE WITH ANSI A300 (PART 1) - 2001 AMERICAN NATIONAL STANDARD FOR TREE CARE OPERATIONS (PRUNING), OR LATEST APPROVED VERSION. THIS DOCUMENT MAY BE OBTAINED ONLINE FOR A FEE AT WWW.ANSI.ORG.
5. PRUNING SHALL BE DONE WITH CLEAN, SHARP TOOLS. TO PREVENT BARK TEARS, THE WEIGHT OF THE BRANCH SHALL BE REMOVED BEFORE MAKING FINAL PRUNING CUT.
6. ALL PRUNING SHALL PRESERVE THE NATURAL CHARACTER OF THE TREE.
7. ONLY COLLAR CUTS ARE ACCEPTABLE. NO FLUSH CUTS OR STUB CUTS WILL BE ALLOWED.
8. ALL BRANCHES THAT ARE BROKEN OR DAMAGED DURING CONSTRUCTION SHALL BE REMOVED.
9. PRUNING CUTS OR DAMAGED AREAS ON AN OAK TREE SHALL BE PAINTED WITHIN FIVE MINUTES WITH A STANDARD TREE WOUND DRESSING. TREE WOUND DRESSING SHALL BE EITHER TREEKOTE AEROSOL OR TANGLE FOOT PRUNING SEALER (OR APPROVED EQUAL). THIS ALSO APPLIES TO WOUNDS CREATED BY CONSTRUCTION VEHICLES OR EQUIPMENT.
10. ANY TREE ROOTS THAT ARE EXPOSED, CUT, OR TORN DURING CONSTRUCTION ACTIVITY SHALL BE PRUNED FLUSH WITH THE SURROUNDING SOIL. (REFER ALSO TO NUMBER 9 OF THE TREE AND NATURAL AREA PROTECTION NOTES INCLUDED IN THIS PLAN SET.)
11. ALL TRENCHING WITHIN THE CRITICAL ROOT ZONE OF A TREE TO BE PRESERVED WILL BE SAW CUT.

APPENDIX P-4:

STANDARD SEQUENCE OF CONSTRUCTION

THE FOLLOWING SEQUENCE OF CONSTRUCTION SHALL BE USED FOR ALL DEVELOPMENT. THE APPLICANT IS ENCOURAGED TO PROVIDE ANY ADDITIONAL DETAILS APPROPRIATE FOR THE PARTICULAR DEVELOPMENT.

1. TEMPORARY EROSION AND SEDIMENTATION CONTROLS ARE TO BE INSTALLED AS INDICATED ON THE APPROVED SITE PLAN OR SUBDIVISION CONSTRUCTION PLAN AND IN ACCORDANCE WITH THE EROSION SEDIMENTATION CONTROL PLAN (ESC) AND STORMWATER POLLUTION PREVENTION PLAN (SWPPP) THAT IS REQUIRED TO BE POSTED ON THE SITE. INSTALL TREE PROTECTION, INITIATE TREE MITIGATION MEASURES AND CONDUCT "PRE - CONSTRUCTION" TREE FERTILIZATION (IF APPLICABLE).
2. THE ENVIRONMENTAL PROJECT MANAGER OR SITE SUPERVISOR MUST CONTACT THE DEVELOPMENT SERVICES DEPARTMENT, ENVIRONMENTAL INSPECTION, AT 512-974-2278, 72 HOURS PRIOR TO THE SCHEDULED DATE OF THE REQUIRED ON-SITE PRECONSTRUCTION MEETING.
3. THE ENVIRONMENTAL PROJECT MANAGER, AND/OR SITE SUPERVISOR, AND/OR DESIGNATED RESPONSIBLE PARTY, AND THE GENERAL CONTRACTOR WILL FOLLOW THE EROSION SEDIMENTATION CONTROL PLAN (ESC) AND STORM WATER POLLUTION PREVENTION PLAN (SWPPP) POSTED ON THE SITE. TEMPORARY EROSION AND SEDIMENTATION CONTROLS WILL BE REVISED, IF NEEDED, TO COMPLY WITH CITY INSPECTORS' DIRECTIVES, AND REVISED CONSTRUCTION SCHEDULE RELATIVE TO THE WATER QUALITY PLAN REQUIREMENTS AND THE EROSION PLAN.
4. ROUGH GRADE THE POND(S) AT 100% PROPOSED CAPACITY. EITHER THE PERMANENT OUTLET STRUCTURE OR A TEMPORARY OUTLET MUST BE CONSTRUCTED PRIOR TO DEVELOPMENT OF EMBANKMENT OR EXCAVATION THAT LEADS TO PONDING CONDITIONS. THE OUTLET SYSTEM MUST CONSIST OF A SUMP PIT OUTLET AND AN EMERGENCY SPILLWAY MEETING THE REQUIREMENTS OF THE DRAINAGE CRITERIA MANUAL AND/OR THE ENVIRONMENTAL CRITERIA MANUAL, AS REQUIRED. THE OUTLET SYSTEM SHALL BE PROTECTED FROM EROSION AND SHALL BE MAINTAINED THROUGHOUT THE COURSE OF CONSTRUCTION UNTIL INSTALLATION OF THE PERMANENT WATER QUALITY POND(S).
5. TEMPORARY EROSION AND SEDIMENTATION CONTROLS WILL BE INSPECTED AND MAINTAINED IN ACCORDANCE WITH THE EROSION SEDIMENTATION CONTROL PLAN (ESC) AND STORM WATER POLLUTION PREVENTION PLAN (SWPPP) POSTED ON THE SITE.
6. BEGIN SITE CLEARING/CONSTRUCTION (OR DEMOLITION) ACTIVITIES.
7. IN THE BARTON SPRINGS ZONE, THE ENVIRONMENTAL PROJECT MANAGER OR SITE SUPERVISOR WILL SCHEDULE A MID-CONSTRUCTION CONFERENCE TO COORDINATE CHANGES IN THE CONSTRUCTION SCHEDULE AND EVALUATE EFFECTIVENESS OF THE EROSION CONTROL PLAN AFTER POSSIBLE CONSTRUCTION ALTERATIONS TO THE SITE. PARTICIPANTS SHALL INCLUDE THE CITY INSPECTOR, PROJECT ENGINEER, GENERAL CONTRACTOR AND ENVIRONMENTAL PROJECT MANAGER OR SITE SUPERVISOR. THE ANTICIPATED COMPLETION DATE AND FINAL CONSTRUCTION SEQUENCE AND INSPECTION SCHEDULE WILL BE COORDINATED WITH THE APPROPRIATE CITY INSPECTOR.
8. PERMANENT WATER QUALITY PONDS OR CONTROLS WILL BE CLEANED OUT AND FILTER MEDIA WILL BE INSTALLED PRIOR TO/CONCURRENTLY WITH REVEGETATION OF SITE.
9. COMPLETE CONSTRUCTION AND START REVEGETATION OF THE SITE AND INSTALLATION OF LANDSCAPING.
10. UPON COMPLETION OF THE SITE CONSTRUCTION AND REVEGETATION OF A PROJECT SITE, THE DESIGN ENGINEER SHALL SUBMIT AN ENGINEER'S LETTER OF CONCURRENCE BEARING THE ENGINEER'S SEAL, SIGNATURE, AND DATE TO THE DEVELOPMENT SERVICES DEPARTMENT INDICATING THAT CONSTRUCTION, INCLUDING REVEGETATION, IS COMPLETE AND IN SUBSTANTIAL COMPLIANCE WITH THE APPROVED PLANS. AFTER RECEIVING THIS LETTER, A FINAL INSPECTION WILL BE SCHEDULED BY THE APPROPRIATE CITY INSPECTOR.
11. UPON COMPLETION OF LANDSCAPE INSTALLATION OF A PROJECT SITE, THE LANDSCAPE ARCHITECT SHALL SUBMIT A LETTER OF CONCURRENCE TO THE DEVELOPMENT SERVICES DEPARTMENT INDICATING THAT THE REQUIRED LANDSCAPING IS COMPLETE AND IN SUBSTANTIAL CONFORMITY WITH THE APPROVED PLANS. AFTER RECEIVING THIS LETTER, A FINAL INSPECTION WILL BE SCHEDULED BY THE APPROPRIATE CITY INSPECTOR.
12. AFTER A FINAL INSPECTION HAS BEEN CONDUCTED BY THE CITY INSPECTOR AND WITH APPROVAL FROM THE CITY INSPECTOR, REMOVE THE TEMPORARY EROSION AND SEDIMENTATION CONTROLS AND COMPLETE ANY NECESSARY FINAL REVEGETATION RESULTING FROM REMOVAL OF THE CONTROLS. CONDUCT ANY MAINTENANCE AND REHABILITATION OF THE WATER QUALITY PONDS OR CONTROLS.
13. FOR PIPELINE INSTALLATION WORK WITHIN THE GILLELAND CREEK TRIBUTARY, THE WORK WILL TAKE PLACE IN AND AROUND A NATURAL WATERWAY AND CONTRACTOR SHALL BE PREPARED TO ADDRESS THE IMPACTS TO THE WORK DURING A RAIN EVENT THAT WILL IMPACT THE WATERSHED. CONTRACTOR SHALL BE RESPONSIBLE FOR REVIEWING THEIR WORK SCHEDULE AND THE WEATHER FORECAST TO ANTICIPATE A RAIN EVENT AND SAFE GUARD THE SITE. CONTRACTOR SHALL CHECK THE NATIONAL WEATHER SERVICE WEBSITE FOR AUSTIN NO LATER THAN 8:00 AM CST EACH DAY WORK IS TO BE PERFORMED. CONTRACTOR IS RESPONSIBLE FOR MONITORING WEATHER TO DETERMINE/ANTICIPATE A RAIN EVENT. ALL OPEN TRENCHES MUST BE FILLED AND LOOSE MATERIAL REMOVED FROM WITHIN THE BANKS IF A RAIN EVENT IS ANTICIPATED.
14. DURING CONSTRUCTION, OPEN TRENCHES BETWEEN THE GILLELAND CREEK TRIBUTARY BANKS WILL NOT BE ALLOWED TO REMAIN OPEN WITHOUT THE CONTRACTOR PRESENT. NO OPEN TRENCHES BETWEEN THE BANKS WILL BE ALLOWED OVERNIGHT. CONTRACTOR SHALL COORDINATE ALL PIPELINE INSTALLATION WORK INCLUDING BUT NOT LIMITED TO EXCAVATION, PIPELINE INSTALLATION, BACKFILL, AND COMPACTION TO OCCUR WITHIN THE CONTRACTOR'S WORKING HOURS. ALL LOOSE EARTH MATERIAL AND SPOILS MUST BE REMOVED FROM WITHIN THE BANKS ON A DAILY BASIS.

APPENDIX P-6:

REMEDIAL TREE CARE NOTES
AERATION AND SUPPLEMENTAL NUTRIENT REQUIREMENTS
FOR TREES WITHIN CONSTRUCTION AREAS

1. AS A COMPONENT OF AN EFFECTIVE REMEDIAL TREE CARE PROGRAM PER ENVIRONMENTAL CRITERIA MANUAL SECTION 3.5.4, PRESERVED TREES WITHIN THE LIMITS OF CONSTRUCTION MAY REQUIRE SOIL AERATION AND SUPPLEMENTAL NUTRIENTS. SOIL AND/OR FOLIAR ANALYSIS SHOULD BE USED TO DETERMINE THE NEED FOR SUPPLEMENTAL NUTRIENTS. THE CITY ARBORIST MAY REQUIRE THESE ANALYSES AS PART OF A COMPREHENSIVE TREE CARE PLAN. SOIL PH SHALL BE CONSIDERED WHEN DETERMINING THE FERTILIZATION COMPOSITION AS SOIL PH INFLUENCES THE TREES ABILITY TO UPTAKE NUTRIENTS FROM THE SOIL. IF ANALYSES INDICATE THE NEED FOR SUPPLEMENTAL NUTRIENTS, THEN HUMATE/NUTRIENT SOLUTIONS WITH MYCORRHIZAE COMPONENTS ARE HIGHLY RECOMMENDED. IN ADDITION, SOIL ANALYSIS MAY BE NEEDED TO DETERMINE IF ORGANIC MATERIAL OR BENEFICIAL MICROORGANISMS ARE NEEDED TO IMPROVE SOIL HEALTH. MATERIALS AND METHODS ARE TO BE APPROVED BY THE CITY ARBORIST (512-974-1876) PRIOR TO APPLICATION. THE OWNER OR GENERAL CONTRACTOR SHALL SELECT A FERTILIZATION CONTRACTOR AND INSURE COORDINATION WITH THE CITY ARBORIST.
2. PRE-CONSTRUCTION TREATMENT SHOULD BE APPLIED IN THE APPROPRIATE SEASON, IDEALLY THE SEASON PRECEDING THE PROPOSED CONSTRUCTION. MINIMALLY, AREAS TO BE TREATED INCLUDE THE ENTIRE CRITICAL ROOT ZONE OF TREES AS DEPICTED ON THE CITY APPROVED PLANS. TREATMENT SHOULD INCLUDE, BUT NOT LIMITED TO, FERTILIZATION, SOIL TREATMENT, MULCHING, AND PROPER PRUNING.
3. POST-CONSTRUCTION TREATMENT SHOULD OCCUR DURING FINAL REVEGETATION OR AS DETERMINED BY A QUALIFIED ARBORIST AFTER CONSTRUCTION. CONSTRUCTION ACTIVITIES OFTEN RESULT IN A REDUCTION IN SOIL MACRO AND MICRO PORES AND AN INCREASE IN SOIL BULK DENSITY. TO AMELIORATE THE DEGRADED SOIL CONDITIONS, AERATION VIA WATER AND/OR AIR INJECTED INTO THE SOIL IS NEEDED OR BY OTHER METHODS AS APPROVED BY THE CITY ARBORIST. THE PROPOSED NUTRIENT MIX SPECIFICATIONS AND SOIL AND/OR FOLIAR ANALYSIS RESULTS NEED TO BE PROVIDED TO AND APPROVED BY THE CITY ARBORIST PRIOR TO APPLICATION (FAX # 512-974-3010). CONSTRUCTION WHICH WILL BE COMPLETED IN LESS THAN 90 DAYS MAY USE MATERIALS AT ½ RECOMMENDED RATES. ALTERNATIVE ORGANIC FERTILIZER MATERIALS ARE ACCEPTABLE WHEN APPROVED BY THE CITY ARBORIST. WITHIN 7 DAYS AFTER FERTILIZATION IS PERFORMED, THE CONTRACTOR SHALL PROVIDE DOCUMENTATION OF THE WORK PERFORMED TO THE CITY ARBORIST, PLANNING AND DEVELOPMENT REVIEW DEPARTMENT. P.O. BOX 1088, AUSTIN, TX 78767. THIS NOTE SHOULD BE REFERENCED AS ITEM #1 IN THE SEQUENCE OF CONSTRUCTION.

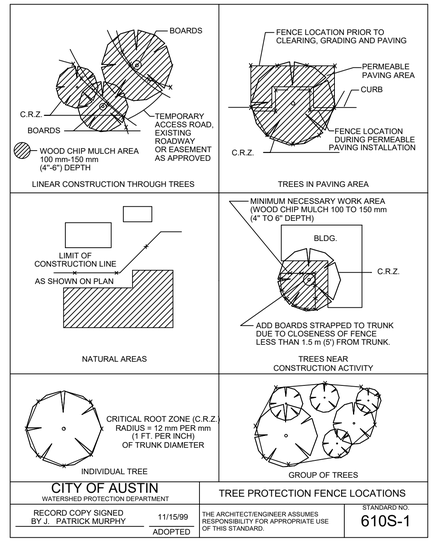

CITY OF AUSTIN WATERSHED PROTECTION DEPARTMENT		TREE PROTECTION FENCE LOCATIONS
RECORD COPY SIGNED BY J. PATRICK MURPHY	11/15/99 ADOPTED	THE ARCHITECT/ENGINEER ASSUMES RESPONSIBILITY FOR APPROPRIATE USE OF THIS STANDARD.
		STANDARD NO. 610S-1

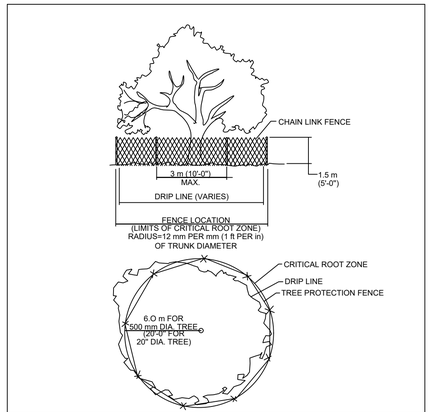

CITY OF AUSTIN WATERSHED PROTECTION DEPARTMENT		TREE PROTECTION FENCE TYPE A - CHAIN LINK
RECORD COPY SIGNED BY J. PATRICK MURPHY	11/15/99 ADOPTED	THE ARCHITECT/ENGINEER ASSUMES RESPONSIBILITY FOR APPROPRIATE USE OF THIS STANDARD.
		STANDARD NO. 610S-2

THIS CONFORMED DOCUMENT IS RELEASED FOR THE CONVENIENCE OF THE CONTRACTOR UNDER THE AUTHORITY OF:

CASEY G. WAUTERS, P.E. — 11-01-22 DATE
TX LIC NO. 93889

SEE DISCLAIMER FOR LIMITATIONS OF USE.

CONTRACT DOCUMENTS DATED JUNE 10, 2022, AS PART OF THE BIDDING DOCUMENTS (DRAWINGS AND SPECIFICATIONS) AND SUBSEQUENTLY ISSUED ADDENDA HAVE BEEN MERGED INTO ONE CONFORMING SET OF DOCUMENTS FOR THE CONVENIENCE OF THE CONTRACTOR. IF INCONSISTENCIES OR AMBIGUITIES BETWEEN "CONFORMED" DOCUMENTS AND CONTRACT DOCUMENTS ARE FOUND, THE CONTRACT DOCUMENTS SHALL GOVERN.

REV	DATE	BY	DESCRIPTION
			CONFORMED DOCUMENTS

DESIGNED AW
DRAWN AW
CHECKED SGE
DATE FEBRUARY 2022

** ORIGINAL SEALED BY CASEY G. WAUTERS, P.E. 2/28/2022 TX PE 93889 **

AECOM TECHNICAL SERVICES INC.
13640 BRIARWICK DRIVE, SUITE 200
AUSTIN, TEXAS 78729
WWW.AECOM.COM
TBPE REG. NO. F-3580

TBPE No. F-882

CITY OF AUSTIN

CITY OF AUSTIN
WILD HORSE RANCH WWTP EXPANSION
CIVIL
TREE PROTECTION ENVIRONMENTAL DETAILS AND NOTES

VERIFY SCALES
BAR IS ONE INCH ON ORIGINAL DRAWING
0 — 1"
IF NOT ONE INCH ON THIS SHEET, ADJUST SCALES ACCORDINGLY

JOB NO. 10976A.10
DRAWING NO. 00GC06
SHEET NO. 226 OF 464

LAST SAVED BY: dsevert

PROJECT NO. 9585A10 FILE NAME: 9585A10_SheetSeed.dgn

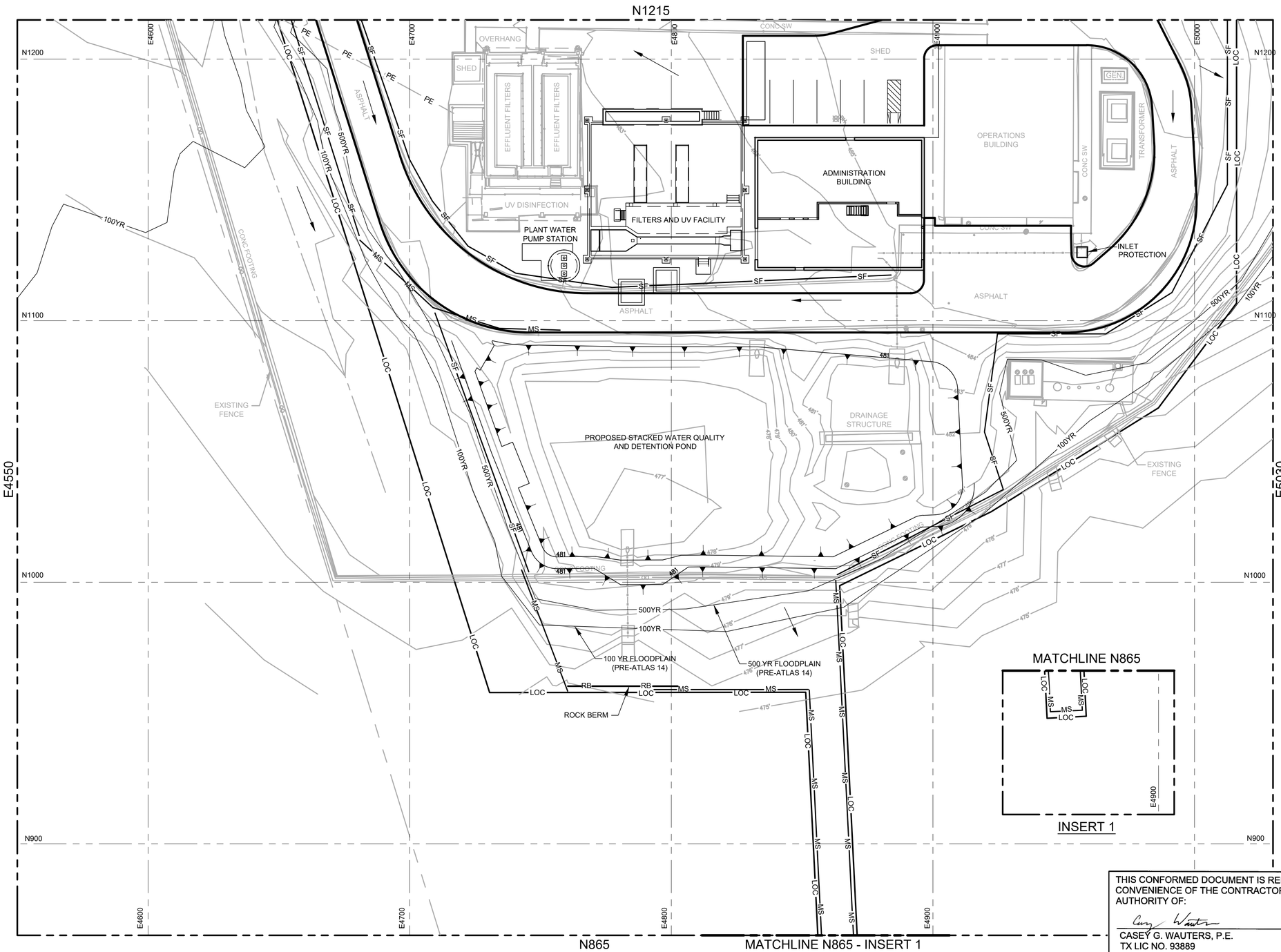

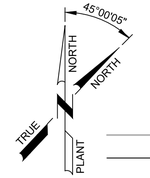

LEGEND

- EXISTING
- PROPOSED
- 100YR — 100 YEAR FLOODPLAIN
- 500YR — 500 YEAR FLOODPLAIN
- SF — SILT FENCE
- MS — MULCH SOCK
- LOC — LIMITS OF CONSTRUCTION
- RB — ROCK BERM

NOTES:

1. REFERENCE DRAWING 00G06 FOR OVERALL WWTP SITE PLAN.
2. REFERENCE DRAWING 00G14 FOR ALL SURVEY CONTROL POINTS AND COORDINATES.
3. ACTUAL FIELD CONDITIONS MAY BE DIFFERENT FROM THOSE SHOWN IN THIS DRAWING. CONTRACTOR TO FIELD VERIFY INSTALLED CONDITIONS IMPACTING OR IMPACTED BY THIS WORK PRIOR TO INITIATING WORK.
4. CONTRACTOR TO COORDINATE ALL STORAGE AREAS WITH THE OWNER TO ENSURE NO ACCESS WAYS, MANHOLES OR VALVES ARE BLOCKED OR COVERED.
5. ALL ACCESS WAYS AND DRIVEWAYS TO BE KEPT CLEAR TO ALLOW OPERATORS ACCESS TO ALL AREAS FOR MAINTENANCE AND EMERGENCIES. CONTRACTOR TO COORDINATE THE DELIVERY AND LOADING / UNLOADING OF EQUIPMENT WITH OWNER AT A MINIMUM OF 48 HOURS PRIOR TO DELIVERY.
6. CONTRACTOR TO NOT OBSTRUCT DELIVERIES ON THE PLANT ACCESS ROAD. WORK WITHIN THE ACCESS ROAD MUST BE DONE IN A WAY THAT CAN BE COVERED TO PROVIDE DELIVERY ACCESS. ACCESS ROAD CLOSURES MUST BE AGREED UPON WITH THE CITY OF AUSTIN IN ADVANCE.
7. CONTRACTOR SHALL NOT BLOCK DRAINAGE SWALES, DITCHES, CULVERTS, OR ANY OTHER STORM WATER DRAINAGE WAY AT ANY TIME DURING EXECUTION OF THE PROJECT. DAMAGE RESULTING FROM FLOODING DUE TO BLOCKED DRAINAGE WAYS WILL BE THE RESPONSIBILITY OF THE CONTRACTOR AT NO ADDITIONAL PAY.
8. EROSION AND SEDIMENTATION CONTROL:
   - A. IF DISTURBED AREA IS NOT TO BE WORKED FOR MORE THAN 14 DAYS, DISTURBED AREA NEEDS TO BE STABILIZED BY REVEGETATION, MULCH, TARP, OR REVEGETATION MATTING. [ECM 1.4.4.B.3, SECTION 5.I]
   - B. ENVIRONMENTAL INSPECTOR HAS THE AUTHORITY TO ADD AND/OR MODIFY EROSION/SEDIMENTATION CONTROLS ON SITE TO KEEP PROJECT IN COMPLIANCE WITH THE CITY OF AUSTIN RULES AND REGULATIONS. [LDC 25-8-182]
   - C. CONTRACTOR SHALL UTILIZE DUST CONTROL MEASURES DURING SITE CONSTRUCTION SUCH AS IRRIGATION TRUCKS AND MULCHING AS PER ECM 1.4.5(A), OR AS DIRECTED BY THE ENVIRONMENTAL INSPECTOR.
   - D. THE CONTRACTOR WILL CLEAN UP SPOILS THAT MIGRATE ONTO THE ROADS A MINIMUM OF ONCE DAILY. [ECM 1.4.4.D.4]
   - E. ALL SPOILS ARE TO BE PLACED BACK IN TRENCH EVERY NIGHT; OR IF SPOILS PILES ARE TO REMAIN OVERNIGHT, SPOILS MUST BE PLACED ON THE UPHILL SIDE OF TRENCH WITHIN THE LOC.
   - F. WHEN INSTALLING MULCH, IF DAYLIGHT CAN BE SEEN UNDER MULCH SOCK DUE TO TOPOGRAPHIC CHANGES, ADD ADDITIONAL ROWS OF MULCH SOCK TO CLOSE GAPS.
   - G. ONLY RUBBER-TIRED EQUIPMENT IS ALLOWED WITHIN THE CWQZ AND FLOODPLAIN. NO TRACK EQUIPMENT IS ALLOWED.
   - H. ALL EQUIPMENT AND SPOILS ARE TO BE REMOVED FROM THE CREEK, THE CWQZ, AND 100-YEAR FLOODPLAIN NIGHTLY.

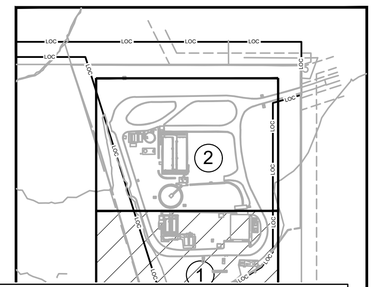

THIS CONFORMED DOCUMENT IS RELEASED FOR THE CONVENIENCE OF THE CONTRACTOR UNDER THE AUTHORITY OF:

CASEY G. WAUTERS, P.E. — 11-01-22
TX LIC NO. 93889 — DATE

SEE DISCLAIMER FOR LIMITATIONS OF USE.

CONTRACT DOCUMENTS DATED JUNE 10, 2022, AS PART OF THE BIDDING DOCUMENTS (DRAWINGS AND SPECIFICATIONS) AND SUBSEQUENTLY ISSUED ADDENDA HAVE BEEN MERGED INTO ONE CONFORMING SET OF DOCUMENTS FOR THE CONVENIENCE OF THE CONTRACTOR. IF INCONSISTENCIES OR AMBIGUITIES BETWEEN "CONFORMED" DOCUMENTS AND CONTRACT DOCUMENTS ARE FOUND, THE CONTRACT DOCUMENTS SHALL GOVERN.

REV	DATE	BY	DESCRIPTION
			CONFORMED DOCUMENTS

DESIGNED CW
DRAWN AW
CHECKED SGE
DATE FEBRUARY 2022

** ORIGINAL SEALED BY CASEY G. WAUTERS, P.E. 2/28/2022 TX PE 93889 **

AECOM TECHNICAL SERVICES INC.
13640 BRIARWICK DRIVE, SUITE 200
AUSTIN, TEXAS 78729
WWW.AECOM.COM
TBPE REG. NO. F-3580

TBPE No. F-882

CITY OF AUSTIN

CITY OF AUSTIN
WILD HORSE RANCH WWTP EXPANSION
CIVIL
EX. TOPO, E / S CONTROL & TREE PROTECTION PLANT SITE PLAN - (SHEET 1 OF 2)

VERIFY SCALES
BAR IS ONE INCH ON ORIGINAL DRAWING
0 1"
IF NOT ONE INCH ON THIS SHEET, ADJUST SCALES ACCORDINGLY

JOB NO. 10976A.10
DRAWING NO. 00GC07
SHEET NO. 227 OF 464

LAST SAVED BY:

PROJECT NO. 9585A10 FILE NAME: 01C01

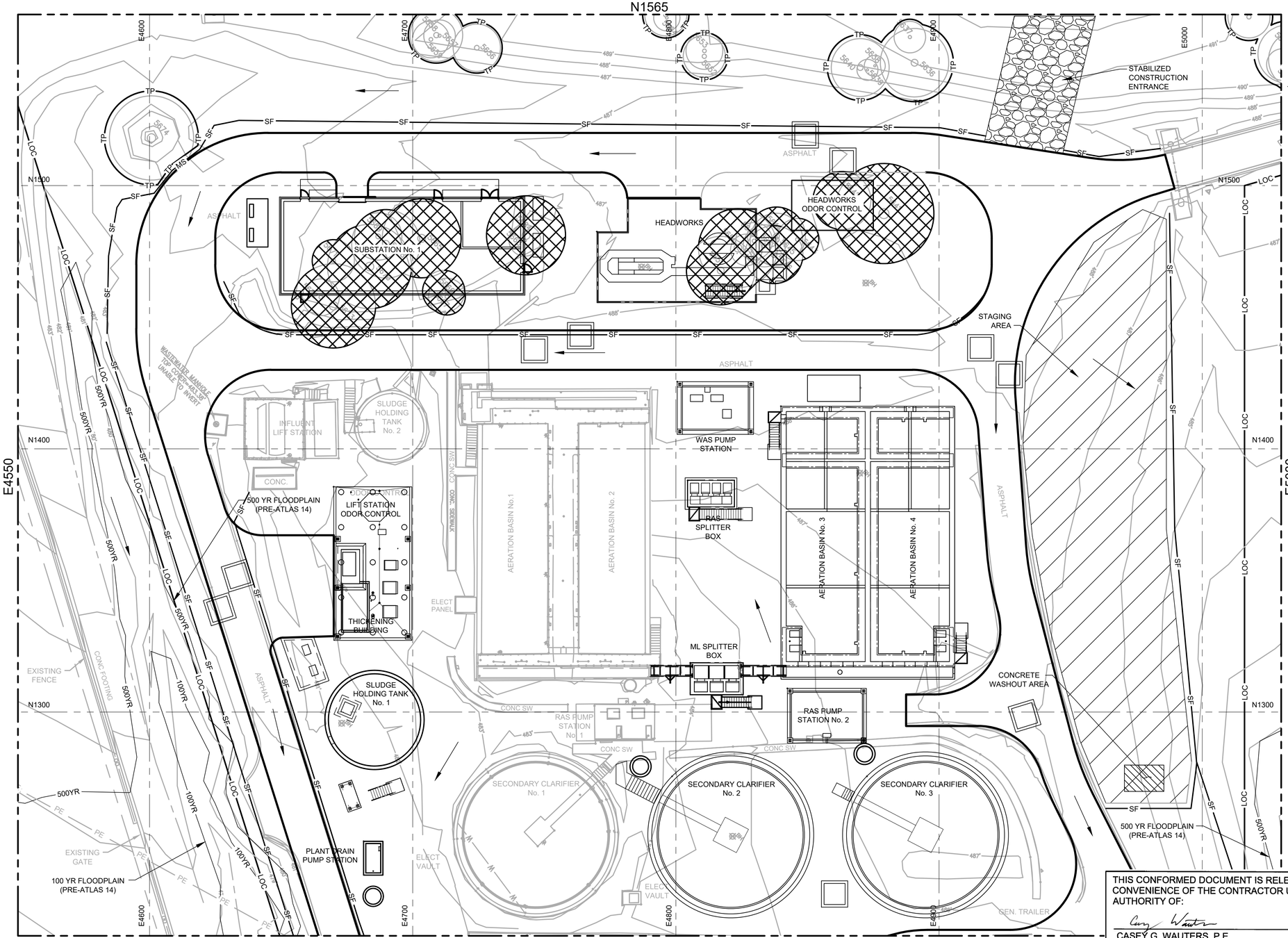

45°00'05"
NORTH
NORTH
TRUE
PLANT

SCALE: 1" = 20'

LEGEND

- EXISTING
- PROPOSED
- 100YR — 100 YEAR FLOODPLAIN
- 500YR — 500 YEAR FLOODPLAIN
- SF — SF — SILT FENCE
- LOC — LOC — LIMITS OF CONSTRUCTION
- RB — RB — ROCK BERM
- TREE TO BE REMOVED
- TREE TO BE PROTECTED

NOTES:

1. REFERENCE DRAWING 00G06 FOR OVERALL WWTP SITE PLAN.
2. REFERENCE DRAWING 00G14 FOR ALL SURVEY CONTROL POINTS AND COORDINATES.
3. ACTUAL FIELD CONDITIONS MAY BE DIFFERENT FROM THOSE SHOWN IN THIS DRAWING. CONTRACTOR TO FIELD VERIFY INSTALLED CONDITIONS IMPACTING OR IMPACTED BY THIS WORK PRIOR TO INITIATING WORK.
4. CONTRACTOR TO COORDINATE ALL STORAGE AREAS WITH THE OWNER TO ENSURE NO ACCESS WAYS, MANHOLES OR VALVES ARE BLOCKED OR COVERED.
5. ALL ACCESS WAYS AND DRIVEWAYS TO BE KEPT CLEAR TO ALLOW OPERATORS ACCESS TO ALL AREAS FOR MAINTENANCE AND EMERGENCIES. CONTRACTOR TO COORDINATE THE DELIVERY AND LOADING / UNLOADING OF EQUIPMENT WITH OWNER AT A MINIMUM OF 48 HOURS PRIOR TO DELIVERY.
6. CONTRACTOR TO NOT OBSTRUCT DELIVERIES ON THE PLANT ACCESS ROAD. WORK WITHIN THE ACCESS ROAD MUST BE DONE IN A WAY THAT CAN BE COVERED TO PROVIDE DELIVERY ACCESS. ACCESS ROAD CLOSURES MUST BE AGREED UPON WITH THE CITY OF AUSTIN IN ADVANCE.
7. CONTRACTOR SHALL NOT BLOCK DRAINAGE SWALES, DITCHES, CULVERTS, OR ANY OTHER STORM WATER DRAINAGE WAY AT ANY TIME DURING EXECUTION OF THE PROJECT. DAMAGE RESULTING FROM FLOODING DUE TO BLOCKED DRAINAGE WAYS WILL BE THE RESPONSIBILITY OF THE CONTRACTOR AT NO ADDITIONAL PAY.
8. EROSION AND SEDIMENTATION CONTROL:
   - A. IF DISTURBED AREA IS NOT TO BE WORKED FOR MORE THAN 14 DAYS, DISTURBED AREA NEEDS TO BE STABILIZED BY REVEGETATION, MULCH, TARP, OR REVEGETATION MATTING. [ECM 1.4.4.B.3, SECTION 5.I]
   - B. ENVIRONMENTAL INSPECTOR HAS THE AUTHORITY TO ADD AND/OR MODIFY EROSION/SEDIMENTATION CONTROLS ON SITE TO KEEP PROJECT IN COMPLIANCE WITH THE CITY OF AUSTIN RULES AND REGULATIONS. [LDC 25-8-182]
   - C. CONTRACTOR SHALL UTILIZE DUST CONTROL MEASURES DURING SITE CONSTRUCTION SUCH AS IRRIGATION TRUCKS AND MULCHING AS PER ECM 1.4.5(A), OR AS DIRECTED BY THE ENVIRONMENTAL INSPECTOR.
   - D. THE CONTRACTOR WILL CLEAN UP SPOILS THAT MIGRATE ONTO THE ROADS A MINIMUM OF ONCE DAILY. [ECM 1.4.4.D.4]
   - E. ALL SPOILS ARE TO BE PLACED BACK IN TRENCH EVERY NIGHT; OR IF SPOILS PILES ARE TO REMAIN OVERNIGHT, SPOILS MUST BE PLACED ON THE UPHILL SIDE OF TRENCH WITHIN THE LOC.
   - F. WHEN INSTALLING MULCH, IF DAYLIGHT CAN BE SEEN UNDER MULCH SOCK DUE TO TOPOGRAPHIC CHANGES, ADD ADDITIONAL ROWS OF MULCH SOCK TO CLOSE GAPS.
   - G. ONLY RUBBER-TIRED EQUIPMENT IS ALLOWED WITHIN THE CWQZ AND FLOODPLAIN. NO TRACK EQUIPMENT IS ALLOWED.
   - H. ALL EQUIPMENT AND SPOILS ARE TO BE REMOVED FROM THE CREEK, THE CWQZ, AND 100-YEAR FLOODPLAIN NIGHTLY.

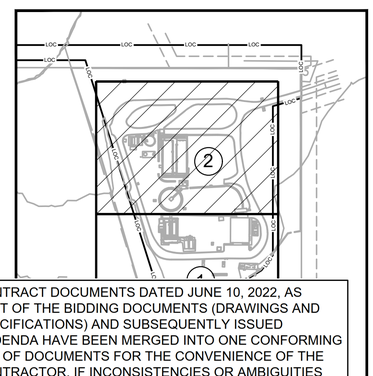

THIS CONFORMED DOCUMENT IS RELEASED FOR THE CONVENIENCE OF THE CONTRACTOR UNDER THE AUTHORITY OF:

CASEY G. WAUTERS, P.E.
TX LIC NO. 93889
11-01-22
DATE

SEE DISCLAIMER FOR LIMITATIONS OF USE.

CONTRACT DOCUMENTS DATED JUNE 10, 2022, AS PART OF THE BIDDING DOCUMENTS (DRAWINGS AND SPECIFICATIONS) AND SUBSEQUENTLY ISSUED ADDENDA HAVE BEEN MERGED INTO ONE CONFORMING SET OF DOCUMENTS FOR THE CONVENIENCE OF THE CONTRACTOR. IF INCONSISTENCIES OR AMBIGUITIES BETWEEN "CONFORMED" DOCUMENTS AND CONTRACT DOCUMENTS ARE FOUND, THE CONTRACT DOCUMENTS SHALL GOVERN.

REV	DATE	BY	DESCRIPTION
			CONFORMED DOCUMENTS

DESIGNED CW
DRAWN AW
CHECKED SGE
DATE FEBRUARY 2022

** ORIGINAL SEALED BY CASEY G. WAUTERS, P.E. 2/28/2022 TX PE 93889 **

AECOM TECHNICAL SERVICES INC.
13640 BRIARWICK DRIVE, SUITE 200
AUSTIN, TEXAS 78729
WWW.AECOM.COM
TBPE REG. NO. F-3580

TBPE No. F-882

CITY OF AUSTIN

CITY OF AUSTIN
WILD HORSE RANCH WWTP EXPANSION
CIVIL
EX. TOPO, E / S CONTROL & TREE PROTECTION PLANT SITE PLAN - (SHEET 2 OF 2)

VERIFY SCALES
BAR IS ONE INCH ON ORIGINAL DRAWING
0 — 1"
IF NOT ONE INCH ON THIS SHEET, ADJUST SCALES ACCORDINGLY

JOB NO. 10976A.10
DRAWING NO. 00GC08
SHEET NO. 228 OF 464

LAST SAVED BY: dsevert

PROJECT NO. 9585A10 FILE NAME: 01C02

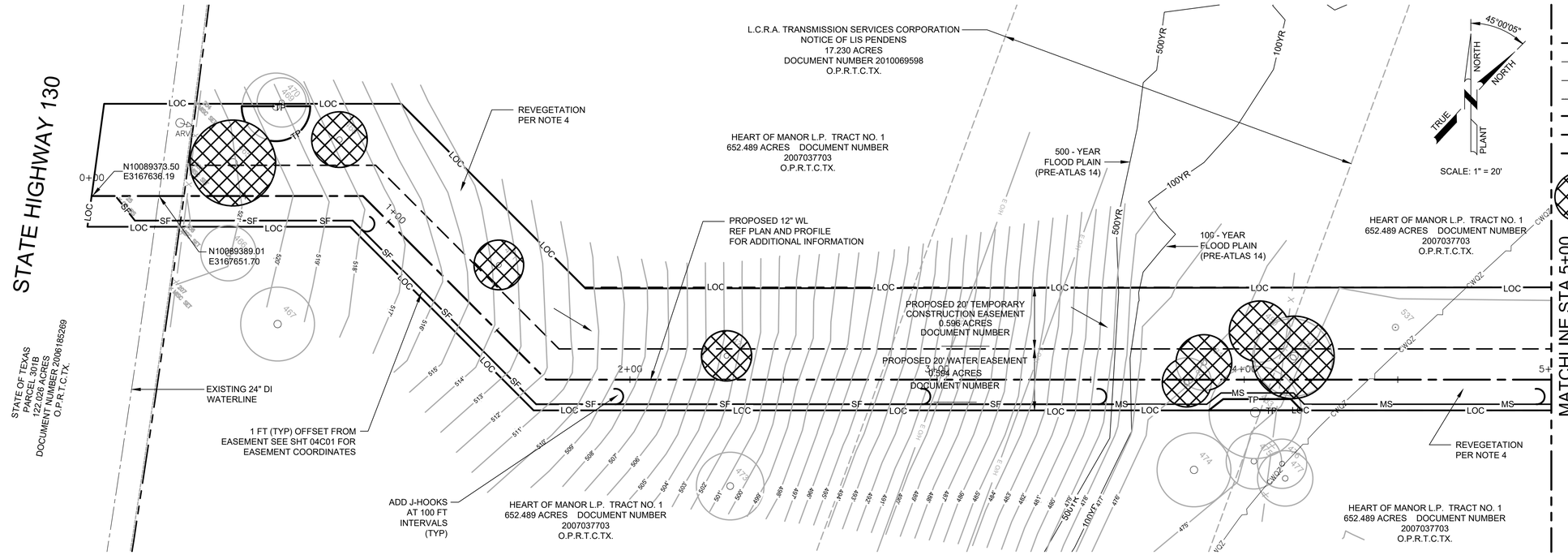

LEGEND

- EASEMENTS
- 100YR — 100 YEAR FLOODPLAIN
- 500YR — 500 YEAR FLOODPLAIN
- CL FLOW STREAM
- SF — SF — SILT FENCE
- LOC — LOC — LIMITS OF CONSTRUCTION
- RB — RB — ROCK BERM
- TREE TO BE REMOVED
- TREE TO BE PROTECTED

NOTES:

1. REFERENCE DRAWING 00G14 FOR ALL SURVEY CONTROL POINTS AND COORDINATES.
2. ACTUAL FIELD CONDITIONS MAY BE DIFFERENT FROM THOSE SHOWN IN THIS DRAWING. CONTRACTOR TO FIELD VERIFY INSTALLED CONDITIONS IMPACTING OR IMPACTED BY THIS WORK PRIOR TO INITIATING WORK.
3. CONTRACTOR SHALL NOT BLOCK DRAINAGE SWALES, DITCHES, CULVERTS, OR ANY OTHER STORM WATER DRAINAGE WAY AT ANY TIME DURING EXECUTION OF THE PROJECT. DAMAGE RESULTING FROM FLOODING DUE TO BLOCKED DRAINAGE WAYS WILL BE THE RESPONSIBILITY OF THE CONTRACTOR AT NO ADDITIONAL PAY.
4. USE COA SPECIFICATION 609S FOR REVEGETATION WITHIN THE CRITICAL WATER QUALITY ZONE AND COA SPECIFICATION 604S FOR REVEGETATION OUTSIDE THE CRITICAL WATER QUALITY ZONE.
5. FINAL STABILIZATION WILL BE ACHIEVED WHEN THERE IS 95% VEGETATIVE COVERAGE AND THERE ARE NO BARE SPOTS LARGER THAN 16 SQUARE FEET,
6. PLANTINGS AND SEEDED AREAS WITHIN THE CRITICAL WATER QUALITY ZONE SHALL BE PROTECTED FROM DISTURBANCE BY CATTLE AND OTHER GRAZING ANIMALS.
7. USE OF PROPOSED WATER EASEMENT AND TEMPORARY CONSTRUCTION EASEMENT IS LIMITED TO CONSTRUCTION OF THE UTILITY LINE ONLY. IT IS NOT ALLOWED TO BE USED AS A CONSTRUCTION ACCESS ROAD TO THE PLANT SITE.
8. EROSION AND SEDIMENTATION CONTROL:
   - A. IF DISTURBED AREA IS NOT TO BE WORKED FOR MORE THAN 14 DAYS, DISTURBED AREA NEEDS TO BE STABILIZED BY REVEGETATION, MULCH, TARP, OR REVEGETATION MATTING. [ECM 1.4.4.B.3, SECTION 5.I]
   - B. ENVIRONMENTAL INSPECTOR HAS THE AUTHORITY TO ADD AND/OR MODIFY EROSION/SEDIMENTATION CONTROLS ON SITE TO KEEP PROJECT IN COMPLIANCE WITH THE CITY OF AUSTIN RULES AND REGULATIONS. [LDC 25-8-182]
   - C. CONTRACTOR SHALL UTILIZE DUST CONTROL MEASURES DURING SITE CONSTRUCTION SUCH AS IRRIGATION TRUCKS AND MULCHING AS PER ECM 1.4.5(A), OR AS DIRECTED BY THE ENVIRONMENTAL INSPECTOR.
   - D. THE CONTRACTOR WILL CLEAN UP SPOILS THAT MIGRATE ONTO THE ROADS A MINIMUM OF ONCE DAILY. [ECM 1.4.4.D.4]
   - E. ALL SPOILS ARE TO BE PLACED BACK IN TRENCH EVERY NIGHT; OR IF SPOILS PILES ARE TO REMAIN OVERNIGHT, SPOILS MUST BE PLACED ON THE UPHILL SIDE OF TRENCH WITHIN THE LOC.
   - F. WHEN INSTALLING MULCH, IF DAYLIGHT CAN BE SEEN UNDER MULCH SOCK DUE TO TOPOGRAPHIC CHANGES, ADD ADDITIONAL ROWS OF MULCH SOCK TO CLOSE GAPS.
   - G. ONLY RUBBER-TIRED EQUIPMENT IS ALLOWED WITHIN THE CWQZ AND FLOODPLAIN. NO TRACK EQUIPMENT IS ALLOWED.
   - H. ALL EQUIPMENT AND SPOILS ARE TO BE REMOVED FROM THE CREEK, THE CWQZ, AND 100-YEAR FLOODPLAIN NIGHTLY.

THIS CONFORMED DOCUMENT IS RELEASED FOR THE CONVENIENCE OF THE CONTRACTOR UNDER THE AUTHORITY OF:

CASEY G. WAUTERS, P.E.
TX LIC NO. 93889

11-01-22
DATE

SEE DISCLAIMER FOR LIMITATIONS OF USE.

CONTRACT DOCUMENTS DATED JUNE 10, 2022, AS PART OF THE BIDDING DOCUMENTS (DRAWINGS AND SPECIFICATIONS) AND SUBSEQUENTLY ISSUED ADDENDA HAVE BEEN MERGED INTO ONE CONFORMING SET OF DOCUMENTS FOR THE CONVENIENCE OF THE CONTRACTOR. IF INCONSISTENCIES OR AMBIGUITIES BETWEEN "CONFORMED" DOCUMENTS AND CONTRACT DOCUMENTS ARE FOUND, THE CONTRACT DOCUMENTS SHALL GOVERN.

REV	DATE	BY	DESCRIPTION
			CONFORMED DOCUMENTS

DESIGNED CW
DRAWN AW
CHECKED SGE
DATE FEBRUARY 2022

**
ORIGINAL
SEALED BY
CASEY G. WAUTERS, P.E.
2/28/2022
TX PE 93889
**

AECOM TECHNICAL SERVICES INC.
13640 BRIARWICK DRIVE, SUITE 200
AUSTIN, TEXAS 78729
WWW.AECOM.COM
TBPE REG. No. F-3580

TBPE No. F-882

CITY OF AUSTIN

CITY OF AUSTIN
WILD HORSE RANCH WWTP EXPANSION
CIVIL
EX. TOPO, E / S CONTROL & TREE PROTECTION WATERLINE PLAN - (SHEET 1 OF 2)

VERIFY SCALES
BAR IS ONE INCH ON ORIGINAL DRAWING
0 1"
IF NOT ONE INCH ON THIS SHEET, ADJUST SCALES ACCORDINGLY

JOB NO. 10976A.10
DRAWING NO. 00GC09
SHEET NO. 229 OF 464

LAST SAVED BY: dsievert

PROJECT NO. 9585A10 FILE NAME: 01C02

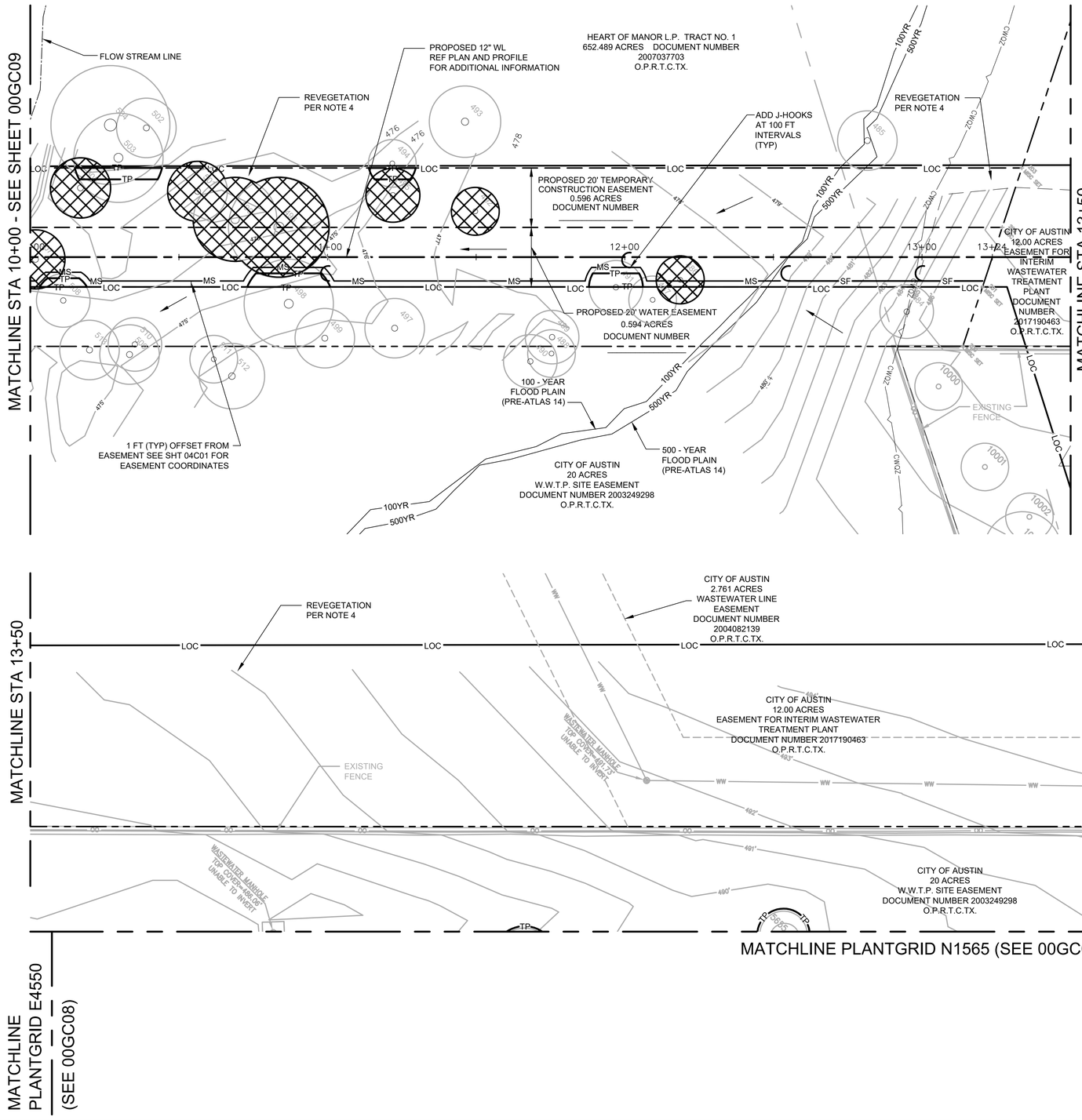

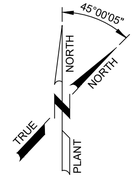

SCALE: 1" = 20'

LEGEND

- EASEMENTS
- 100YR — 100 YEAR FLOODPLAIN
- 500YR — 500 YEAR FLOODPLAIN
- FLOW STREAM CL
- SF — SILT FENCE
- LOC — LIMITS OF CONSTRUCTION
- RB — ROCK BERM
- TREE TO BE REMOVED
- TREE TO BE PROTECTED

NOTES:

1. REFERENCE DRAWING 00G14 FOR ALL SURVEY CONTROL POINTS AND COORDINATES.
2. ACTUAL FIELD CONDITIONS MAY BE DIFFERENT FROM THOSE SHOWN IN THIS DRAWING. CONTRACTOR TO FIELD VERIFY INSTALLED CONDITIONS IMPACTING OR IMPACTED BY THIS WORK PRIOR TO INITIATING WORK.
3. CONTRACTOR SHALL NOT BLOCK DRAINAGE SWALES, DITCHES, CULVERTS, OR ANY OTHER STORM WATER DRAINAGE WAY AT ANY TIME DURING EXECUTION OF THE PROJECT. DAMAGE RESULTING FROM FLOODING DUE TO BLOCKED DRAINAGE WAYS WILL BE THE RESPONSIBILITY OF THE CONTRACTOR AT NO ADDITIONAL PAY.
4. USE COA SPECIFICATION 609S FOR REVEGETATION WITHIN THE CRITICAL WATER QUALITY ZONE AND COA SPECIFICATION 604S FOR REVEGETATION OUTSIDE THE CRITICAL WATER QUALITY ZONE.
5. FINAL STABILIZATION WILL BE ACHIEVED WHEN THERE IS 95% VEGETATIVE COVERAGE AND THERE ARE NO BARE SPOTS LARGER THAN 16 SQUARE FEET,
6. PLANTINGS AND SEEDED AREAS WITHIN THE CRITICAL WATER QUALITY ZONE SHALL BE PROTECTED FROM DISTURBANCE BY CATTLE AND OTHER GRAZING ANIMALS.
7. USE OF PROPOSED WATER EASEMENT AND TEMPORARY CONSTRUCTION EASEMENT IS LIMITED TO CONSTRUCTION OF THE UTILITY LINE ONLY. IT IS NOT ALLOWED TO BE USED AS A CONSTRUCTION ACCESS ROAD TO THE PLANT SITE.
8. EROSION AND SEDIMENTATION CONTROL:
   - A. IF DISTURBED AREA IS NOT TO BE WORKED FOR MORE THAN 14 DAYS, DISTURBED AREA NEEDS TO BE STABILIZED BY REVEGETATION, MULCH, TARP, OR REVEGETATION MATTING. [ECM 1.4.4.B.3, SECTION 5.I.]
   - B. ENVIRONMENTAL INSPECTOR HAS THE AUTHORITY TO ADD AND/OR MODIFY EROSION/SEDIMENTATION CONTROLS ON SITE TO KEEP PROJECT IN COMPLIANCE WITH THE CITY OF AUSTIN RULES AND REGULATIONS. [LDC 25-8-182]
   - C. CONTRACTOR SHALL UTILIZE DUST CONTROL MEASURES DURING SITE CONSTRUCTION SUCH AS IRRIGATION TRUCKS AND MULCHING AS PER ECM 1.4.5(A), OR AS DIRECTED BY THE ENVIRONMENTAL INSPECTOR.
   - D. THE CONTRACTOR WILL CLEAN UP SPOILS THAT MIGRATE ONTO THE ROADS A MINIMUM OF ONCE DAILY. [ECM 1.4.4.D.4]
   - E. ALL SPOILS ARE TO BE PLACED BACK IN TRENCH EVERY NIGHT; OR IF SPOILS PILES ARE TO REMAIN OVERNIGHT, SPOILS MUST BE PLACED ON THE UPHILL SIDE OF TRENCH WITHIN THE LOC.
   - F. WHEN INSTALLING MULCH, IF DAYLIGHT CAN BE SEEN UNDER MULCH SOCK DUE TO TOPOGRAPHIC CHANGES, ADD ADDITIONAL ROWS OF MULCH SOCK TO CLOSE GAPS.
   - G. ONLY RUBBER-TIRED EQUIPMENT IS ALLOWED WITHIN THE CWQZ AND FLOODPLAIN. NO TRACK EQUIPMENT IS ALLOWED.
   - H. ALL EQUIPMENT AND SPOILS ARE TO BE REMOVED FROM THE CREEK, THE CWQZ, AND 100-YEAR FLOODPLAIN NIGHTLY.

THIS CONFORMED DOCUMENT IS RELEASED FOR THE CONVENIENCE OF THE CONTRACTOR UNDER THE AUTHORITY OF:

CASEY G. WAUTERS, P.E. TX LIC NO. 93889 — 11-01-22 DATE

SEE DISCLAIMER FOR LIMITATIONS OF USE.

CONTRACT DOCUMENTS DATED JUNE 10, 2022, AS PART OF THE BIDDING DOCUMENTS (DRAWINGS AND SPECIFICATIONS) AND SUBSEQUENTLY ISSUED ADDENDA HAVE BEEN MERGED INTO ONE CONFORMING SET OF DOCUMENTS FOR THE CONVENIENCE OF THE CONTRACTOR. IF INCONSISTENCIES OR AMBIGUITIES BETWEEN "CONFORMED" DOCUMENTS AND CONTRACT DOCUMENTS ARE FOUND, THE CONTRACT DOCUMENTS SHALL GOVERN.

REV	DATE	BY	DESCRIPTION
			CONFORMED DOCUMENTS

DESIGNED CW | DRAWN AW | CHECKED SGE | DATE FEBRUARY 2022

** ORIGINAL SEALED BY CASEY G. WAUTERS, P.E. 2/28/2022 TX PE 93889 **

AECOM TECHNICAL SERVICES INC. 13640 BRIARWICK DRIVE, SUITE 200 AUSTIN, TEXAS 78729 WWW.AECOM.COM TBPE REG. NO. F-3580

TBPE No. F-882

CITY OF AUSTIN

WILD HORSE RANCH WWTP EXPANSION

CIVIL

EX. TOPO, E / S CONTROL &TREE PROTECTION WATERLINE PLAN - (SHEET 2 OF 2)

VERIFY SCALES — BAR IS ONE INCH ON ORIGINAL DRAWING (0 — 1") — IF NOT ONE INCH ON THIS SHEET, ADJUST SCALES ACCORDINGLY

JOB NO. 10976A.10 | DRAWING NO. 00GC10 | SHEET NO. 230 OF 464

LAST SAVED BY: dseivert

PROJECT NO. 9585A10 FILE NAME: 9585A10_SheetSeed.dgn

TREE LIST (WWTP SITE)		
TAG No.	DESCRIPTION	ACTION
5630	8" ELM	OLOC
5631	8" ELM	PROTECT
5632	11" ELM	PROTECT
5633	6" ELM	PROTECT
5634	11" ELM	PROTECT
5635	8" ELM	PROTECT
5636	13" ASH	PROTECT
5637	6" ELM	PROTECT
5638	4" ELM	PROTECT
5639	4" ELM	PROTECT
5640	11" ELM	PROTECT
5641	19" ELM	REMOVE
5642	11" ELM	REMOVE
5643	8" ELM	REMOVE
5644	11" ELM	REMOVE
5645	10" ELM	REMOVE
5646	11" ELM	REMOVE
5647	8" ELM	REMOVE
5648	7" ELM	REMOVE
5649	6" ELM	REMOVE
5650	15" ELM	REMOVE
5651	13" ELM	REMOVE
5652	8" ELM	PROTECT
5653	7" ELM	PROTECT
5654	5" CHINA BERRY	PROTECT
5655	8" ELM	PROTECT
5656	9" ELM	PROTECT
5657	6" ELM	PROTECT
5658	10" ELM	PROTECT
5659	7" ELM	PROTECT
5660	12" ELM	OLOC
5663	6" HACKBERRY	REMOVE
5664	15" ELM	REMOVE
5665	15" ELM	REMOVE
5666	8" ELM	REMOVE
5667	7" ELM	REMOVE
5668	13" ELM	REMOVE
5669	9" ELM	REMOVE
5670	16" ELM	REMOVE
5671	8" ELM	REMOVE
5672	7" ELM	REMOVE
5673	16" ELM	REMOVE
5674	16" ELM	PROTECT
10000	8" ELM	OLOC
10001	8" ELM	OLOC
10002	8" ELM	OLOC
10003	13" MESQUITE	OLOC
10004	10" ELM	OLOC
10005	12" ELM	OLOC
10006	8" ELM	OLOC

TOTAL APP F TREE INCHES SURVEYED: 479
HERITAGE TREE INCHES SURVEYED: 0
NON APP F TREE INCHES SURVEYED: 0
INVASIVE TREE INCHES SURVEYED: 5
TOTAL APP F TREE INCHES REMOVED: 239
INVASIVE TREE INCHES REMOVED: 0
TOTAL INCHES TO BE MITIGATED: 112.5

TREE LIST (UTILITY EASEMENT)		
TAG No.	DESCRIPTION	ACTION
465	14" ELM	REMOVE
466	9" ELM	OLOC
467	12" MESQUITE	OLOC
468	9" ELM	PROTECT
469	11" ELM	PROTECT
470	8" ELM	REMOVE
471	8" ELM	PROTECT
472	8" ELM	REMOVE
473	11" ELM	OLOC
474	12" ELM	OLOC
475	9" MESQUITE	OLOC
476	8" ELM	OLOC
477	9" ELM	OLOC
478	13" MESQUITE	REMOVE
479	13" ELM	REMOVE
480	10" MESQUITE	REMOVE
481	9" MESQUITE	REMOVE
482	8" ELM	REMOVE
483	15" ELM	PROTECT
484	9" ELM	OLOC
485	10" ELM	OLOC
486	8" ELM	REMOVE
487	8" ELM	PROTECT
488	8" ELM	PROTECT
489	9" ELM 6"5"	OLOC
490	9" ELM	OLOC
491	9" ELM	PROTECT
492	8" ELM	REMOVE
493	12" ELM	OLOC
494	8" ELM	PROTECT
495	9" ELM	REMOVE
496	17" ELM 10"8"6"	REMOVE
497	10" ELM	OLOC
498	15" ELM 9"4"4"4"	PROTECT
499	10" MESQUITE	OLOC
500	14" ELM	REMOVE
501	10" MESQUITE	REMOVE
502	10" ELM	OLOC
503	15" ELM	PROTECT
504	20" MESQUITE	PROTECT
505	10" MESQUITE	REMOVE
507	10" MESQUITE 6"4"3"	REMOVE
508	9" ELM 3"3"3"2"2"	PROTECT
509	10" MESQUITE 7"5"	OLOC
510	9" MESQUITE 6"5"3"	OLOC
511	8" ELM	OLOC
512	11" ELM	OLOC
513	10" ELM 6"5"3"	OLOC
514	17" MESQUITE 12"10"	PROTECT
515	12" MESQUITE 9"6"	REMOVE
516	9" HACKBERRY	PROTECT
517	17" OSAGE ORANGE 6"6"5"5"4"	PROTECT
518	12" ELM 4-3"2"2"	REMOVE
519	9" MESQUITE 6"6"	REMOVE
520	8" HACKBERRY	REMOVE
521	10" MESQUITE 8"4"	REMOVE
522	10" MESQUITE 7"7"	REMOVE
523	10" MESQUITE	REMOVE
524	8" ELM	REMOVE
525	8" MESQUITE	PROTECT
526	21" MESQUITE 11"8"6"5"	REMOVE
527	8" MESQUITE	OLOC
528	17" MESQUITE 9"8"8"	PROTECT
529	21" MESQUITE 11"9"9"	PROTECT
530	11" MESQUITE	PROTECT
531	20" MESQUITE 10"8"7"6"	PROTECT
532	20" MESQUITE 12"11"	PROTECT
533	10" MESQUITE 4"4"3"2"2"	REMOVE
534	10" MESQUITE 3"3"2"2"2"2"	REMOVE
535	22" MESQUITE 12"11"7"4"	OLOC

TOTAL APP F TREE INCHES SURVEYED: 774
HERITAGE TREE INCHES SURVEYED: 0
NON APP F TREE INCHES SURVEYED: 17
INVASIVE TREE INCHES SURVEYED: 0
TOTAL APP F TREE INCHES REMOVED: 284
NON APP F TREE INCHES REMOVED: 0
TOTAL INCHES TO BE MITIGATED: 152.5

NOTES:

1. TREE CROWN DIAMETERS SHOWN ARE CALCULATED USING CITY OF AUSTIN FORMULA OF 1" OF TRUNK DIAMETER (D.B.H.) = 1' OF CROWN RADIUS.
2. TREES LISTED OLOC ARE DESIGNATED OUTSIDE THE LIMITS OF CONSTRUCTION.
3. UNLESS SHOWN OTHERWISE, PROVIDE PROTECTION PER DETAILS ON 00GC06 FOR ALL TREES SHOWN TO BE PROTECTED.
4. REMOVED TREES SHALL BE MULCHED ON SITE AND THE MULCH USED FOR EROSION CONTROL.
1. 5. TREE MITIGATION FEE HAS BEEN PAID BY OWNER.

TOTAL MITIGATION:
INCHES OWED TO UFRF : 265
REPLACEMENT VALUE: $ 200 / INCH
PAYMENT OWED TO UFRF : $ 53,000

THIS CONFORMED DOCUMENT IS RELEASED FOR THE CONVENIENCE OF THE CONTRACTOR UNDER THE AUTHORITY OF:

CASEY G. WAUTERS, P.E. 11-01-22
TX LIC NO. 93889 DATE

SEE DISCLAIMER FOR LIMITATIONS OF USE.

CONTRACT DOCUMENTS DATED JUNE 10, 2022, AS PART OF THE BIDDING DOCUMENTS (DRAWINGS AND SPECIFICATIONS) AND SUBSEQUENTLY ISSUED ADDENDA HAVE BEEN MERGED INTO ONE CONFORMING SET OF DOCUMENTS FOR THE CONVENIENCE OF THE CONTRACTOR. IF INCONSISTENCIES OR AMBIGUITIES BETWEEN "CONFORMED" DOCUMENTS AND CONTRACT DOCUMENTS ARE FOUND, THE CONTRACT DOCUMENTS SHALL GOVERN.

REV	DATE	BY	DESCRIPTION
1	9/7/22	CW	ADDENDUM No. 5

CONFORMED DOCUMENTS

DESIGNED CW
DRAWN AW
CHECKED SGE
DATE SEPTEMBER 2022

** ORIGINAL SEALED BY CASEY G. WAUTERS, P.E. 9/7/2022 TX PE 93889 **

AECOM TECHNICAL SERVICES INC.
13640 BRIARWICK DRIVE, SUITE 200
AUSTIN, TEXAS 78729
WWW.AECOM.COM
TBPE REG. NO. F-3580

carollo
TBPE No. F-882

CITY OF AUSTIN

CITY OF AUSTIN
WILD HORSE RANCH WWTP EXPANSION
CIVIL
TREE INVENTORY

VERIFY SCALES
BAR IS ONE INCH ON ORIGINAL DRAWING
0 1"
IF NOT ONE INCH ON THIS SHEET, ADJUST SCALES ACCORDINGLY

JOB NO. 10976A.10
DRAWING NO. 00GC11
SHEET NO. 231 OF 464

LAST SAVED BY:

PROJECT NO. 9585A10 FILE NAME:

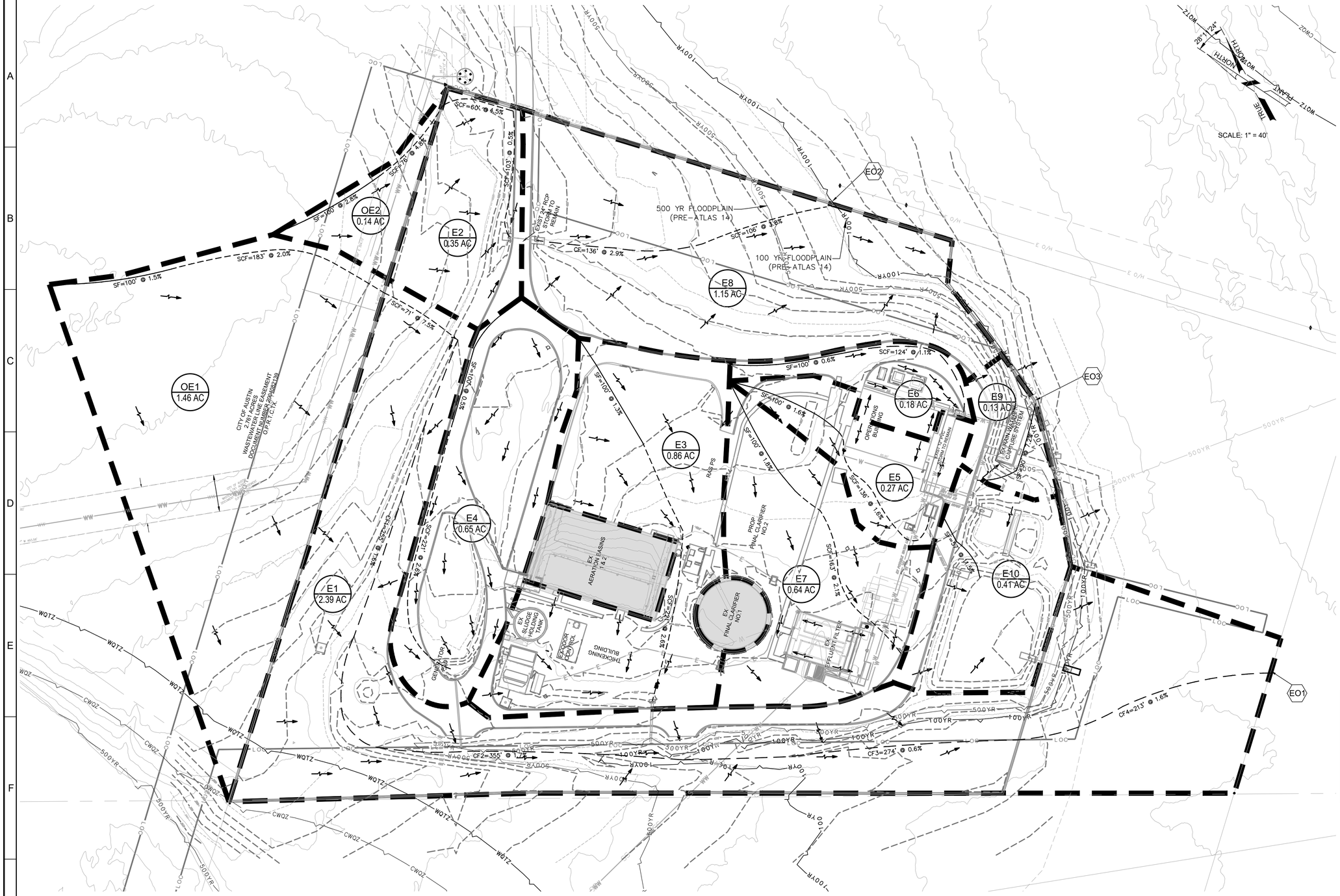

LEGEND

- SF — SHEET FLOW
- SCF — SHALLOW CONCENTRATED FLOW
- CF — CHANNEL FLOW
- EXISTING MINOR CONTOURS
- EXISTING MAJOR CONTOURS
- PROPOSED CONTOURS
- 100YR — 100 YEAR FLOODPLAIN
- 500YR — 500 YEAR FLOODPLAIN
- CWQZ — CRITICAL WATER QUALITY ZONE
- DRAINAGE EASEMENT
- DRAINAGE AREA
- PROPOSED STORM DRAIN LINE
- FLOW DIRECTION
- O1 — OUTFALL / DESIGN POINTS
- DRAINAGE EXCLUSION
- DA1 / 0.00 AC — DRAINAGE AREA NAME / ACREAGE

NOTES:

1. CONSISTENT WITH THE ORIGINAL SITE PLAN CALCULATIONS, THE OPEN TOP AERATION BASINS AND FINAL CLARIFIERS HAVE NOT BEEN INCLUDED IN THE RUNOFF CALCULATIONS FOR THE SITE.
2. CONTOUR DATA SHOWN IS A COMPILATION OF ON-SITE SURVEY AND LIDAR INFORMATION.

THIS CONFORMED DOCUMENT IS RELEASED FOR THE CONVENIENCE OF THE CONTRACTOR UNDER THE AUTHORITY OF:

Stephanie D Blew — 11-01-22

STEPHANIE D. BLEW, P.E. — DATE
TX LIC NO. 92682

SEE DISCLAIMER FOR LIMITATIONS OF USE.

CONTRACT DOCUMENTS DATED JUNE 10, 2022, AS PART OF THE BIDDING DOCUMENTS (DRAWINGS AND SPECIFICATIONS) AND SUBSEQUENTLY ISSUED ADDENDA HAVE BEEN MERGED INTO ONE CONFORMING SET OF DOCUMENTS FOR THE CONVENIENCE OF THE CONTRACTOR. IF INCONSISTENCIES OR AMBIGUITIES BETWEEN "CONFORMED" DOCUMENTS AND CONTRACT DOCUMENTS ARE FOUND, THE CONTRACT DOCUMENTS SHALL GOVERN.

REV	DATE	BY	DESCRIPTION
			CONFORMED DOCUMENTS

DESIGNED SDB | DRAWN JF | CHECKED AR | DATE NOVEMBER 2022

ORIGINAL SEALED BY STEPHANIE D. BLEW 05-13-22 TX PE 92682

CAS CONSULTING & SERVICES, INC.
CIVIL ENGINEERING | PROGRAM MANAGEMENT | CONSTRUCTION MANAGEMENT
7908 Cameron Road | Austin, TX 78754 | REG. NO. F-003572
Main: 512.836.2388 | Fax: 512.836.4015

carollo® TBPELS No. F-882

CITY OF AUSTIN

CITY OF AUSTIN
WILD HORSE RANCH WWTP EXPANSION
CIVIL
EXISTING DRAINAGE MAP

VERIFY SCALES
BAR IS ONE INCH ON ORIGINAL DRAWING
0 — 1"
IF NOT ONE INCH ON THIS SHEET, ADJUST SCALES ACCORDINGLY

JOB NO. 10976A.00
DRAWING NO. 00C01
SHEET NO. 232 OF 464

LAST SAVED BY: ALINA.ALEMAN

PROJECT NO. 9585A10 FILE NAME: \\CAS-DATASERVER\WATER\!ACTIVE PROJECTS\COA WILD HORSE (NE WWTP) CAROLLO\3.0 CAD\10976A10_DRNG01.DWG

SP-2022-1025C

EXISTING TIME OF CONCENTRATION CALCULATIONS

Subbasin		OE1	E1				OE2	E2	E3		E4	E5		E6	E7		E8	E9	E10	
Sheet Flow [COA DCM Eq 2.-4]																				
Manning's Roughness	n	0.24					0.24		0.016	0.24	0.016	0.016	0.24	0.016	0.016	0.24		0.24	0.016	0.24
Sheet Flow Distance (ft)	L	100					100		27	73	100	22	78	100	19	81		90.18	20.5	36.2
Start Elev.	E1	498.5					496.5		488.3	488.0	488.3	487.3	487.0	487	487.3	487		484.5	484.5	483.5
End Elev.	E2	497.0					493.7		488.0	487.0	487.8	487.0	485.7	486.4	487	485.5		478	483.5	478
Land Slope (ft/ft)	S	0.015					0.028		0.013	0.013	0.005	0.014	0.017	0.006	0.016	0.019		0.072	0.049	0.152
Travel Time (min)	T	14.2					11.1		0.6	11.7	2.5	0.5	11.2	2.3	0.4	11.0		7.0	0.3	2.5
Total Travel Time (min)	T_Sheet	14.2	0.0				11.1	0.0	12.3		2.5	11.7		2.3	11.5		0.0	7.0	2.8	
Shallow Concentrated Flow [COA DCM Eq. 2-5 (unpaved), Eq 2-6 (paved)]																				
Surface		**U**	**U**				**U**	**U**	**U**		**P**	**U**		**P**	**U**		**U**			
Length (ft)	L	183	71				76	60	219		221	137		124	163		106			
Start Elev.	E1	497	493.3				493.7	490	487.0		487.8	485.7		486.4	485.5		484			
End Elev.	E2	493.3	488				490	487.3	481		482	483.5		485	482		480			
Slope	S	0.020	0.075				0.048	0.045	0.027		0.026	0.016		0.011	0.021		0.038			
Time (min)	T	1.3	0.3				0.4	0.3	1.4		1.1	1.1		1.0	1.2		0.6			
Total Travel Time (min)	T_Shallow	1.3	0.3				0.4	0.3	1.4		1.1	1.1		1.0	1.2		0.6	0.0	0.0	
Channel Flow [COA DCM Eq 2-8]			CF1	CF2	CF3	CF4														
Length (ft)	L		255	355	274	213		103									136			
Elevation (start)	E1		488	484	478	476.3		487.3									488			
Elevation (end)	E2		484	478	476.3	473		476									484			
Slope (ft/ft)	S		0.016	0.017	0.006	0.016		0.005									0.029			
Velocity (fps)	V		2.48	5.74	1.82	2.19		3.286									3.60			
Time (min)	T		1.7	1.0	2.5	1.6		0.5									0.6			
Total Travel Time (min)	T_Channel	0.0	6.9				0.0	0.5	0.0		0.0	0.0		0.0	0.0	0.0	0.6	0.0	0.0	
Time of Concentration (min)	Tc	**15.5**	**7.1**				**11.4**	**5.0**	**13.7**		**5.0**	**12.8**		**5.0**	**12.6**		**5.0**	**7.0**	**5.0**	

EXISTING COMPOSITE C VALUES AND RUNOFF CALCULATIONS

DRAINAGE AREA	AREA (SF)	AREA (AC)	T_C (min)	IC (sf)	IC (AC)	IC (%)	C_{02}	C_{10}	C_{25}	C_{100}	i_{02} (in/hr)	i_{10} (in/hr)	i_{25} (in/hr)	i_{100} (in/hr)	Q_2 (cfs)	Q_{10} (cfs)	Q_{25} (cfs)	Q_{100} (cfs)
OE1	63483	1.46	15.5	0	0.000	0.0	0.21	0.25	0.29	0.36	4.17	6.21	7.64	10.06	1.27	2.26	3.23	5.28
E1	104150	2.39	7.1	6998	0.161	6.7	0.24	0.29	0.33	0.40	5.66	8.48	10.43	13.73	3.31	5.83	8.14	13.12
OE2	6234	0.14	11.4	0	0.000	0.0	0.21	0.25	0.29	0.36	4.76	7.11	8.74	11.50	0.14	0.25	0.36	0.59
E2	15135	0.35	5.0	1593	0.037	10.5	0.26	0.31	0.35	0.42	6.27	9.43	11.62	15.32	0.58	1.01	1.40	2.25
E3	37314	0.86	13.7	7670	0.176	20.6	0.32	0.37	0.40	0.48	4.42	6.59	8.10	10.66	1.20	2.06	2.78	4.39
E4	28259	0.65	5.0	18674	0.429	66.1	0.55	0.62	0.65	0.75	6.27	9.43	11.62	15.32	2.25	3.79	4.88	7.45
E5	11955	0.27	12.8	4827	0.111	40.4	0.42	0.48	0.51	0.60	4.55	6.78	8.34	10.97	0.52	0.89	1.16	1.80
E6	7659	0.18	5.0	6378	0.146	83.3	0.64	0.72	0.74	0.85	6.27	9.43	11.62	15.32	0.71	1.19	1.51	2.29
E7	27810	0.64	12.6	4851	0.111	17.4	0.30	0.35	0.38	0.46	4.57	6.82	8.39	11.04	0.88	1.51	2.06	3.26
E8	50103	1.15	5.0	1457	0.033	2.9	0.23	0.27	0.31	0.38	6.27	9.43	11.62	15.32	1.62	2.89	4.09	6.64
E9	5769	0.13	7.0	1791	0.041	31.0	0.37	0.42	0.46	0.54	5.70	8.54	10.50	13.83	0.28	0.48	0.64	0.99
E10	17987	0.41	5.0	3256	0.075	18.1	0.30	0.35	0.39	0.47	6.27	9.43	11.62	15.32	0.79	1.37	1.86	2.95
OPEN TOP	10697	0.25																
TOTAL	386554	8.87		57494	1.32	14.9												

NOTES:

1. CALCULATIONS PRESENTED HERE REFLECT THE EXISTING DEVELOPMENT CURRENTLY AT THE SITE. THESE CALCULATIONS ARE PRESENT FOR INFORMATION ONLY.

THIS CONFORMED DOCUMENT IS RELEASED FOR THE CONVENIENCE OF THE CONTRACTOR UNDER THE AUTHORITY OF:

Stephanie D Blew 11-01-22

STEPHANIE D. BLEW, P.E. DATE
TX LIC NO. 92682

SEE DISCLAIMER FOR LIMITATIONS OF USE.

CONTRACT DOCUMENTS DATED JUNE 10, 2022, AS PART OF THE BIDDING DOCUMENTS (DRAWINGS AND SPECIFICATIONS) AND SUBSEQUENTLY ISSUED ADDENDA HAVE BEEN MERGED INTO ONE CONFORMING SET OF DOCUMENTS FOR THE CONVENIENCE OF THE CONTRACTOR. IF INCONSISTENCIES OR AMBIGUITIES BETWEEN "CONFORMED" DOCUMENTS AND CONTRACT DOCUMENTS ARE FOUND, THE CONTRACT DOCUMENTS SHALL GOVERN.

REV	DATE	BY	DESCRIPTION
			CONFORMED DOCUMENTS

DESIGNED SDB
DRAWN JF
CHECKED AR
DATE NOVEMBER 2022

** ORIGINAL SEALED BY STEPHANIE D. BLEW 05-13-22 TX PE 92682 **

CAS CONSULTING & SERVICES, INC.
CIVIL ENGINEERING | PROGRAM MANAGEMENT | CONSTRUCTION MANAGEMENT
7908 Cameron Road | Austin, TX 78754 | REG. NO. F-003572
Main: 512.836.2388 | Fax: 512.836.4153

carollo® TBPELS No. F-882

CITY OF AUSTIN

CITY OF AUSTIN
WILD HORSE RANCH WWTP EXPANSION
CIVIL
EXISTING DRAINAGE CALCULATIONS

VERIFY SCALES
BAR IS ONE INCH ON ORIGINAL DRAWING
0 1"
IF NOT ONE INCH ON THIS SHEET, ADJUST SCALES ACCORDINGLY

JOB NO. 10976A.00
DRAWING NO. 00C02
SHEET NO. 233 OF 464

LAST SAVED BY: ALINA.ALEMAN

PROJECT NO. 9585A10 FILE NAME: \\CAS-DATASERVER\WATER\!ACTIVE PROJECTS\COA WILD HORSE (NE WWTP) CAROLLO\3.0 CAD\10976A10_DRNGC01.DWG

SP-2022-1025C

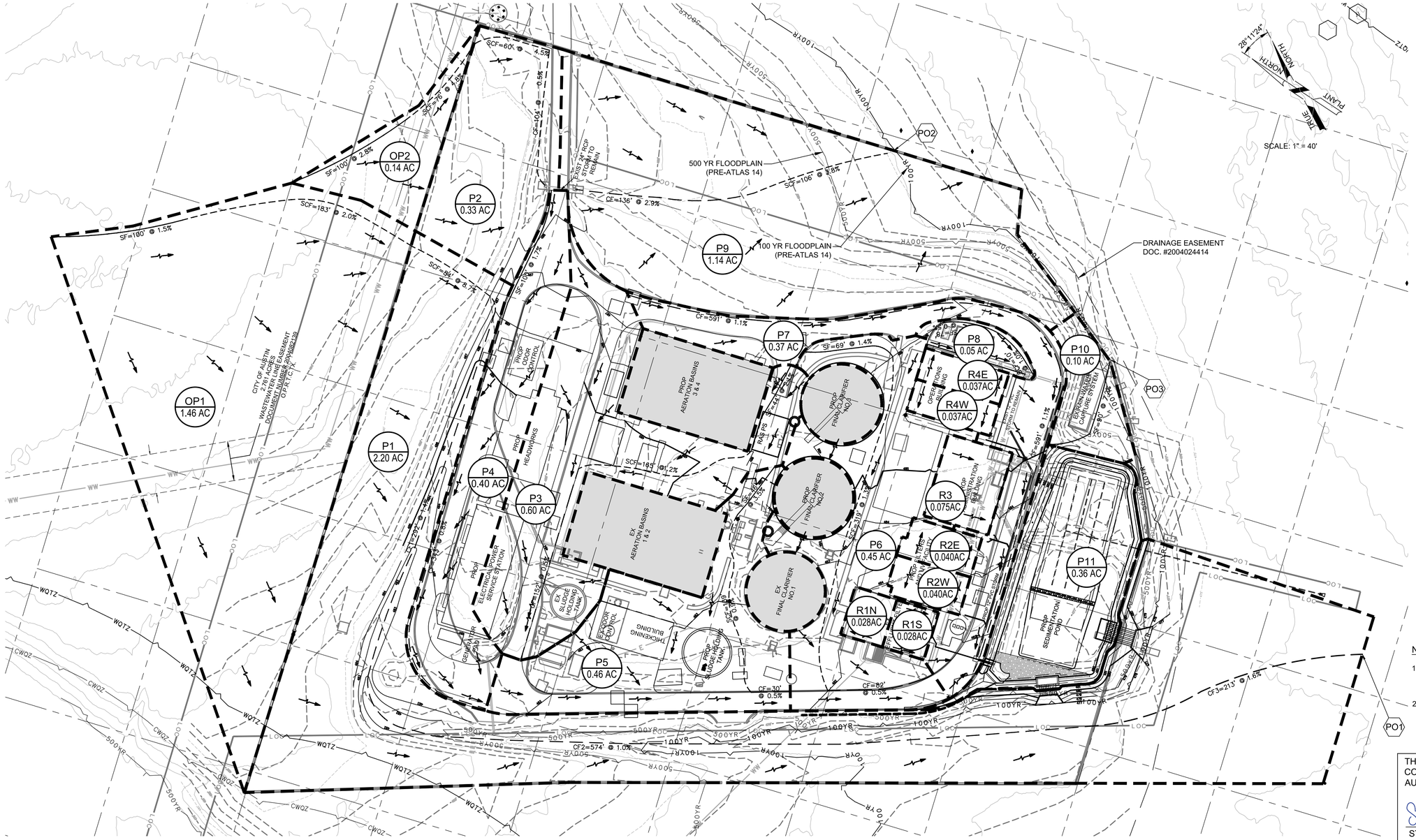

NOTES:

1. THE OPEN TOP AERATION BASINS AND FINAL CLARIFIERS HAVE NOT BEEN INCLUDED IN THE RUNOFF CALCULATIONS FOR THE SITE.
2. CONTOUR DATA SHOWN IS A COMPILATION OF ON-SITE SURVEY AND LIDAR INFORMATION.

THIS CONFORMED DOCUMENT IS RELEASED FOR THE CONVENIENCE OF THE CONTRACTOR UNDER THE AUTHORITY OF:

Stephanie D Blew 11-01-22

STEPHANIE D. BLEW, P.E. DATE
TX LIC NO. 92682

SEE DISCLAIMER FOR LIMITATIONS OF USE.

CONTRACT DOCUMENTS DATED JUNE 10, 2022, AS PART OF THE BIDDING DOCUMENTS (DRAWINGS AND SPECIFICATIONS) AND SUBSEQUENTLY ISSUED ADDENDA HAVE BEEN MERGED INTO ONE CONFORMING SET OF DOCUMENTS FOR THE CONVENIENCE OF THE CONTRACTOR. IF INCONSISTENCIES OR AMBIGUITIES BETWEEN "CONFORMED" DOCUMENTS AND CONTRACT DOCUMENTS ARE FOUND, THE CONTRACT DOCUMENTS SHALL GOVERN.

REV	DATE	BY	DESCRIPTION
			CONFORMED DOCUMENTS

DESIGNED SDB
DRAWN JF
CHECKED AR
DATE NOVEMBER 2022

** ORIGINAL SEALED BY STEPHANIE D. BLEW 05-13-22 TX PE 92682 **

CAS CONSULTING & SERVICES, INC.
CIVIL ENGINEERING | PROGRAM MANAGEMENT | CONSTRUCTION MANAGEMENT
7908 Cameron Road | Austin, TX 78754 | REG. NO. F-003572
Main: 512.836.2388 | Fax: 512.836.4515

carollo
TBPELS No. F-882

CITY OF AUSTIN
FOUNDED 1839
CITY OF AUSTIN

CITY OF AUSTIN
WILD HORSE RANCH WWTP EXPANSION
CIVIL
PROPOSED DRAINAGE MAP

VERIFY SCALES
BAR IS ONE INCH ON ORIGINAL DRAWING
0 1"
IF NOT ONE INCH ON THIS SHEET, ADJUST SCALES ACCORDINGLY

JOB NO. 10976A.00
DRAWING NO. 00C03
SHEET NO. 234 OF 464

LAST SAVED BY: ALINA.ALEMAN

PROJECT NO. 9585A10 FILE NAME: \\CAS-DATASERVER\WATER\ACTIVE PROJECTS\COA WILD HORSE (NE WWTP) CAROLLO\3.0 CAD\10976A10_DRNG02.DWG

SP-2022-1025C

HYDRAULIC GRADELINE COMPUTATIONS FOR STORM DRAINS - 25 YR.

"MANHOLE OR INLET" FROM DESIGN POINT	TO DESIGN POINT	CONDUIT LENGTH BETWEEN MANHOLE OR INLET	DRAINAGE AREA INCREMENT AREA NO.	AREA	TOTAL AREA	RUNOFF COEFFICIENT "C"	INCREMENTAL "CA"	TOTAL "CA"	TIME OF CONCENTRATION INLET/ SYSTEM TIME	FLOW TIME IN PIPE	TOTAL TIME	DESIGN FREQUENCY	INTENSITY	DISCHARGE	DESIGN SLOPE	CONDUIT SHAPE	SLOPE OF FRICTIONAL GRADIENT	"HYDRAULIC GRADIENT ELEVATIONS" UP STREAM	DOWN STREAM	UP STREAM VELOCITY	DOWN STREAM VELOCITY	DOWN STREAM VELOCITY HEAD	UP STREAM VELOCITY HEAD	HEADLOSS COEFFICIENT	HYDRAULIC LOSS AT DOWN STREAM JUNCTION	HGL AT UP STREAM DESIGN POINT	CONDUIT INVERT ELEVATIONS UP STREAM	DOWN STREAM
--	--	FT.	--	ACRES	ACRES	CONSTANT	ACRE	ACRES	MIN	MIN	MIN	--	IN/HR	CFS	%	DIAMETER	%	FT MSL	FT MSL	FT/S	FT/S	FT	FT	CONSTANT	FT	FT MSL	FT MSL	FT MSL
1	2	3	4	5	6	7	8	9	10	11	12	13	14	15	16	17	18	19	20	21	22	23	24	25	26	27	28	29
SD TRUNK LINE																												
CB-5	T-5	44.2	P8	0.05	0.09	0.490	0.025	0.058	5.02	0.24	5.25	25	11.61	0.68	0.50%	12 " RCP	0.10%	481.39	481.4	2.52	1.36	0.03	0.10	HEC-22 ENERGY	0.01	481.44	481.02	480.80
T-5	T-4	21.2	--	--	0.09	--	--	0.058	5.25	0.13	5.38	25	11.46	0.67	0.40%	12 " RCP	0.00%	481.40	481.39	1.36	1.15	0.02	0.03	0.235	0.01	481.4	480.80	480.70
T-4	T-3	13.2	--	--	0.13	--	--	0.091	5.38	0.06	5.45	25	11.38	1.04	0.40%	12 " RCP	0.10%	481.39	481.38	1.81	1.69	0.04	0.05	HEC-22 MINOR	0.01	481.39	480.70	480.65
T-3	T-2	58.1	--	--	0.13	--	--	0.091	5.45	0.29	5.74	25	11.35	1.04	0.40%	12 " RCP	0.10%	481.37	481.35	1.72	1.34	0.03	0.05	0.235	0.09	481.38	480.65	480.40
T-2	T-1	62.8	--	--	0.24	--	--	0.189	5.74	0.27	6.02	25	11.17	2.13	0.40%	12 " RCP	0.20%	481.26	481.14	2.95	2.71	0.11	0.13	HEC-22 MINOR	0.07	481.35	480.40	480.13
T-1	MH-1	27.5	--	--	0.30	--	--	0.247	6.02	0.11	6.13	25	11.02	2.74	0.40%	12 " RCP	0.40%	481.06	480.97	3.60	3.56	0.20	0.20	HEC-22 MINOR	0.03	481.14	480.13	480.02
MH-1	O-1	12.5	--	--	0.33	--	--	0.272	6.13	0.08	6.21	25	10.95	3.00	0.10%	18 " RCP	0.10%	481.01	481.00	1.70	1.70	0.04	0.05	HEC-22 ENERGY	--	481.04	479.52	479.50
SD LATERAL CO-8																												
CB-1	MH-1	26.3	R1-S	0.03	0.03	0.88	0.025	0.025	5.00	0.23	5.23	25	11.62	0.29	0.40%	6 " RCP	0.20%	481.11	481.06	1.50	1.50	0.04	0.04	HEC-22 ENERGY	0.03	481.14	480.07	479.97
SD LATERAL CO-9																												
CB-2	T-1	26	R1-N/R2-W	0.07	0.07	0.88	0.058	0.058	5.00	0.11	5.11	25	11.62	0.68	0.40%	8 " RCP	0.20%	481.17	481.14	1.93	1.93	0.06	0.06	HEC-22 ENERGY	0.07	481.22	480.32	480.26
SD LATERAL CO-10																												
CB-3	T-2	25.7	R2-E/R3	0.11	0.11	0.88	0.099	0.099	5.00	0.08	5.08	25	11.62	1.16	0.40%	10 " RCP	0.20%	481.38	481.35	2.12	2.12	0.07	0.07	HEC-22 ENERGY	0.09	481.42	480.51	480.46
SD LATERAL CO-11																												
CB-4	T-4	24.7	R4-W	0.04	0.04	0.88	0.033	0.033	5.00	0.10	5.10	25	11.62	0.39	1.50%	6 " RCP	1.20%	481.63	481.39	2.95	2.09	0.07	0.14	HEC-22 ENERGY	0.01	481.97	481.31	480.95
SD LATERAL CO-12																												
CB-6	CB-5	9.2	R4-E	0.04	0.04	0.88	0.033	0.033	5.00	0.02	5.02	25	11.62	0.39	2.30%	6 " RCP	1.10%	482.17	481.94	2.95	4.34	0.29	0.14	HEC-22 ENERGY	0.05	482.45	481.85	481.71

HYDRAULIC GRADELINE COMPUTATIONS FOR STORM DRAINS - 100 YR.

"MANHOLE OR INLET" FROM DESIGN POINT	TO DESIGN POINT	CONDUIT LENGTH BETWEEN MANHOLE	DRAINAGE AREA INCREMENT AREA NO.	AREA	TOTAL AREA	RUNOFF COEFFICIENT "C"	INCREMENTAL "CA"	TOTAL "CA"	TIME OF CONCENTRATION INLET/ SYSTEM TIME	FLOW TIME IN PIPE	TOTAL TIME	DESIGN FREQUENCY	INTENSITY	DISCHARGE	DESIGN SLOPE	CONDUIT SHAPE	SLOPE OF FRICTIONAL GRADIENT	"HYDRAULIC GRADIENT ELEVATIONS" UP STREAM	DOWN STREAM	UP STREAM VELOCITY	DOWN STREAM VELOCITY	DOWN STREAM VELOCITY HEAD	UP STREAM VELOCITY HEAD	HEADLOSS COEFFICIENT	HYDRAULIC LOSS AT DOWN STREAM	HGL AT UP STREAM DESIGN POINT	CONDUIT INVERT ELEVATIONS UP STREAM	DOWN STREAM
--	--	FT.	--	ACRES	ACRES	CONSTANT	ACRE	ACRES	MIN	MIN	MIN	--	IN/HR	CFS	%	DIAMETER	%	FT MSL	FT MSL	FT/S	FT/S	FT	FT	CONSTANT	FT	FT MSL	FT MSL	FT MSL
1	2	3	4	5	6	7	8	9	10	11	12	13	14	15	16	17	18	19	20	21	22	23	24	25	26	27	28	29
SD TRUNK LINE																												
CB-5	T-5	44.2	P8	0.05	0.09	0.580	0.029	0.066	5.02	0.19	5.58	100	15.30	1.01	0.50%	12 " RCP	0.10%	482.16	482.14	1.29	1.29	0.03	0.03	HEC-22 ENERGY	0.01	482.18	481.02	480.80
T-5	T-4	21.2	--	--	0.09	--	--	0.066	5.58	0.11	5.88	100	14.84	0.98	0.40%	12 " RCP	0.10%	482.13	482.12	1.25	1.25	0.02	0.02	0.235	0.01	482.14	480.80	480.70
T-4	T-3	13.2	--	--	0.13	--	--	0.102	5.88	0.06	5.99	100	14.61	1.5	0.40%	12 " RCP	0.10%	482.11	482.09	1.91	1.91	0.06	0.06	HEC-22 MINOR	0.01	482.12	480.70	480.65
T-3	T-2	58.1	--	--	0.13	--	--	0.102	5.99	0.27	6.49	100	14.53	1.49	0.40%	12 " RCP	0.10%	482.08	482.01	1.90	1.90	0.06	0.06	0.235	0.17	482.09	480.65	480.40
T-2	T-1	62.8	--	--	0.24	--	--	0.211	6.49	0.30	6.77	100	14.16	3.01	0.40%	12 " RCP	0.50%	481.83	481.51	3.83	3.83	0.23	0.23	HEC-22 MINOR	0.15	482.01	480.40	480.13
T-1	MH-1	27.5	--	--	0.30	--	--	0.274	6.77	0.13	6.86	100	13.97	3.86	0.40%	12 " RCP	0.80%	481.37	481.14	4.92	4.92	0.38	0.38	HEC-22 MINOR	0.06	481.51	480.13	480.02
MH-1	O-1	12.5	--	--	0.33	--	--	0.302	6.86	0.09	6.96	100	13.91	4.23	0.10%	18 " RCP	0.10%	481.22	481.20	2.40	2.40	0.09	0.09	HEC-22 ENERGY	--	481.27	479.52	479.50
SD LATERAL CO-8																												
CB-1	MH-1	26.3	R1-S	0.03	0.03	0.97	0.028	0.028	5.00	0.23	5.23	100	15.32	0.43	0.40%	6 " RCP	0.40%	481.43	481.32	2.18	2.18	0.07	0.07	HEC-22 ENERGY	0.06	481.48	480.07	479.97
SD LATERAL CO-9																												
CB-2	T-1	26	R1-N/R2-W	0.07	0.07	0.97	0.064	0.064	5.00	0.11	5.11	100	15.32	0.98	0.40%	8 " RCP	0.50%	481.59	481.51	2.81	2.81	0.12	0.12	HEC-22 ENERGY	0.15	481.66	480.32	480.26
SD LATERAL CO-10																												
CB-3	T-2	25.7	R2-E/R3	0.11	0.11	0.97	0.109	0.109	5.00	0.08	5.08	100	15.32	1.68	0.40%	10 " RCP	0.40%	482.06	482.01	3.08	3.08	0.15	0.15	HEC-22 ENERGY	0.17	482.13	480.51	480.46
SD LATERAL CO-11																												
CB-4	T-4	24.7	R4-W	0.04	0.04	0.97	0.036	0.036	5.00	0.10	5.10	100	15.32	0.56	1.50%	6 " RCP	0.70%	482.3	482.12	2.85	2.85	0.13	0.13	HEC-22 ENERGY	0.01	482.46	481.31	480.95
SD LATERAL CO-12																												
CB-6	CB-5	9.2	R4-E	0.04	0.04	0.97	0.036	0.036	5.00	0.02	5.02	100	15.32	0.56	2.30%	6 " RCP	2.70%	482.23	482.13	3.49	3.17	0.16	0.19	HEC-22 ENERGY	0.02	482.63	481.85	481.71

PROPOSED COMPOSITE C VALUES AND RUNOFF CALCULATIONS

DRAINAGE AREA	AREA (SF)	AREA (AC)	T_C (min)	IC (sf)	IC (AC)	IC (%)	C_{02}	C_{10}	C_{25}	C_{100}	i_{02} (in/hr)	i_{10} (in/hr)	i_{25} (in/hr)	i_{100} (in/hr)	Q_2 (cfs)	Q_{10} (cfs)	Q_{25} (cfs)	Q_{100} (cfs)
OP1	63435	1.46	15.5	0	0.000	0.0	0.21	0.25	0.29	0.36	4.17	6.21	7.64	10.06	1.27	2.26	3.23	5.27
P1	95650	2.20	6.1	67	0.002	0.1	0.21	0.25	0.29	0.36	5.93	8.90	10.96	14.43	2.74	4.89	6.99	11.42
OP2	6262	0.14	11.4	0	0.000	0.0	0.21	0.25	0.29	0.36	4.76	7.11	8.74	11.50	0.14	0.26	0.36	0.60
P2	14298	0.33	5.0	813	0.019	5.7	0.24	0.28	0.32	0.39	6.27	9.43	11.62	15.32	0.49	0.87	1.22	1.98
P3	25919	0.60	6.0	10058	0.231	38.8	0.41	0.47	0.50	0.59	5.96	8.95	11.02	14.51	1.46	2.49	3.27	5.08
P4	17284	0.40	5.0	12711	0.292	73.5	0.59	0.66	0.69	0.79	6.27	9.43	11.62	15.32	1.47	2.48	3.17	4.83
P5	20136	0.46	7.1	8777	0.202	43.6	0.44	0.49	0.53	0.62	5.67	8.50	10.45	13.76	1.14	1.94	2.54	3.92
P6	19460	0.45	18.3	5862	0.135	30.1	0.37	0.42	0.45	0.54	3.85	5.74	7.07	9.32	0.63	1.07	1.43	2.24
P7	16044	0.37	5.0	12087	0.277	75.3	0.60	0.67	0.70	0.80	6.27	9.43	11.62	15.32	1.39	2.33	2.98	4.54
P8	2257	0.05	5.0	144	0.003	6.4	0.24	0.29	0.32	0.40	6.27	9.43	11.62	15.32	0.08	0.14	0.20	0.32
P9	49464	1.14	5.0	747	0.017	1.5	0.22	0.26	0.30	0.37	6.27	9.43	11.62	15.32	1.55	2.77	3.94	6.42
P10	4350	0.10	6.8	738	0.017	17.0	0.30	0.34	0.38	0.46	5.75	8.62	10.61	13.96	0.17	0.30	0.40	0.64
P11	15628	0.36	5.0	1742	0.040	11.1	0.27	0.31	0.35	0.43	6.27	9.43	11.62	15.32	0.60	1.06	1.46	2.34
R1N*	1239	0.03	5.0	1239	0.028	100.0	0.75	0.83	0.88	0.97	6.27	9.43	11.62	15.32	0.13	0.22	0.29	0.42
R1S	1236	0.03	5.0	1236	0.028	100.0	0.75	0.83	0.88	0.97	6.27	9.43	11.62	15.32	0.13	0.22	0.29	0.42
R2W	1745	0.04	6.8	1745	0.040	100.0	0.75	0.83	0.88	0.97	5.75	8.62	10.61	13.96	0.17	0.29	0.37	0.54
R2E	1722	0.04	5.0	1722	0.040	100.0	0.75	0.83	0.88	0.97	6.27	9.43	11.62	15.32	0.19	0.31	0.40	0.59
R3	3276	0.08	5.0	3276	0.075	100.0	0.75	0.83	0.88	0.97	6.27	9.43	11.62	15.32	0.35	0.59	0.77	1.12
R4W	1629	0.04	5.0	1629	0.037	100.0	0.75	0.83	0.88	0.97	6.27	9.43	11.62	15.32	0.18	0.29	0.38	0.56
R4E	1627	0.04	5.0	1627	0.037	100.0	0.75	0.83	0.88	0.97	6.27	9.43	11.62	15.32	0.18	0.29	0.38	0.56
OPEN TOP	23794	0.55																
TOTAL	386454	8.87		66220	1.52	17.1												

Impervious Cover Summary

Existing (AC)		Proposed (AC)		NET Impervious Cover Added	New "added" IC (AC)	Redeveloped IC (AC)	Total New & Redeveloped IC (AC)	Total onsite Drainage area	Off-site Drainage Area
Impervious	Pervious	Impervious	Pervious						
1.07	7.55	1.52	6.81	-0.45	0.50	1.02	1.52	8.87	1.60

PROPOSED TIME OF CONCENTRATION CALCULATIONS

Subbasin		OP1	P1			OP2	P2	P3		P4	P5	P6		P7	P8	P9	P10
Sheet Flow [COA DCM Eq 2.-4]																	
Manning's Roughness	n	0.24				0.24		0.016	0.24	0.016	0.24	0.24			0.016		0.24
Sheet Flow Distance (ft)	L	100				100		25	18.7	100	46	69			78		90.18
Start Elev.	E1	498.5				496.5		487.2	486.7	488	485.3	487			486		485
End Elev.	E2	497.0				493.7		486.7	486.3	486.2	483.7	486			485.6		478
Land Slope (ft/ft)	S	0.015				0.028		0.020	0.021	0.018	0.035	0.014			0.005		0.078
Travel Time (min)	T	14.2				11.1		0.5	3.2	1.5	5.5	10.7			2.1		6.8
Total Travel Time (min)	T_Sheet	14.2	0.0			11.1	0.0	3.7		1.5	5.5	10.7		0.0	2.1	0.0	6.8
Shallow Concentrated Flow [COA DCM Eq. 2-5 (unpaved), Eq 2-6 (paved)]																	
Surface		**U**	**U**			**U**	**U**	**U**			**U**	**P**	**U**		**U**	**U**	
Length (ft)	L	183	84.3			76	60	164.6			139.2	111.8	206.3		10	106	
Start Elev.	E1	497	493.3			493.7	490	486.3			483.7	486	485.5		485.6	484	
End Elev.	E2	493.3	486			490	487.3	484.3			482.4	485.5	481.8		485.5	480	
Slope	S	0.020	0.087			0.048	0.045	0.012			0.009	0.004	0.018		0.010	0.038	
Time (min)	T	1.3	0.3			0.4	0.3	1.5			1.5	1.4	1.6		0.1	0.6	
Total Travel Time (min)	T_Shallow	1.3	0.3			0.4	0.3	1.5		0.0	1.5	3.0		0.0	0.1	0.6	0.0
Channel Flow [COA DCM Eq 2-8]			CF1	CF2	CF3												
Length (ft)	L		292	574	213		104	151.2		342.6	29.5	81.6		591		136	
Elevation (start)	E1		486	482	476.3		487.3			486.2				488		488	
Elevation (end)	E2		482	476.3	473		476			483.3				481.5		484	
Slope (ft/ft)	S		0.014	0.010	0.016		0.005	0.005		0.008	0.005	0.005		0.011		0.029	
Velocity (fps)	V		2.39	4.40	2.19		3.286	3.286		3.286	3.286	3.286		3.286		3.60	
Time (min)	T		2.0	2.2	1.6		0.5	0.8		1.7	0.1	4.6		3.0		0.6	
Total Travel Time (min)	T_Channel	0.0		5.8		0.0	0.5	0.8		1.7	0.1	4.6		3.0	0.0	0.6	0.0
Time of Concentration (min)	Tc	**15.5**		**6.1**		**11.4**	**5.0**	**6.0**		**5.0**	**7.1**	**18.3**		**5.0**	**5.0**	**5.0**	**6.8**

APPENDIX Q-2

IMPERVIOUS COVER

SUBURBAN WATERSHEDS

NOTE: Q-1 TABLES ARE NOT REQUIRED FOR SUBURBAN WATERSHEDS

1	IMPERVIOUS COVER ALLOWED AT 80 % X (GROSS SITE AREA)	=	17.6	ACRES

PROPOSED IMPERVIOUS COVER

2	EXISITING IMPERVIOUS COVER PROPOSED TO REMAIN	=	0.558	ACRES
3	PROPOSED NEW IMPERVIOUS COVER	=	1.625	ACRES
4	**TOTAL PROPOSED IMPERVIOUS COVER**	=	**2.183**	**ACRES**

ALLOWABLE IMPERVIOUS COVER BREAKDOWN BY SLOPE CATEGORY

5 TOTAL ACREAGE WITH SLOPES 15-25% = 0.97 ACREAS X 10% = 0.097 ACRES

PROPOSED IMPERVIOUS COVER ON SLOPES

SLOPE CATEGORIES	ACRES	IMPERVIOUS COVER: BUILDING & OTHER IMPERVIOUS COVER ACRES	IMPERVIOUS COVER: DRIVES / ROADWAYS ACRES
6 0-15%	20.6	1.16	0.86
7 15-25%	1.0	0.05	0.02
8 25-35%	0.3	0.04	0.01
9 OVER 35%	0.2	0.04	0.01
10 GROSS SITE AREA	22.0	1.29	0.89

Source: Rule No. R161-14.23, 9-2-2014 ; Rule No. R161-21.04 , 3-9-2021.

THIS CONFORMED DOCUMENT IS RELEASED FOR THE CONVENIENCE OF THE CONTRACTOR UNDER THE AUTHORITY OF:

Stephanie D Blew 11-01-22

STEPHANIE D. BLEW, P.E. DATE

TX LIC NO. 92682

SEE DISCLAIMER FOR LIMITATIONS OF USE.

CONTRACT DOCUMENTS DATED JUNE 10, 2022, AS PART OF THE BIDDING DOCUMENTS (DRAWINGS AND SPECIFICATIONS) AND SUBSEQUENTLY ISSUED ADDENDA HAVE BEEN MERGED INTO ONE CONFORMING SET OF DOCUMENTS FOR THE CONVENIENCE OF THE CONTRACTOR. IF INCONSISTENCIES OR AMBIGUITIES BETWEEN "CONFORMED" DOCUMENTS AND CONTRACT DOCUMENTS ARE FOUND, THE CONTRACT DOCUMENTS SHALL GOVERN.

REV	DATE	BY	DESCRIPTION
			CONFORMED DOCUMENTS

DESIGNED SDB | DRAWN JF | CHECKED AR | DATE NOVEMBER 2022

** ORIGINAL SEALED BY STEPHANIE D. BLEW 05-13-22 TX PE 92682 **

CAS CONSULTING & SERVICES, INC.
CIVIL ENGINEERING | PROGRAM MANAGEMENT | CONSTRUCTION MANAGEMENT
7908 Cameron Road | Austin, TX 78754 | REG. NO. F-003572
Main: 512.836.2588 | Fax: 512.836.4515

carollo® TBPELS No. F-882

CITY OF AUSTIN

CITY OF AUSTIN
WILD HORSE RANCH WWTP EXPANSION
CIVIL
PROPOSED DRAINAGE CALCULATIONS

VERIFY SCALES
BAR IS ONE INCH ON ORIGINAL DRAWING
0 1"
IF NOT ONE INCH ON THIS SHEET, ADJUST SCALES ACCORDINGLY

JOB NO. 10976A.00
DRAWING NO. 00C04
SHEET NO. 235 OF 464

LAST SAVED BY: ALINA.ALEMAN

PROJECT NO. 9585A10 FILE NAME: \\CAS-DATASERVER\WATER\ACTIVE PROJECTS\COA WILD HORSE (NE WWTP) CAROLLO\3.0 CAD\10976A10_DRNGC02.DWG

SP-2022-1025C

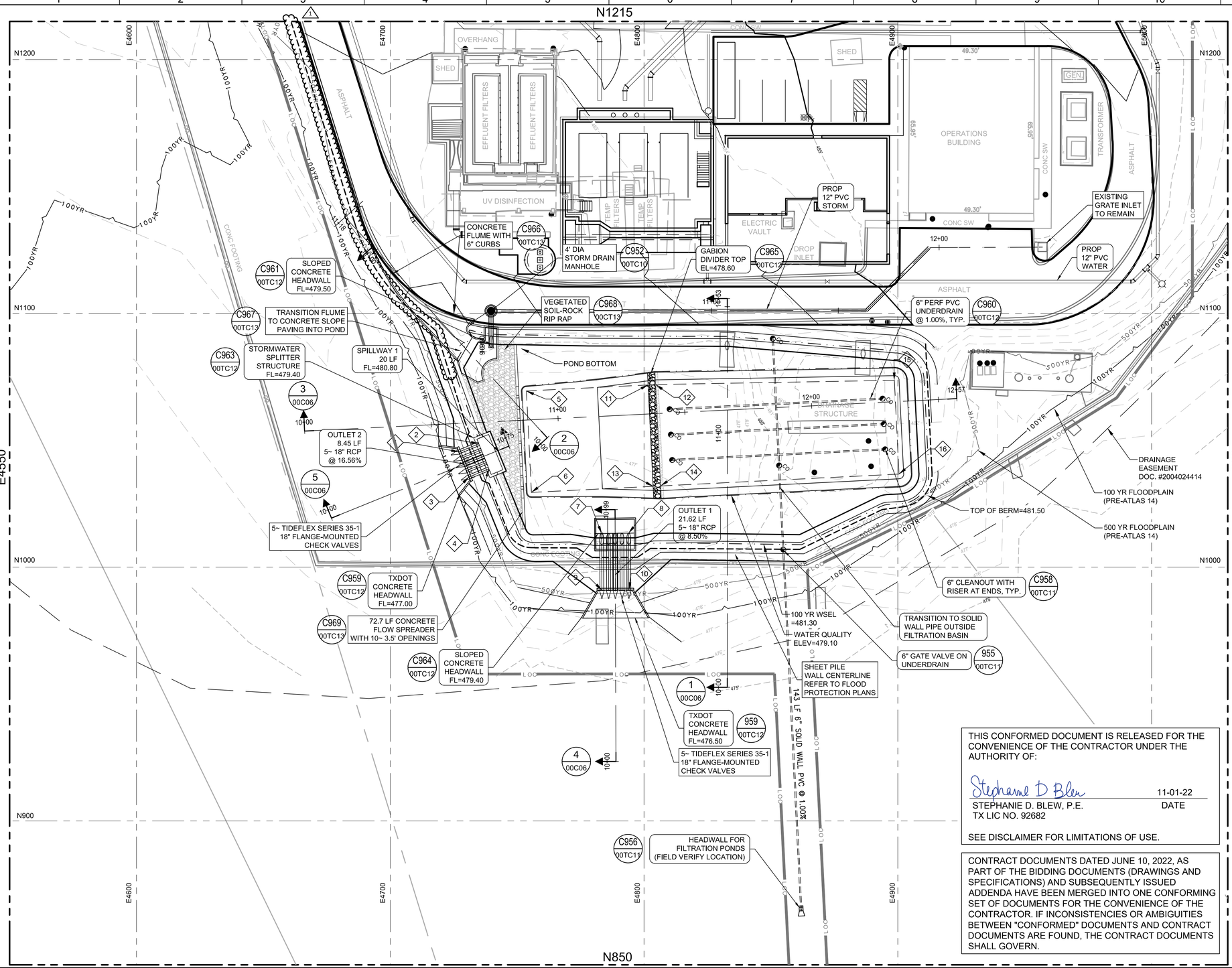

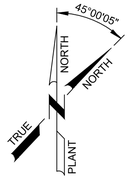

SCALE: 1" = 20'

DESIGN POINT TABLE

POINT #	PLANT NORTHING	PLANT EASTING	ELEVATION	DESCRIPTION
1	1045.39	4727.04	478.00	18" RCP FL IN
2	1048.57	4734.87	479.40	18" RCP FL OUT
3	1035.53	4731.04	478.00	18" RCP FL IN
4	1038.71	4738.87	479.40	18" RCP FL OUT
5	1069.38	4753.65	478.20	SEDIMENTATION BED CORNER
6	1029.43	4755.64	478.20	SEDIMENTATION BED CORNER
7	1013.24	4783.29	479.40	18" RCP FL IN
8	1013.36	4793.93	479.40	18" RCP FL IN
9	990.91	4783.37	477.00	18" RCP FL OUT
10	990.95	4794.01	477.00	18" RCP FL OUT
11	1071.77	4801.59	477.39	SEDIMENTATION BED CORNER
12	1071.92	4804.59	477.20	FILTRATION BED CORNER
13	1031.82	4803.58	477.39	SEDIMENTATION BED CORNER
14	1031.97	4806.57	477.20	FILTRATION BED CORNER
15	1073.59	4898.62	477.20	FILTRATION BED CORNER
16	1036.64	4900.46	477.20	FILTRATION BED CORNER

LEGEND

- DRAINAGE EASEMENT
- EASEMENT LINES
- LIMITS OF CONSTRUCTION
- 500YR — 500 YEAR FLOOD PLAIN
- 100YR — 100 YEAR FLOOD PLAIN
- CWQZ — CRITICAL WATER QUALITY ZONE
- OHWM — ORDINARY HIGH WATER MARK
- W — EXISTING WATER LINE
- ST — EXISTING STORM LINE
- PROPOSED CLEANOUT
- PROPOSED CURB INLET
- PROPOSED STORM DRAIN LINE
- SDMH — PROPOSED STORM DRAIN MANHOLE
- POND UNDERDRAIN
- SHEET PILE WALL CENTERLINE
- GATE VALVE
- CHECK VALVE
- HEADWALL(S)
- DESIGN POINT

THIS CONFORMED DOCUMENT IS RELEASED FOR THE CONVENIENCE OF THE CONTRACTOR UNDER THE AUTHORITY OF:

Stephanie D Blew — 11-01-22

STEPHANIE D. BLEW, P.E. — DATE
TX LIC NO. 92682

SEE DISCLAIMER FOR LIMITATIONS OF USE.

CONTRACT DOCUMENTS DATED JUNE 10, 2022, AS PART OF THE BIDDING DOCUMENTS (DRAWINGS AND SPECIFICATIONS) AND SUBSEQUENTLY ISSUED ADDENDA HAVE BEEN MERGED INTO ONE CONFORMING SET OF DOCUMENTS FOR THE CONVENIENCE OF THE CONTRACTOR. IF INCONSISTENCIES OR AMBIGUITIES BETWEEN "CONFORMED" DOCUMENTS AND CONTRACT DOCUMENTS ARE FOUND, THE CONTRACT DOCUMENTS SHALL GOVERN.

NOTES:

1. CONTRACTOR SHALL PROVIDE AS-BUILT SURVEYS OF THE POND TO THE CITY UPON COMPLETION OF FINAL GRADE. SURVEYS SHALL BE CONDUCTED BY A LICENSED SURVEYOR AND INCLUDE REPRESENTATIVE SURVEY POINTS WITH ELEVATIONS TAKEN AT TOP OF WALL, BOTTOM OF WALL, CENTER OF BASIN, INLETS, OUTFALLS, OVERFLOW STRUCTURES, AND SIDE SLOPES. ADDITIONAL SURVEY POINTS MAY BE REQUESTED AT THE DISCRETION OF THE CITY INSPECTOR TO ENSURE BASIN INTEGRITY.

2. AS REQUIRED BY ECM 1.6.3(B)(4), ALL POND BOTTOMS, SIDE-SLOPES, AND EARTHEN EMBANKMENTS SHALL BE COMPACTED TO NINETY-FIVE (95) PERCENT MAXIMUM DENSITY, IN ACCORDANCE WITH CITY OF AUSTIN STANDARD SPECIFICATIONS.

3. EXPANSION JOINTS ON FREE-STANDING WALLS SHALL HAVE WATER-TIGHT SEALS AS NEEDED. ECM 1.6.3(B)(4).

REV	DATE	BY	DESCRIPTION
1	09-05-22	SDB	ADDENDUM 5

FINAL SUBMITTAL

DESIGNED SDB
DRAWN JF
CHECKED AR
DATE NOVEMBER 2021

** ORIGINAL SEALED BY STEPHANIE D. BLEW 09-05-22 TX PE 92682 **

CAS CONSULTING & SERVICES, INC.
CIVIL ENGINEERING | PROGRAM MANAGEMENT | CONSTRUCTION MANAGEMENT
7908 Cameron Road | Austin, TX 78754 |REG. NO. F-003572
Main: 512.836.2388 | Fax: 512.836.4515

carollo
TBPELS No. F-882

CITY OF AUSTIN
FOUNDED 1839

CITY OF AUSTIN

CITY OF AUSTIN
WILD HORSE RANCH WWTP EXPANSION
CIVIL
WATER QUALITY POND PLAN

VERIFY SCALES
BAR IS ONE INCH ON ORIGINAL DRAWING
0 — 1"
IF NOT ONE INCH ON THIS SHEET, ADJUST SCALES ACCORDINGLY

JOB NO. 10976A.00
DRAWING NO. 00C05
SHEET NO. 236 OF 464

LAST SAVED BY: dselvert

PROJECT NO. 9585A10 FILE NAME: 9585A10_SheetSeed.dgn

SP-2022-0125C

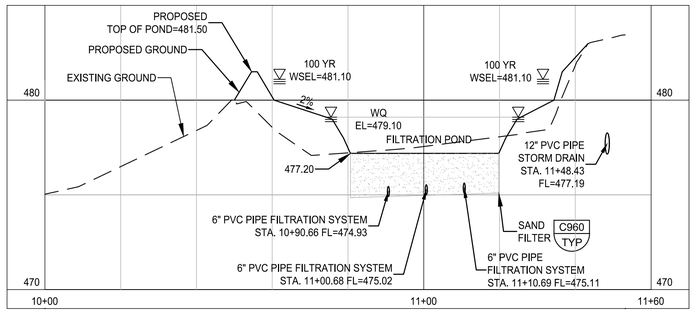

1 / 00C05 SECTION - FILTRATION POND

SCALE: HORIZONTAL 1" = 20'
VERTICAL 1" = 4'

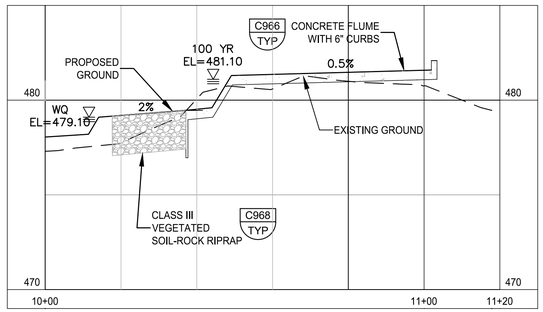

2 / 00C05 SECTION - INFLOW FLUME

SCALE: HORIZONTAL 1" = 20'
VERTICAL 1" = 4'

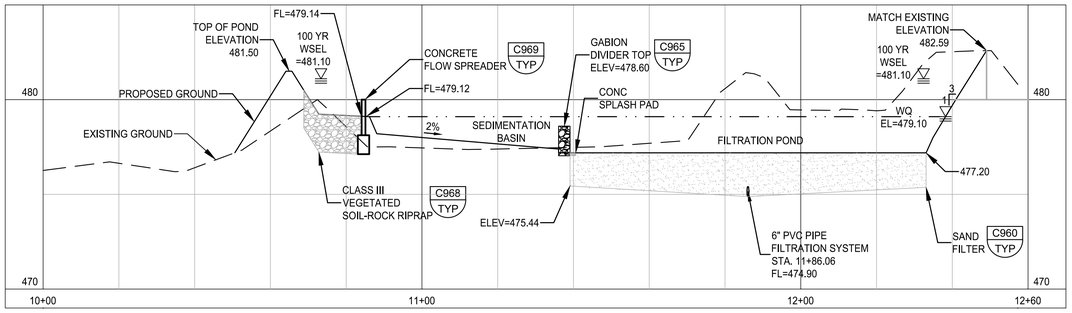

3 / 00C05 SECTION - DETENTION & PARTIAL SEDIMENTATION/FILTRATION POND

SCALE: HORIZONTAL 1" = 20'
VERTICAL 1" = 4'

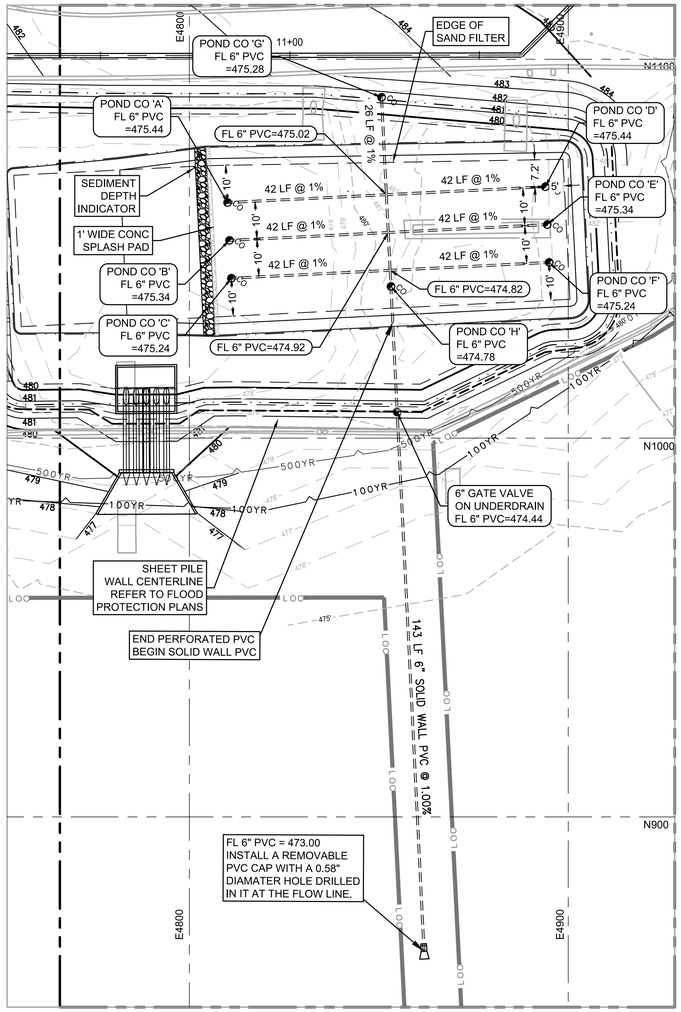

6 / 00C02 SAND FILTER UNDERDRAIN -PLAN VIEW

SCALE: 1" = 20'

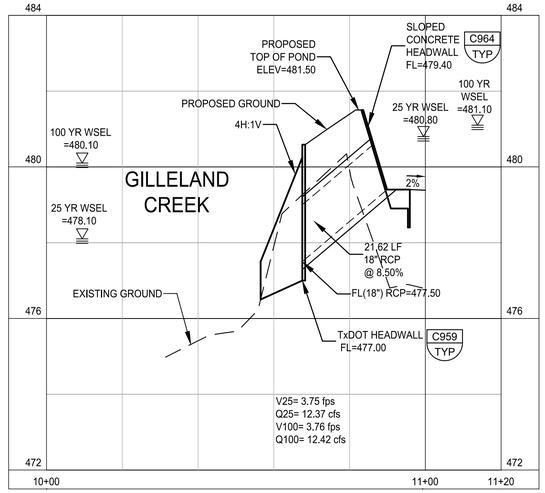

4 / 00C05 SECTION - OUTFALL1

SCALE: HORIZONTAL 1" = 20'
VERTICAL 1" = 2'

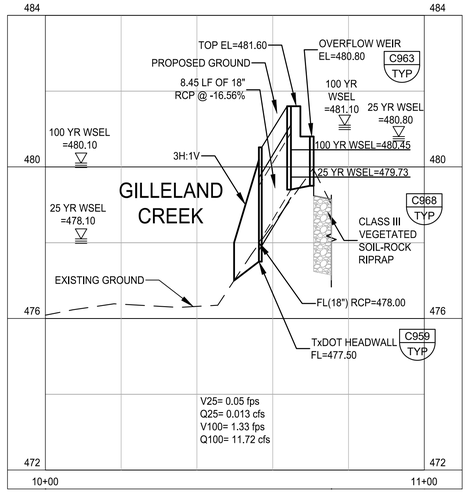

5 / 00C05 SECTION - OUTFALL 2

SCALE: HORIZONTAL 1" = 20'
VERTICAL 1" = 2'

45°00'05"
NORTH
NORTH
TRUE
PLANT

THIS CONFORMED DOCUMENT IS RELEASED FOR THE CONVENIENCE OF THE CONTRACTOR UNDER THE AUTHORITY OF:

Stephanie D Blew 11-01-22

STEPHANIE D. BLEW, P.E. DATE
TX LIC NO. 92682

SEE DISCLAIMER FOR LIMITATIONS OF USE.

CONTRACT DOCUMENTS DATED JUNE 10, 2022, AS PART OF THE BIDDING DOCUMENTS (DRAWINGS AND SPECIFICATIONS) AND SUBSEQUENTLY ISSUED ADDENDA HAVE BEEN MERGED INTO ONE CONFORMING SET OF DOCUMENTS FOR THE CONVENIENCE OF THE CONTRACTOR. IF INCONSISTENCIES OR AMBIGUITIES BETWEEN "CONFORMED" DOCUMENTS AND CONTRACT DOCUMENTS ARE FOUND, THE CONTRACT DOCUMENTS SHALL GOVERN.

REV	DATE	BY	DESCRIPTION
			CONFORMED DOCUMENTS

DESIGNED SDB
DRAWN JF
CHECKED AR
DATE NOVEMBER 2022

** ORIGINAL SEALED BY STEPHANIE D. BLEW 02-28-22 TX PE 92682 **

CAS CONSULTING & SERVICES, INC.
CIVIL ENGINEERING | PROGRAM MANAGEMENT | CONSTRUCTION MANAGEMENT
7908 Cameron Road | Austin, TX 78754 | REG. NO. F-003572
Main: 512.836.2388 | Fax: 512.836.4515

carollo
TBPELS No. F-882

CITY OF AUSTIN
FOUNDED 1839
CITY OF AUSTIN

CITY OF AUSTIN
WILD HORSE RANCH WWTP EXPANSION
CIVIL
WATER QUALITY POND SECTIONS

VERIFY SCALES
BAR IS ONE INCH ON ORIGINAL DRAWING
0 1"
IF NOT ONE INCH ON THIS SHEET, ADJUST SCALES ACCORDINGLY

JOB NO. 10976A.00
DRAWING NO. 00C06
SHEET NO. 237 OF 464

LAST SAVED BY: dseivert

PROJECT NO. 9585A10 FILE NAME: 9585A10_SheetSeed.dgn

SP-2022-1025C

PARTIAL SEDIMENTATION/FILTRATION POND CONSTRUCTION NOTES:

1. RETAINING WALLS WITHIN SCMS REQUIRE WATER-TIGHTNESS. WATER-TIGHTNESS IN RETAINING WALLS IS ESSENTIAL TO THE FUNCTION OF THE STRUCTURE. WATERSTOPS SHALL BE PROVIDED DURING CONSTRUCTION OF EXPANSION JOINTS IN RETAINING WALLS PER STANDARD SPECIFICATION 414S, CONCRETE RETAINING WALLS.

ECM 1.6.3.B MAINTENANCE REQUIREMENTS - DESIGN AND CONSTRUCTION:

1. THE FOLLOWING MAINTENANCE ACTIVITIES SHALL BE PERFORMED ON ALL SCMS, IN ADDITION TO THE REQUIREMENTS LISTED FOR THE INDIVIDUAL SCM TYPES, TO ENSURE PROPER FUNCTION:

   A. ACCUMULATED PAPER, TRASH AND DEBRIS SHALL BE REMOVED EVERY SIX (6) MONTHS OR AS NECESSARY TO MAINTAIN PROPER OPERATION.
   B. STRUCTURAL INTEGRITY SHALL BE MAINTAINED AT ALL TIMES. BASINS AND ALL APPURTENANCES SHALL BE INSPECTED ANNUALLY, OR MORE FREQUENTLY IF SPECIFIED, AND REPAIRS SHALL BE MADE IF NECESSARY. WHEN MAINTENANCE OR REPAIRS ARE PERFORMED, THE SCM SHALL BE RESTORED TO THE ORIGINAL LINES AND GRADES.
   C. CORRECTIVE MAINTENANCE SHALL OCCUR:

      I. ANY TIME DRAWDOWN OF THE WATER QUALITY VOLUME DOES NOT OCCUR WITHIN NINETY-SIX (96) HOURS (I.E., NO STANDING WATER IS ALLOWED), UNLESS A GREATER MAXIMUM DRAWDOWN TIME IS SPECIFIED IN THE PLANS.
      II. FOR DETENTION PONDS ONLY, ANY TIME DRAWDOWN DOES NOT OCCUR WITHIN TWENTY-FOUR (24) HOURS.

   D. THE INLET AND OUTLET OF SCMS SHALL BE MAINTAINED UNIMPEDED IN ORDER TO CONVEY FLOW AT ALL TIMES. OBSERVED BLOCKAGES TO THE INLET AND OUTLET, DUE TO VEGETATION, SEDIMENT, DEBRIS, OR ANY OTHER CAUSE, SHALL BE REMOVED.
   E. NO UNVEGETATED AREA SHALL EXCEED TEN (10) SQUARE FEET. THIS PERFORMANCE REQUIREMENT APPLIES TO THE ENTIRE POND INCLUDING THE POND BOTTOM, SIDE SLOPES, AND AREAS ADJACENT TO THE POND, AND IS INTENDED TO LIMIT EROSION.
   F. INTEGRATED PEST MANAGEMENT SHALL BE PERFORMED AND SHALL ADHERE TO SECTION 1.6.2.F, INTEGRATED PEST MANAGEMENT GUIDELINES.
   G. THE MINIMUM VEGETATION HEIGHT SHALL BE FOUR (4) INCHES IN THE SCM AND ALL APPURTENANCES, INCLUDING THE TOE OF THE BERM OR WALL OUTSIDE THE SCM, WHERE APPLICABLE.
   H. SEDIMENT BUILD-UP SHALL BE REMOVED:

      I. WHEN THE ACCUMULATION EXCEEDS SIX (6) INCHES IN SPLITTER BOXES, WET WELLS AND BASINS.
      II. WHEN SEDIMENT TRAPS ARE FULL.
      III. WHEN SEDIMENT, OF ANY AMOUNT, CAUSES STANDING WATER CONDITIONS OR REDUCES BASIN STORAGE BY MORE THAN 10%.

   I. WHEN SEDIMENT IS REMOVED, THE FOLLOWING REQUIREMENTS APPLY:

      I. IRRIGATION SHALL BE PROVIDED, AS NEEDED, UNTIL VEGETATION IS ESTABLISHED (WELL ROOTED). SEE SECTION 1.6.3.D, IRRIGATION GUIDELINES.
      II. THE DESIGN DEPTH OF THE FILTRATION MEDIA SHALL BE VERIFIED. SEE SECTION 1.6.3.B.5.
      III. TILLING OF THE FILTRATION MEDIUM IS NOT ALLOWED.

ECM 1.6.3.C MAJOR MAINTENANCE REQUIREMENTS:

1. SEDIMENTATION AND FILTRATION SCM's (SECTION 1.6.5).

   a. VEGETATION WITHIN THE SCM SHALL NOT EXCEED EIGHTEEN (18) INCHES IN HEIGHT AT ANYTIME, EXCEPT AS CALLED FOR IN THE DESIGN.

   b. VEGETATION THAT IS MOWED OR CUT SHALL BE REMOVED FROM THE SCM.

2. DETENTION BASINS.

   a. VEGETAION WITHIN THE BASIN SHALL NOT EXCEED EIGHTEEN(18) INCHES IN HEIGHT AT ANY TIME.

WATER QUALITY POND NOTES & SPECIFICATIONS

BASIN LINERS

IMPERMEABLE LINERS ARE NOT REQUIRED FOR THIS PROJECT SINCE IT IS NOT LOCATED OVER THE EDWARDS AQUIFER RECHARGE ZONE.

GEOTEXTILE FABRIC SPECIFICATIONS

PROPERTY	TEST METHOD	UNIT	SPECIFICATION
MATERIAL	NONWOVEN GEOTEXTILE FABRIC		
UNIT WEIGHT		OZ/SQ YD	8 (MIN)
FILTRATION WEIGHT		IN/SEC	0.08 (MIN)
PUNCTURE STRENGTH	ASTM D-751 (MODIFIED)	LB	125 (MIN)
MULLEN BURST STRENGTH	ASTM D-751	PSI	400 (MIN)
TENSILE STRENGTH	ASTM D-1682	LB	200 (MIN)
EQUIVALENT OPENING SIZE	US STANDARD SIEVE	NO	80 (MIN)

SAND BED WITH GRAVEL LAYER

SAND WHICH CORRESPONDS WITH ASTM C-33 CONCRETE SAND (SMALLER SAND SIZE IS NOT ACCEPTABLE). UNDER THE SAND SHALL BE A LAYER OF ONE-HALF (0.5) TO ONE AND ONE-HALF (1.5) INCH DIAMETER WASHED, ROUNDED, RIVER GRAVEL WHICH PROVIDES A MINIMUM OF THREE (3) INCHES OF COVER OVER THE TOP OF THE UNDERDRAIN LATERAL PIPES. TWO (2) INCHES OF GRAVEL IS REQUIRED UNDER THE LATERAL PIPES. THE SAND AND GRAVEL MUST BE SEPARATED BY A LAYER OF GEOTEXTILE FABRIC MEETING THE REQUIREMENTS SHOWN IN THE SPECIFICATION 620S TABLE 2: HIGH FLOW FILTER FABRIC.

SAND BED - TRENCH DESIGN

DIAMETER SAND WHICH CORRESPONDS WITH ASTM C-33 CONCRETE SAND (SMALLER SAND SIZE IS NOT ACCEPTABLE.) LATERALS SHALL BE PLACED IN TRENCHES WITH A COVERING OF ONE-HALF (0.5) TO TWO (2) INCH GRAVEL AND GEOTEXTILE FABRIC MEETING THE REQUIREMENTS SHOWN IN STANDARD SPECIFICATIONS 620S TABLE 2: HIGH FLOW FILTER FABRIC. THE BASIN SHALL BE UNDERLAIN BY A LAYER OF DRAINAGE MATTING. THE GEOTEXTILE FABRIC IS NEEDED TO PREVENT THE FILTER MEDIA FROM INFILTRATING INTO THE LATERAL PIPING. THE DRAINAGE MATTING IS NEEDED TO PROVIDE FOR ADEQUATE VERTICAL AND HORIZONTAL HYDRAULIC CONDUCTIVITY TO THE LATERALS. THE GETOEXTILE

DRAINAGE MATTING SPECIFICATIONS

PROPERTY	TEST METHOD	UNIT	SPECIFICATION
MATERIAL	NONWOVEN GEOTEXTILE FABRIC		
UNIT WEIGHT		OZ/SQ YD	20
FLOW RATE (FABRIC)		GPM/FT2	180 (MIN)
PERMEABILITY	ASTM D-2434	CM/SEC	12.4X10-2
GRAB STRENGTH (FABRIC)	ASTM D-1682	LB	RY LG. 90 DR. WD:7 ET LG. 95 WET WD:
PUNCTURE STRENGTH (FABRIC) STRENGTH	COE CW-02215		42 (MIN)
MULLEN BURST STRENGTH	ASTM D-1117	PSI	140 (MIN)
EQUIVALENT OPENING SIZE	US STANDARD SIEVE	NO	100 (70-120)
FLOW RATE (DRAINAGE CORE)	DREXEL UNIVERSITY TEST METHOD	GPM/FT/WIDTH	14

UNDERDRAIN PIPING

LATERAL BRANCH PIPES. THE PIPING SHOULD BE REINFORCED TO WITHSTAND THE WEIGHT OF THE OVERBURDEN. INTERNAL DIAMETERS OF LATERAL BRANDY PIPES SHOULD BE SIX (6) INCHES OR GREATER AND PERFORMATIONS SHOULD BE THREE-EIGHTS (3/8) INCH. ALL PIPING IS TO BE SCHEDULE 40 POLYVINYL CHOLORIDE (PVC) OR GREATER STRENGTH. THE MAXIMUM SPACING FOR THE LATERALS SHOUDL BE TEN (10) FEET BETWEEN LATERALS AND FIVE (5) FEET FROM A WALL OR SIDE. LESSER SPACINGSS ARE ACCEPTABLE. THE MAXIMUM SPACING BETWEEN ROWS OF PERFORATIONS SHOUJDL NOT EXCEED SIX (6) INCHES.

PERCENT SLOPE). ACCESS FOR CLEANING ALL UNDERDRAIN PIPING IS NEEDED. CLEANOUTS ARE REQUIRED WITHIN FIFTY (50) FEET OF EVERY PORTION OF LATERAL AND COLECTOR DRAIN LINES AND AT EVERY BEND. IN ADDITION, AT LEAST ONE LATERAL MUST BE ACCESSIBLE FOR CLEANING WHEN THE POND IS FULL.

Stage(ft msl)	Sedimentation Pond Area (sf)	Sedimentation Pond Storage (cf)	Filtration Pond Area (sf)	Filtration Pond Storage (cf)
477.2	0	0	3619	0
478.0	832	333	4038	3063
479.0	2278	1888	4741	7453
479.1	2599	2132	5081	7944
479.5	3883	3428	6437	10247
480.0	4052	5412	6813	13560
481.0	5425	10150	7590	20761
481.5	5824	12963	7965	24650

Stacked Pond	2-yr	10-yr	25-yr	100-yr
WSE (ft)	480.3	480.6	480.8	481.1
Storage (ac-ft)	0.5	0.6	0.7	0.7
Inflow (cfs)	12.1	19.5	24.4	32.7
Outflow (cfs)	5.4	9.7	12.40	24.1

Outlet 2 Culvert Calculation Summary Table

Solve For: Headwater Elevation	25-yr	100-yr
Culvert Summary		
Allowable HW Elevation (ft)	480.80	481.10
Computed Headwater Elevation (ft)	479.43	480.28
Inlet Control HW Elev. (ft)	479.40	480.10
Outlet Control HW Elev. (ft)	479.43	480.28
Headwater Depth/Height	0.02	0.58
Discharge (cfs)	0.013	11.09
Tailwater Elevation (ft)	478.10	480.10
Control Type	Entrance Cont.	Entrance Cont.
Grade		
Upstream Invert (ft)	479.40	479.40
Length (ft)	8.45	8.45
Downstream Invert (ft)	478.00	478.00
Constructed Slope (ft/ft)	0.165680	0.165680
Hydraulic Profile		
Profile	CompositeS1S2	Composite Pressure ProfileS1S2
Slope Type	Steep	N/A
Flow Regime	N/A	N/A
Velocity Downstream (ft/s)	0.05	1.26
Depth, Downstream (ft)	0.10	2.10
Normal Depth (ft)	0.00	0.23
Critical Depth (ft)	0.02	0.56
Critical Slope (ft/ft)	0.010405	0.004973
Section		
Section Shape	Circular	Circular
Section Material	Concrete	Concrete
Setion Size (inch)	18	18
Number Sections	5	5
Mannings Coefficient	0.013	0.013
Span (ft)	1.50	1.50
Rise (ft)	1.50	1.50
Outlet Control Properties		
Outlet Control HW Elev. (ft)	479.43	480.28
Ke	0.50	0.50
Upstream Velocity Head (ft)	0.01	0.21
Entrance Loss (ft)	0.00	0.10
Inlet Control Properties		
Inlet Control HW Elev. (ft)	479.40	480.10
Inlet Type	Square edge w/headwall	Square edge w/headwall
K	0.00980	0.00980
M	2.00000	2.00000
C	0.03980	0.03980
Y	0.67000	0.67000
Flow Control	Unsubmerged	Unsubmerged
Area Full (ft^2)	8.8	8..8
HDS 5 Chart	1	1
HDS 5 Scale	1	1
Equation Form	1	1

Outlet 2 Concrete Flow Spreader Summary Table

Solve For: Headwater Elevation	25-yr	100-yr
Input Data		
Number of Openings	10	1
Discharge (cfs)	2.43	32.65
Crest Elevation (ft)	479.14	480.80
Tailwater Elevation (ft)	479.12	479.12
Weir Coefficient (ft^(1/s))	3.33^(1/2)	3.33^(1/2)
Crest Length (ft)	3.5	72.7
Number of Contractions	2	2
Results		
Headwater Elevation (ft)	479.50	481.06
Headwater Height Above Crest (ft)	0.36	0.26
Tailwater Height Above Crest (ft)	-0.02	0.00
Flow Area (ft^2)	1.2	19.1
Velocity (ft/s)	1.95	1.71
Wetted Perimeter (ft)	4.2	73.2
Top Width (ft)	3.50	72.70

APPENDIX R-3 - PARTIAL SEDIMENTATION/FILTRATION POND CALCULATIONS FOR DEVELOPMENT PERMITS

DRAINAGE AREA DATA:

	Prop	
Drainage Area to Control (DA)	2.61	ac.
Drainage Area Impervious Cover	54.7	%
Capture Dpeth (CD)	0.85	in
Water Quality Volume (WQV=CD*DA*3630)	8015	cf

WATER QUALITY CONTROL CALCULATIONS:	Required	Provided	
The Water Quality Control is to be FULL SEDIMENTATION FILTRATION			
25-year Peak Flow Rate to Control (Q25)	24.4		cfs
100-year Peak Flow Rate to Control (Q100)	32.7		cfs
Water Quality Volume (WQV=CD*DA*3630)	8015	10548	cf
Maximum Ponding Depth in Sedimentation Pond (H)		1.70	ft
Sedimentation Pond Area		1920	sf
Sedimentation Pond Volume (minimum 20% of WQV)	min. 1603	2654	cf
Filtration Pond Area (WQV/4+1.33*H)	2006	3617	sf
Filtration Pond Volume		7894	cf
Water Quality Elevation	479.1		ft msl
Elevation of Splitter/Overflow Weir	min. WQE 479.10	480.8	ft msl
Height of Gabion Wall	min. WQE - 0.5 ft 478.60	478.6	ft msl
Length of Splitter Weir		20.00	ft
Required Head to Pass Q100	max. 1.0	0.28	ft
Pond Freeboard Provided to Pass Q100	min. 0.25	0.40	ft
48 Hour Drawdown Time Orifice Opening diameter (inches)		0.58	in

Sedimentation Pond — Stage (ft msl)* Area (sf) Storage (cf)
Filtration Pond — Stage (ft msl)* Area (sf) Storage (cf)
* in one foot or less increments

Pond Outlets - Flow Leaving Headwall

Data Input	Outlet 1	Outlet 2
Roughness Coefficient	0.015	0.015
Channel Slope (%)	4.5	7.6
Normal Depth (inches)	1.3	1.1
Bottom Width (ft)	25.87	20.71
100-YR Discharge (cfs)	13.05	11.09
Velocity (fps)	4.72	5.66
Flow Type	Supercritical	Supercritical

IMPERVIOUS COVER SUMMARY

ID	Description	Exisiting Impervious Area (SF)	Proposed Impervious Area (SF)	Total Impervious Area (SF)
10	Influent Lift Station	1015		1015
15	Influent Lift Station Odor Control			0
20	Headworks		2336	2336
25	Headworks Odor Control		1576	1576
30-1	Aeration Basins*	7646		0
30-2	Aeration Basins*		6995	0
31	Mixed Liquor Splitter Box		296	296
40-1	Secondary Clarifiers*	3051		0
40-2	Secondary Clarifiers*		3051	0
40-3	Secondary Clarifiers*		3051	0
45	RAS Pump Station	516		516
46	RAS Splitter Box		217	217
47	WAS Pump Station		442	442
50	Filters and UV Facility		3225	3225
55	Existing Filter Structure	3033		3033
65	Plant Water Pump Station		230	230
70	Sludge Holding Tank No. 1		1732	1732
71	Sludge Holding Tank No. 2	588		588
72	Plant Drain Pump Station		309	309
75	Thickening Building		1621	1621
80	Operations Building	3238		3238
85	Electrical Building		3312	3312
90	Administration Building		3274	3274
G1	Generator Box		353	353
C1	Concrete Sidewalk	154		154
C2	Concrete Sidewalk	541		541
C3	Concrete Sidewalk	358		358
C4	Concrete Sidewalk	672		672
D1	Driveway		15011	15011
D2	Driveway		1245	1245
D3	Driveway	16825		16825
D4	Driveway	1450		1450
T1	Transformer	450		450
P1	Parking Lot		3673	3673
	Total	**39537.0**	**51949.0**	**91486**

*Open treatment areas are not considered as IC

HYDROLOGIC SUMMARY TABLE

Outfall/Design Point	HEC-HMS Subbasin	Drainage Area	Area (ac)	Tc (min)	Tlag (min)	Peak Flow, Q (cfs) 2-yr	10-yr	25-yr	100-yr
EO1	Pre-Dev EO1	E5, E6, E7, E10	1.50	12.79	7.67	16.80	30.20	39.20	54.10
	Bypass EO1	OE1, E1, E3, E4	5.35	22.68	13.61				
EO2	Bypass EO2	OE2, E2, E8	1.64	13.44	8.06	5.00	9.00	11.70	16.10
EO3	Bypass EO3	E9	0.13	6.98	4.19	0.50	0.90	1.20	3.20
	Ex Open Top	Aeration Basin 1&2 & Clarifier 1	0.25						
			8.87						
PO1	Prop Pond PO1	P3, P4, P5, P6, P7, P8, Roof Top	2.61	7.10	4.26	14.5	26.1	33.60	51.1
	Bypass PO1	OP1, P1	3.65	21.66	13.00				
PO2	Bypass PO2	OP2, P2, P9	1.61	13.44	8.06	5.00	8.90	11.50	15.80
PO3	Bypass PO3	P10	0.10	6.78	4.07	0.40	0.70	0.90	1.20
	Prop Open Top	Aeration Basin 1&2,3&4, Clarifier 1, 2, 3	0.55						
	Stacked Pond	P11	0.36						
			8.87						

NOTES:

1. PRE-DEVELOPED RUNOFF CALCULATIONS USING ATLAS-14 RAINFALL WERE PREPARED TO DETERMINE THE ALLOWABLE RELEASE RATES FOR THE PROPOSED CONDITION.

Orifice Calculator

Select type of stormwater control measure from pull down menu:

Partial sedimentation/filtration

For partial sedimentation/filtration ponds the surface area of the bottom of the sedimentation and filtration chambers are used for area A

Surface Area A (sq.ft.)	5,537
Orifice coefficient	0.6
h_1 (ft)	479.1
h_2 (ft)	473
t (hr)	48
Ao (sq.ft.)	0.002
Orifice diameter (in.)	0.58

Falling head orifice equation:

$$A_o = \frac{-2A}{C_d * t * \sqrt{2g}} * \left[\sqrt{h_2} - \sqrt{h_1}\right]$$

DO NOT apply standard orifice equation whereby average h is assumed

THIS CONFORMED DOCUMENT IS RELEASED FOR THE CONVENIENCE OF THE CONTRACTOR UNDER THE AUTHORITY OF:

Stephanie D Blew — 11-01-22

STEPHANIE D. BLEW, P.E. — DATE
TX LIC NO. 92682

SEE DISCLAIMER FOR LIMITATIONS OF USE.

CONTRACT DOCUMENTS DATED JUNE 10, 2022, AS PART OF THE BIDDING DOCUMENTS (DRAWINGS AND SPECIFICATIONS) AND SUBSEQUENTLY ISSUED ADDENDA HAVE BEEN MERGED INTO ONE CONFORMING SET OF DOCUMENTS FOR THE CONVENIENCE OF THE CONTRACTOR. IF INCONSISTENCIES OR AMBIGUITIES BETWEEN "CONFORMED" DOCUMENTS AND CONTRACT DOCUMENTS ARE FOUND, THE CONTRACT DOCUMENTS SHALL GOVERN.

REV	DATE	BY	DESCRIPTION
			CONFORMED DOCUMENTS

DESIGNED SDB
DRAWN JF
CHECKED AR
DATE NOVEMBER 2022

** ORIGINAL SEALED BY STEPHANIE D. BLEW 05-13-22 TX PE 92682 **

CAS CONSULTING & SERVICES, INC.
CIVIL ENGINEERING | PROGRAM MANAGEMENT | CONSTRUCTION MANAGEMENT
7908 Cameron Road | Austin, TX 78754 | REG. NO. F-003572
Main: 512.836.2388 | Fax: 512.836.4153

carollo® TBPELS No. F-882

CITY OF AUSTIN — FOUNDED 1839

CITY OF AUSTIN

CITY OF AUSTIN
WILD HORSE RANCH WWTP EXPANSION
CIVIL
WATER QUALITY DETENTION POND NOTES AND CALCULATIONS

VERIFY SCALES
BAR IS ONE INCH ON ORIGINAL DRAWING
0 — 1"
IF NOT ONE INCH ON THIS SHEET, ADJUST SCALES ACCORDINGLY

JOB NO. 10976A.00
DRAWING NO. 00C07
SHEET NO. 238 OF 464

LAST SAVED BY: dseivert

PROJECT NO. 9585A10 FILE NAME: 9585A10_SheetSeed.dgn

SP-2022-1025C

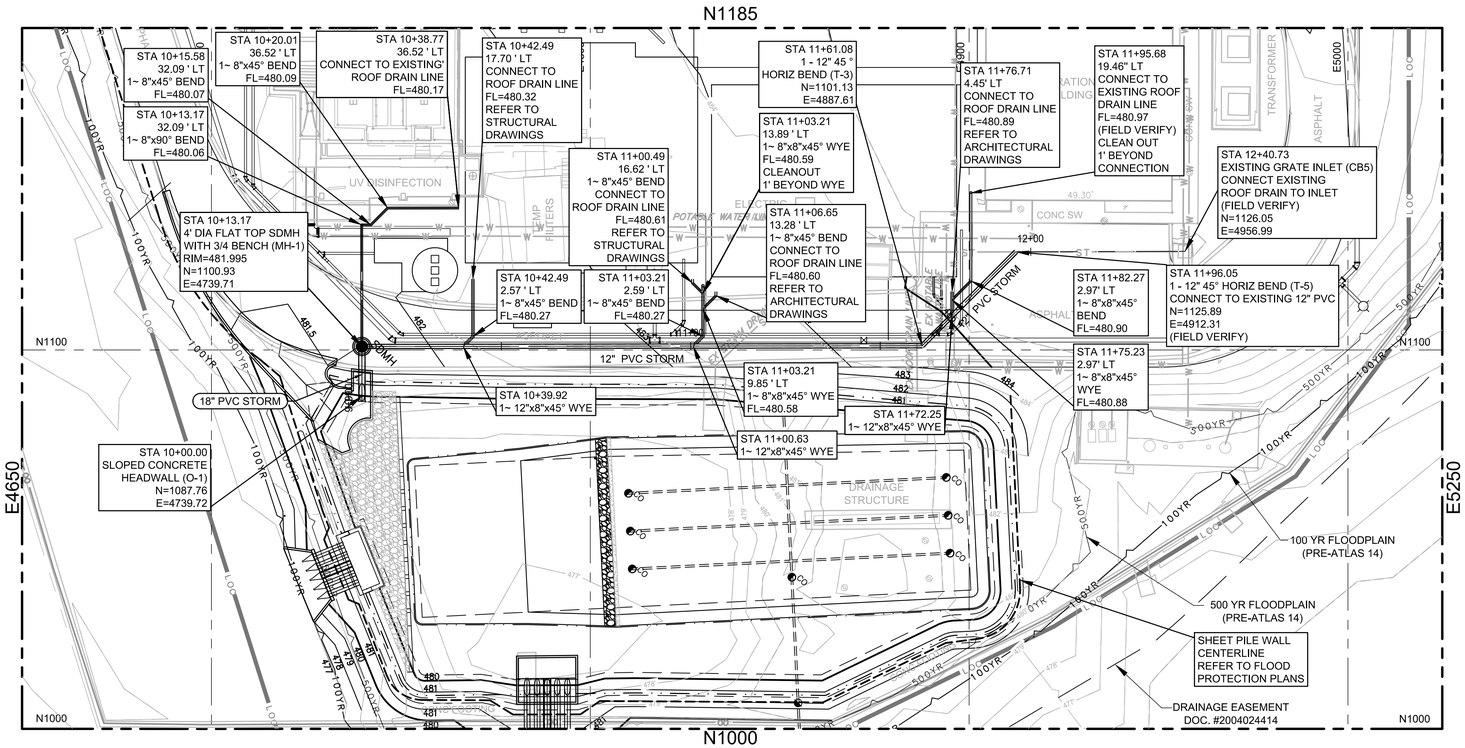

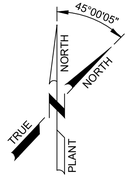

SCALE: 1" = 20'

LEGEND

- DRAINAGE EASEMENT
- EASEMENT LINES
- LIMITS OF CONSTRUCTION
- 500YR — 500 YEAR FLOOD PLAIN
- 100YR — 100 YEAR FLOOD PLAIN
- CWQZ — CRITICAL WATER QUALITY ZONE
- OHWM — ORDINARY HIGH WATER MARK
- W — W — EXISTING WATER LINE
- ST — EXISTING STORM LINE
- PROPOSED CLEANOUT
- PROPOSED CURB INLET
- PROPOSED STORM DRAIN LINE
- SDMH — PROPOSED STORM DRAIN MANHOLE
- POND UNDERDRAIN
- SHEET PILE WALL CENTERLINE
- GATE VALVE
- CHECK VALVE
- HEADWALL(S)
- DESIGN POINT

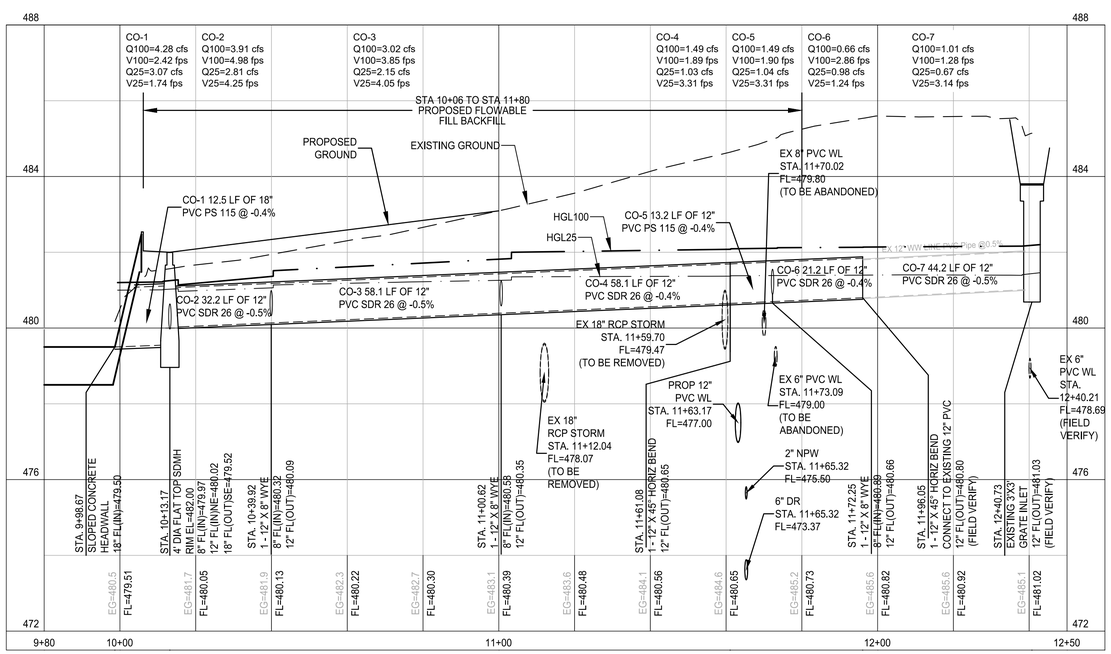

PROFILE LEGEND:	
EXISTING GROUND	— — —
PROPOSED GROUND	———
PROPOSED SD LINE	═══
25-YR HGL	— — —
100-YR HGL	— — —
25-YR WSEL	— · —
100-YR WSEL	— · —

PROFILE SCALE:
1"=20' HORIZONTAL
1"=2' VERTICAL

NOTES:

1. CONTRACTOR SHALL CONFIRM THE LOCATIONS OF ROOF DRAIN CONNECTIONS PRIOR TO CONSTRUCTION.

2. CONTRACTOR SHALL CONFIRM THE LOCATION OF EXISTING UNDERGROUND UTILITIES IN THE VICINITY OF PROPOSED STORM DRAIN IMPROVEMENTS PRIOR TO CONSTRUCTION.

3. CONTRACTOR SHALL MAINTAIN ON-SITE DRAINAGE PATTERNS DURING ALL PHASES OF CONSTRUCTION. THE PROPOSED POND OUTLETS SHALL BE KEPT INACTIVE UNTIL THE BACK FLOW PREVENTORS HAVE BEEN INSTALLED.

THIS CONFORMED DOCUMENT IS RELEASED FOR THE CONVENIENCE OF THE CONTRACTOR UNDER THE AUTHORITY OF:

Stephanie D Blew 11-01-22

STEPHANIE D. BLEW, P.E. DATE
TX LIC NO. 92682

SEE DISCLAIMER FOR LIMITATIONS OF USE.

CONTRACT DOCUMENTS DATED JUNE 10, 2022, AS PART OF THE BIDDING DOCUMENTS (DRAWINGS AND SPECIFICATIONS) AND SUBSEQUENTLY ISSUED ADDENDA HAVE BEEN MERGED INTO ONE CONFORMING SET OF DOCUMENTS FOR THE CONVENIENCE OF THE CONTRACTOR. IF INCONSISTENCIES OR AMBIGUITIES BETWEEN "CONFORMED" DOCUMENTS AND CONTRACT DOCUMENTS ARE FOUND, THE CONTRACT DOCUMENTS SHALL GOVERN.

LAST SAVED BY: dseivert

REV	DATE	BY	DESCRIPTION
			CONFORMED DOCUMENTS

DESIGNED SDB
DRAWN JF
CHECKED AR
DATE NOVEMBER 2022

** ORIGINAL SEALED BY STEPHANIE D. BLEW 02-28-22 TX PE 92682 **

CAS CONSULTING & SERVICES, INC.
CIVIL ENGINEERING | PROGRAM MANAGEMENT | CONSTRUCTION MANAGEMENT
7908 Cameron Road | Austin, TX 78754 | REG. NO. F-003572
Main: 512.836.2388 | Fax: 512.836.4515

carollo
TBPELS No. F-882

CITY OF AUSTIN
FOUNDED 1839

CITY OF AUSTIN

CITY OF AUSTIN
WILD HORSE RANCH WWTP EXPANSION
CIVIL
STORM DRAIN PLAN AND PROFILE

VERIFY SCALES
BAR IS ONE INCH ON ORIGINAL DRAWING
0 1"
IF NOT ONE INCH ON THIS SHEET, ADJUST SCALES ACCORDINGLY

JOB NO. 10976A.00
DRAWING NO. 00C08
SHEET NO. 239 OF 464

PROJECT NO. 9585A10 FILE NAME: 9585A10_SheetSeed.dgn

SP-2022-1025C

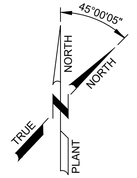

SCALE: 1" = 20'

LEGEND

- EXISTING
- PROPOSED
- XXX — FINISHED GRADE CONTOUR
- 100YR — 100 YEAR FLOODPLAIN
- 500YR — 500 YEAR FLOODPLAIN
- LOC — LOC — LIMITS OF CONSTRUCTION

NOTES:

1. REFERENCE DRAWING 00G06 FOR OVERALL WWTP SITE PLAN.
2. REFERENCE DRAWING 00G14 FOR ALL SURVEY CONTROL POINTS AND COORDINATES.
3. ACTUAL FIELD CONDITIONS MAY BE DIFFERENT FROM THOSE SHOWN IN THIS DRAWING. CONTRACTOR TO FIELD VERIFY INSTALLED CONDITIONS IMPACTING OR IMPACTED BY THIS WORK PRIOR TO INITIATING WORK.
4. ALL ACCESS WAYS AND DRIVEWAYS TO BE KEPT CLEAR TO ALLOW OPERATORS ACCESS TO ALL AREAS FOR MAINTENANCE AND EMERGENCIES. CONTRACTOR TO COORDINATE THE DELIVERY AND LOADING / UNLOADING OF EQUIPMENT WITH OWNER AT A MINIMUM OF 48 HOURS PRIOR TO DELIVERY.
5. CONTRACTOR TO NOT OBSTRUCT DELIVERIES ON THE PLANT ACCESS ROAD. WORK WITHIN THE ACCESS ROAD MUST BE DONE IN A WAY THAT CAN BE COVERED TO PROVIDE DELIVERY ACCESS. ACCESS ROAD CLOSURES MUST BE AGREED UPON WITH THE CITY OF AUSTIN IN ADVANCE.
6. CONTRACTOR SHALL NOT BLOCK DRAINAGE SWALES, DITCHES, CULVERTS, OR ANY OTHER STORM WATER DRAINAGE WAY AT ANY TIME DURING EXECUTION OF THE PROJECT. DAMAGE RESULTING FROM FLOODING DUE TO BLOCKED DRAINAGE WAYS WILL BE THE RESPONSIBILTY OF THE CONTRACTOR AT NO ADDITIONAL PAY.
7. SIDEWALKS TO BE CONSTRUCTED AT GRADE.

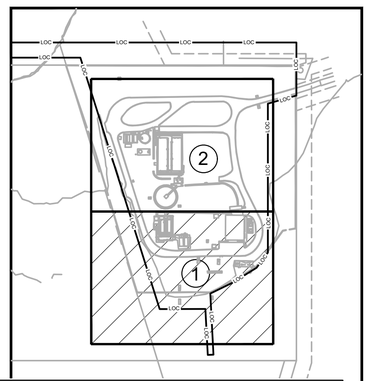

THIS CONFORMED DOCUMENT IS RELEASED FOR THE CONVENIENCE OF THE CONTRACTOR UNDER THE AUTHORITY OF:

CASEY G. WAUTERS, P.E.
TX LIC NO. 93889

11-01-22
DATE

SEE DISCLAIMER FOR LIMITATIONS OF USE.

CONTRACT DOCUMENTS DATED JUNE 10, 2022, AS PART OF THE BIDDING DOCUMENTS (DRAWINGS AND SPECIFICATIONS) AND SUBSEQUENTLY ISSUED ADDENDA HAVE BEEN MERGED INTO ONE CONFORMING SET OF DOCUMENTS FOR THE CONVENIENCE OF THE CONTRACTOR. IF INCONSISTENCIES OR AMBIGUITIES BETWEEN "CONFORMED" DOCUMENTS AND CONTRACT DOCUMENTS ARE FOUND, THE CONTRACT DOCUMENTS SHALL GOVERN.

REV	DATE	BY	DESCRIPTION
			CONFORMED DOCUMENTS

DESIGNED NL/CW
DRAWN AW
CHECKED SGE
DATE FEBRUARY 2022

** ORIGINAL SEALED BY CASEY G. WAUTERS, P.E. 2/28/2022 TX PE 93889 **

AECOM TECHNICAL SERVICES INC.
13640 BRIARWICK DRIVE, SUITE 200
AUSTIN, TEXAS 78729
WWW.AECOM.COM
TBPE REG. NO. F-3580

TBPE No. F-882

CITY OF AUSTIN

CITY OF AUSTIN
WILD HORSE RANCH WWTP EXPANSION
CIVIL
PAVING AND GRADING SITE PLAN
SHEET 1 OF 2

VERIFY SCALES
BAR IS ONE INCH ON ORIGINAL DRAWING
0 1"
IF NOT ONE INCH ON THIS SHEET, ADJUST SCALES ACCORDINGLY

JOB NO. 10976A.10
DRAWING NO. 01C01
SHEET NO. 240 OF 464

LAST SAVED BY:

PROJECT NO. 9585A10 FILE NAME: 9585A10_SheetSeed.dgn

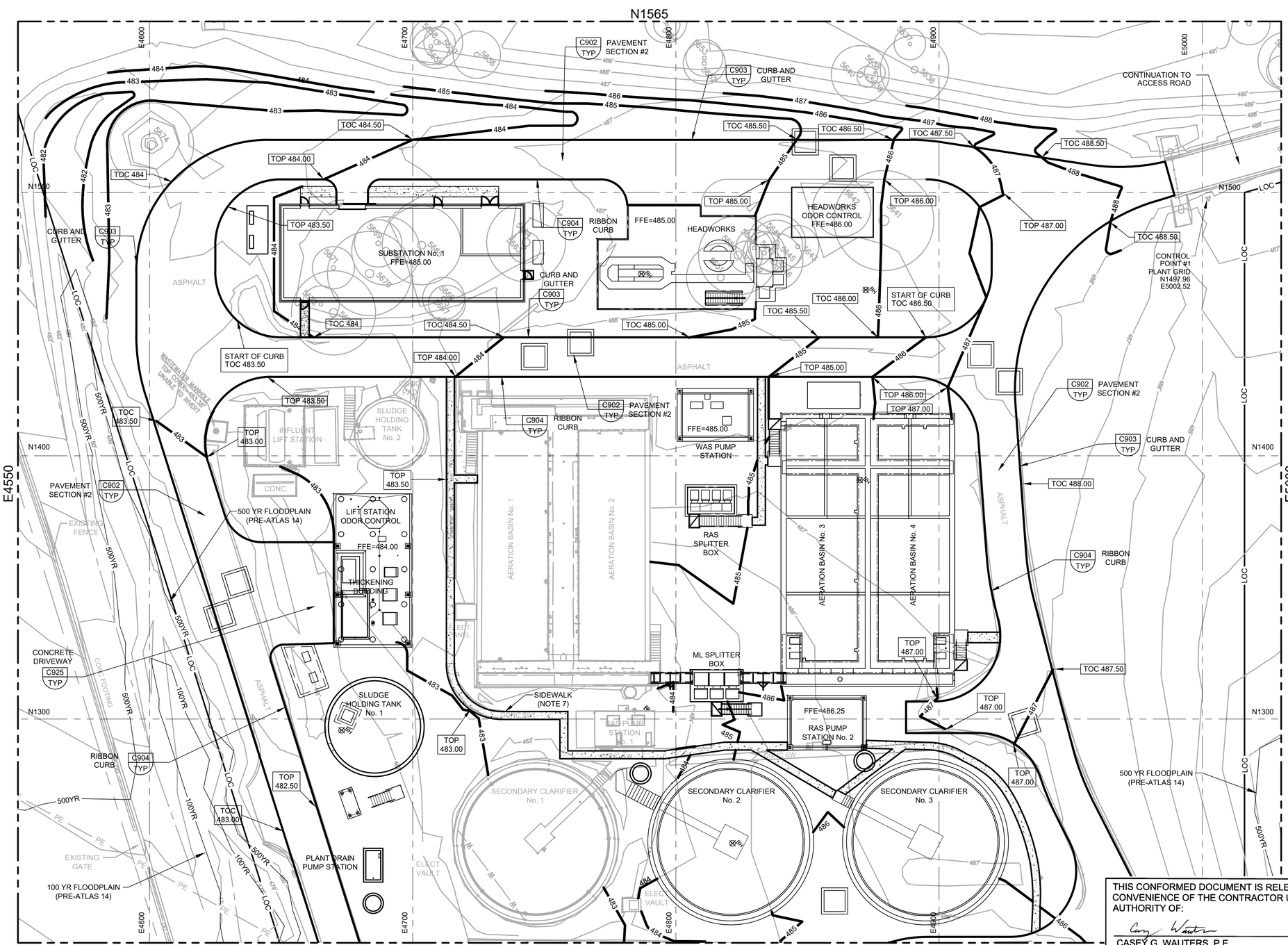

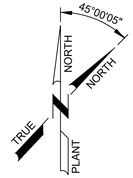

SCALE: 1" = 20'

LEGEND

- EXISTING
- PROPOSED
- XXX — FINISHED GRADE CONTOUR
- 100YR — 100 YEAR FLOODPLAIN
- 500YR — 500 YEAR FLOODPLAIN
- LOC — LOC — LIMITS OF CONSTRUCTION

NOTES:

1. REFERENCE DRAWING 00G06 FOR OVERALL WWTP SITE PLAN.
2. REFERENCE DRAWING 00G14 FOR ALL SURVEY CONTROL POINTS AND COORDINATES.
3. ACTUAL FIELD CONDITIONS MAY BE DIFFERENT FROM THOSE SHOWN IN THIS DRAWING. CONTRACTOR TO FIELD VERIFY INSTALLED CONDITIONS IMPACTING OR IMPACTED BY THIS WORK PRIOR TO INITIATING WORK.
4. ALL ACCESS WAYS AND DRIVEWAYS TO BE KEPT CLEAR TO ALLOW OPERATORS ACCESS TO ALL AREAS FOR MAINTENANCE AND EMERGENCIES. CONTRACTOR TO COORDINATE THE DELIVERY AND LOADING / UNLOADING OF EQUIPMENT WITH OWNER AT A MINIMUM OF 48 HOURS PRIOR TO DELIVERY.
5. CONTRACTOR TO NOT OBSTRUCT DELIVERIES ON THE PLANT ACCESS ROAD. WORK WITHIN THE ACCESS ROAD MUST BE DONE IN A WAY THAT CAN BE COVERED TO PROVIDE DELIVERY ACCESS. ACCESS ROAD CLOSURES MUST BE AGREED UPON WITH THE CITY OF AUSTIN IN ADVANCE.
6. CONTRACTOR SHALL NOT BLOCK DRAINAGE SWALES, DITCHES, CULVERTS, OR ANY OTHER STORM WATER DRAINAGE WAY AT ANY TIME DURING EXECUTION OF THE PROJECT. DAMAGE RESULTING FROM FLOODING DUE TO BLOCKED DRAINAGE WAYS WILL BE THE RESPONSIBILTY OF THE CONTRACTOR AT NO ADDITIONAL PAY.
7. SIDEWALKS TO BE CONSTRUCTED AT GRADE.

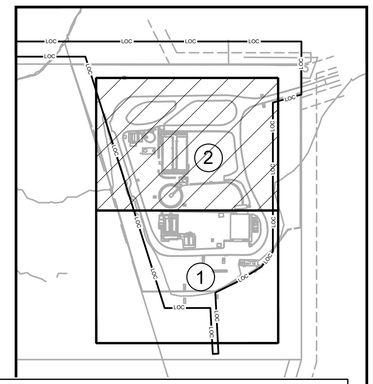

THIS CONFORMED DOCUMENT IS RELEASED FOR THE CONVENIENCE OF THE CONTRACTOR UNDER THE AUTHORITY OF:

CASEY G. WAUTERS, P.E.
TX LIC NO. 93889

11-01-22
DATE

SEE DISCLAIMER FOR LIMITATIONS OF USE.

CONTRACT DOCUMENTS DATED JUNE 10, 2022, AS PART OF THE BIDDING DOCUMENTS (DRAWINGS AND SPECIFICATIONS) AND SUBSEQUENTLY ISSUED ADDENDA HAVE BEEN MERGED INTO ONE CONFORMING SET OF DOCUMENTS FOR THE CONVENIENCE OF THE CONTRACTOR. IF INCONSISTENCIES OR AMBIGUITIES BETWEEN "CONFORMED" DOCUMENTS AND CONTRACT DOCUMENTS ARE FOUND, THE CONTRACT DOCUMENTS SHALL GOVERN.

REV	DATE	BY	DESCRIPTION
			CONFORMED DOCUMENTS

DESIGNED NL/CW
DRAWN AW
CHECKED SGE
DATE FEBRUARY 2022

** ORIGINAL SEALED BY CASEY G. WAUTERS, P.E. 2/28/2022 TX PE 93889 **

AECOM TECHNICAL SERVICES INC.
13640 BRIARWICK DRIVE, SUITE 200
AUSTIN, TEXAS 78729
WWW.AECOM.COM
TBPE REG. NO. F-3580

TBPE No. F-882

CITY OF AUSTIN

CITY OF AUSTIN
WILD HORSE RANCH WWTP EXPANSION
CIVIL
PAVING AND GRADING SITE PLAN
SHEET 2 OF 2

VERIFY SCALES
BAR IS ONE INCH ON ORIGINAL DRAWING
0 1"
IF NOT ONE INCH ON THIS SHEET, ADJUST SCALES ACCORDINGLY

JOB NO. 10976A.10
DRAWING NO. 01C02
SHEET NO. 241 OF 464

LAST SAVED BY:

PROJECT NO. 9585A10 FILE NAME: 9585A10_SheetSeed.dgn

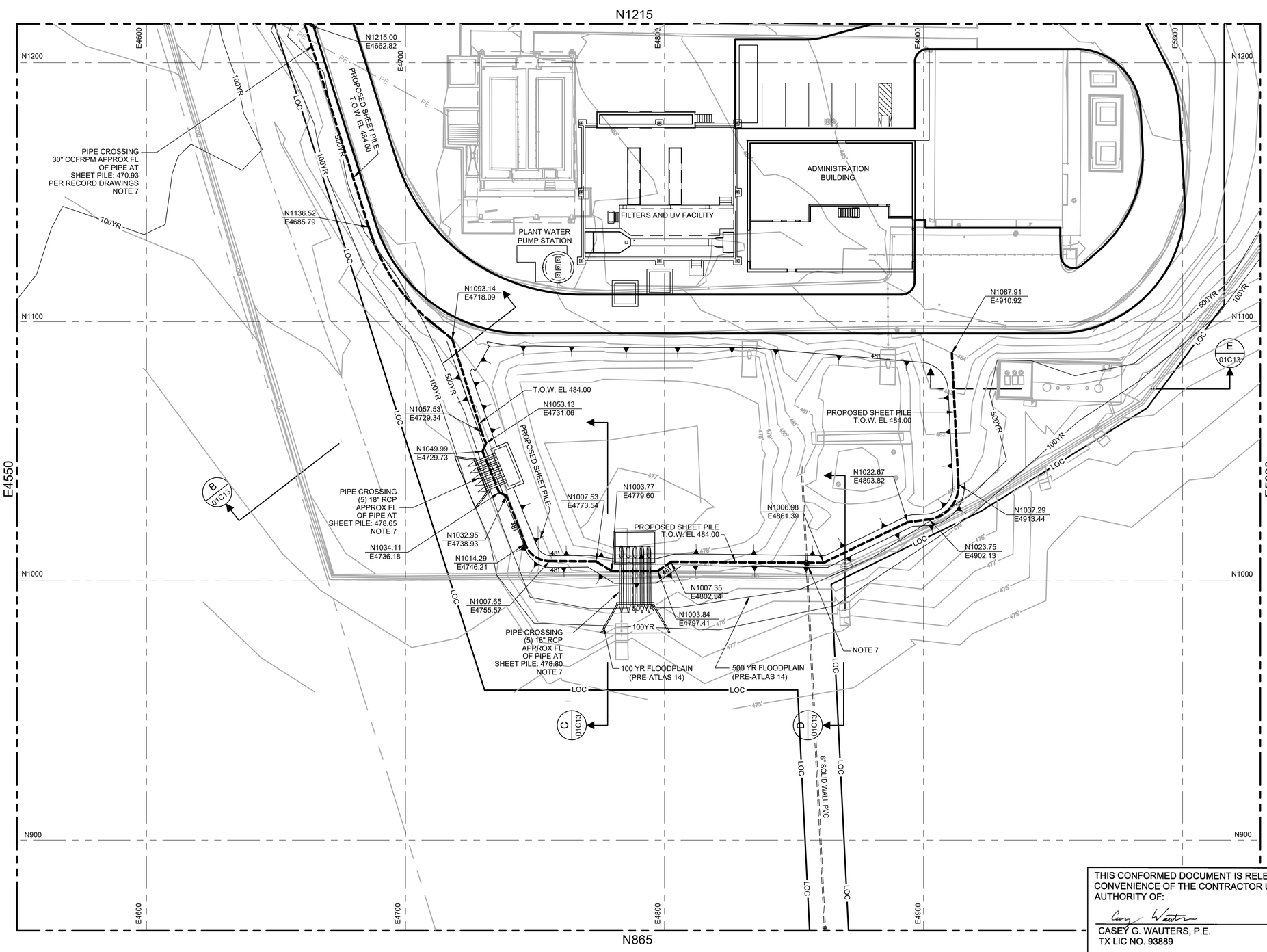

45°00'05"
NORTH
NORTH
TRUE
PLANT

SCALE: 1" = 20'

LEGEND

- EXISTING
- PROPOSED
- SHEET PILE
- 100YR — 100 YEAR FLOODPLAIN
- 500YR — 500 YEAR FLOODPLAIN
- LOC — LOC — LIMITS OF CONSTRUCTION

NOTES:

1. REFERENCE DRAWING 00G06 FOR OVERALL WWTP SITE PLAN.
2. REFERENCE DRAWING 00G14 FOR ALL SURVEY CONTROL POINTS AND COORDINATES.
3. ACTUAL FIELD CONDITIONS MAY BE DIFFERENT FROM THOSE SHOWN IN THIS DRAWING. CONTRACTOR TO FIELD VERIFY INSTALLED CONDITIONS IMPACTING OR IMPACTED BY THIS WORK PRIOR TO INITIATING WORK.
4. ALL ACCESS WAYS AND DRIVEWAYS TO BE KEPT CLEAR TO ALLOW OPERATORS ACCESS TO ALL AREAS FOR MAINTENANCE AND EMERGENCIES. CONTRACTOR TO COORDINATE THE DELIVERY AND LOADING / UNLOADING OF EQUIPMENT WITH OWNER AT A MINIMUM OF 48 HOURS PRIOR TO DELIVERY.
5. CONTRACTOR TO NOT OBSTRUCT DELIVERIES ON THE PLANT ACCESS ROAD. WORK WITHIN THE ACCESS ROAD MUST BE DONE IN A WAY THAT CAN BE COVERED TO PROVIDE DELIVERY ACCESS. ACCESS ROAD CLOSURES MUST BE AGREED UPON WITH THE CITY OF AUSTIN IN ADVANCE.
6. CONTRACTOR SHALL NOT BLOCK DRAINAGE SWALES, DITCHES, CULVERTS, OR ANY OTHER STORM WATER DRAINAGE WAY AT ANY TIME DURING EXECUTION OF THE PROJECT. DAMAGE RESULTING FROM FLOODING DUE TO BLOCKED DRAINAGE WAYS WILL BE THE RESPONSIBILITY OF THE CONTRACTOR AT NO ADDITIONAL PAY.
7. CONTRACTOR SHALL COORDINATE WITH SHEET PILE MANUFACTURER TO PROVIDE A DESIGN SUBMITTAL FOR REVIEW BY THE OWNER/ENGINEER THAT DEFINES THE METHOD OF INCORPORATING THE PROPOSED PIPE CROSSINGS THROUGH THE SHEET PILE AT THE LOCATIONS SHOWN ON THE DRAWING. DESIGN SHALL BE PREPARED AND SEALED BY A REGISTERED PROFESSIONAL ENGINEER IN THE STATE OF TEXAS.

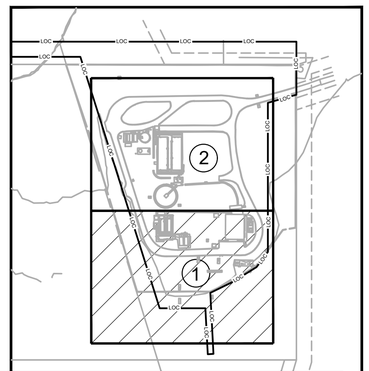

THIS CONFORMED DOCUMENT IS RELEASED FOR THE CONVENIENCE OF THE CONTRACTOR UNDER THE AUTHORITY OF:

CASEY G. WAUTERS, P.E.
TX LIC NO. 93889

11-01-22
DATE

SEE DISCLAIMER FOR LIMITATIONS OF USE.

CONTRACT DOCUMENTS DATED JUNE 10, 2022, AS PART OF THE BIDDING DOCUMENTS (DRAWINGS AND SPECIFICATIONS) AND SUBSEQUENTLY ISSUED ADDENDA HAVE BEEN MERGED INTO ONE CONFORMING SET OF DOCUMENTS FOR THE CONVENIENCE OF THE CONTRACTOR. IF INCONSISTENCIES OR AMBIGUITIES BETWEEN "CONFORMED" DOCUMENTS AND CONTRACT DOCUMENTS ARE FOUND, THE CONTRACT DOCUMENTS SHALL GOVERN.

REV	DATE	BY	DESCRIPTION
			CONFORMED DOCUMENTS

DESIGNED CW
DRAWN AW
CHECKED SGE
DATE FEBRUARY 2022

**
ORIGINAL
SEALED BY
CASEY G. WAUTERS, P.E.
2/28/2022
TX PE 93889
**

AECOM TECHNICAL SERVICES INC.
13640 BRIARWICK DRIVE, SUITE 200
AUSTIN, TEXAS 78729
WWW.AECOM.COM
TBPE REG. NO. F-3580

carollo
TBPE No. F-882

CITY OF AUSTIN
FOUNDED 1839

CITY OF AUSTIN

CITY OF AUSTIN
WILD HORSE RANCH WWTP EXPANSION
CIVIL
FLOOD PROTECTION LAYOUT
SHEET 1 OF 2

VERIFY SCALES
BAR IS ONE INCH ON ORIGINAL DRAWING
0 — 1"
IF NOT ONE INCH ON THIS SHEET, ADJUST SCALES ACCORDINGLY

JOB NO. 10976A.10
DRAWING NO. 01C10
SHEET NO. 242 OF 464

LAST SAVED BY: dsievert

PROJECT NO. 9585A10 FILE NAME: 9585A10_SheetSeed.dgn

N1565

N1215

E4550

E5030

E4600 E4700 E4800 E4900 E5000

N1500 N1400 N1300

SUBSTATION No. 1

HEADWORKS

HEADWORKS ODOR CONTROL

WASTEWATER MANHOLE TOP ELEV=483.36 UNABLE TO INVERT

N1417.89
E4598.70

500 YR FLOODPLAIN (PRE-ATLAS 14)

LIFT STATION ODOR CONTROL

THICKENING BUILDING

WAS PUMP STATION

RAS SPLITTER BOX

AERATION BASIN No. 3

AERATION BASIN No. 4

ML SPLITTER BOX

RAS PUMP STATION No. 2

SLUDGE HOLDING TANK No. 1

SECONDARY CLARIFIER No. 2

SECONDARY CLARIFIER No. 3

N1260.60
E4645.37

PROPOSED SHEET PILE
T.O.W. EL 484.00

A
01C13

PLANT DRAIN PUMP STATION

N1215.00
E4662.82

100 YR FLOODPLAIN (PRE-ATLAS 14)

500 YR FLOODPLAIN (PRE-ATLAS 14)

45°00'05"
NORTH
NORTH
TRUE
PLANT

SCALE: 1" = 20'

LEGEND

- EXISTING
- PROPOSED
- SHEET PILE
- 100YR — 100 YEAR FLOODPLAIN
- 500YR — 500 YEAR FLOODPLAIN
- LOC — LOC — LIMITS OF CONSTRUCTION

NOTES:

1. REFERENCE DRAWING 00G06 FOR OVERALL WWTP SITE PLAN.
2. REFERENCE DRAWING 00G14 FOR ALL SURVEY CONTROL POINTS AND COORDINATES.
3. ACTUAL FIELD CONDITIONS MAY BE DIFFERENT FROM THOSE SHOWN IN THIS DRAWING. CONTRACTOR TO FIELD VERIFY INSTALLED CONDITIONS IMPACTING OR IMPACTED BY THIS WORK PRIOR TO INITIATING WORK.
4. ALL ACCESS WAYS AND DRIVEWAYS TO BE KEPT CLEAR TO ALLOW OPERATORS ACCESS TO ALL AREAS FOR MAINTENANCE AND EMERGENCIES. CONTRACTOR TO COORDINATE THE DELIVERY AND LOADING / UNLOADING OF EQUIPMENT WITH OWNER AT A MINIMUM OF 48 HOURS PRIOR TO DELIVERY.
5. CONTRACTOR TO NOT OBSTRUCT DELIVERIES ON THE PLANT ACCESS ROAD. WORK WITHIN THE ACCESS ROAD MUST BE DONE IN A WAY THAT CAN BE COVERED TO PROVIDE DELIVERY ACCESS. ACCESS ROAD CLOSURES MUST BE AGREED UPON WITH THE CITY OF AUSTIN IN ADVANCE.
6. CONTRACTOR SHALL NOT BLOCK DRAINAGE SWALES, DITCHES, CULVERTS, OR ANY OTHER STORM WATER DRAINAGE WAY AT ANY TIME DURING EXECUTION OF THE PROJECT. DAMAGE RESULTING FROM FLOODING DUE TO BLOCKED DRAINAGE WAYS WILL BE THE RESPONSIBILITY OF THE CONTRACTOR AT NO ADDITIONAL PAY.

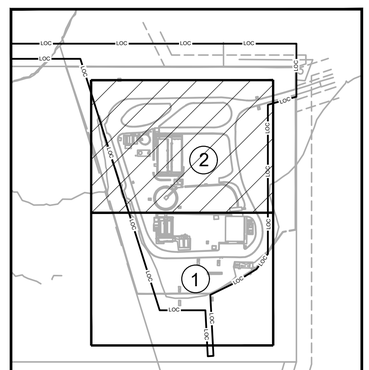

THIS CONFORMED DOCUMENT IS RELEASED FOR THE CONVENIENCE OF THE CONTRACTOR UNDER THE AUTHORITY OF:

CASEY G. WAUTERS, P.E.
TX LIC NO. 93889

11-01-22
DATE

SEE DISCLAIMER FOR LIMITATIONS OF USE.

CONTRACT DOCUMENTS DATED JUNE 10, 2022, AS PART OF THE BIDDING DOCUMENTS (DRAWINGS AND SPECIFICATIONS) AND SUBSEQUENTLY ISSUED ADDENDA HAVE BEEN MERGED INTO ONE CONFORMING SET OF DOCUMENTS FOR THE CONVENIENCE OF THE CONTRACTOR. IF INCONSISTENCIES OR AMBIGUITIES BETWEEN "CONFORMED" DOCUMENTS AND CONTRACT DOCUMENTS ARE FOUND, THE CONTRACT DOCUMENTS SHALL GOVERN.

REV	DATE	BY	DESCRIPTION
			CONFORMED DOCUMENTS

DESIGNED CW
DRAWN AW
CHECKED SGE
DATE FEBRUARY 2022

**
ORIGINAL
SEALED BY
CASEY G. WAUTERS, P.E.
2/28/2022
TX PE 93889
**

AECOM TECHNICAL SERVICES INC.
13640 BRIARWICK DRIVE, SUITE 200
AUSTIN, TEXAS 78729
WWW.AECOM.COM
TBPE REG. NO. F-3580

TBPE No. F-882

CITY OF AUSTIN

CITY OF AUSTIN
WILD HORSE RANCH WWTP EXPANSION
CIVIL
FLOOD PROTECTION LAYOUT
SHEET 2 OF 2

VERIFY SCALES
BAR IS ONE INCH ON ORIGINAL DRAWING
0 1"
IF NOT ONE INCH ON THIS SHEET, ADJUST SCALES ACCORDINGLY

JOB NO. 10976A.10
DRAWING NO. 01C11
SHEET NO. 243 OF 464

LAST SAVED BY: dselvert

PROJECT NO. 9585A10 FILE NAME: 9585A10_SheetSeed.dgn

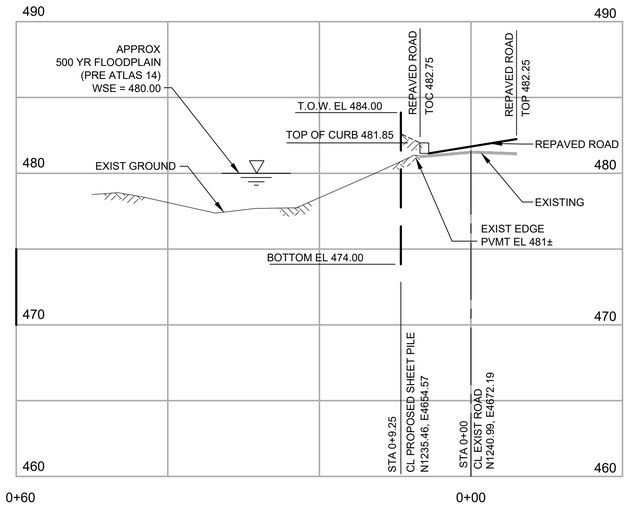

A SECTION

01C11

SCALE: 1" = 10' HORIZ. & 1" = 5' VERT.
FILE:

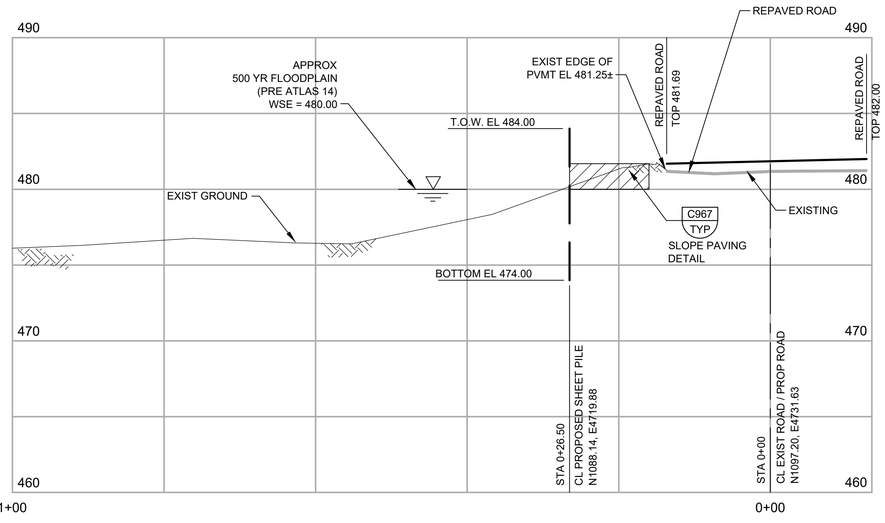

B SECTION

01C10

SCALE: 1" = 10' HORIZ. & 1" = 5' VERT.
FILE:

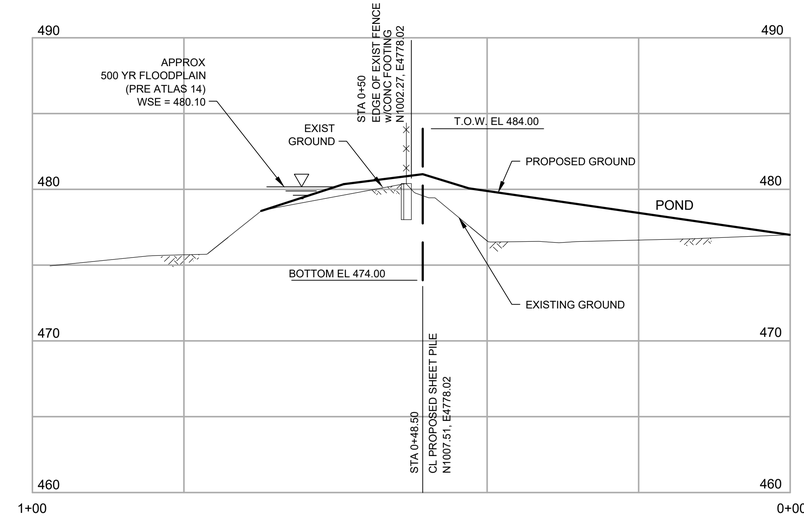

C SECTION

01C10

SCALE: 1" = 10' HORIZ. & 1" = 5' VERT.
FILE:

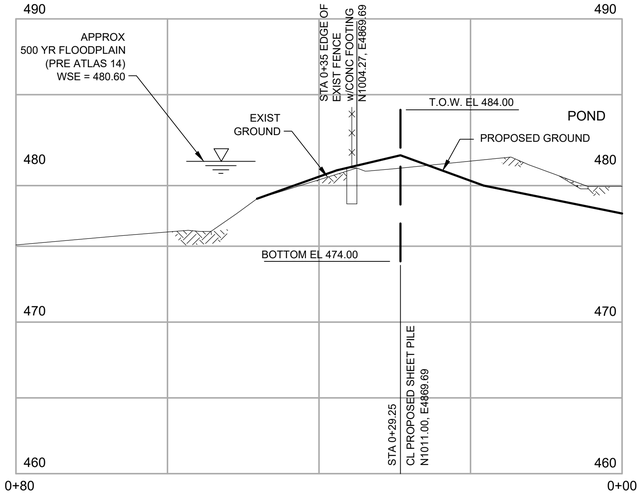

D SECTION

01C10

SCALE: 1" = 10' HORIZ. & 1" = 5' VERT.
FILE:

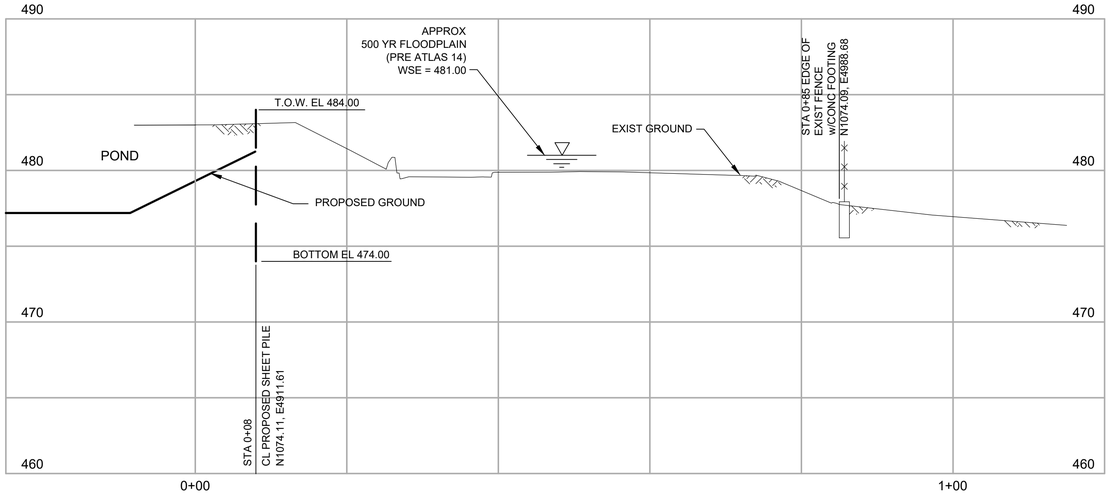

E SECTION

01C10

SCALE: 1" = 10' HORIZ. & 1" = 5' VERT.
FILE:

THIS CONFORMED DOCUMENT IS RELEASED FOR THE CONVENIENCE OF THE CONTRACTOR UNDER THE AUTHORITY OF:

CASEY G. WAUTERS, P.E.
TX LIC NO. 93889

11-01-22
DATE

SEE DISCLAIMER FOR LIMITATIONS OF USE.

CONTRACT DOCUMENTS DATED JUNE 10, 2022, AS PART OF THE BIDDING DOCUMENTS (DRAWINGS AND SPECIFICATIONS) AND SUBSEQUENTLY ISSUED ADDENDA HAVE BEEN MERGED INTO ONE CONFORMING SET OF DOCUMENTS FOR THE CONVENIENCE OF THE CONTRACTOR. IF INCONSISTENCIES OR AMBIGUITIES BETWEEN "CONFORMED" DOCUMENTS AND CONTRACT DOCUMENTS ARE FOUND, THE CONTRACT DOCUMENTS SHALL GOVERN.

REV	DATE	BY	DESCRIPTION
			CONFORMED DOCUMENTS

DESIGNED CW
DRAWN AW
CHECKED SGE
DATE FEBRUARY 2022

**
ORIGINAL
SEALED BY
CASEY G. WAUTERS, P.E.
2/28/2022
TX PE 93889
**

AECOM TECHNICAL SERVICES INC.
13640 BRIARWICK DRIVE, SUITE 200
AUSTIN, TEXAS 78729
WWW.AECOM.COM
TBPE REG. NO. F-3580

TBPE No. F-882

CITY OF AUSTIN

CITY OF AUSTIN
WILD HORSE RANCH WWTP EXPANSION
CIVIL
FLOOD PROTECTION SECTIONS

VERIFY SCALES
BAR IS ONE INCH ON ORIGINAL DRAWING
0 1"
IF NOT ONE INCH ON THIS SHEET, ADJUST SCALES ACCORDINGLY

JOB NO. 10976A.10
DRAWING NO. 01C13
SHEET NO. 244 OF 464

LAST SAVED BY: dseivert

PROJECT NO. 9585A10 FILE NAME: 9585A10_SheetSeed.dgn

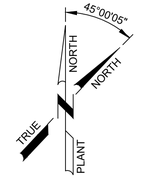

SCALE: 1" = 20'

LEGEND

- EXISTING
- PROPOSED
- 100YR — 100 YEAR FLOODPLAIN
- 500YR — 500 YEAR FLOODPLAIN
- LOC — LOC — LIMITS OF CONSTRUCTION
- X / XX — PROFILE NUMBER / DRAWING NUMBER PROFILE IS ON

NOTES:

1. REFERENCE DRAWING 00G06 FOR OVERALL WWTP SITE PLAN.
2. REFERENCE DRAWING 00G14 FOR ALL SURVEY CONTROL POINTS AND COORDINATES.
3. EXISTING UTILITY INFORMATION, SHOWN AS BACKGROUND IN THE PLAN VIEW, WAS OBTAINED FROM AVAILABLE RECORD DRAWINGS FROM A PREVIOUS PROJECT WHICH MAY NOT BE COMPLETE OR ACCURATE. IT IS INTENDED TO PROVIDE BASIC INFORMATION ON EXISTING FACILITIES. CONTRACTOR IS RESPONSIBLE FOR FIELD VERIFYING THE LOCATION AND ELEVATION OF EXISTING UTILITIES PRIOR TO CONSTRUCTION.
4. PROVIDE 16" TEE WITH BFV FOR CONNECTION OF TEMPORARY AIR PIPING DURING CONSTRUCTION. BFV SHALL BE CAPPED OR BLIND FLANGED ONCE NEW AIR LINE IS IN SERVICE. REMOVE VALVE OPERATOR FROM ROADWAY. REFER TO SPECIFICATION SECTION 01140 FOR WORK RESTRICTIONS.

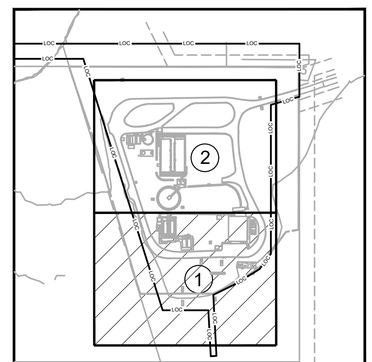

THIS CONFORMED DOCUMENT IS RELEASED FOR THE CONVENIENCE OF THE CONTRACTOR UNDER THE AUTHORITY OF:

CASEY G. WAUTERS, P.E.
TX LIC NO. 93889

11-01-22
DATE

SEE DISCLAIMER FOR LIMITATIONS OF USE.

CONTRACT DOCUMENTS DATED JUNE 10, 2022, AS PART OF THE BIDDING DOCUMENTS (DRAWINGS AND SPECIFICATIONS) AND SUBSEQUENTLY ISSUED ADDENDA HAVE BEEN MERGED INTO ONE CONFORMING SET OF DOCUMENTS FOR THE CONVENIENCE OF THE CONTRACTOR. IF INCONSISTENCIES OR AMBIGUITIES BETWEEN "CONFORMED" DOCUMENTS AND CONTRACT DOCUMENTS ARE FOUND, THE CONTRACT DOCUMENTS SHALL GOVERN.

REV	DATE	BY	DESCRIPTION
			CONFORMED DOCUMENTS

DESIGNED NL/CW
DRAWN AW
CHECKED SGE
DATE MAY 2022

**
ORIGINAL
SEALED BY
CASEY G. WAUTERS, P.E.
5/9/2022
TX PE 93889
**

AECOM TECHNICAL SERVICES INC.
13640 BRIARWICK DRIVE, SUITE 200
AUSTIN, TEXAS 78729
WWW.AECOM.COM
TBPE REG. NO. F-3580

carollo
TBPE No. F-882

CITY OF AUSTIN

CITY OF AUSTIN
WILD HORSE RANCH WWTP EXPANSION
CIVIL
YARD PIPING SITE PLAN
SHEET 1 OF 3

VERIFY SCALES
BAR IS ONE INCH ON ORIGINAL DRAWING
0 — 1"
IF NOT ONE INCH ON THIS SHEET, ADJUST SCALES ACCORDINGLY

JOB NO. 10976A.10
DRAWING NO. 02C01
SHEET NO. 245 OF 464

LAST SAVED BY: dselvert

PROJECT NO. 9585A10 FILE NAME: 9585A10_SheetSeed.dgn

N1565

NOTE 4

2" POTABLE WATER LINE REF SHEET 04C01 FOR CONTINUATION

12" NON-POTABLE FIRE WATER LINE REF SHEET 04C01 FOR CONTINUATION

45° BEND N1529.00 E4623.76

12" TEE N1526.00 E4633.68

45° BEND N1526.00 E4623.76

27 02C30

27 02C28

12" GATE VALVE

2" POTABLE WATER

12" NON-POTABLE FIRE WATER LINE

90° BEND N1485.33 E4833.67

45° BEND N1485.33 E4838.17

N1502.00 E4844.00

90° BEND N1526.00 E4941.23

90° BEND N1529.00 E4944.23

45° BEND N1477.50 E4846.00

4 02C21

90° BEND N1472.00 E4854.92

END YARD PIPING N1478.00 E4863.67

HEADWORKS ODOR CONTROL

5 02C21

45° BEND N1477.50 E4874.00

12"x6" TEE N1459.61 E4941.23

45° BEND N1460.58 E4890.92

6" WYE N1428.00 E4869.00

6"

FH

45° BEND N1428.00 E4872.50

18 02C24

90° BEND N1424.00 E4878.92

END YARD PIPING N1419.00 E4890.92

N1500

N1495.00 E4637.00

N1495.00 E4650.00

SUBSTATION No. 1

N1482.50 E4770.00

HEADWORKS END PIPING CAP N1450.00 E4848.50

90° BEND N1467.50 E4847.00

90° BEND N1450.00 E4669.55

END OF YARD PIPING N1427.07 E4669.55

1 02C20

18" RI

6" PD

6" DR

4" NPW

12" SI

4" DR

END YARD PIPING N1472.00 E4845.92

45° BEND N1455.75 E4863.67

2" TEE N1453.00 E4854.17

45° BEND N1451.75 E4859.67

90° BEND N1447.00 E4847.00

4" PVC

NOTE 5

8" RAS

4" WAS

6" NPW

90° BEND N1397.96 E4675.18

CONNECT TO EXIST LINE N1397.96 E4671.21

SLUDGE HOLDING TANK No. 2

END YARD PIPING 22.5° BEND N1400.30 E4625.25 NOTE 6

WAS PUMP STATION

45° BEND N1425.83 E4871.17

END YARD PIPING N1429.00 E4854.17

90° BEND N1419.00 E4866.92

45° BEND N1425.83 E4874.67

36 02C38

END PIPING CAP N1422.00 E4848.50

END YARD PIPING N1419.00 E4854.92

17 02C24

END YARD PIPING N1418.75 E4874.67

27 02C29

11.25° BEND N1362.48 E4941.31

N1400

E4550

E5030

35 02C38

EXISTING FENCE

12"x6" TEE N1379.82 E4633.68

90° BEND N1391.50 E4667.25

90° BEND END OF YARD PIPING N1391.50 E4683.13

90° BEND END YARD PIPING N1388.00 E4675.18

END YARD PIPING N1374.92 E4667.25

LIFT STATION ODOR CONTROL

CONC.

FH

4" TWAS

6" NPW

4" WAS

6" DR

THICKENING BUILDING

RAS SPLITTER BOX

13 02C23

14 02C23

AERATION BASIN No. 3

AERATION BASIN No. 4

END YARD PIPING N1321.00 E4837.00

END YARD PIPING N1315.18 E4907.57

22.5° BEND N1374.73 E4633.68

500 YR FLOODPLAIN (PRE-ATLAS 14)

3 02C12

2 02C11

TEE N1321.00 E4800.00

8" RAS

10" RAS

4" NPW

24" ML

ML SPLITTER BOX

18" ML

45° BEND N1293.43 E4907.57

90° BEND (WEST) N1311.68 E4910.92

11.25° BEND N1311.75 E4955.20

45° BEND N1294.00 E4910.92

22.5° BEND N1331.41 E4944.23

12" NON-POTABLE FIRE WATER LINE

2" POTABLE WATER

N1300

47° HPI DEFLECTION N1378.15 E4651.63

SLUDGE HOLDING TANK No. 1

END YARD PIPING N1278.00 E4709.25

CONC SW

RAS PUMP STATION No. 1

RAS PUMP STATION No. 2

45° BEND N1271.00 E4930.00

45° BEND N1271.57 E4933.35

16" AIR

2" ALUM

6" RAS

500 YR FLOODPLAIN (PRE-ATLAS 14)

SECONDARY CLARIFIER No. 1

SECONDARY CLARIFIER No. 2

SECONDARY CLARIFIER No. 3

N1253.35 E4820.85

22.5° BEND N1270.71 E4852.96

90° BEND END YARD PIPING N1265.00 E4861.00

N1253.35 E4894.85

45° BEND N1242.73 E4930.00

END YARD PIPING N1265.40 E4865.75

END YARD PIPING N1220.00 E4907.27

45° BEND N1220.00 E4894.85

45° BEND N1217.00 E4891.85

45° BEND N1242.73 E4933.35

25 02C27

END YARD PIPING/45° BEND N1217.00 E4907.62

10 02C22

T.O.W. 487.19 (TYP)

GEN. TRAILER

PLANT DRAIN PUMP STATION

ELEC VAULT

45° BEND N1217.00 E4820.85

45° BEND N1217.00 E4825.50

12" DR

6" PD

6" DR

16" SE

18" SE

21 02C25

22 02C25

N1215

5 02C14

100 YR FLOODPLAIN (PRE-ATLAS 14)

EXISTING GATE

CONC FOOTING

PE

LOC

500YR

100YR

45°00'05"

NORTH

TRUE

PLANT

LEGEND

SCALE: 1" = 20'

- EXISTING
- PROPOSED
- 100YR — 100 YEAR FLOODPLAIN
- 500YR — 500 YEAR FLOODPLAIN
- LOC — LOC — LIMITS OF CONSTRUCTION
- X / XX — PROFILE NUMBER / DRAWING NUMBER PROFILE IS ON

NOTES:

1. REFERENCE DRAWING 00G06 FOR OVERALL WWTP SITE PLAN.
2. REFERENCE DRAWING 00G14 FOR ALL SURVEY CONTROL POINTS AND COORDINATES.
3. EXISTING UTILITY INFORMATION, SHOWN AS BACKGROUND IN THE PLAN VIEW, WAS OBTAINED FROM AVAILABLE RECORD DRAWINGS FROM A PREVIOUS PROJECT WHICH MAY NOT BE COMPLETE OR ACCURATE. IT IS INTENDED TO PROVIDE BASIC INFORMATION ON EXISTING FACILITIES. CONTRACTOR IS RESPONSIBLE FOR FIELD VERIFYING THE LOCATION AND ELEVATION OF EXISTING UTILITIES PRIOR TO CONSTRUCTION.
4. THIS PIPE CONNECTS TO 45 DEGREE BEND LOCATED AT NAD 83 COORDINATES N10090251.27, E3168598.34.
5. INSTALL 4" PVC APPROXIMATELY 4' BELOW GRADE FOR POTENTIAL FUTURE USE OF ALKALINITY ADDITION BETWEEN CARBON SLAB AND HEADWORKS. BRING ENDS TO SURFACE AND CAP AT SURFACE.
6. CORE HOLE IN EXISTING MANHOLE AND PROVIDE WATERTIGHT CONNECTION FOR 6" OVERFLOW PER CITY OF AUSTIN STANDARD PRODUCT LIST SPL WW-146D.

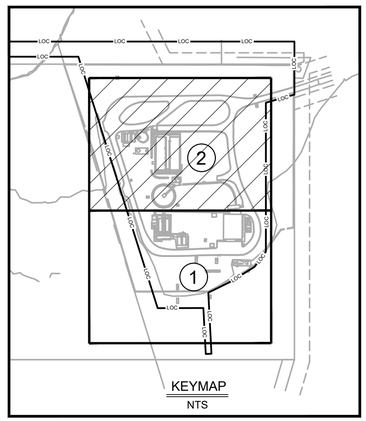

THIS CONFORMED DOCUMENT IS RELEASED FOR THE CONVENIENCE OF THE CONTRACTOR UNDER THE AUTHORITY OF:

CASEY G. WAUTERS, P.E. — 11-01-22 DATE

TX LIC NO. 93889

SEE DISCLAIMER FOR LIMITATIONS OF USE.

CONTRACT DOCUMENTS DATED JUNE 10, 2022, AS PART OF THE BIDDING DOCUMENTS (DRAWINGS AND SPECIFICATIONS) AND SUBSEQUENTLY ISSUED ADDENDA HAVE BEEN MERGED INTO ONE CONFORMING SET OF DOCUMENTS FOR THE CONVENIENCE OF THE CONTRACTOR. IF INCONSISTENCIES OR AMBIGUITIES BETWEEN "CONFORMED" DOCUMENTS AND CONTRACT DOCUMENTS ARE FOUND, THE CONTRACT DOCUMENTS SHALL GOVERN.

REV	DATE	BY	DESCRIPTION
1	09/07/22	CW	ADDENDUM No. 5

CONFORMED DOCUMENTS

DESIGNED NL/CW
DRAWN AW
CHECKED SGE
DATE SEPTEMBER 2022

** ORIGINAL SEALED BY CASEY G. WAUTERS, P.E. 9/7/2022 TX PE 93889 **

AECOM TECHNICAL SERVICES INC. 13640 BRIARWICK DRIVE, SUITE 200 AUSTIN, TEXAS 78729 WWW.AECOM.COM TBPE REG. NO. F-3580

carollo TBPE No. F-882

CITY OF AUSTIN — FOUNDED 1839

CITY OF AUSTIN

CITY OF AUSTIN
WILD HORSE RANCH WWTP EXPANSION
CIVIL
YARD PIPING SITE PLAN
SHEET 2 OF 3

VERIFY SCALES
BAR IS ONE INCH ON ORIGINAL DRAWING
0 — 1"
IF NOT ONE INCH ON THIS SHEET, ADJUST SCALES ACCORDINGLY

JOB NO. 10976A.10
DRAWING NO. 02C02
SHEET NO. 246 OF 464

LAST SAVED BY: dseivert

PROJECT NO. 9585A10 FILE NAME: 9585A10_SheetSeed.dgn

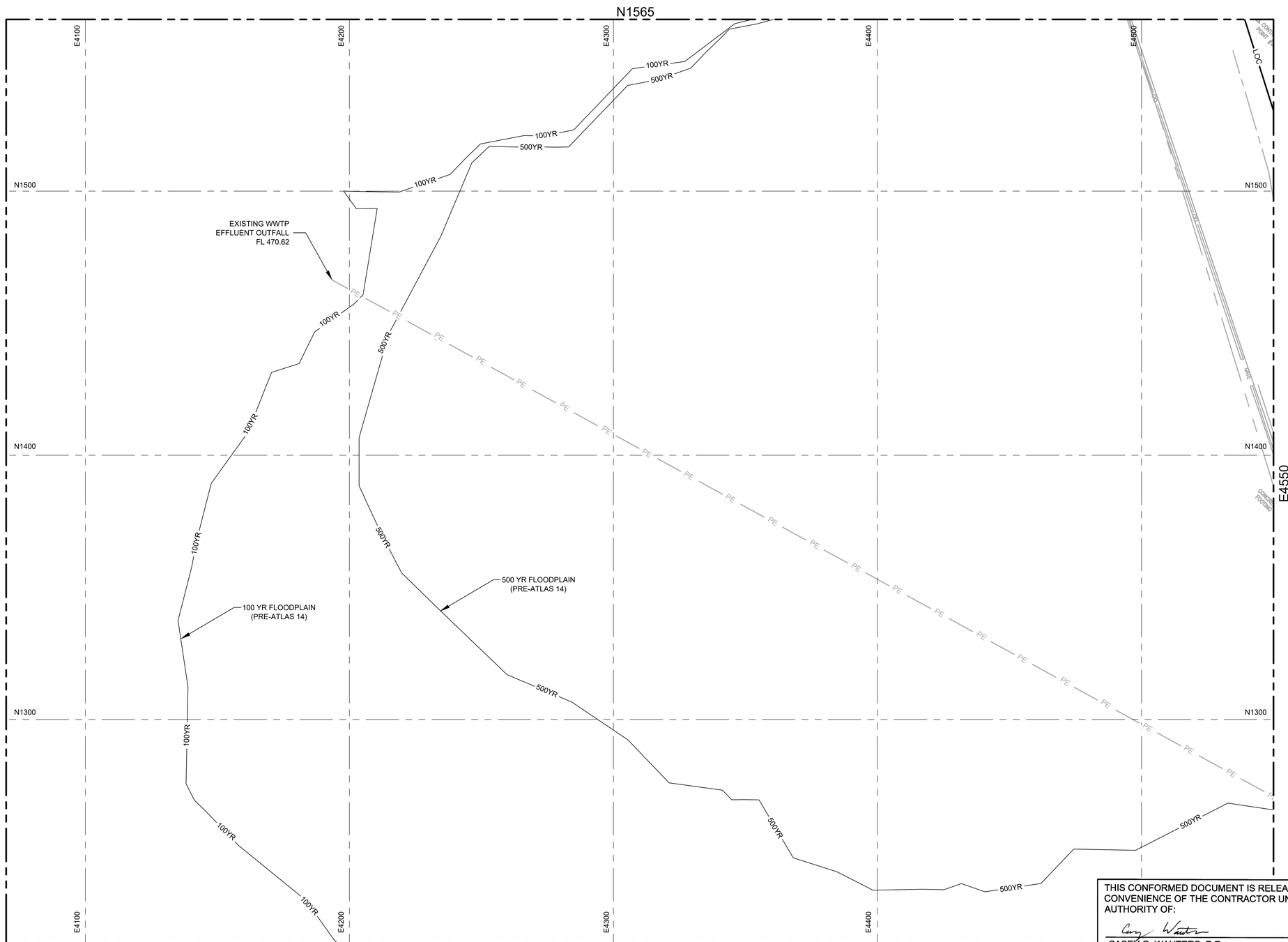

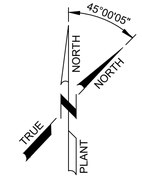

SCALE: 1" = 20'

LEGEND

- EXISTING
- PROPOSED
- 100YR — 100 YEAR FLOODPLAIN
- 500YR — 500 YEAR FLOODPLAIN
- LOC — LOC — LIMITS OF CONSTRUCTION

NOTES:

1. REFERENCE DRAWING 00G06 FOR OVERALL WWTP SITE PLAN.
2. REFERENCE DRAWING 00G14 FOR ALL SURVEY CONTROL POINTS AND COORDINATES.
3. EXISTING UTILITY INFORMATION, SHOWN AS BACKGROUND IN THE PLAN VIEW, WAS OBTAINED FROM AVAILABLE RECORD DRAWINGS. FROM A PREVIOUS PROJECT WHICH MAY NOT BE COMPLETE OR ACCURATE. IT IS INTENDED TO PROVIDE BASIC INFORMATION ON EXISTING FACILITIES. CONTRACTOR IS RESPONSIBLE FOR FIELD VERIFYING THE LOCATION AND ELEVATION OF EXISTING UTILITIES PRIOR TO CONSTRUCTION.

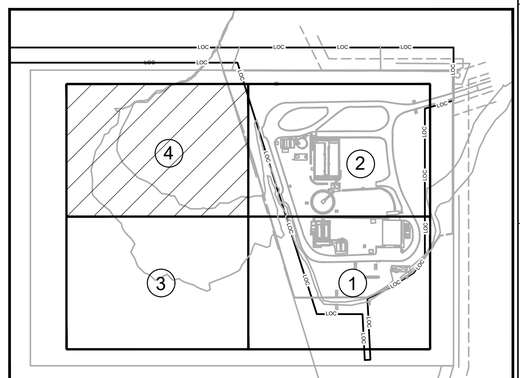

THIS CONFORMED DOCUMENT IS RELEASED FOR THE CONVENIENCE OF THE CONTRACTOR UNDER THE AUTHORITY OF:

CASEY G. WAUTERS, P.E. — 11-01-22
TX LIC NO. 93889 — DATE

SEE DISCLAIMER FOR LIMITATIONS OF USE.

CONTRACT DOCUMENTS DATED JUNE 10, 2022, AS PART OF THE BIDDING DOCUMENTS (DRAWINGS AND SPECIFICATIONS) AND SUBSEQUENTLY ISSUED ADDENDA HAVE BEEN MERGED INTO ONE CONFORMING SET OF DOCUMENTS FOR THE CONVENIENCE OF THE CONTRACTOR. IF INCONSISTENCIES OR AMBIGUITIES BETWEEN "CONFORMED" DOCUMENTS AND CONTRACT DOCUMENTS ARE FOUND, THE CONTRACT DOCUMENTS SHALL GOVERN.

REV	DATE	BY	DESCRIPTION
			CONFORMED DOCUMENTS

DESIGNED NL/CW
DRAWN AW
CHECKED SGE
DATE FEBRUARY 2022

** ORIGINAL SEALED BY CASEY G. WAUTERS, P.E. 2/28/2022 TX PE 93889 **

AECOM TECHNICAL SERVICES INC.
13640 BRIARWICK DRIVE, SUITE 200
AUSTIN, TEXAS 78729
WWW.AECOM.COM
TBPE REG. NO. F-3580

TBPE No. F-882

CITY OF AUSTIN

CITY OF AUSTIN
WILD HORSE RANCH WWTP EXPANSION
CIVIL
YARD PIPING SITE PLAN
SHEET 3 OF 3

VERIFY SCALES
BAR IS ONE INCH ON ORIGINAL DRAWING
0 1"
IF NOT ONE INCH ON THIS SHEET, ADJUST SCALES ACCORDINGLY

JOB NO. 10976A.10
DRAWING NO. 02C04
SHEET NO. 247 OF 464

LAST SAVED BY:

PROJECT NO. 9585A10 FILE NAME: 9585A10_SheetSeed.dgn

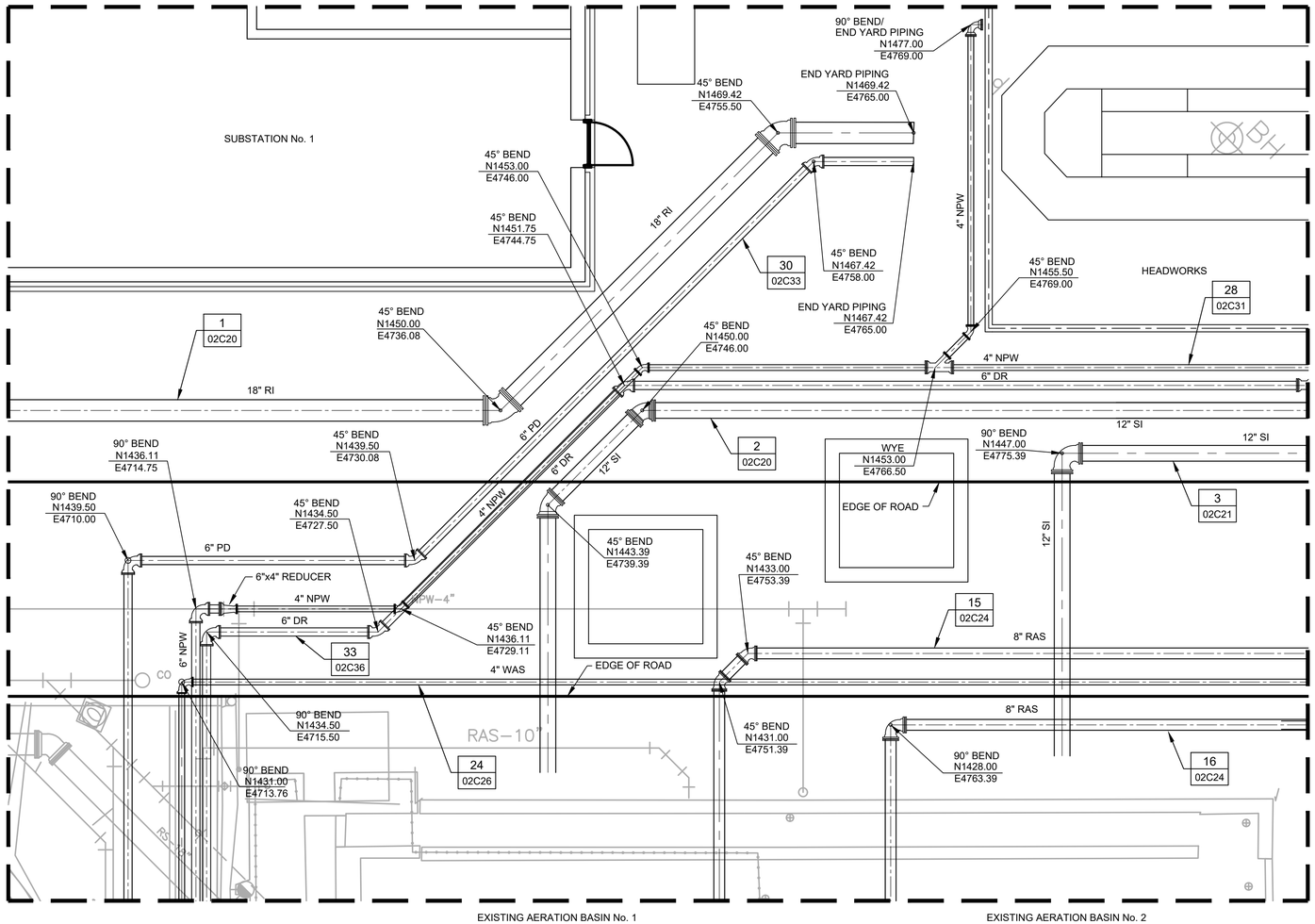

45°00'05"
NORTH
NORTH
TRUE
PLANT

SCALE: 1" = 5'

LEGEND

X	PROFILE NUMBER
XX	DRAWING NUMBER PROFILE IS ON

NOTES:

1. EXISTING UTILITY INFORMATION, SHOWN AS BACKGROUND IN THE PLAN VIEW, WAS OBTAINED FROM AVAILABLE RECORD DRAWINGS FROM A PREVIOUS PROJECT WHICH MAY NOT BE COMPLETE OR ACCURATE. IT IS INTENDED TO PROVIDE BASIC INFORMATION ON EXISTING FACILITIES. CONTRACTOR IS RESPONSIBLE FOR FIELD VERIFYING THE LOCATION AND ELEVATION OF EXISTING UTILITIES PRIOR TO CONSTRUCTION.

1 ENLARGED PIPING PLAN

1 / 02C02

SCALE: 1" = 5'-0"
FILE:

THIS CONFORMED DOCUMENT IS RELEASED FOR THE CONVENIENCE OF THE CONTRACTOR UNDER THE AUTHORITY OF:

CASEY G. WAUTERS, P.E. — 11-01-22
TX LIC NO. 93889 — DATE

SEE DISCLAIMER FOR LIMITATIONS OF USE.

CONTRACT DOCUMENTS DATED JUNE 10, 2022, AS PART OF THE BIDDING DOCUMENTS (DRAWINGS AND SPECIFICATIONS) AND SUBSEQUENTLY ISSUED ADDENDA HAVE BEEN MERGED INTO ONE CONFORMING SET OF DOCUMENTS FOR THE CONVENIENCE OF THE CONTRACTOR. IF INCONSISTENCIES OR AMBIGUITIES BETWEEN "CONFORMED" DOCUMENTS AND CONTRACT DOCUMENTS ARE FOUND, THE CONTRACT DOCUMENTS SHALL GOVERN.

REV	DATE	BY	DESCRIPTION
			CONFORMED DOCUMENTS

DESIGNED NL/CW
DRAWN AW
CHECKED SGE
DATE FEBRUARY 2022

**
ORIGINAL
SEALED BY
CASEY G. WAUTERS, P.E.
2/28/2022
TX PE 93889
**

AECOM TECHNICAL SERVICES INC.
13640 BRIARWICK DRIVE, SUITE 200
AUSTIN, TEXAS 78729
WWW.AECOM.COM
TBPE REG. NO. F-3580

TBPE No. F-882

CITY OF AUSTIN

CITY OF AUSTIN
WILD HORSE RANCH WWTP EXPANSION
CIVIL
YARD PIPING DETAIL
(SHEET 1 OF 6)

VERIFY SCALES
BAR IS ONE INCH ON ORIGINAL DRAWING
0 1"
IF NOT ONE INCH ON THIS SHEET, ADJUST SCALES ACCORDINGLY

JOB NO. 10976A.10
DRAWING NO. 02C10
SHEET NO. 248 OF 464

LAST SAVED BY:

PROJECT NO. 9585A10 FILE NAME:

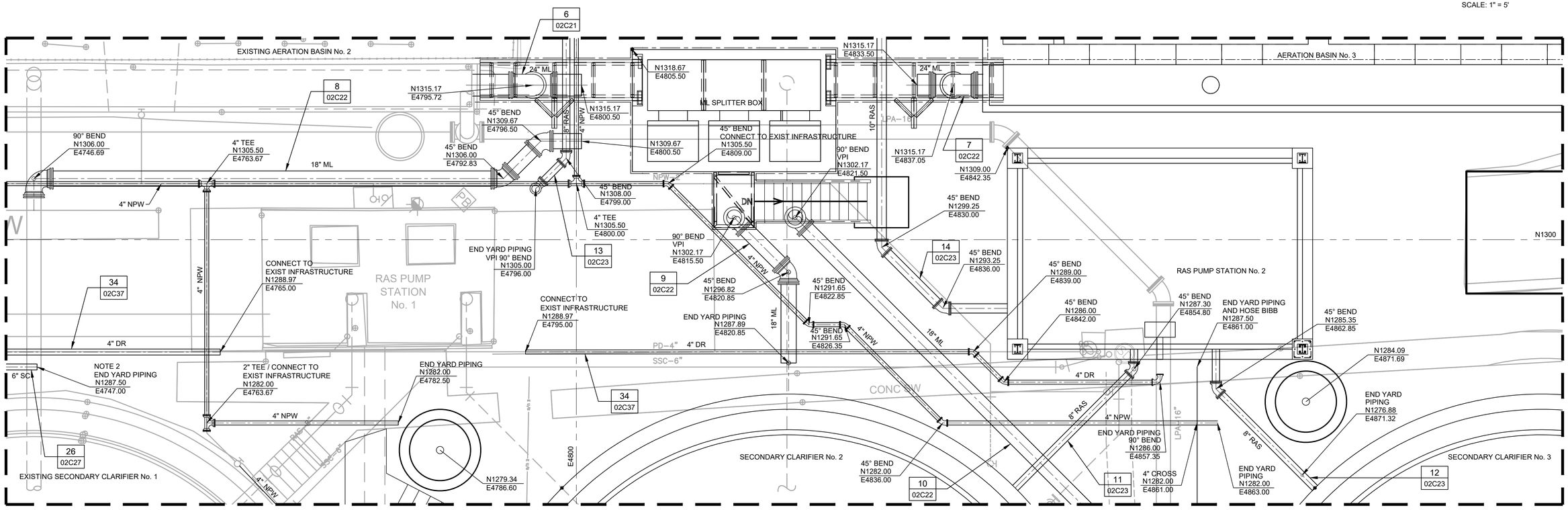

2 ENLARGED PIPING PLAN

02C02

SCALE: 1" = 5'-0"
FILE:

LEGEND

X	PROFILE NUMBER
XX	DRAWING NUMBER PROFILE IS ON

NOTES:

1. EXISTING UTILITY INFORMATION, SHOWN AS BACKGROUND IN THE PLAN VIEW, WAS OBTAINED FROM AVAILABLE RECORD DRAWINGS FROM A PREVIOUS PROJECT WHICH MAY NOT BE COMPLETE OR ACCURATE. IT IS INTENDED TO PROVIDE BASIC INFORMATION ON EXISTING FACILITIES. CONTRACTOR IS RESPONSIBLE FOR FIELD VERIFYING THE LOCATION AND ELEVATION OF EXISTING UTILITIES PRIOR TO CONSTRUCTION.
2. REFER TO 40M01 FOR PIPING CONTINUATION.

THIS CONFORMED DOCUMENT IS RELEASED FOR THE CONVENIENCE OF THE CONTRACTOR UNDER THE AUTHORITY OF:

CASEY G. WAUTERS, P.E.
TX LIC NO. 93889

11-01-22
DATE

SEE DISCLAIMER FOR LIMITATIONS OF USE.

CONTRACT DOCUMENTS DATED JUNE 10, 2022, AS PART OF THE BIDDING DOCUMENTS (DRAWINGS AND SPECIFICATIONS) AND SUBSEQUENTLY ISSUED ADDENDA HAVE BEEN MERGED INTO ONE CONFORMING SET OF DOCUMENTS FOR THE CONVENIENCE OF THE CONTRACTOR. IF INCONSISTENCIES OR AMBIGUITIES BETWEEN "CONFORMED" DOCUMENTS AND CONTRACT DOCUMENTS ARE FOUND, THE CONTRACT DOCUMENTS SHALL GOVERN.

REV	DATE	BY	DESCRIPTION
			CONFORMED DOCUMENTS

DESIGNED NL/CW
DRAWN AW
CHECKED SGE
DATE FEBRUARY 2022

**
ORIGINAL
SEALED BY
CASEY G. WAUTERS, P.E.
2/28/2022
TX PE 93889
**

AECOM TECHNICAL SERVICES INC.
13640 BRIARWICK DRIVE, SUITE 200
AUSTIN, TEXAS 78729
WWW.AECOM.COM
TBPE REG. NO. F-3580

carollo
TBPE No. F-882

CITY OF AUSTIN

CITY OF AUSTIN
WILD HORSE RANCH WWTP EXPANSION
CIVIL
YARD PIPING DETAIL
(SHEET 2 OF 6)

VERIFY SCALES
BAR IS ONE INCH ON ORIGINAL DRAWING
0 1"
IF NOT ONE INCH ON THIS SHEET, ADJUST SCALES ACCORDINGLY

JOB NO. 10976A.10
DRAWING NO. 02C11
SHEET NO. 249 OF 464

LAST SAVED BY: dseivert

PROJECT NO. 9585A10 FILE NAME: 9585A10_SheetSeed.dgn

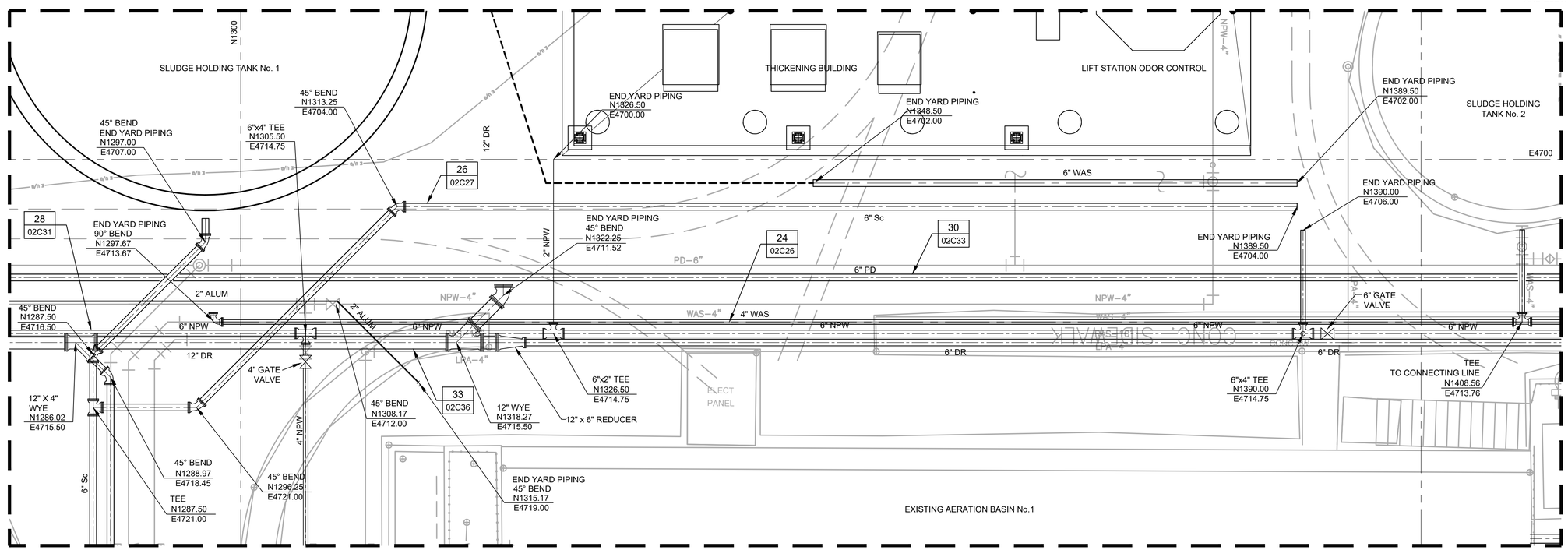

TRUE
PLANT
NORTH
NORTH
45°00'05"

SCALE: 1" = 5'

NOTES:

1. EXISTING UTILITY INFORMATION, SHOWN AS BACKGROUND IN THE PLAN VIEW, WAS OBTAINED FROM AVAILABLE RECORD DRAWINGS FROM A PREVIOUS PROJECT WHICH MAY NOT BE COMPLETE OR ACCURATE. IT IS INTENDED TO PROVIDE BASIC INFORMATION ON EXISTING FACILITIES. CONTRACTOR IS RESPONSIBLE FOR FIELD VERIFYING THE LOCATION AND ELEVATION OF EXISTING UTILITIES PRIOR TO CONSTRUCTION.

LEGEND

X	PROFILE NUMBER
XX	DRAWING NUMBER PROFILE IS ON

3 ENLARGED PIPING PLAN

3 / 02C02

SCALE: 1" = 5'-0"
FILE:

THIS CONFORMED DOCUMENT IS RELEASED FOR THE CONVENIENCE OF THE CONTRACTOR UNDER THE AUTHORITY OF:

CASEY G. WAUTERS, P.E.
TX LIC NO. 93889

11-01-22
DATE

SEE DISCLAIMER FOR LIMITATIONS OF USE.

CONTRACT DOCUMENTS DATED JUNE 10, 2022, AS PART OF THE BIDDING DOCUMENTS (DRAWINGS AND SPECIFICATIONS) AND SUBSEQUENTLY ISSUED ADDENDA HAVE BEEN MERGED INTO ONE CONFORMING SET OF DOCUMENTS FOR THE CONVENIENCE OF THE CONTRACTOR. IF INCONSISTENCIES OR AMBIGUITIES BETWEEN "CONFORMED" DOCUMENTS AND CONTRACT DOCUMENTS ARE FOUND, THE CONTRACT DOCUMENTS SHALL GOVERN.

REV	DATE	BY	DESCRIPTION
			CONFORMED DOCUMENTS

DESIGNED NL/CW
DRAWN AW
CHECKED SGE
DATE FEBRUARY 2022

**
ORIGINAL
SEALED BY
CASEY G. WAUTERS, P.E.
2/28/2022
TX PE 93889
**

AECOM TECHNICAL SERVICES INC.
13640 BRIARWICK DRIVE, SUITE 200
AUSTIN, TEXAS 78729
WWW.AECOM.COM
TBPE REG. NO. F-3580

TBPE No. F-882

CITY OF AUSTIN

CITY OF AUSTIN
WILD HORSE RANCH WWTP EXPANSION
CIVIL
YARD PIPING DETAIL
(SHEET 3 OF 6)

VERIFY SCALES
BAR IS ONE INCH ON ORIGINAL DRAWING
0 1"
IF NOT ONE INCH ON THIS SHEET, ADJUST SCALES ACCORDINGLY

JOB NO. 10976A.10
DRAWING NO. 02C12
SHEET NO. 250 OF 464

LAST SAVED BY:

PROJECT NO. 9585A10
FILE NAME:

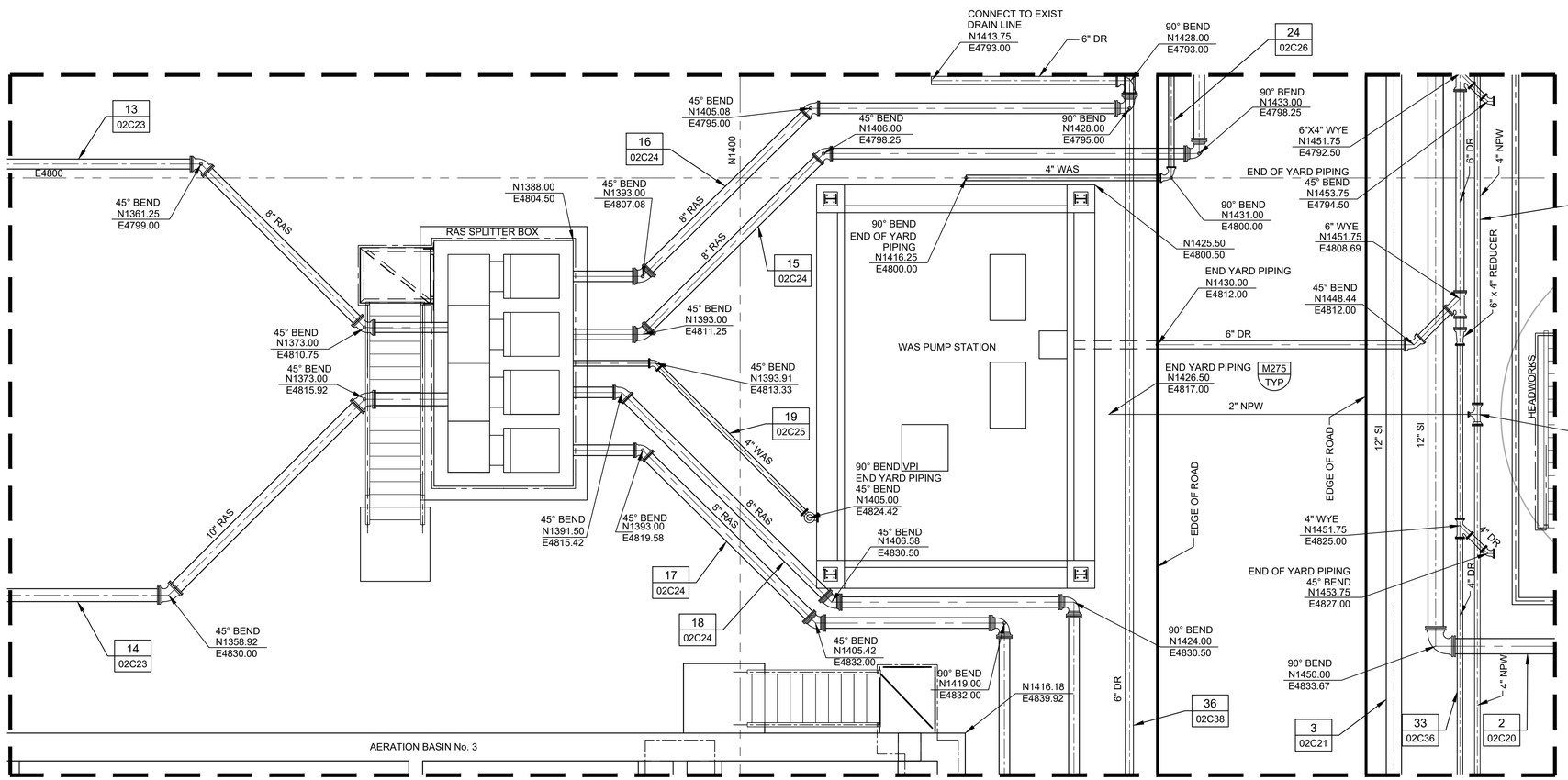

4 ENLARGED PIPING PLAN

02C02

SCALE: 1" = 5'-0"

FILE:

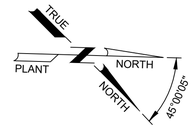

SCALE: 1" = 5'

LEGEND

X	PROFILE NUMBER
XX	DRAWING NUMBER PROFILE IS ON

NOTES:

1. EXISTING UTILITY INFORMATION, SHOWN AS BACKGROUND IN THE PLAN VIEW, WAS OBTAINED FROM AVAILABLE RECORD DRAWINGS FROM A PREVIOUS PROJECT WHICH MAY NOT BE COMPLETE OR ACCURATE. IT IS INTENDED TO PROVIDE BASIC INFORMATION ON EXISTING FACILITIES. CONTRACTOR IS RESPONSIBLE FOR FIELD VERIFYING THE LOCATION AND ELEVATION OF EXISTING UTILITIES PRIOR TO CONSTRUCTION.

THIS CONFORMED DOCUMENT IS RELEASED FOR THE CONVENIENCE OF THE CONTRACTOR UNDER THE AUTHORITY OF:

CASEY G. WAUTERS, P.E.
TX LIC NO. 93889

11-01-22
DATE

SEE DISCLAIMER FOR LIMITATIONS OF USE.

CONTRACT DOCUMENTS DATED JUNE 10, 2022, AS PART OF THE BIDDING DOCUMENTS (DRAWINGS AND SPECIFICATIONS) AND SUBSEQUENTLY ISSUED ADDENDA HAVE BEEN MERGED INTO ONE CONFORMING SET OF DOCUMENTS FOR THE CONVENIENCE OF THE CONTRACTOR. IF INCONSISTENCIES OR AMBIGUITIES BETWEEN "CONFORMED" DOCUMENTS AND CONTRACT DOCUMENTS ARE FOUND, THE CONTRACT DOCUMENTS SHALL GOVERN.

REV	DATE	BY	DESCRIPTION
			CONFORMED DOCUMENTS

DESIGNED NL/CW
DRAWN AW
CHECKED SGE
DATE FEBRUARY 2022

** ORIGINAL SEALED BY CASEY G. WAUTERS, P.E. 2/28/2022 TX PE 93889 **

AECOM TECHNICAL SERVICES INC.
13640 BRIARWICK DRIVE, SUITE 200
AUSTIN, TEXAS 78729
WWW.AECOM.COM
TBPE REG. NO. F-3580

TBPE No. F-882

CITY OF AUSTIN

CITY OF AUSTIN
WILD HORSE RANCH WWTP EXPANSION
CIVIL
YARD PIPING DETAIL (SHEET 4 OF 6)

VERIFY SCALES
BAR IS ONE INCH ON ORIGINAL DRAWING
0 1"
IF NOT ONE INCH ON THIS SHEET, ADJUST SCALES ACCORDINGLY

JOB NO. 10976A.10
DRAWING NO. 02C13
SHEET NO. 251 OF 464

LAST SAVED BY:

PROJECT NO. 9585A10 FILE NAME:

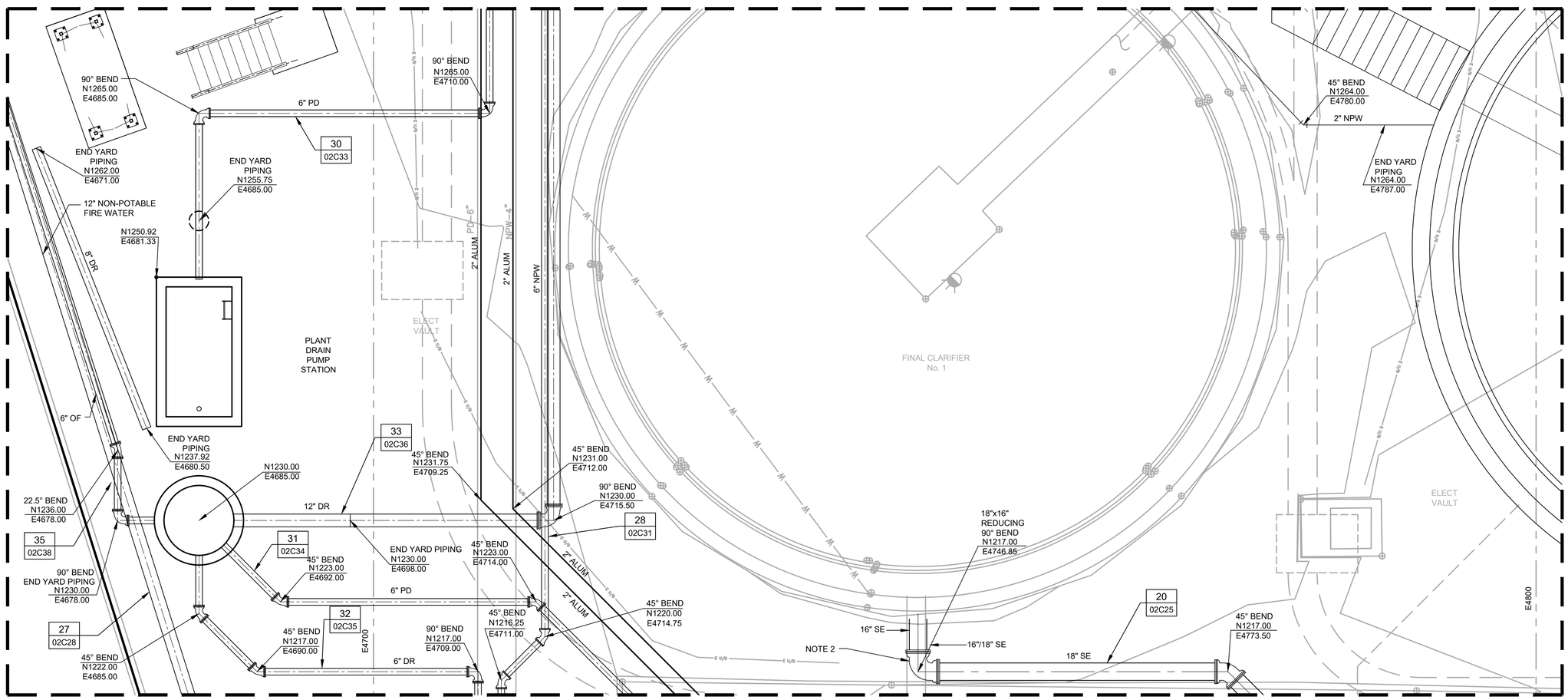

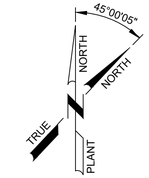

SCALE: 1" = 5'

LEGEND

X	PROFILE NUMBER
XX	DRAWING NUMBER PROFILE IS ON

5 / 02C02 ENLARGED PIPING PLAN

SCALE: 1" = 5'-0"
FILE:

NOTES:

1. EXISTING UTILITY INFORMATION, SHOWN AS BACKGROUND IN THE PLAN VIEW, WAS OBTAINED FROM AVAILABLE RECORD DRAWINGS FROM A PREVIOUS PROJECT WHICH MAY NOT BE COMPLETE OR ACCURATE. IT IS INTENDED TO PROVIDE BASIC INFORMATION ON EXISTING FACILITIES. CONTRACTOR IS RESPONSIBLE FOR FIELD VERIFYING THE LOCATION AND ELEVATION OF EXISTING UTILITIES PRIOR TO CONSTRUCTION.
2. CONNECTION TO EXISTING 16" SE. REFER TO DEMO SHEETS FOR MORE INFORMATION.

THIS CONFORMED DOCUMENT IS RELEASED FOR THE CONVENIENCE OF THE CONTRACTOR UNDER THE AUTHORITY OF:

CASEY G. WAUTERS, P.E. 11-01-22
TX LIC NO. 93889 DATE

SEE DISCLAIMER FOR LIMITATIONS OF USE.

CONTRACT DOCUMENTS DATED JUNE 10, 2022, AS PART OF THE BIDDING DOCUMENTS (DRAWINGS AND SPECIFICATIONS) AND SUBSEQUENTLY ISSUED ADDENDA HAVE BEEN MERGED INTO ONE CONFORMING SET OF DOCUMENTS FOR THE CONVENIENCE OF THE CONTRACTOR. IF INCONSISTENCIES OR AMBIGUITIES BETWEEN "CONFORMED" DOCUMENTS AND CONTRACT DOCUMENTS ARE FOUND, THE CONTRACT DOCUMENTS SHALL GOVERN.

REV	DATE	BY	DESCRIPTION
			CONFORMED DOCUMENTS

DESIGNED NL/CW
DRAWN AW
CHECKED SGE
DATE MAY 2022

ORIGINAL SEALED BY CASEY G. WAUTERS, P.E. 5/9/2022 TX PE 93889

AECOM TECHNICAL SERVICES INC.
13640 BRIARWICK DRIVE, SUITE 200
AUSTIN, TEXAS 78729
WWW.AECOM.COM
TBPE REG. NO. F-3580

carollo
TBPE No. F-882

CITY OF AUSTIN

CITY OF AUSTIN
WILD HORSE RANCH WWTP EXPANSION
CIVIL
YARD PIPING DETAIL
(SHEET 5 OF 6)

VERIFY SCALES
BAR IS ONE INCH ON ORIGINAL DRAWING
0 1"
IF NOT ONE INCH ON THIS SHEET, ADJUST SCALES ACCORDINGLY

JOB NO. 10976A.10
DRAWING NO. 02C14
SHEET NO. 252 OF 464

LAST SAVED BY:

PROJECT NO. 9585A10 FILE NAME:

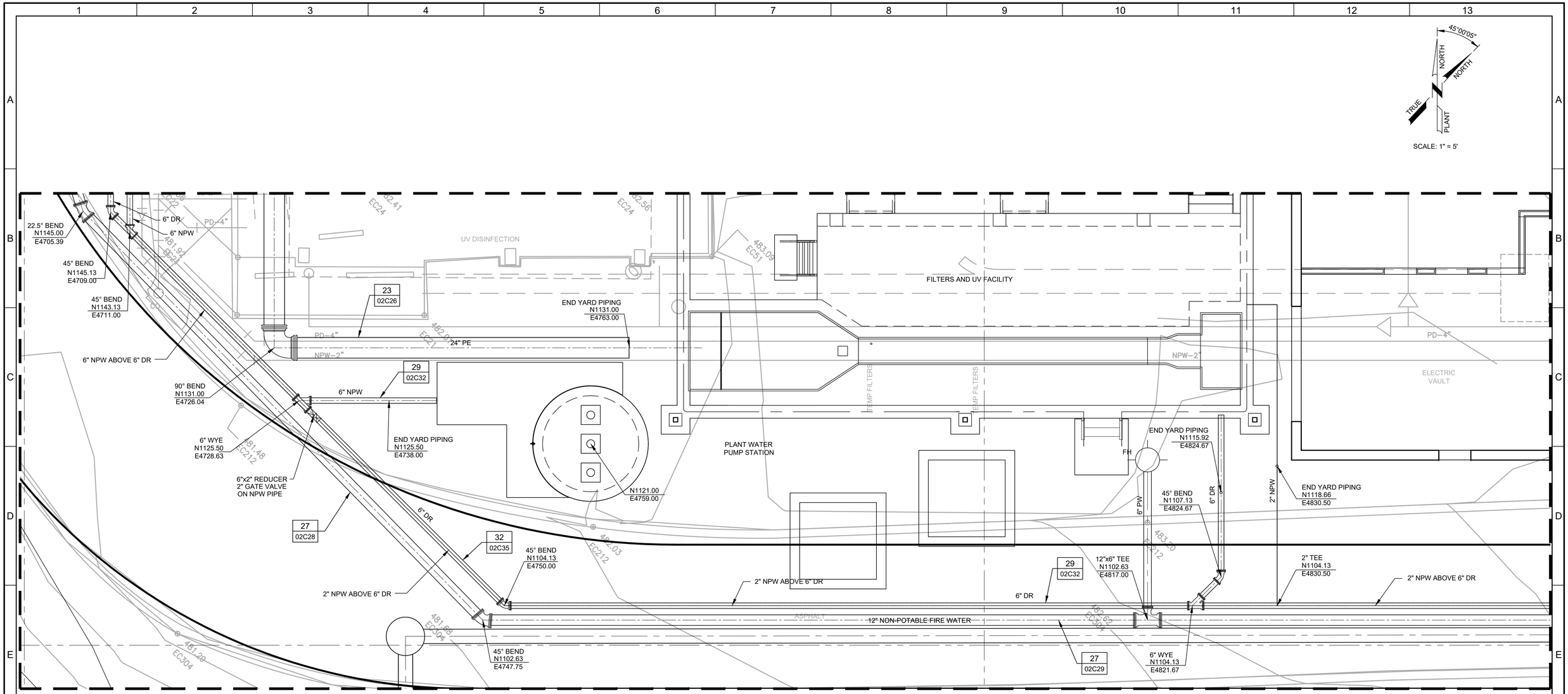

1 ENLARGED PIPING PLAN

02C01

SCALE: 1" = 5'-0"
FILE:

LEGEND

X	PROFILE NUMBER
XX	DRAWING NUMBER PROFILE IS ON

NOTES:

1. EXISTING UTILITY INFORMATION, SHOWN AS BACKGROUND IN THE PLAN VIEW, WAS OBTAINED FROM AVAILABLE RECORD DRAWINGS FROM A PREVIOUS PROJECT WHICH MAY NOT BE COMPLETE OR ACCURATE. IT IS INTENDED TO PROVIDE BASIC INFORMATION ON EXISTING FACILITIES. CONTRACTOR IS RESPONSIBLE FOR FIELD VERIFYING THE LOCATION AND ELEVATION OF EXISTING UTILITIES PRIOR TO CONSTRUCTION.

THIS CONFORMED DOCUMENT IS RELEASED FOR THE CONVENIENCE OF THE CONTRACTOR UNDER THE AUTHORITY OF:

CASEY G. WAUTERS, P.E.
TX LIC NO. 93889

11-01-22
DATE

SEE DISCLAIMER FOR LIMITATIONS OF USE.

CONTRACT DOCUMENTS DATED JUNE 10, 2022, AS PART OF THE BIDDING DOCUMENTS (DRAWINGS AND SPECIFICATIONS) AND SUBSEQUENTLY ISSUED ADDENDA HAVE BEEN MERGED INTO ONE CONFORMING SET OF DOCUMENTS FOR THE CONVENIENCE OF THE CONTRACTOR. IF INCONSISTENCIES OR AMBIGUITIES BETWEEN "CONFORMED" DOCUMENTS AND CONTRACT DOCUMENTS ARE FOUND, THE CONTRACT DOCUMENTS SHALL GOVERN.

REV	DATE	BY	DESCRIPTION
			CONFORMED DOCUMENTS

DESIGNED NL/CW
DRAWN AW
CHECKED SGE
DATE MAY 2022

**
ORIGINAL
SEALED BY
CASEY G. WAUTERS, P.E.
5/9/2022
TX PE 93889
**

AECOM TECHNICAL SERVICES INC.
13640 BRIARWICK DRIVE, SUITE 200
AUSTIN, TEXAS 78729
WWW.AECOM.COM
TBPE REG. NO. F-3580

TBPE No. F-882

CITY OF AUSTIN

CITY OF AUSTIN
WILD HORSE RANCH WWTP EXPANSION
CIVIL
YARD PIPING DETAIL
(SHEET 6 OF 6)

VERIFY SCALES
BAR IS ONE INCH ON ORIGINAL DRAWING
0 1"
IF NOT ONE INCH ON THIS SHEET, ADJUST SCALES ACCORDINGLY

JOB NO. 10976A.10
DRAWING NO. 02C15
SHEET NO. 253 OF 464

LAST SAVED BY:

PROJECT NO. 9585A10 FILE NAME:

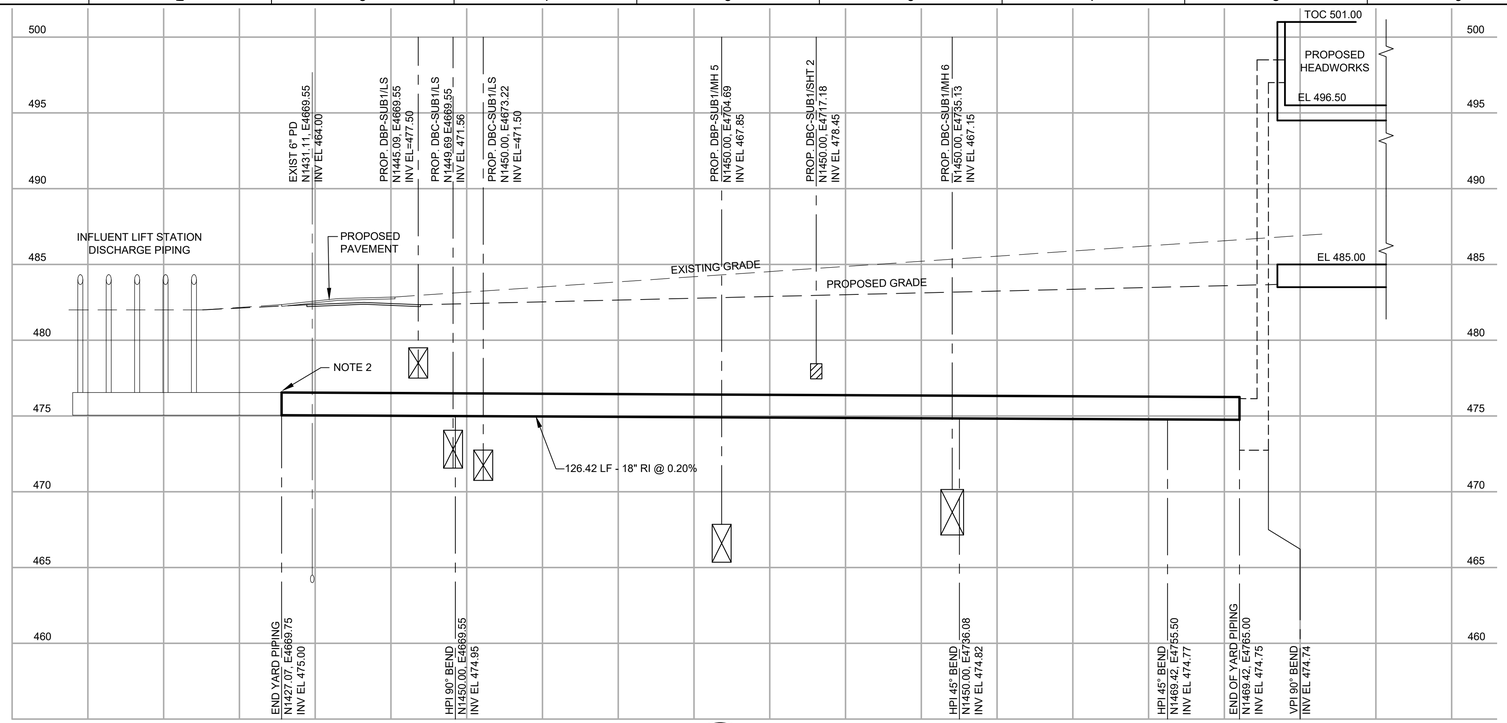

1 02C02 **RI-18"**
SCALE: 1"=10' HORIZ, 1"= 5' VERTICAL
FILE:

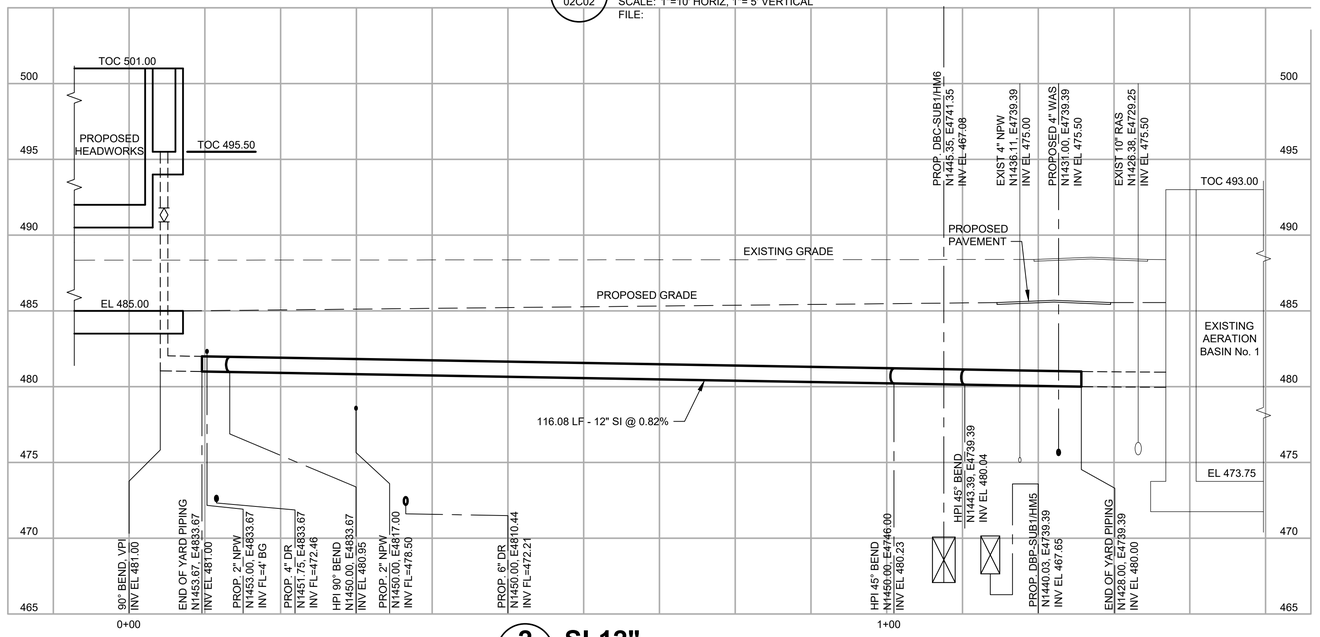

2 02C02 **SI-12"**
SCALE: 1"=10' HORIZ, 1"= 5' VERTICAL
FILE:

NOTES:

1. PROPOSED PIPING ON THIS DRAWING IS SHOWING THE FINAL LAYOUT. REFERENCE SHEETS 02D01 TO 02D05 FOR EXISTING PIPING DEMOLITION ABANDONMENT, AND CONSTRUCTION PHASING.
2. EXISTING YARD PIPING INFORMATION SHOWN ON THIS DRAWING IS FROM RECORD DRAWINGS. ACTUAL FIELD CONDITIONS MAY BE DIFFERENT FROM THOSE SHOWN IN THIS DRAWING. CONTRACTOR TO FIELD VERIFY INSTALLED CONDITIONS IMPACTING OR IMPACTED BY THIS WORK PRIOR TO INITIATING WORK.

THIS CONFORMED DOCUMENT IS RELEASED FOR THE CONVENIENCE OF THE CONTRACTOR UNDER THE AUTHORITY OF:

CASEY G. WAUTERS, P.E.
TX LIC NO. 93889

11-01-22
DATE

SEE DISCLAIMER FOR LIMITATIONS OF USE.

CONTRACT DOCUMENTS DATED JUNE 10, 2022, AS PART OF THE BIDDING DOCUMENTS (DRAWINGS AND SPECIFICATIONS) AND SUBSEQUENTLY ISSUED ADDENDA HAVE BEEN MERGED INTO ONE CONFORMING SET OF DOCUMENTS FOR THE CONVENIENCE OF THE CONTRACTOR. IF INCONSISTENCIES OR AMBIGUITIES BETWEEN "CONFORMED" DOCUMENTS AND CONTRACT DOCUMENTS ARE FOUND, THE CONTRACT DOCUMENTS SHALL GOVERN.

REV	DATE	BY	DESCRIPTION
			CONFORMED DOCUMENTS

DESIGNED NL/CW
DRAWN AW
CHECKED SGE
DATE FEBRUARY 2022

** ORIGINAL SEALED BY CASEY G. WAUTERS, P.E. 2/28/2022 TX PE 93889 **

AECOM TECHNICAL SERVICES INC.
13640 BRIARWICK DRIVE, SUITE 200
AUSTIN, TEXAS 78729
WWW.AECOM.COM
TBPE REG. NO. F-3580

TBPE No. F-882

CITY OF AUSTIN

CITY OF AUSTIN
WILD HORSE RANCH WWTP EXPANSION
CIVIL
YARD PIPING PROFILES
SHEET 1 OF 19

VERIFY SCALES
BAR IS ONE INCH ON ORIGINAL DRAWING
0 1"
IF NOT ONE INCH ON THIS SHEET, ADJUST SCALES ACCORDINGLY

JOB NO. 10976A.10
DRAWING NO. 02C20
SHEET NO. 254 OF 464

LAST SAVED BY: dseivert

PROJECT NO. 9585A10 FILE NAME: 9585A10_SheetSeed.dgn

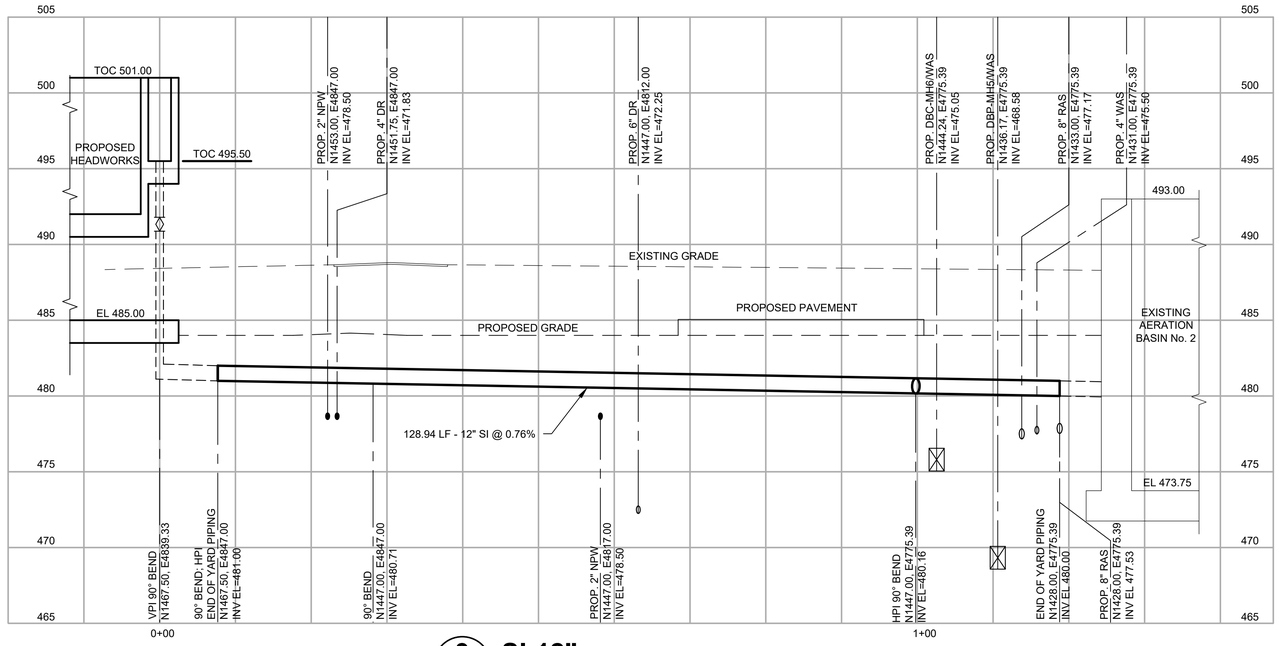

3 02C02 **SI-12"**
SCALE: 1"=10' HORIZ, 1"= 5' VERTICAL
FILE:

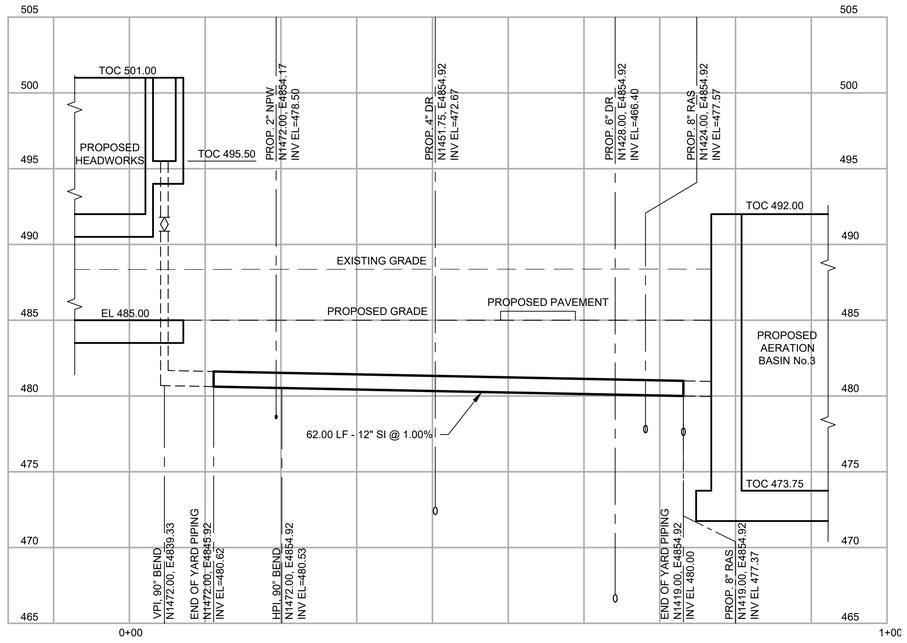

4 02C02 **SI-12"**
SCALE: 1"=10' HORIZ, 1"= 5' VERTICAL
FILE:

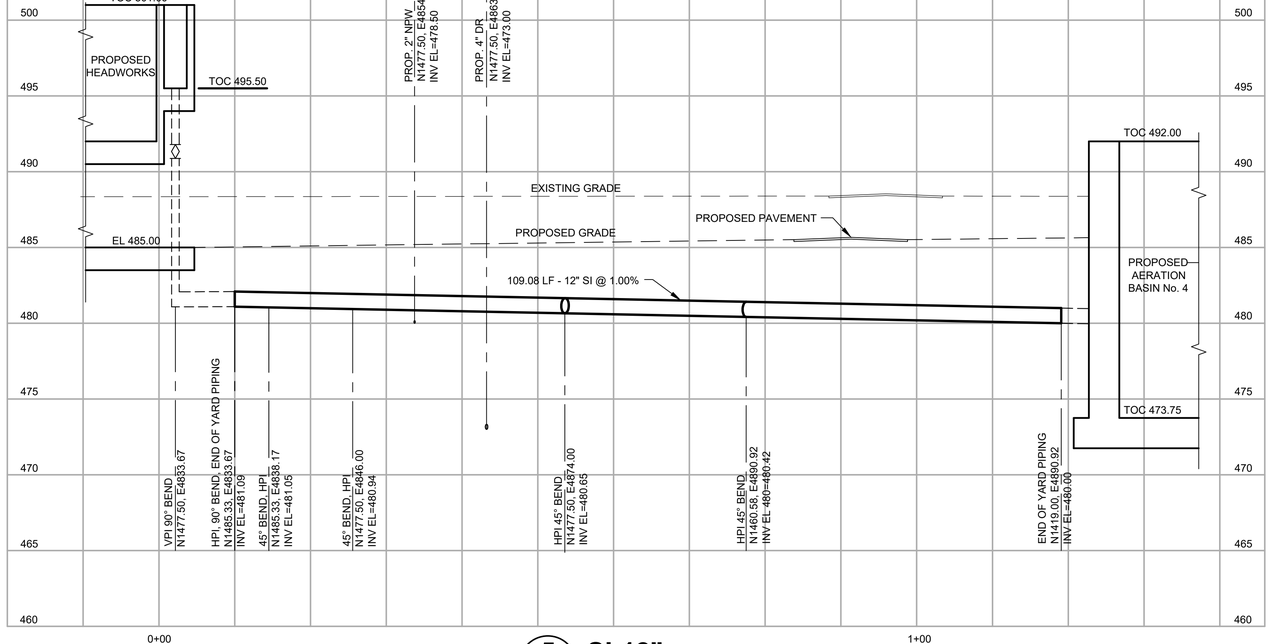

5 02C02 **SI-12"**
SCALE: 1"=10' HORIZ, 1"= 5' VERTICAL
FILE:

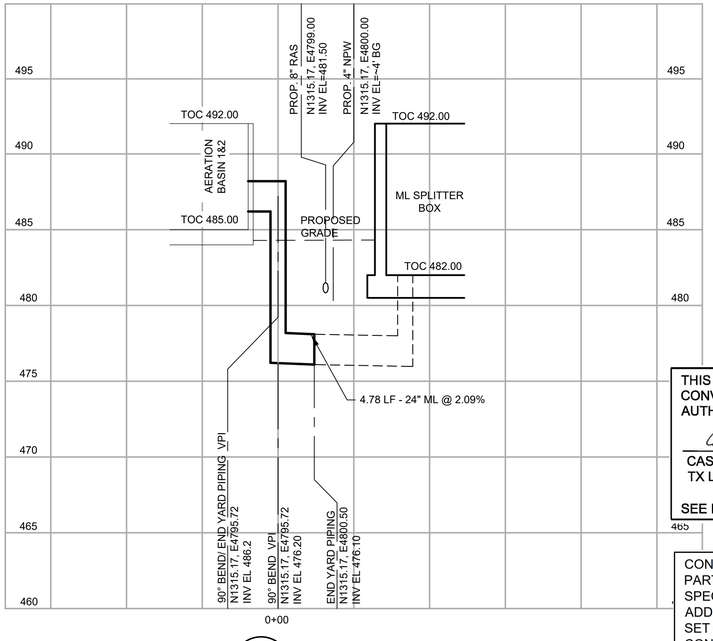

6 02C02 **ML-24"**
SCALE: 1"=10' HORIZ, 1"= 5' VERTICAL
FILE:

NOTES:

1. PROPOSED PIPING ON THIS DRAWING IS SHOWING THE FINAL LAYOUT. REFERENCE SHEETS 02D01 TO 02D05 FOR EXISTING PIPING DEMOLITION ABANDONMENT, AND CONSTRUCTION PHASING.
2. EXISTING YARD PIPING INFORMATION SHOWN ON THIS DRAWING IS FROM RECORD DRAWINGS. ACTUAL FIELD CONDITIONS MAY BE DIFFERENT FROM THOSE SHOWN IN THIS DRAWING. CONTRACTOR TO FIELD VERIFY INSTALLED CONDITIONS IMPACTING OR IMPACTED BY THIS WORK PRIOR TO INITIATING WORK.

THIS CONFORMED DOCUMENT IS RELEASED FOR THE CONVENIENCE OF THE CONTRACTOR UNDER THE AUTHORITY OF:

CASEY G. WAUTERS, P.E. — 11-01-22
TX LIC NO. 93889 — DATE

SEE DISCLAIMER FOR LIMITATIONS OF USE.

CONTRACT DOCUMENTS DATED JUNE 10, 2022, AS PART OF THE BIDDING DOCUMENTS (DRAWINGS AND SPECIFICATIONS) AND SUBSEQUENTLY ISSUED ADDENDA HAVE BEEN MERGED INTO ONE CONFORMING SET OF DOCUMENTS FOR THE CONVENIENCE OF THE CONTRACTOR. IF INCONSISTENCIES OR AMBIGUITIES BETWEEN "CONFORMED" DOCUMENTS AND CONTRACT DOCUMENTS ARE FOUND, THE CONTRACT DOCUMENTS SHALL GOVERN.

REV	DATE	BY	DESCRIPTION
			CONFORMED DOCUMENTS

DESIGNED NL/CW
DRAWN AW
CHECKED SGE
DATE FEBRUARY 2022

ORIGINAL SEALED BY CASEY G. WAUTERS, P.E. 2/28/2022 TX PE 93889

AECOM TECHNICAL SERVICES INC.
13640 BRIARWICK DRIVE, SUITE 200
AUSTIN, TEXAS 78729
WWW.AECOM.COM
TBPE REG. NO. F-3580

TBPE No. F-882

CITY OF AUSTIN

CITY OF AUSTIN
WILD HORSE RANCH WWTP EXPANSION
CIVIL
YARD PIPING PROFILES
SHEET 2 OF 19

VERIFY SCALES
BAR IS ONE INCH ON ORIGINAL DRAWING
0 — 1"
IF NOT ONE INCH ON THIS SHEET, ADJUST SCALES ACCORDINGLY

JOB NO. 10976A.10
DRAWING NO. 02C21
SHEET NO. 255 OF 464

LAST SAVED BY: dseivert

PROJECT NO. 9585A10 FILE NAME: 9585A10_SheetSeed.dgn

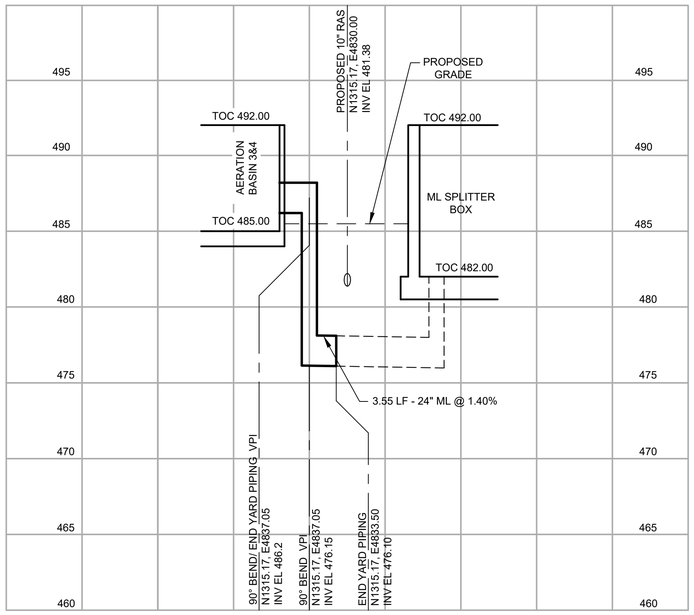

7 02C02 **ML-24"**
SCALE: 1"=10' HORIZ, 1"= 5' VERTICAL
FILE:

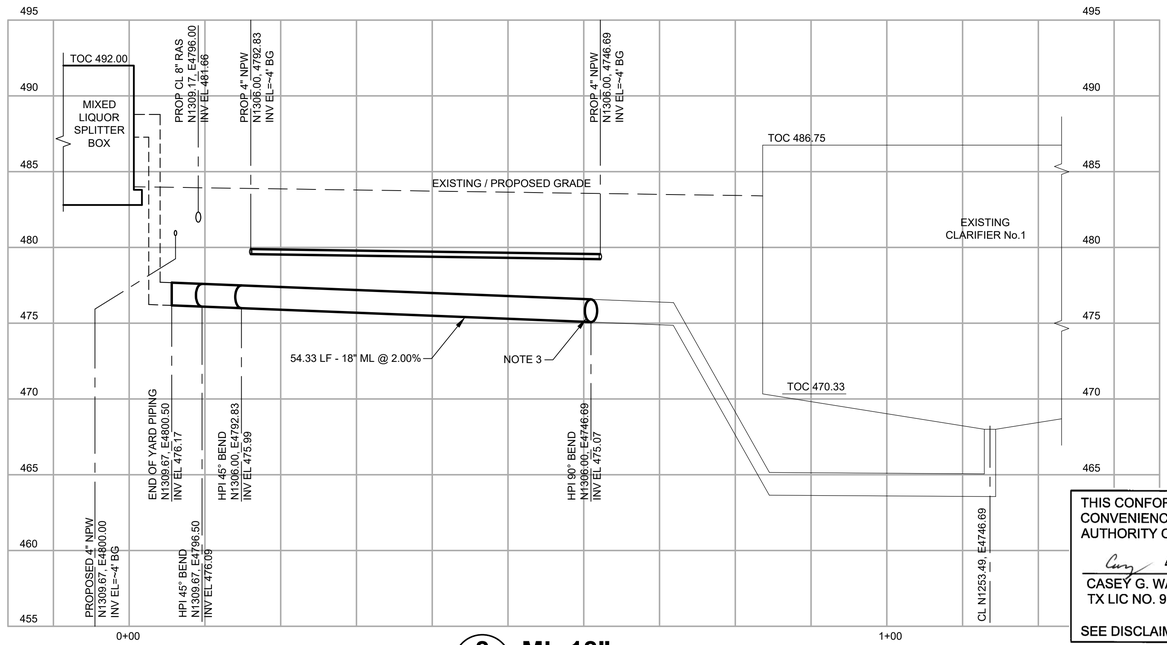

8 02C02 **ML-18"**
SCALE: 1"=10' HORIZ, 1"= 5' VERTICAL
FILE:

NOTES:

1. PROPOSED PIPING ON THIS DRAWING IS SHOWING THE FINAL LAYOUT. REFERENCE SHEETS 02D01 TO 02D05 FOR EXISTING PIPING DEMOLITION ABANDONMENT, AND CONSTRUCTION PHASING.
2. EXISTING YARD PIPING INFORMATION SHOWN ON THIS DRAWING IS FROM RECORD DRAWINGS. ACTUAL FIELD CONDITIONS MAY BE DIFFERENT FROM THOSE SHOWN IN THIS DRAWING. CONTRACTOR TO FIELD VERIFY INSTALLED CONDITIONS IMPACTING OR IMPACTED BY THIS WORK PRIOR TO INITIATING WORK.
3. CONNECT TO EXISTING 18" ML INFRASTRUCTURE WITH 90° BEND.
4. ROTATE 90° VPI FITTING TO ACHIEVE HPI 45° BEND IN PIPE.

THIS CONFORMED DOCUMENT IS RELEASED FOR THE CONVENIENCE OF THE CONTRACTOR UNDER THE AUTHORITY OF:

CASEY G. WAUTERS, P.E.
TX LIC NO. 93889

11-01-22
DATE

SEE DISCLAIMER FOR LIMITATIONS OF USE.

CONTRACT DOCUMENTS DATED JUNE 10, 2022, AS PART OF THE BIDDING DOCUMENTS (DRAWINGS AND SPECIFICATIONS) AND SUBSEQUENTLY ISSUED ADDENDA HAVE BEEN MERGED INTO ONE CONFORMING SET OF DOCUMENTS FOR THE CONVENIENCE OF THE CONTRACTOR. IF INCONSISTENCIES OR AMBIGUITIES BETWEEN "CONFORMED" DOCUMENTS AND CONTRACT DOCUMENTS ARE FOUND, THE CONTRACT DOCUMENTS SHALL GOVERN.

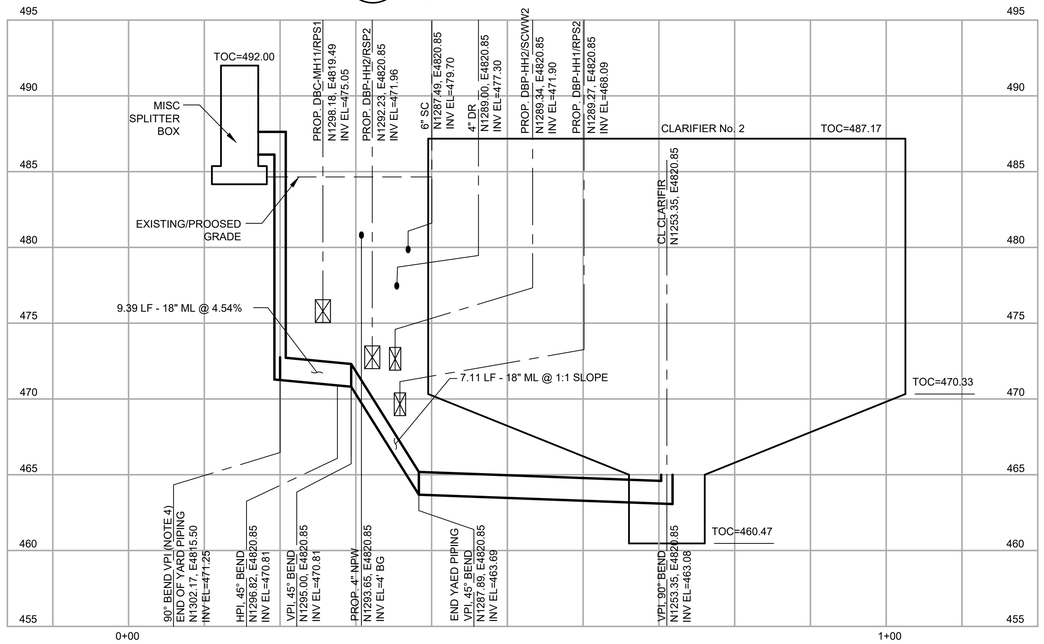

9 02C02 **ML-18"**
SCALE: 1"=10' HORIZ, 1"= 5' VERTICAL
FILE:

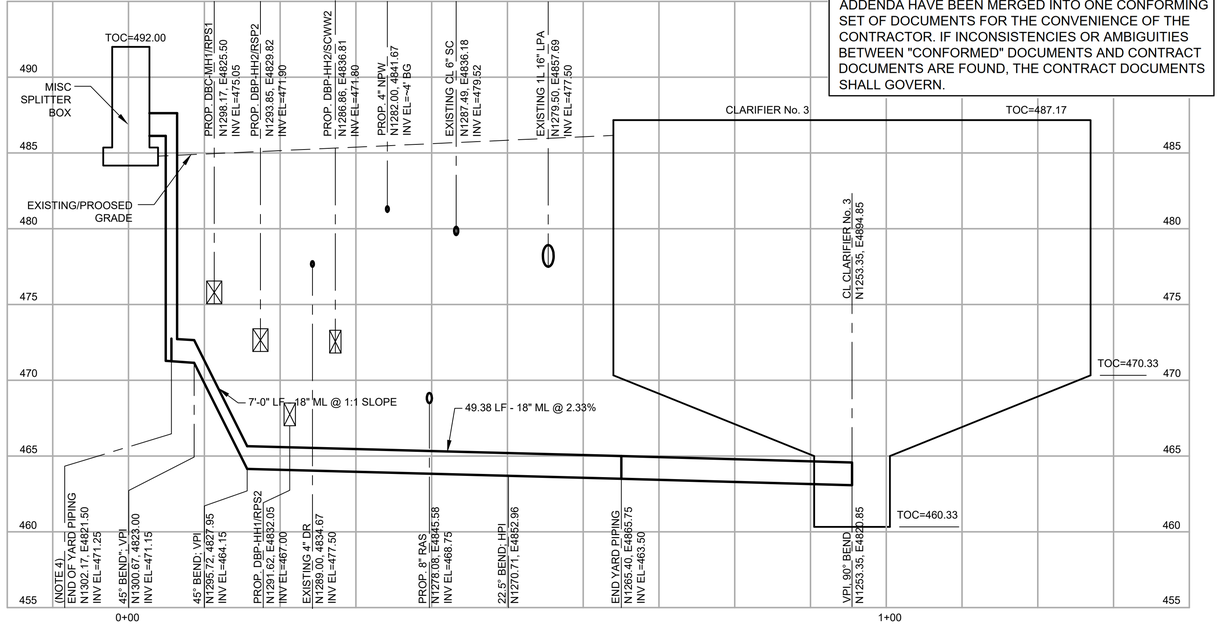

10 02C02 **ML-18"**
SCALE: 1"=10' HORIZ, 1"= 5' VERTICAL
FILE:

REV	DATE	BY	DESCRIPTION
			CONFORMED DOCUMENTS

DESIGNED NL/CW
DRAWN AW
CHECKED SGE
DATE FEBRUARY 2022

**
ORIGINAL
SEALED BY
CASEY G. WAUTERS, P.E.
2/28/2022
TX PE 93889
**

AECOM TECHNICAL SERVICES INC.
13640 BRIARWICK DRIVE, SUITE 200
AUSTIN, TEXAS 78729
WWW.AECOM.COM
TBPE REG. NO. F-3580

TBPE No. F-882

CITY OF AUSTIN

CITY OF AUSTIN
WILD HORSE RANCH WWTP EXPANSION
CIVIL
YARD PIPING PROFILES
SHEET 3 OF 19

VERIFY SCALES
BAR IS ONE INCH ON ORIGINAL DRAWING
0 1"
IF NOT ONE INCH ON THIS SHEET, ADJUST SCALES ACCORDINGLY

JOB NO. 10976A.10
DRAWING NO. 02C22
SHEET NO. 256 OF 464

LAST SAVED BY: dseivert

PROJECT NO. 9585A10 FILE NAME: 9585A10_SheetSeed.dgn

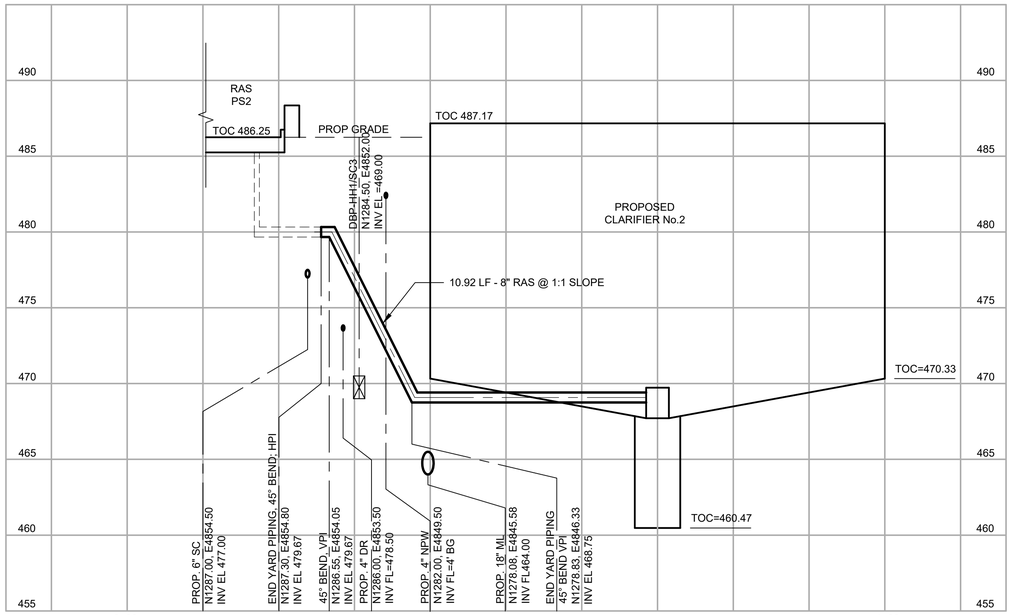

11 02C01 **RAS-8"**
SCALE: 1"=10' HORIZ, 1"= 5' VERTICAL
FILE:

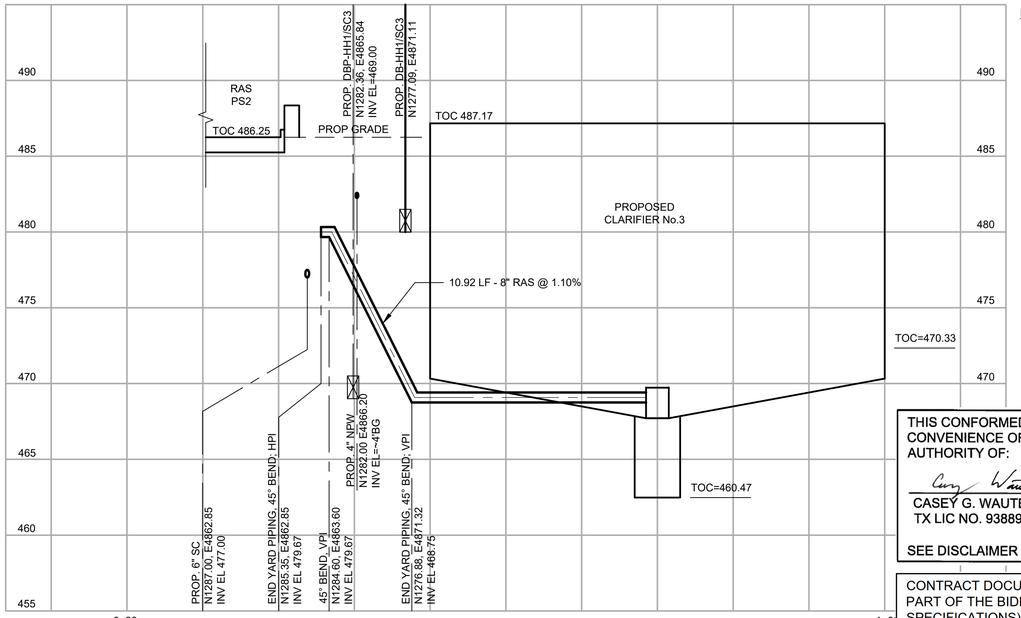

12 02C01 **RAS-8"**
SCALE: 1"=10' HORIZ, 1"= 5' VERTICAL
FILE:

NOTES:

1. PROPOSED PIPING ON THIS DRAWING IS SHOWING THE FINAL LAYOUT. REFERENCE SHEETS 02D01 TO 02D05 FOR EXISTING PIPING DEMOLITION ABANDONMENT, AND CONSTRUCTION PHASING.
2. EXISTING YARD PIPING INFORMATION SHOWN ON THIS DRAWING IS FROM RECORD DRAWINGS. ACTUAL FIELD CONDITIONS MAY BE DIFFERENT FROM THOSE SHOWN IN THIS DRAWING. CONTRACTOR TO FIELD VERIFY INSTALLED CONDITIONS IMPACTING OR IMPACTED BY THIS WORK PRIOR TO INITIATING WORK.
3. ROTATE 90° VPI FITTING TO ACHIEVE HPI 45° BEND IN PIPE.

THIS CONFORMED DOCUMENT IS RELEASED FOR THE CONVENIENCE OF THE CONTRACTOR UNDER THE AUTHORITY OF:

CASEY G. WAUTERS, P.E.
TX LIC NO. 93889

11-01-22
DATE

SEE DISCLAIMER FOR LIMITATIONS OF USE.

CONTRACT DOCUMENTS DATED JUNE 10, 2022, AS PART OF THE BIDDING DOCUMENTS (DRAWINGS AND SPECIFICATIONS) AND SUBSEQUENTLY ISSUED ADDENDA HAVE BEEN MERGED INTO ONE CONFORMING SET OF DOCUMENTS FOR THE CONVENIENCE OF THE CONTRACTOR. IF INCONSISTENCIES OR AMBIGUITIES BETWEEN "CONFORMED" DOCUMENTS AND CONTRACT DOCUMENTS ARE FOUND, THE CONTRACT DOCUMENTS SHALL GOVERN.

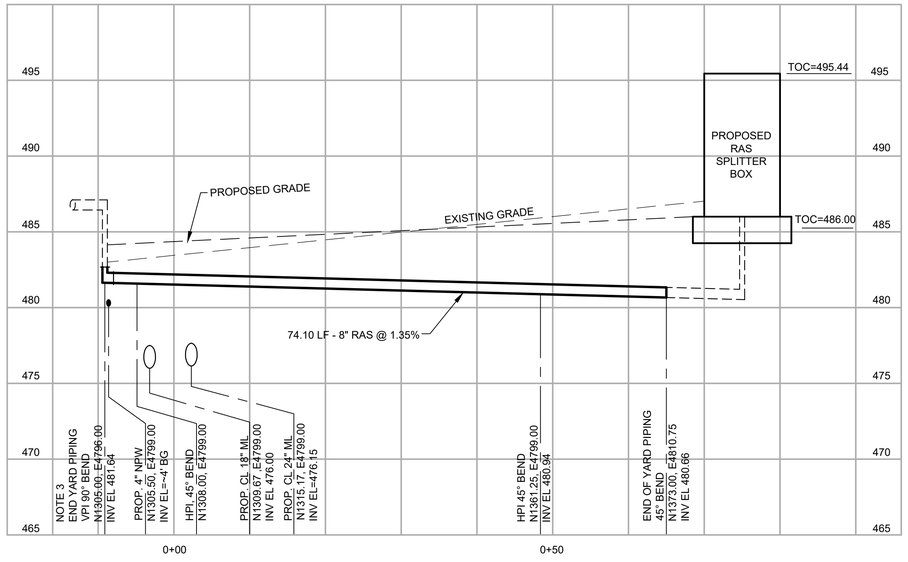

13 02C01 **RAS-8"**
SCALE: 1"=10' HORIZ, 1"= 5' VERTICAL
FILE:

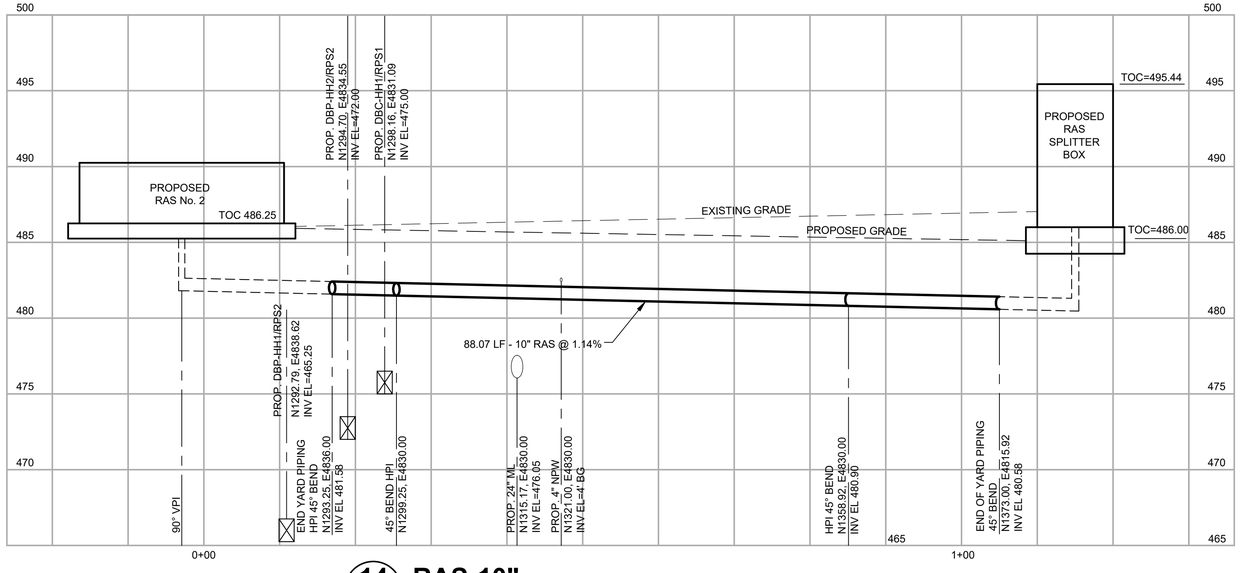

14 02C02 **RAS-10"**
SCALE: 1"=10' HORIZ, 1"= 5' VERTICAL
FILE:

REV	DATE	BY	DESCRIPTION
			CONFORMED DOCUMENTS

DESIGNED NL/CW
DRAWN AW
CHECKED SGE
DATE FEBRUARY 2022

**
ORIGINAL
SEALED BY
CASEY G. WAUTERS, P.E.
2/28/2022
TX PE 93889
**

AECOM TECHNICAL SERVICES INC.
13640 BRIARWICK DRIVE, SUITE 200
AUSTIN, TEXAS 78729
WWW.AECOM.COM
TBPE REG. NO. F-3580

TBPE No. F-882

CITY OF AUSTIN

CITY OF AUSTIN
WILD HORSE RANCH WWTP EXPANSION
CIVIL
YARD PIPING PROFILES
SHEET 4 OF 19

VERIFY SCALES
BAR IS ONE INCH ON ORIGINAL DRAWING
0 1"
IF NOT ONE INCH ON THIS SHEET, ADJUST SCALES ACCORDINGLY

JOB NO. 10976A.10
DRAWING NO. 02C23
SHEET NO. 257 OF 464

LAST SAVED BY: dseivert

PROJECT NO. 9585A10 FILE NAME: 9585A10_SheetSeed.dgn

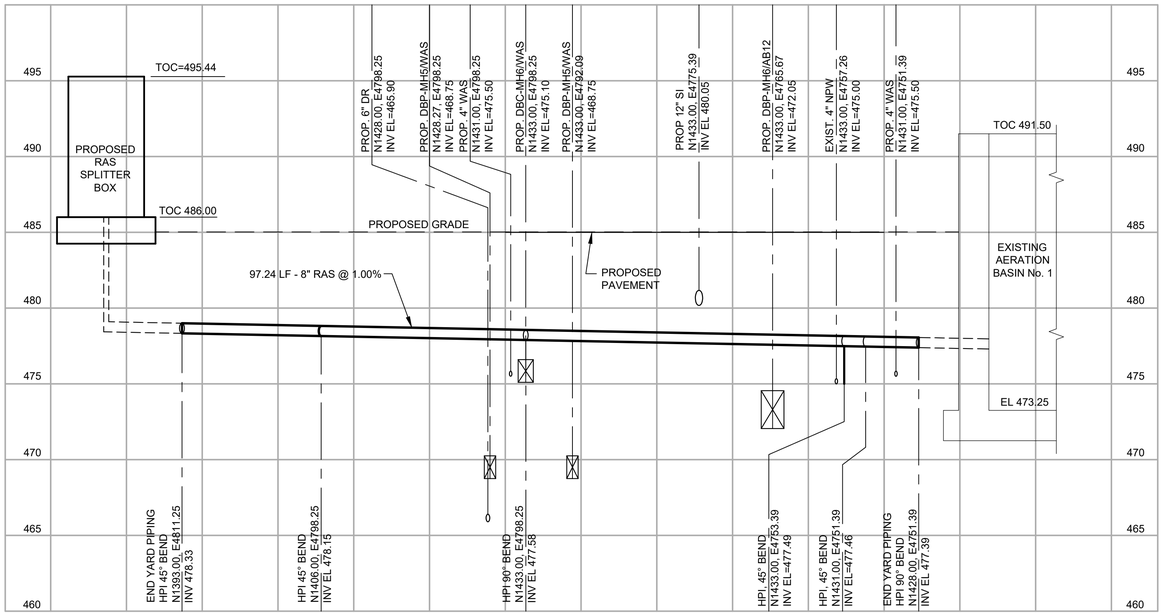

15 02C02 **RAS-8"**
SCALE: 1"=10' HORIZ, 1"= 5' VERTICAL
FILE:

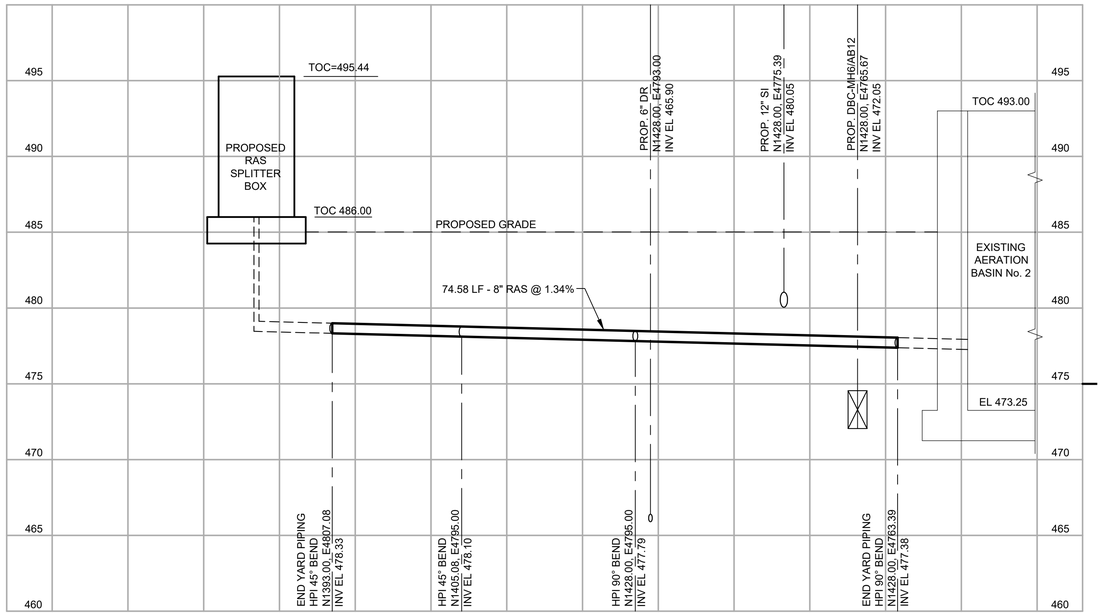

16 02C02 **RAS-8"**
SCALE: 1"=10' HORIZ, 1"= 5' VERTICAL
FILE:

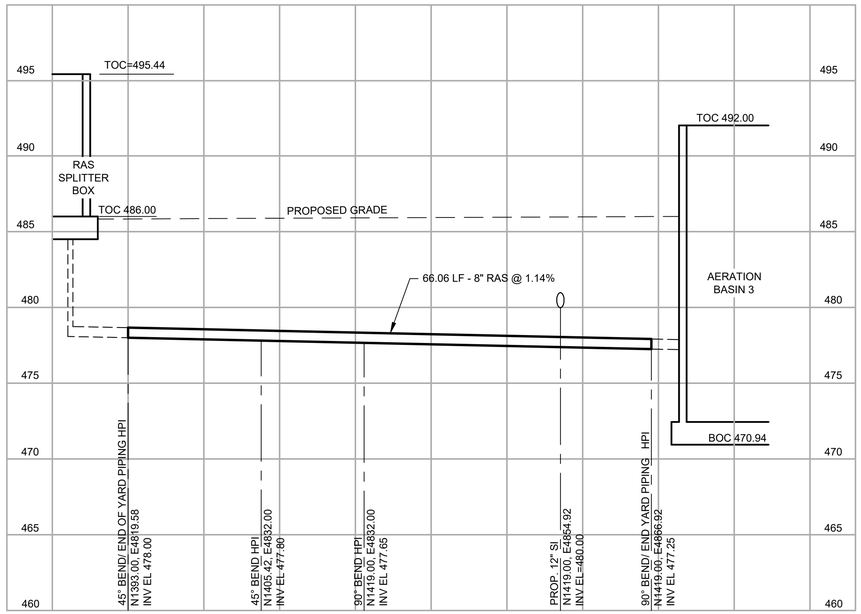

17 02C02 **RAS-8"**
SCALE: 1"=10' HORIZ, 1"= 5' VERTICAL
FILE:

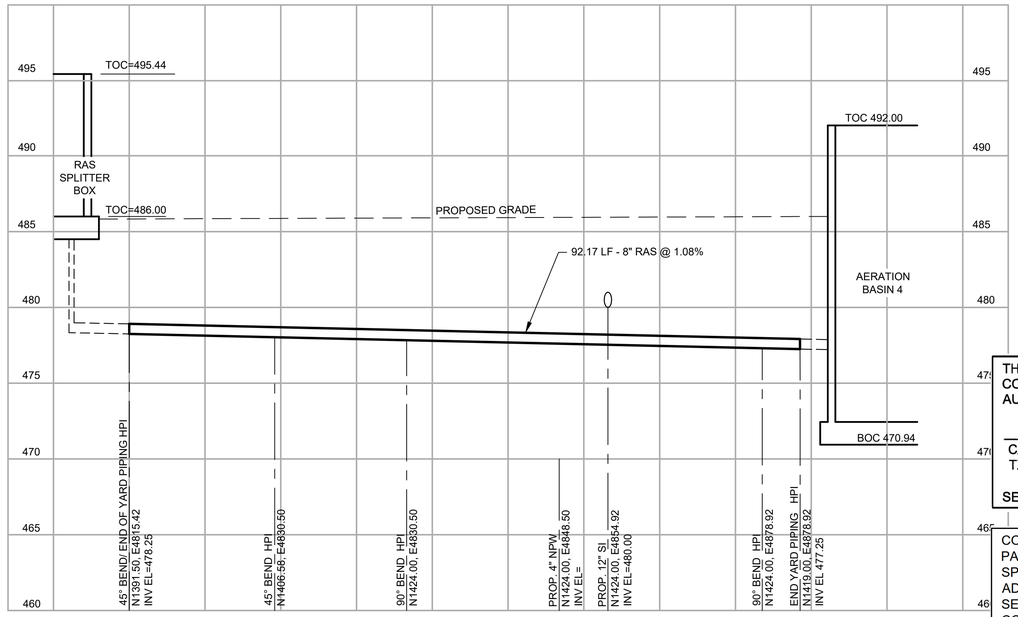

18 02C02 **RAS-8"**
SCALE: 1"=10' HORIZ, 1"= 5' VERTICAL
FILE:

NOTES:

1. PROPOSED PIPING ON THIS DRAWING IS SHOWING THE FINAL LAYOUT. REFERENCE SHEETS 02D01 TO 02D05 FOR EXISTING PIPING DEMOLITION ABANDONMENT, AND CONSTRUCTION PHASING.
2. EXISTING YARD PIPING INFORMATION SHOWN ON THIS DRAWING IS FROM RECORD DRAWINGS. ACTUAL FIELD CONDITIONS MAY BE DIFFERENT FROM THOSE SHOWN IN THIS DRAWING. CONTRACTOR TO FIELD VERIFY INSTALLED CONDITIONS IMPACTING OR IMPACTED BY THIS WORK PRIOR TO INITIATING WORK.

THIS CONFORMED DOCUMENT IS RELEASED FOR THE CONVENIENCE OF THE CONTRACTOR UNDER THE AUTHORITY OF:

CASEY G. WAUTERS, P.E. — 11-01-22
TX LIC NO. 93889 — DATE

SEE DISCLAIMER FOR LIMITATIONS OF USE.

CONTRACT DOCUMENTS DATED JUNE 10, 2022, AS PART OF THE BIDDING DOCUMENTS (DRAWINGS AND SPECIFICATIONS) AND SUBSEQUENTLY ISSUED ADDENDA HAVE BEEN MERGED INTO ONE CONFORMING SET OF DOCUMENTS FOR THE CONVENIENCE OF THE CONTRACTOR. IF INCONSISTENCIES OR AMBIGUITIES BETWEEN "CONFORMED" DOCUMENTS AND CONTRACT DOCUMENTS ARE FOUND, THE CONTRACT DOCUMENTS SHALL GOVERN.

REV	DATE	BY	DESCRIPTION
			CONFORMED DOCUMENTS

DESIGNED NL/CW
DRAWN AW
CHECKED SGE
DATE FEBRUARY 2022

**
ORIGINAL
SEALED BY
CASEY G. WAUTERS, P.E.
2/28/2022
TX PE 93889
**

AECOM TECHNICAL SERVICES INC.
13640 BRIARWICK DRIVE, SUITE 200
AUSTIN, TEXAS 78729
WWW.AECOM.COM
TBPE REG. NO. F-3580

TBPE No. F-882

CITY OF AUSTIN

CITY OF AUSTIN
WILD HORSE RANCH WWTP EXPANSION
CIVIL
YARD PIPING PROFILES
SHEET 5 OF 19

VERIFY SCALES
BAR IS ONE INCH ON ORIGINAL DRAWING
0 — 1"
IF NOT ONE INCH ON THIS SHEET, ADJUST SCALES ACCORDINGLY

JOB NO. 10976A.10
DRAWING NO. 02C24
SHEET NO. 258 OF 464

LAST SAVED BY: dseivert

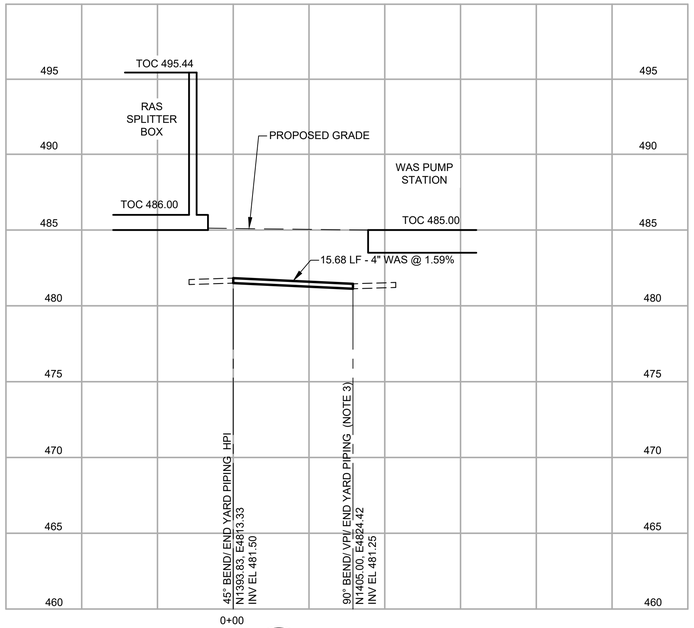

19 02C02 **WAS-4"**
SCALE: 1"=10' HORIZ, 1"= 5' VERTICAL
FILE:

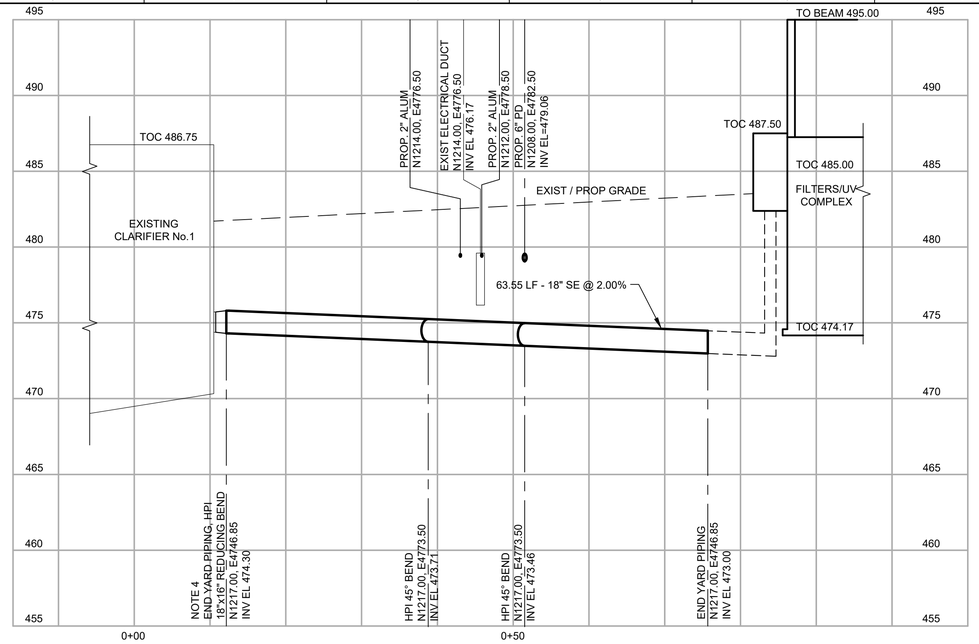

20 02C02 **SE-18"**
SCALE: 1"=10' HORIZ, 1"= 5' VERTICAL
FILE:

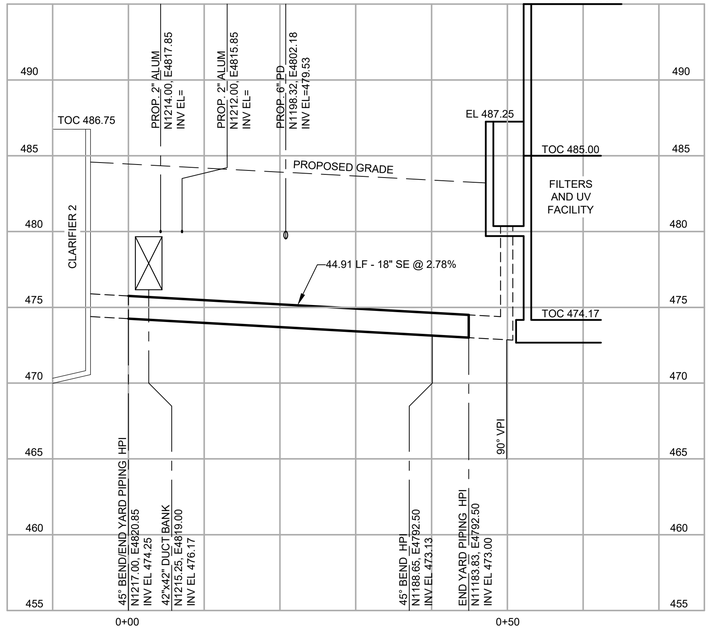

21 02C02 **SE-18"**
SCALE: 1"=10' HORIZ, 1"= 5' VERTICAL
FILE:

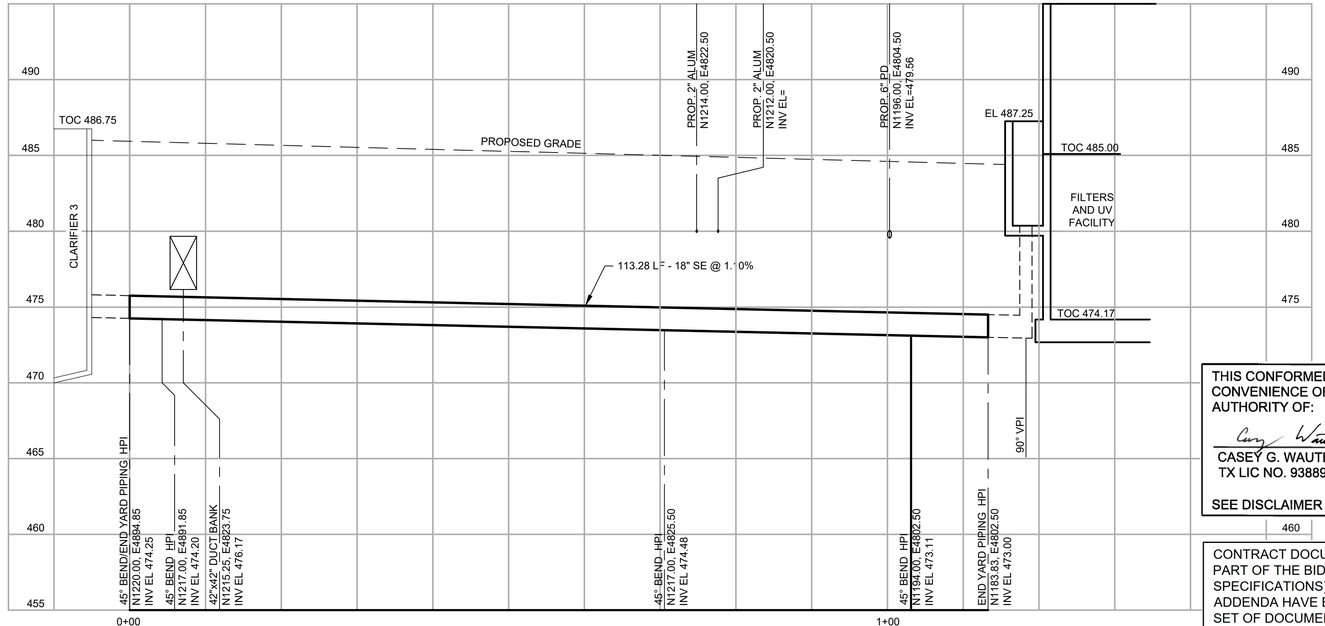

22 02C02 **SE-18"**
SCALE: 1"=10' HORIZ, 1"= 5' VERTICAL
FILE:

NOTES:

1. PROPOSED PIPING ON THIS DRAWING IS SHOWING THE FINAL LAYOUT. REFERENCE SHEETS 02D01 TO 02D05 FOR EXISTING PIPING DEMOLITION ABANDONMENT, AND CONSTRUCTION PHASING.
2. EXISTING YARD PIPING INFORMATION SHOWN ON THIS DRAWING IS FROM RECORD DRAWINGS. ACTUAL FIELD CONDITIONS MAY BE DIFFERENT FROM THOSE SHOWN IN THIS DRAWING. CONTRACTOR TO FIELD VERIFY INSTALLED CONDITIONS IMPACTING OR IMPACTED BY THIS WORK PRIOR TO INITIATING WORK.
3. ROTATE 90° VPI FITTING TO ARCHIVE HPI 45° BEND IN PIPE.
4. CONNECT TO EXISTING 16" SE.

THIS CONFORMED DOCUMENT IS RELEASED FOR THE CONVENIENCE OF THE CONTRACTOR UNDER THE AUTHORITY OF:

CASEY G. WAUTERS, P.E.
TX LIC NO. 93889

11-01-22
DATE

SEE DISCLAIMER FOR LIMITATIONS OF USE.

CONTRACT DOCUMENTS DATED JUNE 10, 2022, AS PART OF THE BIDDING DOCUMENTS (DRAWINGS AND SPECIFICATIONS) AND SUBSEQUENTLY ISSUED ADDENDA HAVE BEEN MERGED INTO ONE CONFORMING SET OF DOCUMENTS FOR THE CONVENIENCE OF THE CONTRACTOR. IF INCONSISTENCIES OR AMBIGUITIES BETWEEN "CONFORMED" DOCUMENTS AND CONTRACT DOCUMENTS ARE FOUND, THE CONTRACT DOCUMENTS SHALL GOVERN.

REV	DATE	BY	DESCRIPTION
			CONFORMED DOCUMENTS

DESIGNED NL/CW
DRAWN AW
CHECKED SGE
DATE FEBRUARY 2022

**
ORIGINAL
SEALED BY
CASEY G. WAUTERS, P.E.
2/28/2022
TX PE 93889
**

AECOM TECHNICAL SERVICES INC.
13640 BRIARWICK DRIVE, SUITE 200
AUSTIN, TEXAS 78729
WWW.AECOM.COM
TBPE REG. NO. F-3580

TBPE No. F-882

CITY OF AUSTIN

CITY OF AUSTIN
WILD HORSE RANCH WWTP EXPANSION
CIVIL
YARD PIPING PROFILES
SHEET 6 OF 19

VERIFY SCALES
BAR IS ONE INCH ON ORIGINAL DRAWING
0 1"
IF NOT ONE INCH ON THIS SHEET, ADJUST SCALES ACCORDINGLY

JOB NO. 10976A.10
DRAWING NO. 02C25
SHEET NO. 259 OF 464

LAST SAVED BY: dseivert

PROJECT NO. 9585A10 FILE NAME: 9585A10_SheetSeed.dgn

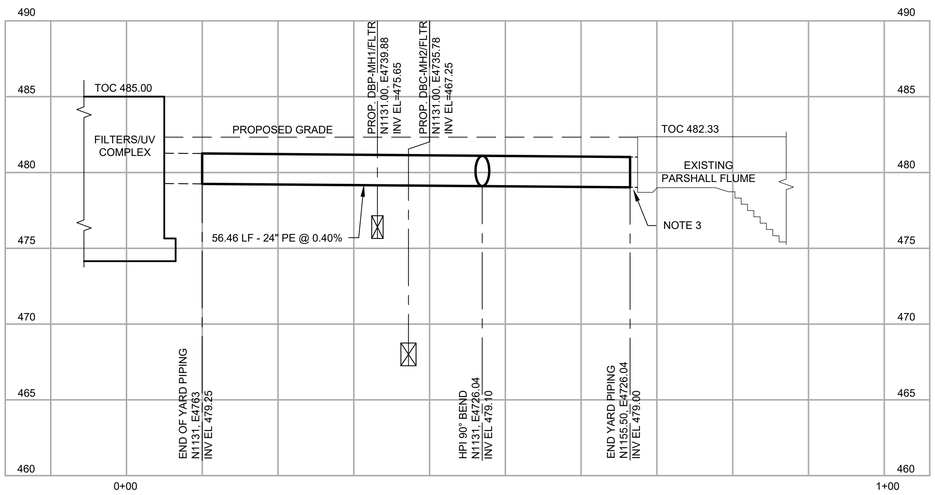

23 02C01 **PE-24"**

SCALE: 1"=10' HORIZ, 1"= 5' VERTICAL
FILE:

NOTES:

1. PROPOSED PIPING ON THIS DRAWING IS SHOWING THE FINAL LAYOUT. REFERENCE SHEETS 02D01 TO 02D05 FOR EXISTING PIPING DEMOLITION ABANDONMENT, AND CONSTRUCTION PHASING.
2. EXISTING YARD PIPING INFORMATION SHOWN ON THIS DRAWING IS FROM RECORD DRAWINGS. ACTUAL FIELD CONDITIONS MAY BE DIFFERENT FROM THOSE SHOWN IN THIS DRAWING. CONTRACTOR TO FIELD VERIFY INSTALLED CONDITIONS IMPACTING OR IMPACTED BY THIS WORK PRIOR TO INITIATING WORK.
3. CONNECT TO EXISTING INFRASTRUCTURE AND REFER TO DEMO SHEET 55D01 AND 55D02 FOR MORE DETAILS.

THIS CONFORMED DOCUMENT IS RELEASED FOR THE CONVENIENCE OF THE CONTRACTOR UNDER THE AUTHORITY OF:

CASEY G. WAUTERS, P.E. 11-01-22
TX LIC NO. 93889 DATE

SEE DISCLAIMER FOR LIMITATIONS OF USE.

CONTRACT DOCUMENTS DATED JUNE 10, 2022, AS PART OF THE BIDDING DOCUMENTS (DRAWINGS AND SPECIFICATIONS) AND SUBSEQUENTLY ISSUED ADDENDA HAVE BEEN MERGED INTO ONE CONFORMING SET OF DOCUMENTS FOR THE CONVENIENCE OF THE CONTRACTOR. IF INCONSISTENCIES OR AMBIGUITIES BETWEEN "CONFORMED" DOCUMENTS AND CONTRACT DOCUMENTS ARE FOUND, THE CONTRACT DOCUMENTS SHALL GOVERN.

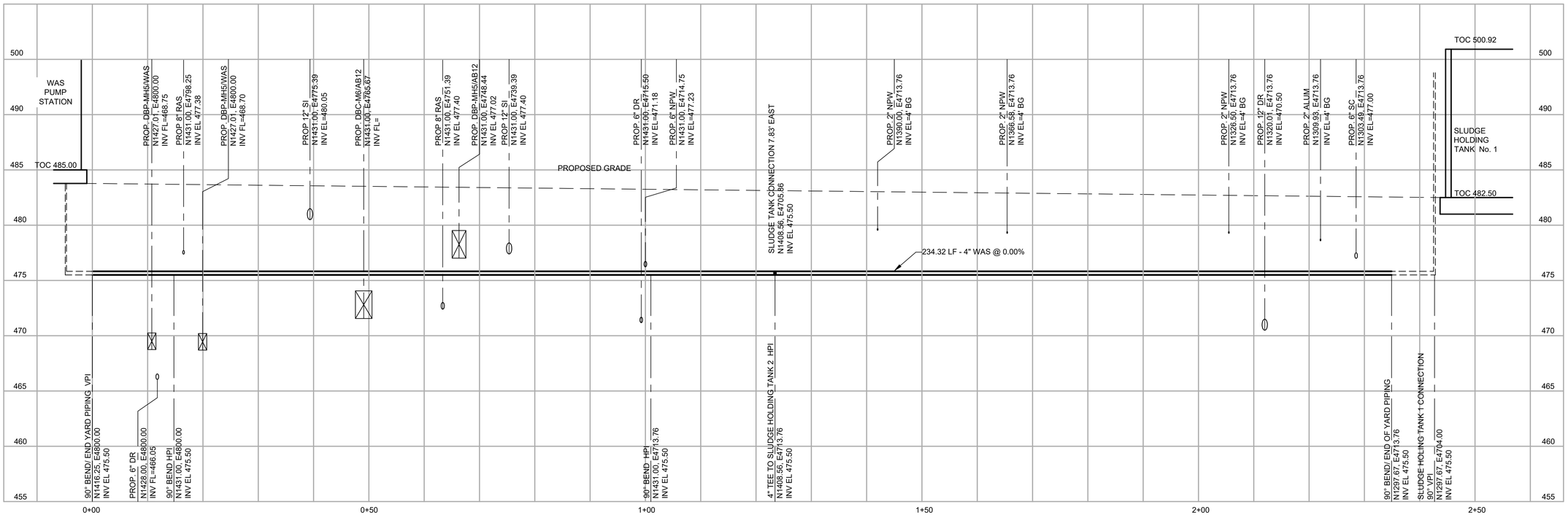

24 02C02 **WAS-4"**

SCALE: 1"=10' HORIZ, 1"= 5' VERTICAL
FILE:

REV	DATE	BY	DESCRIPTION
			CONFORMED DOCUMENTS

DESIGNED NL/CW
DRAWN AW
CHECKED SGE
DATE FEBRUARY 2022

** ORIGINAL SEALED BY CASEY G. WAUTERS, P.E. 2/28/2022 TX PE 93889 **

AECOM TECHNICAL SERVICES INC.
13640 BRIARWICK DRIVE, SUITE 200
AUSTIN, TEXAS 78729
WWW.AECOM.COM
TBPE REG. NO. F-3580

TBPE No. F-882

CITY OF AUSTIN

CITY OF AUSTIN
WILD HORSE RANCH WWTP EXPANSION
CIVIL
YARD PIPING PROFILES
SHEET 7 OF 19

VERIFY SCALES
BAR IS ONE INCH ON ORIGINAL DRAWING
0 1"
IF NOT ONE INCH ON THIS SHEET, ADJUST SCALES ACCORDINGLY

JOB NO. 10976A.10
DRAWING NO. 02C26
SHEET NO. 260 OF 464

LAST SAVED BY: dseivert

PROJECT NO. 9585A10 FILE NAME: 9585A10_SheetSeed.dgn

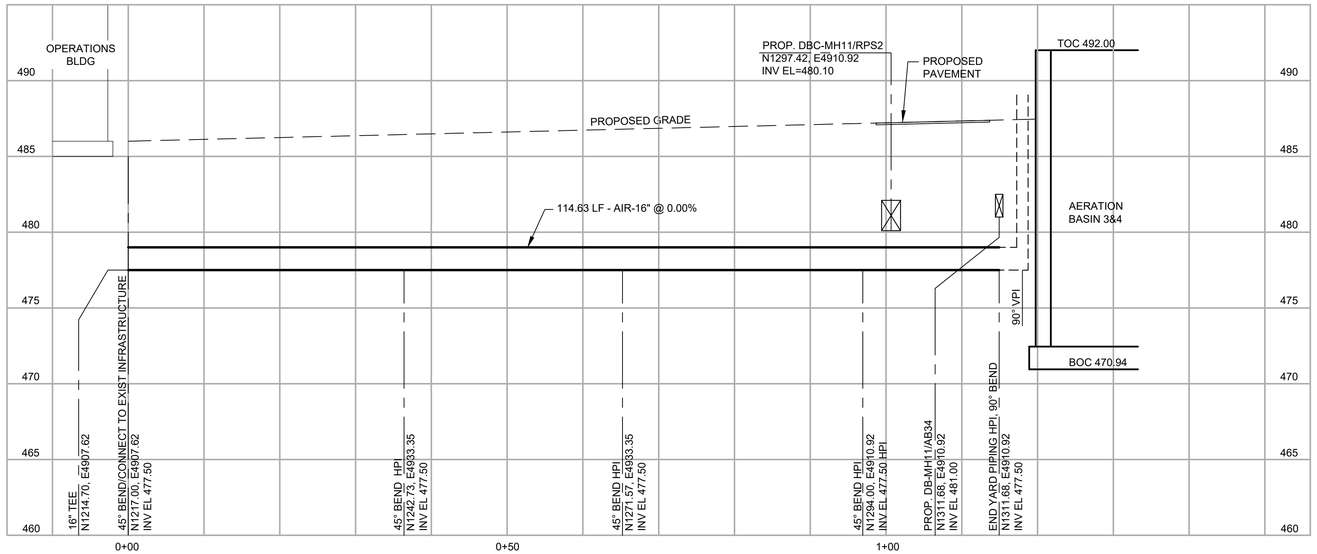

25 02C02 **AIR-16"**

SCALE: 1"=10' HORIZ, 1"= 5' VERTICAL
FILE:

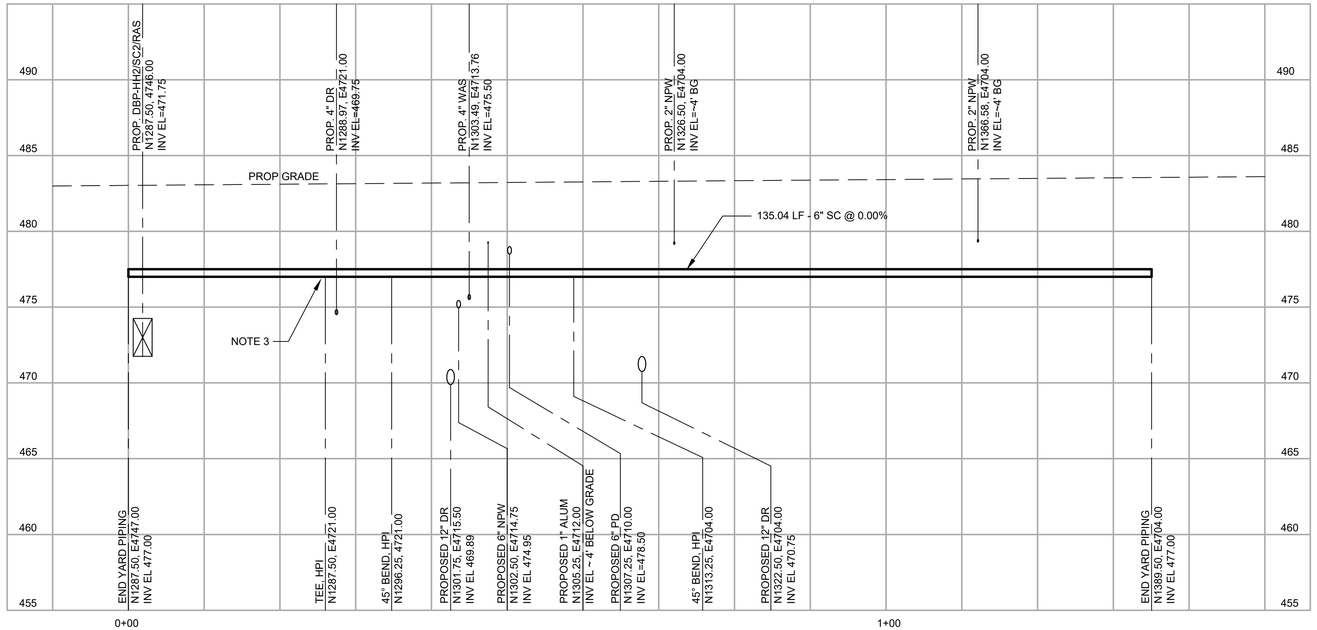

26 02C02 **6" SC**

SCALE: 1"=10' HORIZ, 1"= 5' VERTICAL
FILE:

NOTES:

1. PROPOSED PIPING ON THIS DRAWING IS SHOWING THE FINAL LAYOUT. REFERENCE SHEETS 02D01 TO 02D05 FOR EXISTING PIPING DEMOLITION ABANDONMENT, AND CONSTRUCTION PHASING.
2. EXISTING YARD PIPING INFORMATION SHOWN ON THIS DRAWING IS FROM RECORD DRAWINGS. ACTUAL FIELD CONDITIONS MAY BE DIFFERENT FROM THOSE SHOWN IN THIS DRAWING. CONTRACTOR TO FIELD VERIFY INSTALLED CONDITIONS IMPACTING OR IMPACTED BY THIS WORK PRIOR TO INITIATING WORK.
3. PROFILE FOLLOWS 6" SC NORTH TO SLUDGE HOLDING TANK 2 AT TEE.

THIS CONFORMED DOCUMENT IS RELEASED FOR THE CONVENIENCE OF THE CONTRACTOR UNDER THE AUTHORITY OF:

CASEY G. WAUTERS, P.E. — 11-01-22
TX LIC NO. 93889 — DATE

SEE DISCLAIMER FOR LIMITATIONS OF USE.

CONTRACT DOCUMENTS DATED JUNE 10, 2022, AS PART OF THE BIDDING DOCUMENTS (DRAWINGS AND SPECIFICATIONS) AND SUBSEQUENTLY ISSUED ADDENDA HAVE BEEN MERGED INTO ONE CONFORMING SET OF DOCUMENTS FOR THE CONVENIENCE OF THE CONTRACTOR. IF INCONSISTENCIES OR AMBIGUITIES BETWEEN "CONFORMED" DOCUMENTS AND CONTRACT DOCUMENTS ARE FOUND, THE CONTRACT DOCUMENTS SHALL GOVERN.

REV	DATE	BY	DESCRIPTION
			CONFORMED DOCUMENTS

DESIGNED NL/CW
DRAWN AW
CHECKED SGE
DATE FEBRUARY 2022

** ORIGINAL SEALED BY CASEY G. WAUTERS, P.E. 2/28/2022 TX PE 93889 **

AECOM TECHNICAL SERVICES INC.
13640 BRIARWICK DRIVE, SUITE 200
AUSTIN, TEXAS 78729
WWW.AECOM.COM
TBPE REG. NO. F-3580

TBPE No. F-882

CITY OF AUSTIN

CITY OF AUSTIN
WILD HORSE RANCH WWTP EXPANSION
CIVIL
YARD PIPING PROFILES
SHEET 8 OF 19

VERIFY SCALES
BAR IS ONE INCH ON ORIGINAL DRAWING
0 — 1"
IF NOT ONE INCH ON THIS SHEET, ADJUST SCALES ACCORDINGLY

JOB NO. 10976A.10
DRAWING NO. 02C27
SHEET NO. 261 OF 464

LAST SAVED BY: dseivert

PROJECT NO. 9585A10 FILE NAME: 9585A10_SheetSeed.dgn

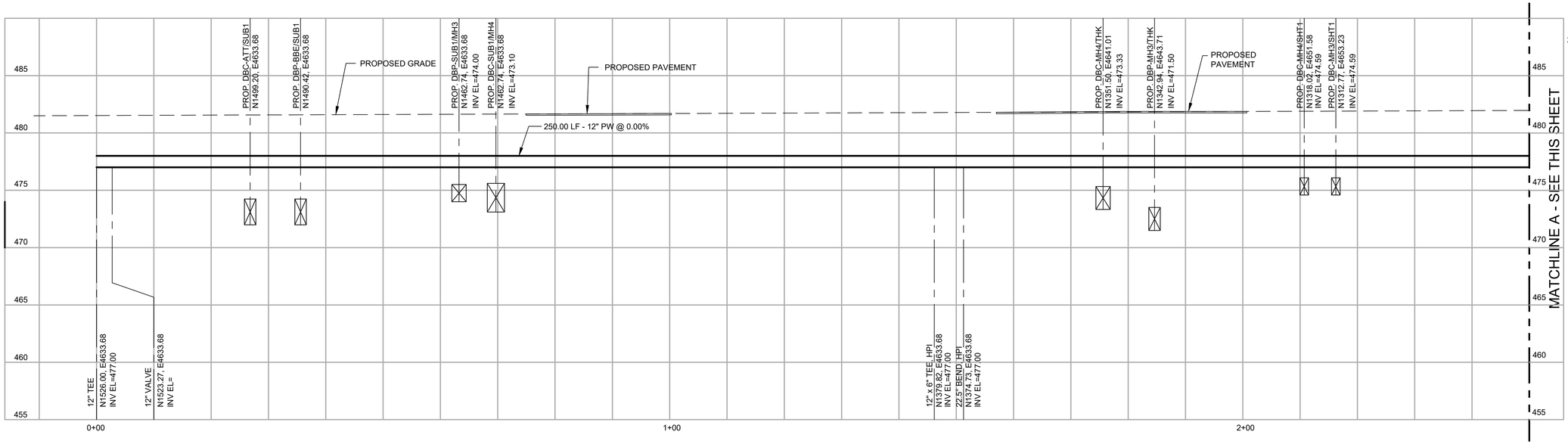

27 02C01 **12" NON-POTABLE FIRE WATER**

SCALE: 1"=10' HORIZ, 1"= 5' VERTICAL
FILE:

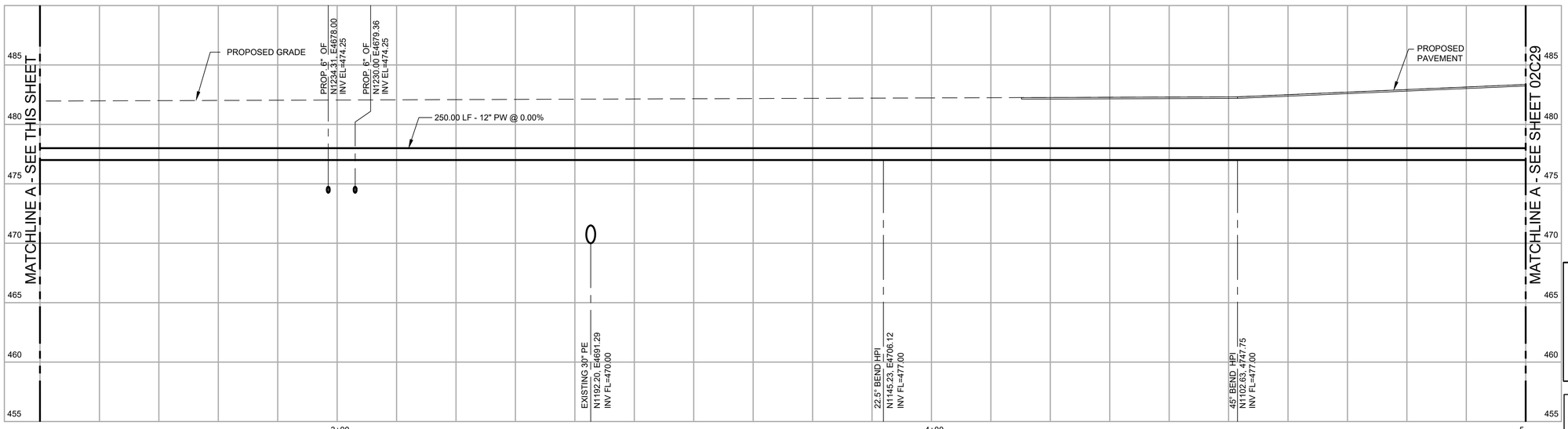

27 02C01 **12" NON-POTABLE FIRE WATER**

SCALE: 1"=10' HORIZ, 1"= 5' VERTICAL
FILE:

NOTES:

1. PROPOSED PIPING ON THIS DRAWING IS SHOWING THE FINAL LAYOUT. REFERENCE SHEETS 02D01 TO 02D05 FOR EXISTING PIPING DEMOLITION ABANDONMENT, AND CONSTRUCTION PHASING.
2. EXISTING YARD PIPING INFORMATION SHOWN ON THIS DRAWING IS FROM RECORD DRAWINGS. ACTUAL FIELD CONDITIONS MAY BE DIFFERENT FROM THOSE SHOWN IN THIS DRAWING. CONTRACTOR TO FIELD VERIFY INSTALLED CONDITIONS IMPACTING OR IMPACTED BY THIS WORK PRIOR TO INITIATING WORK.

THIS CONFORMED DOCUMENT IS RELEASED FOR THE CONVENIENCE OF THE CONTRACTOR UNDER THE AUTHORITY OF:

CASEY G. WAUTERS, P.E.
TX LIC NO. 93889

11-01-22
DATE

SEE DISCLAIMER FOR LIMITATIONS OF USE.

CONTRACT DOCUMENTS DATED JUNE 10, 2022, AS PART OF THE BIDDING DOCUMENTS (DRAWINGS AND SPECIFICATIONS) AND SUBSEQUENTLY ISSUED ADDENDA HAVE BEEN MERGED INTO ONE CONFORMING SET OF DOCUMENTS FOR THE CONVENIENCE OF THE CONTRACTOR. IF INCONSISTENCIES OR AMBIGUITIES BETWEEN "CONFORMED" DOCUMENTS AND CONTRACT DOCUMENTS ARE FOUND, THE CONTRACT DOCUMENTS SHALL GOVERN.

REV	DATE	BY	DESCRIPTION
			CONFORMED DOCUMENTS

DESIGNED NL/CW
DRAWN AW
CHECKED SGE
DATE MAY 2022

** ORIGINAL SEALED BY CASEY G. WAUTERS, P.E. 5/9/2022 TX PE 93889 **

AECOM TECHNICAL SERVICES INC.
13640 BRIARWICK DRIVE, SUITE 200
AUSTIN, TEXAS 78729
WWW.AECOM.COM
TBPE REG. NO. F-3580

carollo
TBPE No. F-882

CITY OF AUSTIN

CITY OF AUSTIN
WILD HORSE RANCH WWTP EXPANSION
CIVIL
YARD PIPING PROFILES
SHEET 9 OF 19

VERIFY SCALES
BAR IS ONE INCH ON ORIGINAL DRAWING
0 1"
IF NOT ONE INCH ON THIS SHEET, ADJUST SCALES ACCORDINGLY

JOB NO. 10976A.10
DRAWING NO. 02C28
SHEET NO. 262 OF 464

LAST SAVED BY: dseivert

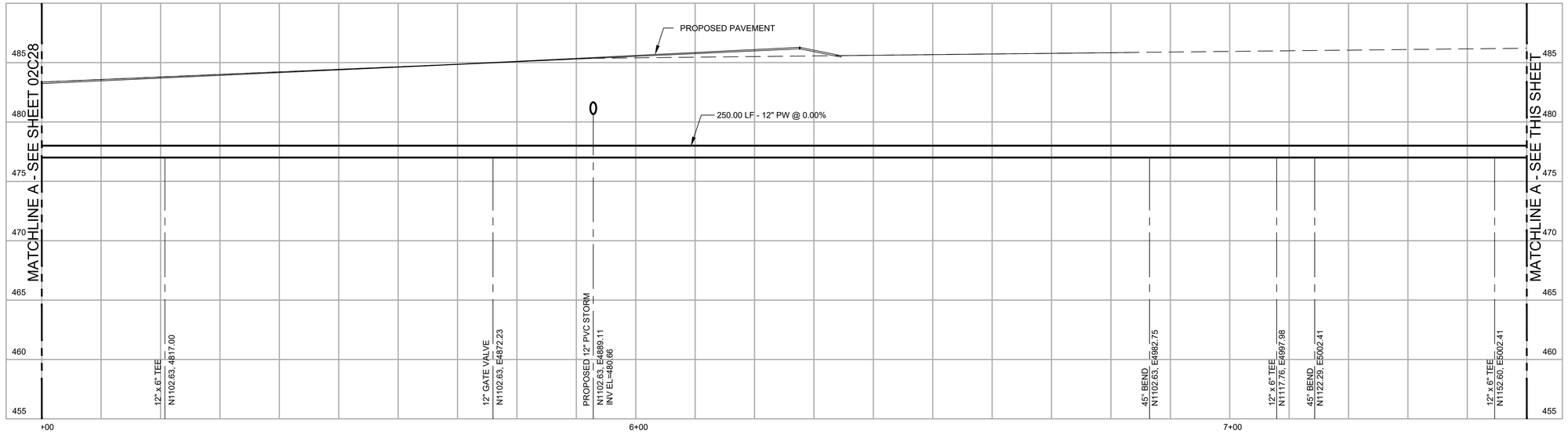

27 02C01 **12" NON-POTABLE FIRE WATER**

SCALE: 1"=10' HORIZ, 1"= 5' VERTICAL
FILE:

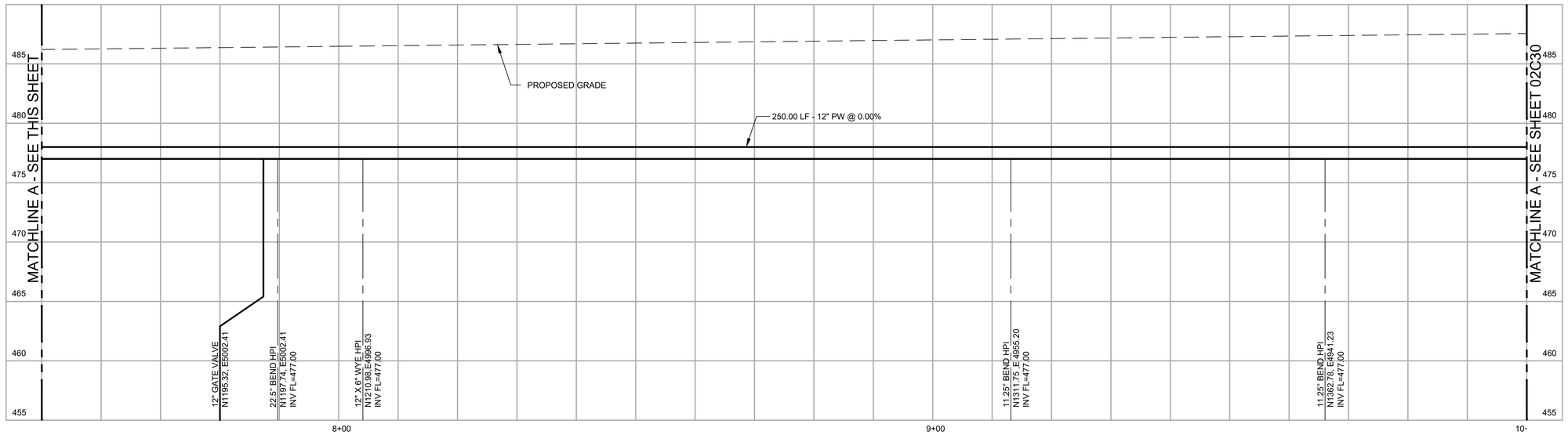

27 02C01 **12" NON-POTABLE FIRE WATER**

SCALE: 1"=10' HORIZ, 1"= 5' VERTICAL
FILE:

NOTES:

1. PROPOSED PIPING ON THIS DRAWING IS SHOWING THE FINAL LAYOUT. REFERENCE SHEETS 02D01 TO 02D05 FOR EXISTING PIPING DEMOLITION ABANDONMENT, AND CONSTRUCTION PHASING.
2. EXISTING YARD PIPING INFORMATION SHOWN ON THIS DRAWING IS FROM RECORD DRAWINGS. ACTUAL FIELD CONDITIONS MAY BE DIFFERENT FROM THOSE SHOWN IN THIS DRAWING. CONTRACTOR TO FIELD VERIFY INSTALLED CONDITIONS IMPACTING OR IMPACTED BY THIS WORK PRIOR TO INITIATING WORK.

THIS CONFORMED DOCUMENT IS RELEASED FOR THE CONVENIENCE OF THE CONTRACTOR UNDER THE AUTHORITY OF:

CASEY G. WAUTERS, P.E.
TX LIC NO. 93889

11-01-22
DATE

SEE DISCLAIMER FOR LIMITATIONS OF USE.

CONTRACT DOCUMENTS DATED JUNE 10, 2022, AS PART OF THE BIDDING DOCUMENTS (DRAWINGS AND SPECIFICATIONS) AND SUBSEQUENTLY ISSUED ADDENDA HAVE BEEN MERGED INTO ONE CONFORMING SET OF DOCUMENTS FOR THE CONVENIENCE OF THE CONTRACTOR. IF INCONSISTENCIES OR AMBIGUITIES BETWEEN "CONFORMED" DOCUMENTS AND CONTRACT DOCUMENTS ARE FOUND, THE CONTRACT DOCUMENTS SHALL GOVERN.

REV	DATE	BY	DESCRIPTION
			CONFORMED DOCUMENTS

DESIGNED NL/CW
DRAWN AW
CHECKED SGE
DATE MAY 2022

ORIGINAL SEALED BY CASEY G. WAUTERS, P.E. 5/9/2022 TX PE 93889

AECOM TECHNICAL SERVICES INC.
13640 BRIARWICK DRIVE, SUITE 200
AUSTIN, TEXAS 78729
WWW.AECOM.COM
TBPE REG. NO. F-3580

TBPE No. F-882

CITY OF AUSTIN

CITY OF AUSTIN
WILD HORSE RANCH WWTP EXPANSION
CIVIL
YARD PIPING PROFILES
SHEET 10 OF 19

VERIFY SCALES
BAR IS ONE INCH ON ORIGINAL DRAWING
0 1"
IF NOT ONE INCH ON THIS SHEET, ADJUST SCALES ACCORDINGLY

JOB NO. 10976A.10
DRAWING NO. 02C29
SHEET NO. 263 OF 464

LAST SAVED BY: dseivert

PROJECT NO. 9585A10 FILE NAME: 9585A10_SheetSeed.dgn

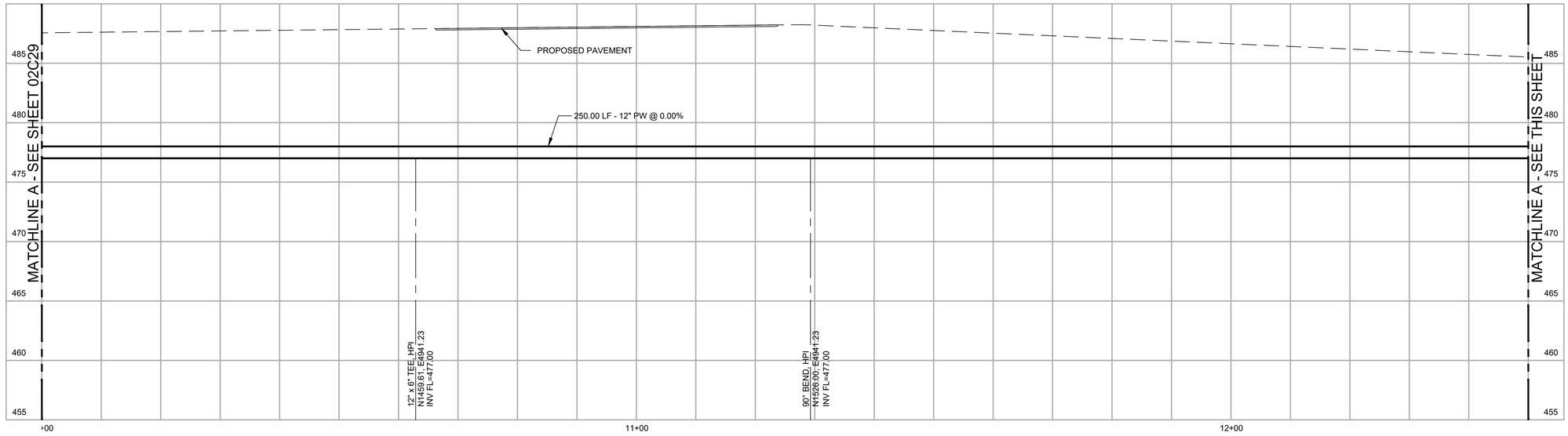

27 02C01 12" NON-POTABLE FIRE WATER

SCALE: 1"=10' HORIZ, 1"= 5' VERTICAL
FILE:

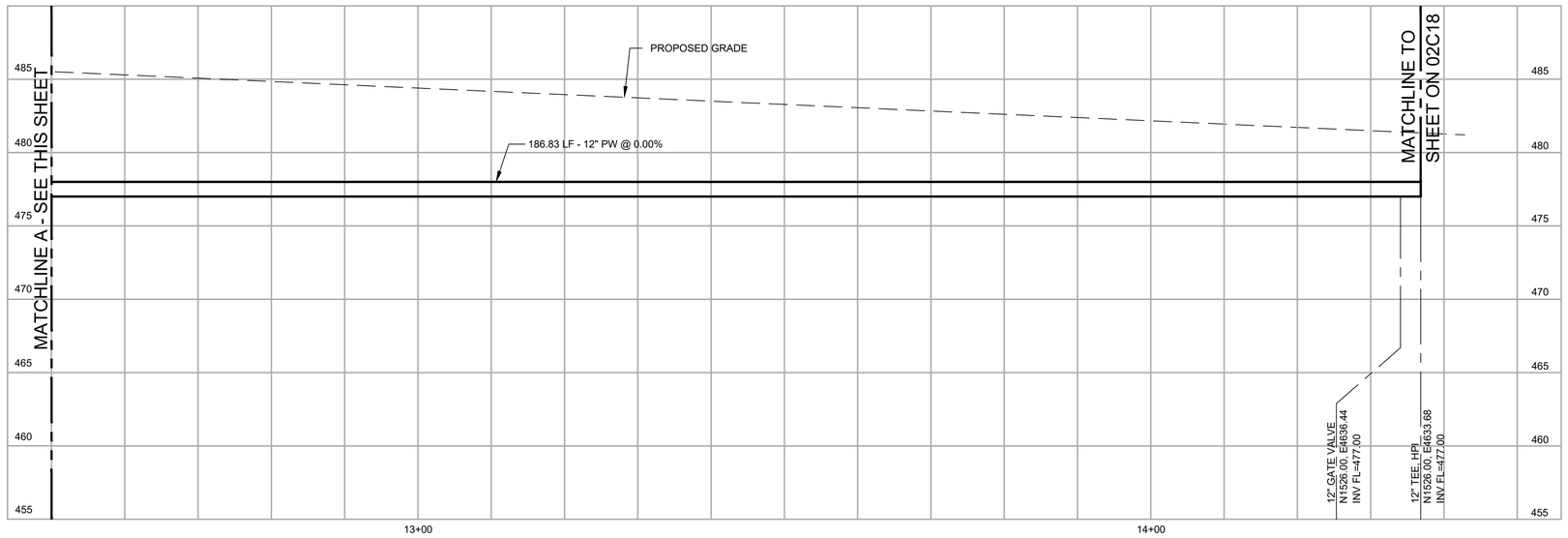

27 02C01 12" NON-POTABLE FIRE WATER

SCALE: 1"=10' HORIZ, 1"= 5' VERTICAL
FILE:

NOTES:

1. PROPOSED PIPING ON THIS DRAWING IS SHOWING THE FINAL LAYOUT. REFERENCE SHEETS 02D01 TO 02D05 FOR EXISTING PIPING DEMOLITION ABANDONMENT, AND CONSTRUCTION PHASING.
2. EXISTING YARD PIPING INFORMATION SHOWN ON THIS DRAWING IS FROM RECORD DRAWINGS. ACTUAL FIELD CONDITIONS MAY BE DIFFERENT FROM THOSE SHOWN IN THIS DRAWING. CONTRACTOR TO FIELD VERIFY INSTALLED CONDITIONS IMPACTING OR IMPACTED BY THIS WORK PRIOR TO INITIATING WORK.

THIS CONFORMED DOCUMENT IS RELEASED FOR THE CONVENIENCE OF THE CONTRACTOR UNDER THE AUTHORITY OF:

CASEY G. WAUTERS, P.E.
TX LIC NO. 93889

11-01-22
DATE

SEE DISCLAIMER FOR LIMITATIONS OF USE.

CONTRACT DOCUMENTS DATED JUNE 10, 2022, AS PART OF THE BIDDING DOCUMENTS (DRAWINGS AND SPECIFICATIONS) AND SUBSEQUENTLY ISSUED ADDENDA HAVE BEEN MERGED INTO ONE CONFORMING SET OF DOCUMENTS FOR THE CONVENIENCE OF THE CONTRACTOR. IF INCONSISTENCIES OR AMBIGUITIES BETWEEN "CONFORMED" DOCUMENTS AND CONTRACT DOCUMENTS ARE FOUND, THE CONTRACT DOCUMENTS SHALL GOVERN.

REV	DATE	BY	DESCRIPTION
			CONFORMED DOCUMENTS

DESIGNED NL/CW
DRAWN AW
CHECKED SGE
DATE MAY 2022

ORIGINAL SEALED BY CASEY G. WAUTERS, P.E. 5/9/2022 TX PE 93889

AECOM TECHNICAL SERVICES INC.
13640 BRIARWICK DRIVE, SUITE 200
AUSTIN, TEXAS 78729
WWW.AECOM.COM
TBPE REG. NO. F-3580

TBPE No. F-882

CITY OF AUSTIN

CITY OF AUSTIN
WILD HORSE RANCH WWTP EXPANSION
CIVIL
YARD PIPING PROFILES
SHEET 11 OF 19

VERIFY SCALES
BAR IS ONE INCH ON ORIGINAL DRAWING
0 1"
IF NOT ONE INCH ON THIS SHEET, ADJUST SCALES ACCORDINGLY

JOB NO. 10976A.10
DRAWING NO. 02C30
SHEET NO. 264 OF 464

LAST SAVED BY: dseivert

PROJECT NO. 9585A10 FILE NAME: 9585A10_SheetSeed.dgn

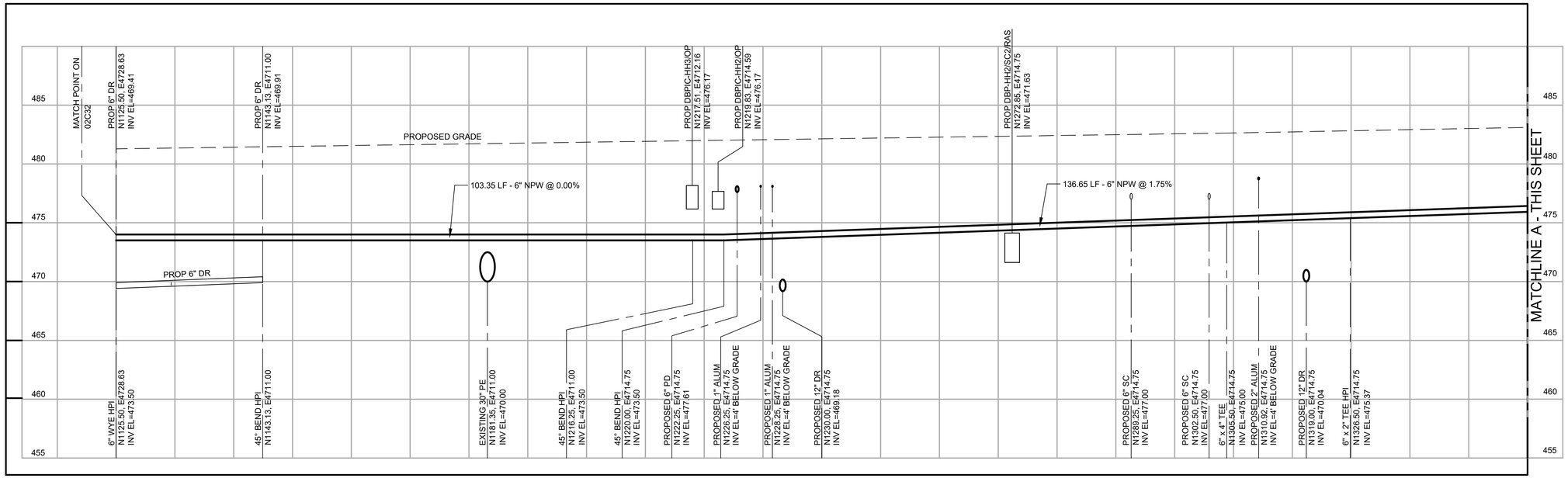

28 02C01-02

6" NPW

SCALE: 1"=10' HORIZ, 1"= 5' VERTICAL
FILE:

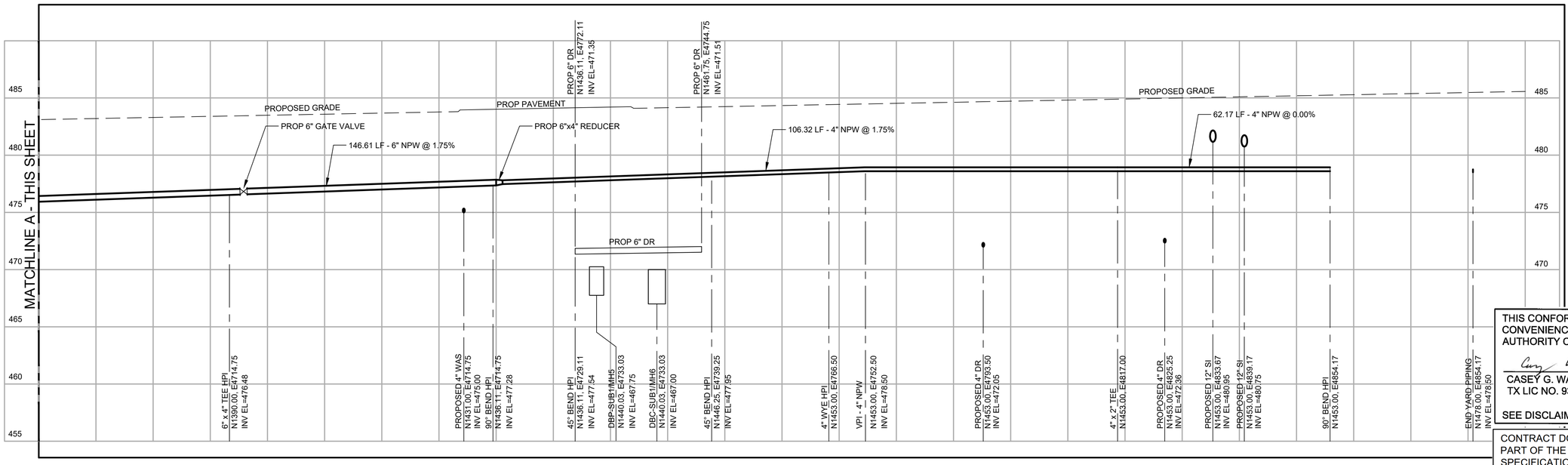

28 02C02

6" NPW, 4" NPW & 2" NPW

SCALE: 1"=10' HORIZ, 1"= 5' VERTICAL
FILE:

NOTES:

1. PROPOSED PIPING ON THIS DRAWING IS SHOWING THE FINAL LAYOUT. REFERENCE SHEETS 02-D01TO 02D05 FOR EXISTING PIPING DEMOLITION AND CONSTRUCTION PHASING.
2. CONNECT TO EXISTING INFRASTRUCTURE WITH 90 DEGREE BEND.
3. EXISTING YARD PIPING INFORMATION SHOWN ON THIS DRAWING IS FROM RECORD DRAWINGS. ACTUAL FIELD CONDITIONS MAY BE DIFFERENT FROM THOSE SHOWN IN THIS DRAWING. CONTRACTOR TO FIELD VERIFY INSTALLED CONDITIONS IMPACTING OR IMPACTED BY THIS WORK PRIOR TO INITIATING WORK.

THIS CONFORMED DOCUMENT IS RELEASED FOR THE CONVENIENCE OF THE CONTRACTOR UNDER THE AUTHORITY OF:

CASEY G. WAUTERS, P.E.
TX LIC NO. 93889

11-01-22
DATE

SEE DISCLAIMER FOR LIMITATIONS OF USE.

CONTRACT DOCUMENTS DATED JUNE 10, 2022, AS PART OF THE BIDDING DOCUMENTS (DRAWINGS AND SPECIFICATIONS) AND SUBSEQUENTLY ISSUED ADDENDA HAVE BEEN MERGED INTO ONE CONFORMING SET OF DOCUMENTS FOR THE CONVENIENCE OF THE CONTRACTOR. IF INCONSISTENCIES OR AMBIGUITIES BETWEEN "CONFORMED" DOCUMENTS AND CONTRACT DOCUMENTS ARE FOUND, THE CONTRACT DOCUMENTS SHALL GOVERN.

REV	DATE	BY	DESCRIPTION
			CONFORMED DOCUMENTS

DESIGNED NL/CW
DRAWN AW
CHECKED SGE
DATE FEBRUARY 2022

** ORIGINAL SEALED BY CASEY G. WAUTERS, P.E. 2/28/2022 TX PE 93889 **

AECOM TECHNICAL SERVICES INC.
13640 BRIARWICK DRIVE, SUITE 200
AUSTIN, TEXAS 78729
WWW.AECOM.COM
TBPE REG. NO. F-3580

TBPE No. F-882

CITY OF AUSTIN

CITY OF AUSTIN
WILD HORSE RANCH WWTP EXPANSION
CIVIL
YARD PIPING PROFILES
SHEET 12 OF 19

VERIFY SCALES
BAR IS ONE INCH ON ORIGINAL DRAWING
0 1"
IF NOT ONE INCH ON THIS SHEET, ADJUST SCALES ACCORDINGLY

JOB NO. 10976A.10
DRAWING NO. 02C31
SHEET NO. 265 OF 464

LAST SAVED BY: dseivert

PROJECT NO. 9585A10 FILE NAME: 9585A10_SheetSeed.dgn

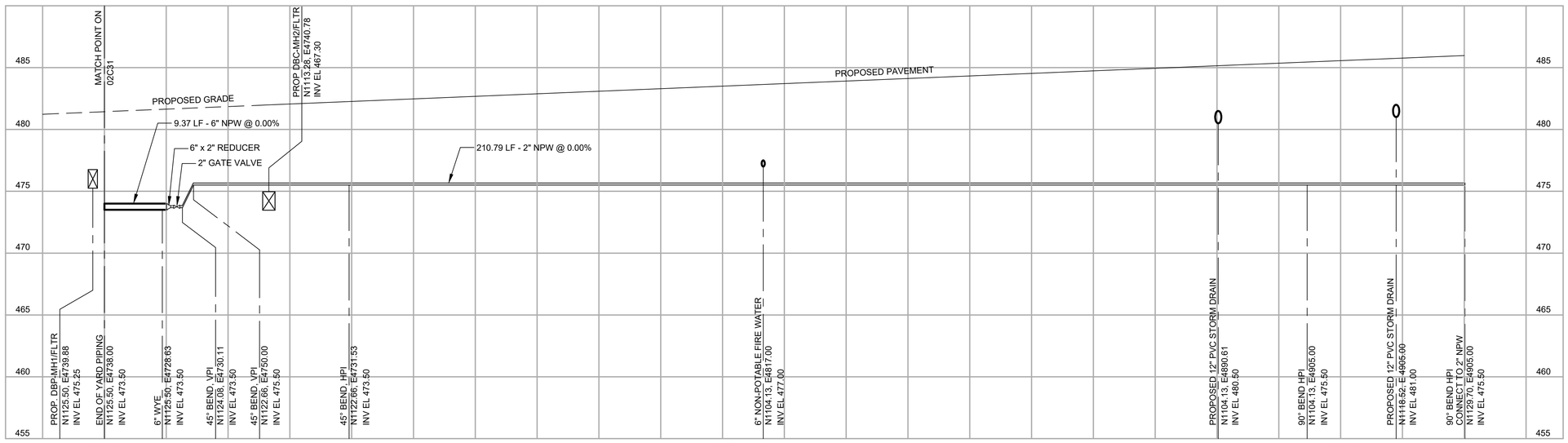

29 02C01 **6" NPW AND 2" NPW**

SCALE: 1"=10' HORIZ, 1"= 5' VERTICAL
FILE:

NOTES:

1. PROPOSED PIPING ON THIS DRAWING IS SHOWING THE FINAL LAYOUT. REFERENCE SHEETS 02D01 TO 02D05 FOR EXISTING PIPING DEMOLITION ABANDONMENT, AND CONSTRUCTION PHASING.
2. EXISTING YARD PIPING INFORMATION SHOWN ON THIS DRAWING IS FROM RECORD DRAWINGS. ACTUAL FIELD CONDITIONS MAY BE DIFFERENT FROM THOSE SHOWN IN THIS DRAWING. CONTRACTOR TO FIELD VERIFY INSTALLED CONDITIONS IMPACTING OR IMPACTED BY THIS WORK PRIOR TO INITIATING WORK.

THIS CONFORMED DOCUMENT IS RELEASED FOR THE CONVENIENCE OF THE CONTRACTOR UNDER THE AUTHORITY OF:

CASEY G. WAUTERS, P.E. 11-01-22
TX LIC NO. 93889 DATE

SEE DISCLAIMER FOR LIMITATIONS OF USE.

CONTRACT DOCUMENTS DATED JUNE 10, 2022, AS PART OF THE BIDDING DOCUMENTS (DRAWINGS AND SPECIFICATIONS) AND SUBSEQUENTLY ISSUED ADDENDA HAVE BEEN MERGED INTO ONE CONFORMING SET OF DOCUMENTS FOR THE CONVENIENCE OF THE CONTRACTOR. IF INCONSISTENCIES OR AMBIGUITIES BETWEEN "CONFORMED" DOCUMENTS AND CONTRACT DOCUMENTS ARE FOUND, THE CONTRACT DOCUMENTS SHALL GOVERN.

REV	DATE	BY	DESCRIPTION
			CONFORMED DOCUMENTS

DESIGNED NL/CW
DRAWN AW
CHECKED SGE
DATE MAY 2022

** ORIGINAL SEALED BY CASEY G. WAUTERS, P.E. 5/9/2022 TX PE 93889 **

AECOM TECHNICAL SERVICES INC.
13640 BRIARWICK DRIVE, SUITE 200
AUSTIN, TEXAS 78729
WWW.AECOM.COM
TBPE REG. NO. F-3580

TBPE No. F-882

CITY OF AUSTIN

CITY OF AUSTIN
WILD HORSE RANCH WWTP EXPANSION
CIVIL
YARD PIPING PROFILES
SHEET 13 OF 19

VERIFY SCALES
BAR IS ONE INCH ON ORIGINAL DRAWING
0 1"
IF NOT ONE INCH ON THIS SHEET, ADJUST SCALES ACCORDINGLY

JOB NO. 10976A.10
DRAWING NO. 02C32
SHEET NO. 266 OF 464

LAST SAVED BY: dseivert

PROJECT NO. 9585A10 FILE NAME: 9585A10_SheetSeed.dgn

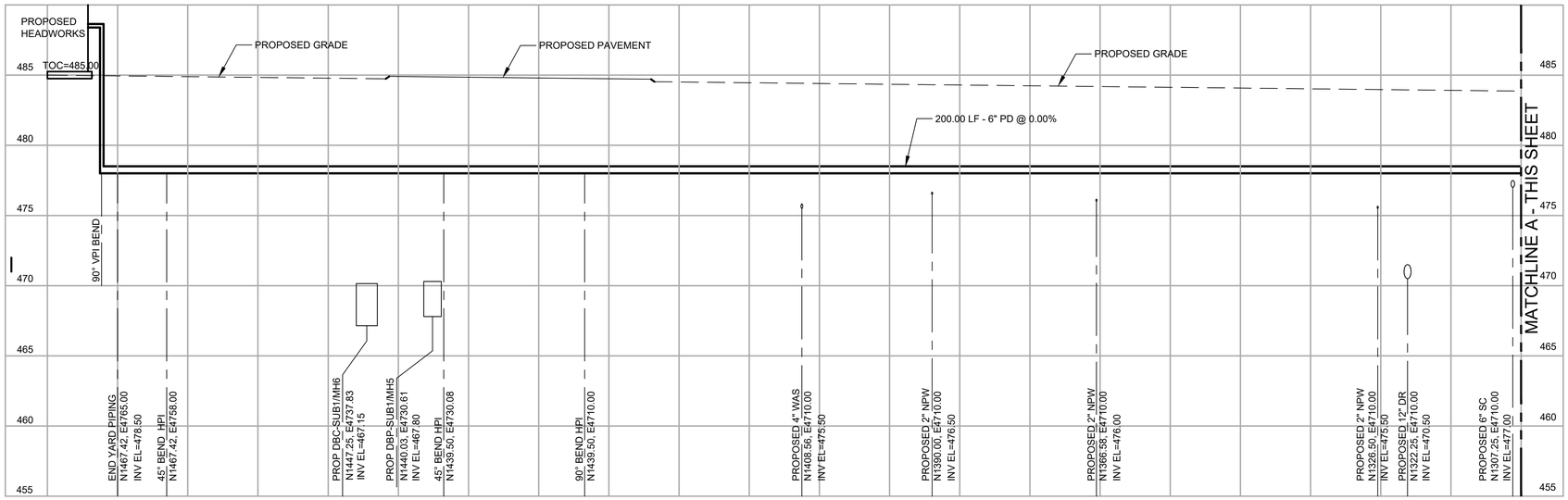

30 02C02 **6" PD**

SCALE: 1"=10' HORIZ, 1"= 5' VERTICAL
FILE:

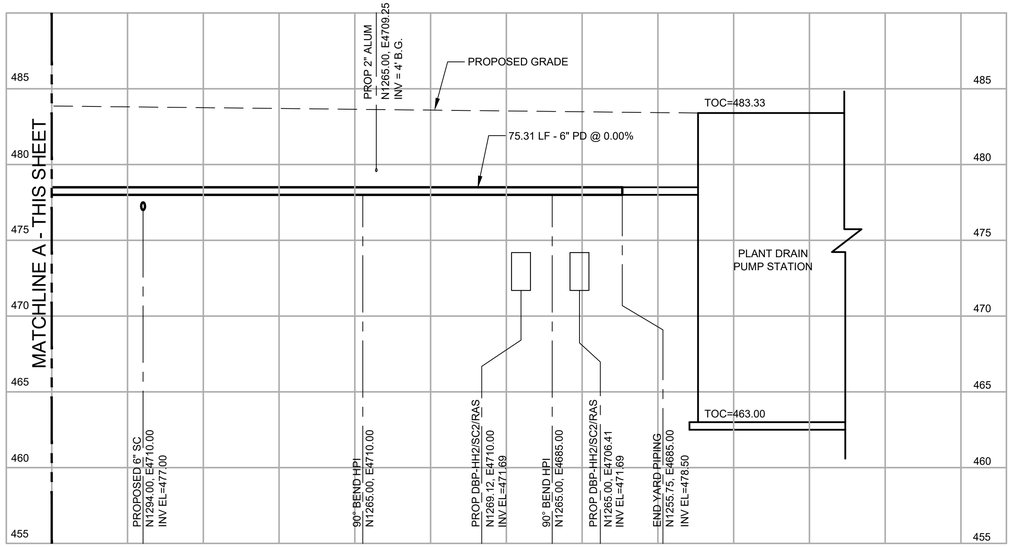

30 02C02 **6" PD**

SCALE: 1"=10' HORIZ, 1"= 5' VERTICAL
FILE:

NOTES:

1. PROPOSED PIPING ON THIS DRAWING IS SHOWING THE FINAL LAYOUT. REFERENCE SHEETS 02D01 TO 02D05 FOR EXISTING PIPING DEMOLITION ABANDONMENT, AND CONSTRUCTION PHASING.
2. EXISTING YARD PIPING INFORMATION SHOWN ON THIS DRAWING IS FROM RECORD DRAWINGS. ACTUAL FIELD CONDITIONS MAY BE DIFFERENT FROM THOSE SHOWN IN THIS DRAWING. CONTRACTOR TO FIELD VERIFY INSTALLED CONDITIONS IMPACTING OR IMPACTED BY THIS WORK PRIOR TO INITIATING WORK.

THIS CONFORMED DOCUMENT IS RELEASED FOR THE CONVENIENCE OF THE CONTRACTOR UNDER THE AUTHORITY OF:

CASEY G. WAUTERS, P.E. — 11-01-22
TX LIC NO. 93889 — DATE

SEE DISCLAIMER FOR LIMITATIONS OF USE.

CONTRACT DOCUMENTS DATED JUNE 10, 2022, AS PART OF THE BIDDING DOCUMENTS (DRAWINGS AND SPECIFICATIONS) AND SUBSEQUENTLY ISSUED ADDENDA HAVE BEEN MERGED INTO ONE CONFORMING SET OF DOCUMENTS FOR THE CONVENIENCE OF THE CONTRACTOR. IF INCONSISTENCIES OR AMBIGUITIES BETWEEN "CONFORMED" DOCUMENTS AND CONTRACT DOCUMENTS ARE FOUND, THE CONTRACT DOCUMENTS SHALL GOVERN.

REV	DATE	BY	DESCRIPTION
			CONFORMED DOCUMENTS

DESIGNED NL/CW
DRAWN AW
CHECKED SGE
DATE FEBRUARY 2022

**
ORIGINAL
SEALED BY
CASEY G. WAUTERS, P.E.
2/28/2022
TX PE 93889
**

AECOM TECHNICAL SERVICES INC.
13640 BRIARWICK DRIVE, SUITE 200
AUSTIN, TEXAS 78729
WWW.AECOM.COM
TBPE REG. NO. F-3580

TBPE No. F-882

CITY OF AUSTIN

CITY OF AUSTIN
WILD HORSE RANCH WWTP EXPANSION
CIVIL
YARD PIPING PROFILES
SHEET 14 OF 19

VERIFY SCALES
BAR IS ONE INCH ON ORIGINAL DRAWING
0 — 1"
IF NOT ONE INCH ON THIS SHEET, ADJUST SCALES ACCORDINGLY

JOB NO. 10976A.10
DRAWING NO. 02C33
SHEET NO. 267 OF 464

LAST SAVED BY: dseivert

PROJECT NO. 9585A10 FILE NAME: 9585A10_SheetSeed.dgn

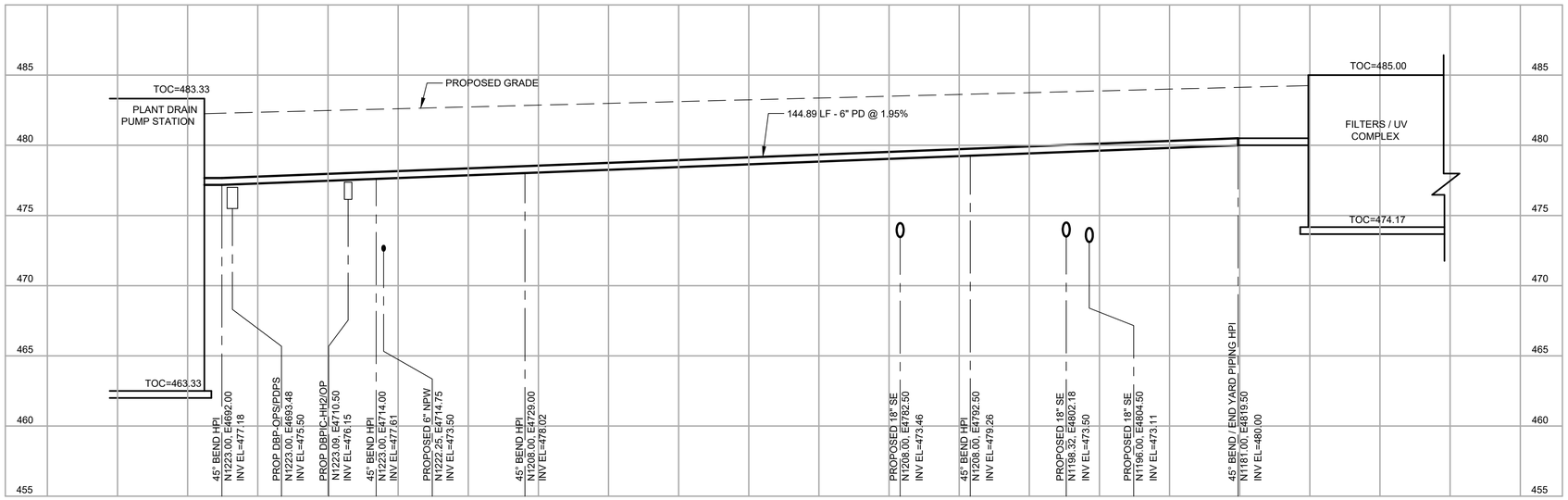

31 02C02 **6" PD**

SCALE: 1"=10' HORIZ, 1"= 5' VERTICAL
FILE:

NOTES:

1. PROPOSED PIPING ON THIS DRAWING IS SHOWING THE FINAL LAYOUT. REFERENCE SHEETS 02D01 TO 02D05 FOR EXISTING PIPING DEMOLITION ABANDONMENT, AND CONSTRUCTION PHASING.
2. EXISTING YARD PIPING INFORMATION SHOWN ON THIS DRAWING IS FROM RECORD DRAWINGS. ACTUAL FIELD CONDITIONS MAY BE DIFFERENT FROM THOSE SHOWN IN THIS DRAWING. CONTRACTOR TO FIELD VERIFY INSTALLED CONDITIONS IMPACTING OR IMPACTED BY THIS WORK PRIOR TO INITIATING WORK.

THIS CONFORMED DOCUMENT IS RELEASED FOR THE CONVENIENCE OF THE CONTRACTOR UNDER THE AUTHORITY OF:

CASEY G. WAUTERS, P.E. — 11-01-22
TX LIC NO. 93889 — DATE

SEE DISCLAIMER FOR LIMITATIONS OF USE.

CONTRACT DOCUMENTS DATED JUNE 10, 2022, AS PART OF THE BIDDING DOCUMENTS (DRAWINGS AND SPECIFICATIONS) AND SUBSEQUENTLY ISSUED ADDENDA HAVE BEEN MERGED INTO ONE CONFORMING SET OF DOCUMENTS FOR THE CONVENIENCE OF THE CONTRACTOR. IF INCONSISTENCIES OR AMBIGUITIES BETWEEN "CONFORMED" DOCUMENTS AND CONTRACT DOCUMENTS ARE FOUND, THE CONTRACT DOCUMENTS SHALL GOVERN.

REV	DATE	BY	DESCRIPTION
			CONFORMED DOCUMENTS

DESIGNED NL/CW
DRAWN AW
CHECKED SGE
DATE FEBRUARY 2022

**
ORIGINAL
SEALED BY
CASEY G. WAUTERS, P.E.
2/28/2022
TX PE 93889
**

AECOM TECHNICAL SERVICES INC.
13640 BRIARWICK DRIVE, SUITE 200
AUSTIN, TEXAS 78729
WWW.AECOM.COM
TBPE REG. NO. F-3580

TBPE No. F-882

CITY OF AUSTIN

CITY OF AUSTIN
WILD HORSE RANCH WWTP EXPANSION
CIVIL
YARD PIPING PROFILES
SHEET 15 OF 19

VERIFY SCALES
BAR IS ONE INCH ON ORIGINAL DRAWING
0 — 1"
IF NOT ONE INCH ON THIS SHEET, ADJUST SCALES ACCORDINGLY

JOB NO. 10976A.10
DRAWING NO. 02C34
SHEET NO. 268 OF 464

LAST SAVED BY: dseivert

PROJECT NO. 9585A10 FILE NAME: 9585A10_SheetSeed.dgn

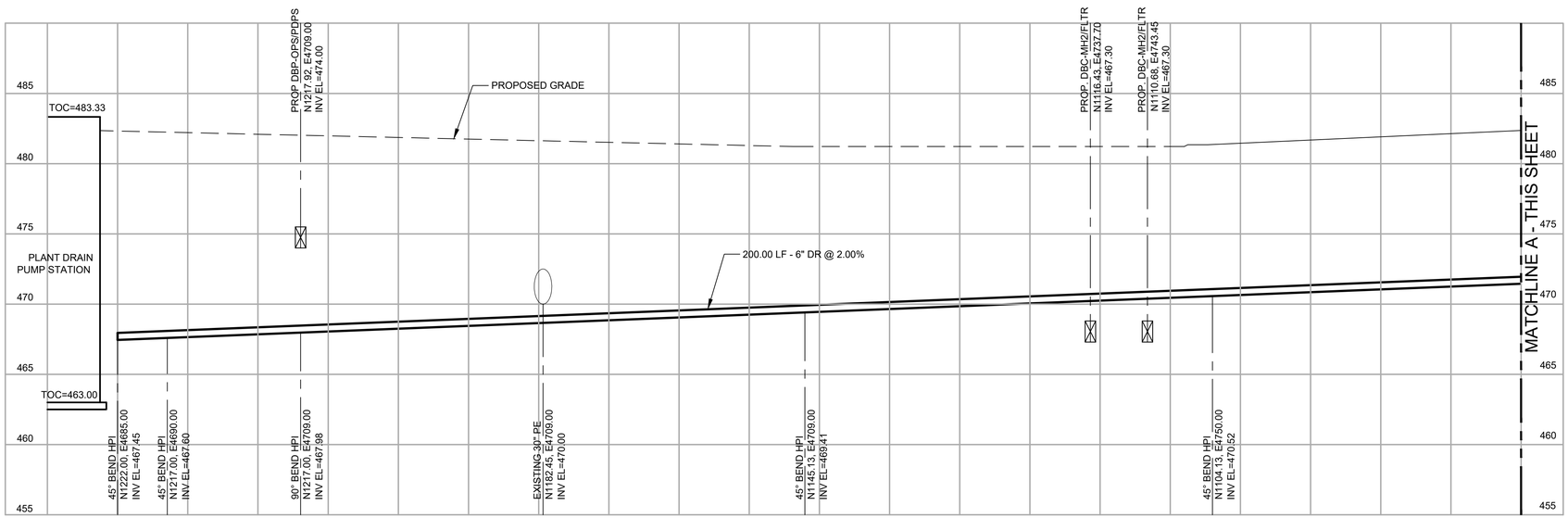

32 02C02 **6" DR**

SCALE: 1"=10' HORIZ, 1"= 5' VERTICAL
FILE:

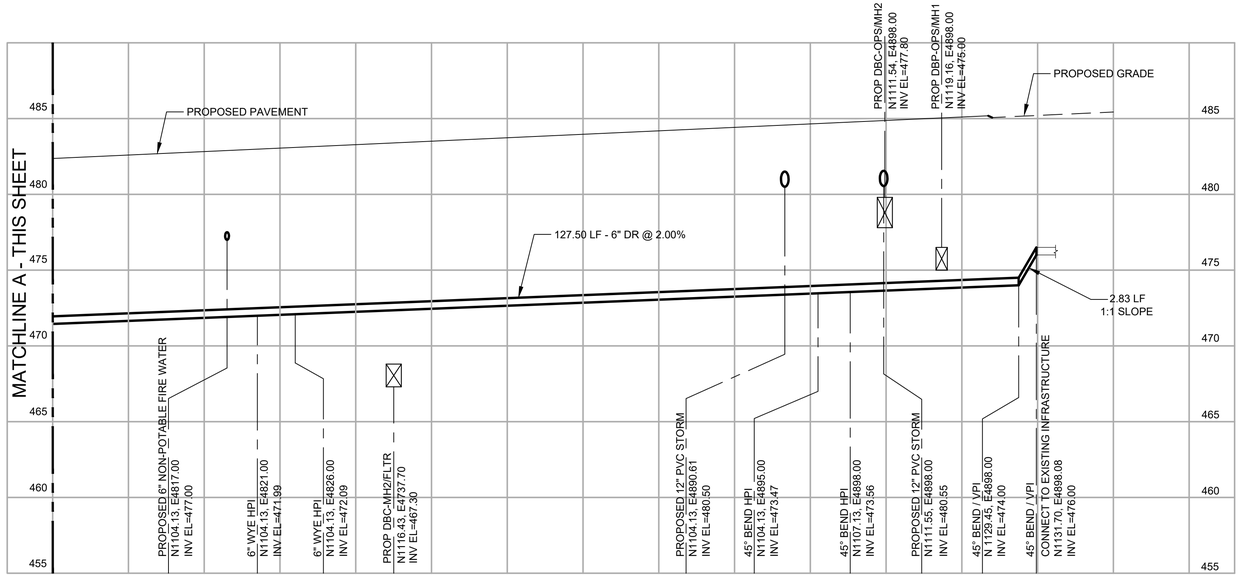

32 02C02 **6" DR**

SCALE: 1"=10' HORIZ, 1"= 5' VERTICAL
FILE:

NOTES:

1. PROPOSED PIPING ON THIS DRAWING IS SHOWING THE FINAL LAYOUT. REFERENCE SHEETS 02D01 TO 02D05 FOR EXISTING PIPING DEMOLITION ABANDONMENT, AND CONSTRUCTION PHASING.
2. EXISTING YARD PIPING INFORMATION SHOWN ON THIS DRAWING IS FROM RECORD DRAWINGS. ACTUAL FIELD CONDITIONS MAY BE DIFFERENT FROM THOSE SHOWN IN THIS DRAWING. CONTRACTOR TO FIELD VERIFY INSTALLED CONDITIONS IMPACTING OR IMPACTED BY THIS WORK PRIOR TO INITIATING WORK.

THIS CONFORMED DOCUMENT IS RELEASED FOR THE CONVENIENCE OF THE CONTRACTOR UNDER THE AUTHORITY OF:

CASEY G. WAUTERS, P.E. 11-01-22
TX LIC NO. 93889 DATE

SEE DISCLAIMER FOR LIMITATIONS OF USE.

CONTRACT DOCUMENTS DATED JUNE 10, 2022, AS PART OF THE BIDDING DOCUMENTS (DRAWINGS AND SPECIFICATIONS) AND SUBSEQUENTLY ISSUED ADDENDA HAVE BEEN MERGED INTO ONE CONFORMING SET OF DOCUMENTS FOR THE CONVENIENCE OF THE CONTRACTOR. IF INCONSISTENCIES OR AMBIGUITIES BETWEEN "CONFORMED" DOCUMENTS AND CONTRACT DOCUMENTS ARE FOUND, THE CONTRACT DOCUMENTS SHALL GOVERN.

REV	DATE	BY	DESCRIPTION
			CONFORMED DOCUMENTS

DESIGNED NL/CW
DRAWN AW
CHECKED SGE
DATE MAY 2022

ORIGINAL
SEALED BY
CASEY G. WAUTERS, P.E.
5/9/2022
TX PE 93889

AECOM TECHNICAL SERVICES INC.
13640 BRIARWICK DRIVE, SUITE 200
AUSTIN, TEXAS 78729
WWW.AECOM.COM
TBPE REG. NO. F-3580

carollo
TBPE No. F-882

CITY OF AUSTIN

CITY OF AUSTIN
WILD HORSE RANCH WWTP EXPANSION
CIVIL
YARD PIPING PROFILES
SHEET 16 OF 19

VERIFY SCALES
BAR IS ONE INCH ON ORIGINAL DRAWING
0 1"
IF NOT ONE INCH ON THIS SHEET, ADJUST SCALES ACCORDINGLY

JOB NO. 10976A.10
DRAWING NO. 02C35
SHEET NO. 269 OF 464

LAST SAVED BY: dseivert

PROJECT NO. 9585A10 FILE NAME: 9585A10_SheetSeed.dgn

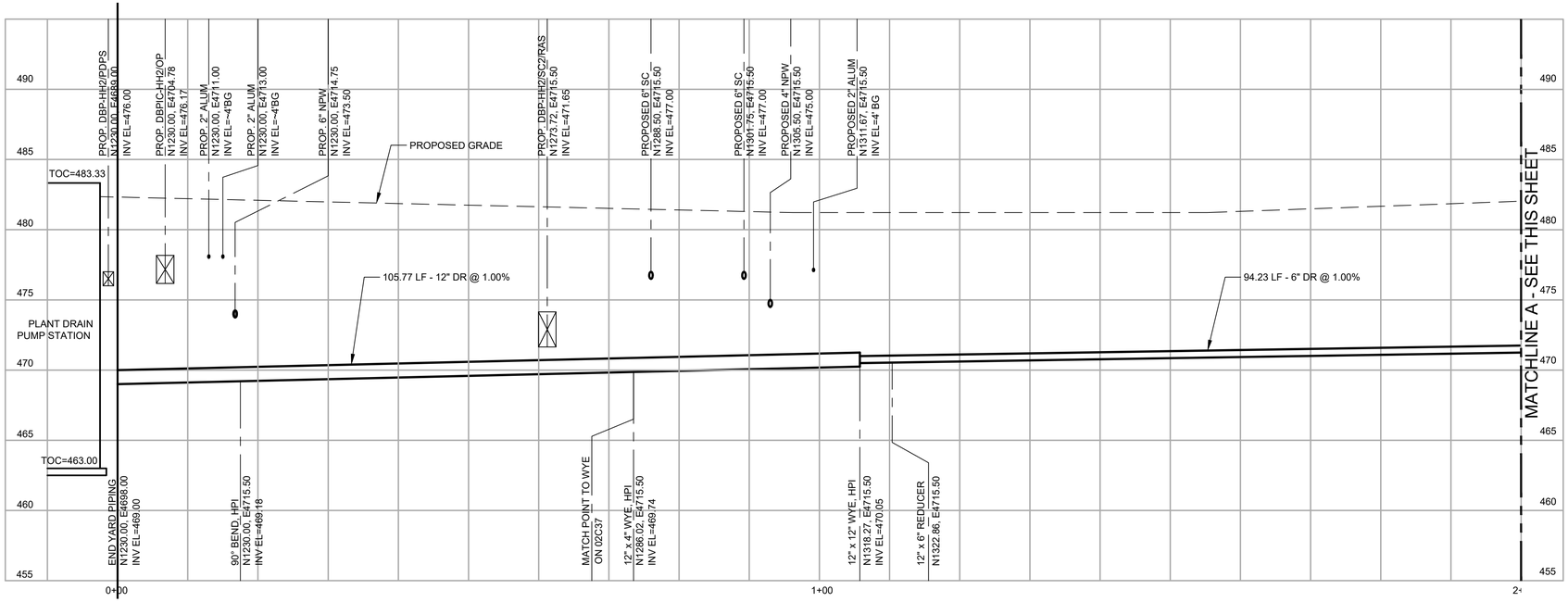

33 02C02 **12" DR**

SCALE: 1"=10' HORIZ, 1"= 5' VERTICAL

FILE:

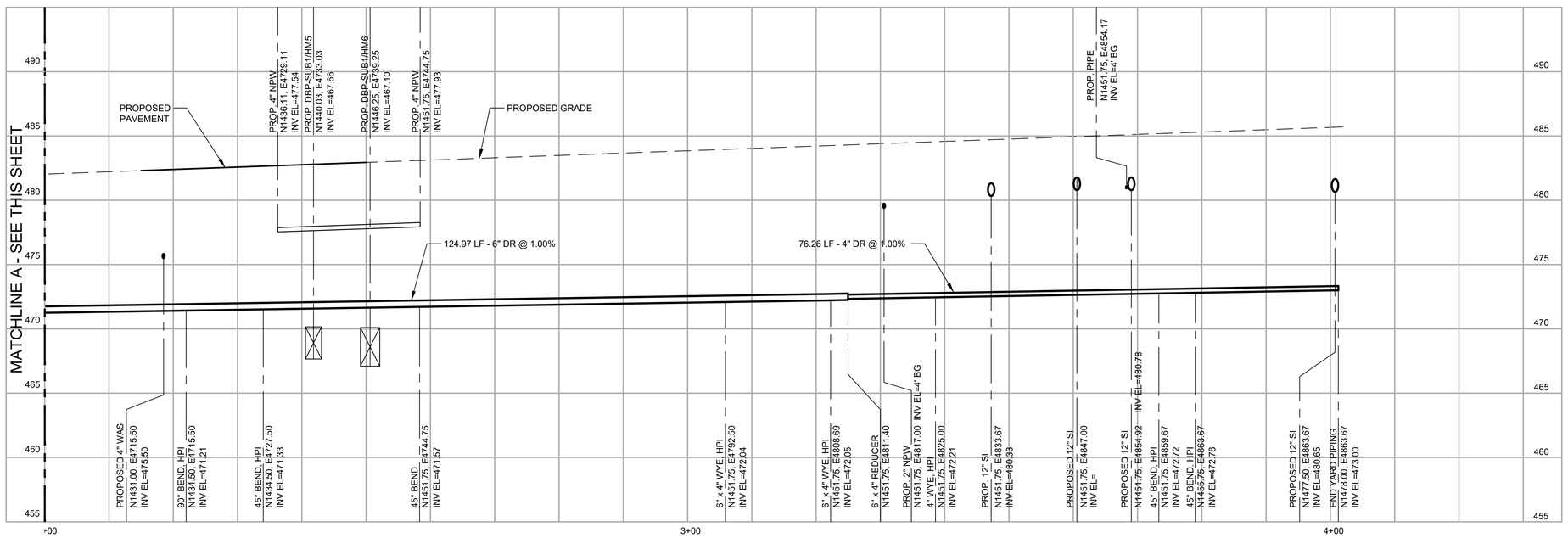

NOTES:

1. PROPOSED PIPING ON THIS DRAWING IS SHOWING THE FINAL LAYOUT. REFERENCE SHEETS 02D01 TO 02D05 FOR EXISTING PIPING DEMOLITION ABANDONMENT, AND CONSTRUCTION PHASING.
2. EXISTING YARD PIPING INFORMATION SHOWN ON THIS DRAWING IS FROM RECORD DRAWINGS. ACTUAL FIELD CONDITIONS MAY BE DIFFERENT FROM THOSE SHOWN IN THIS DRAWING. CONTRACTOR TO FIELD VERIFY INSTALLED CONDITIONS IMPACTING OR IMPACTED BY THIS WORK PRIOR TO INITIATING WORK.

THIS CONFORMED DOCUMENT IS RELEASED FOR THE CONVENIENCE OF THE CONTRACTOR UNDER THE AUTHORITY OF:

CASEY G. WAUTERS, P.E. 11-01-22
TX LIC NO. 93889 DATE

SEE DISCLAIMER FOR LIMITATIONS OF USE.

CONTRACT DOCUMENTS DATED JUNE 10, 2022, AS PART OF THE BIDDING DOCUMENTS (DRAWINGS AND SPECIFICATIONS) AND SUBSEQUENTLY ISSUED ADDENDA HAVE BEEN MERGED INTO ONE CONFORMING SET OF DOCUMENTS FOR THE CONVENIENCE OF THE CONTRACTOR. IF INCONSISTENCIES OR AMBIGUITIES BETWEEN "CONFORMED" DOCUMENTS AND CONTRACT DOCUMENTS ARE FOUND, THE CONTRACT DOCUMENTS SHALL GOVERN.

REV	DATE	BY	DESCRIPTION
			CONFORMED DOCUMENTS

DESIGNED NL/CW
DRAWN AW
CHECKED SGE
DATE FEBRUARY 2022

** ORIGINAL SEALED BY CASEY G. WAUTERS, P.E. 2/28/2022 TX PE 93889 **

AECOM TECHNICAL SERVICES INC.
13640 BRIARWICK DRIVE, SUITE 200
AUSTIN, TEXAS 78729
WWW.AECOM.COM
TBPE REG. NO. F-3580

TBPE No. F-882

CITY OF AUSTIN

CITY OF AUSTIN
WILD HORSE RANCH WWTP EXPANSION
CIVIL
YARD PIPING PROFILES
SHEET 17 OF 19

VERIFY SCALES
BAR IS ONE INCH ON ORIGINAL DRAWING
0 1"
IF NOT ONE INCH ON THIS SHEET, ADJUST SCALES ACCORDINGLY

JOB NO. 10976A.10
DRAWING NO. 02C36
SHEET NO. 270 OF 464

LAST SAVED BY: dsevert

PROJECT NO. 9585A10 FILE NAME: 9585A10_SheetSeed.dgn

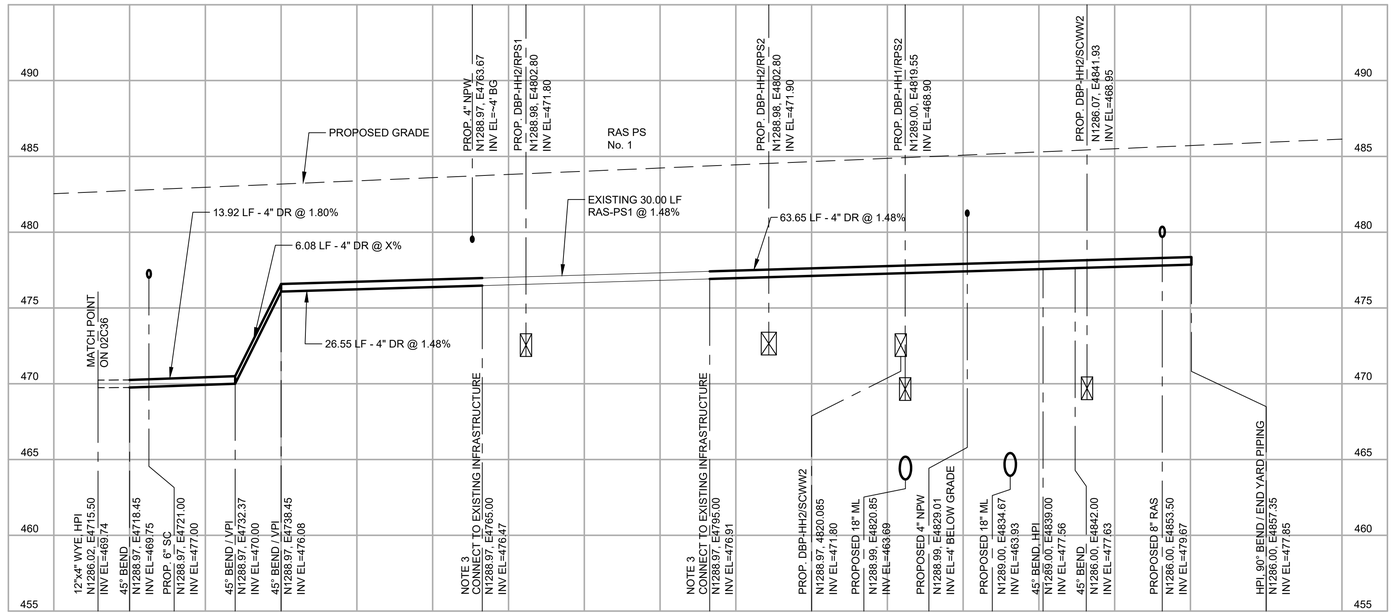

34 / - **4" DR**

SCALE: 1"=10' HORIZ, 1"= 5' VERTICAL
FILE:

NOTES:

1. PROPOSED PIPING ON THIS DRAWING IS SHOWING THE FINAL LAYOUT. REFERENCE SHEETS 02D01 TO 02D05 FOR EXISTING PIPING DEMOLITION ABANDONMENT, AND CONSTRUCTION PHASING.
2. EXISTING YARD PIPING INFORMATION SHOWN ON THIS DRAWING IS FROM RECORD DRAWINGS. ACTUAL FIELD CONDITIONS MAY BE DIFFERENT FROM THOSE SHOWN IN THIS DRAWING. CONTRACTOR TO FIELD VERIFY INSTALLED CONDITIONS IMPACTING OR IMPACTED BY THIS WORK PRIOR TO INITIATING WORK.
3. MAINTAIN POSITIVE DRAINAGE WHILE CONNECTING TO EXISTING 4" DR.

THIS CONFORMED DOCUMENT IS RELEASED FOR THE CONVENIENCE OF THE CONTRACTOR UNDER THE AUTHORITY OF:

CASEY G. WAUTERS, P.E. — 11-01-22 DATE
TX LIC NO. 93889

SEE DISCLAIMER FOR LIMITATIONS OF USE.

CONTRACT DOCUMENTS DATED JUNE 10, 2022, AS PART OF THE BIDDING DOCUMENTS (DRAWINGS AND SPECIFICATIONS) AND SUBSEQUENTLY ISSUED ADDENDA HAVE BEEN MERGED INTO ONE CONFORMING SET OF DOCUMENTS FOR THE CONVENIENCE OF THE CONTRACTOR. IF INCONSISTENCIES OR AMBIGUITIES BETWEEN "CONFORMED" DOCUMENTS AND CONTRACT DOCUMENTS ARE FOUND, THE CONTRACT DOCUMENTS SHALL GOVERN.

REV	DATE	BY	DESCRIPTION
			CONFORMED DOCUMENTS

DESIGNED NL/CW
DRAWN AW
CHECKED SGE
DATE FEBRUARY 2022

**
ORIGINAL
SEALED BY
CASEY G. WAUTERS, P.E.
2/28/2022
TX PE 93889
**

AECOM TECHNICAL SERVICES INC.
13640 BRIARWICK DRIVE, SUITE 200
AUSTIN, TEXAS 78729
WWW.AECOM.COM
TBPE REG. NO. F-3580

TBPE No. F-882

CITY OF AUSTIN

CITY OF AUSTIN
WILD HORSE RANCH WWTP EXPANSION
CIVIL
YARD PIPING PROFILES
SHEET 18 OF 19

VERIFY SCALES
BAR IS ONE INCH ON ORIGINAL DRAWING
0 — 1"
IF NOT ONE INCH ON THIS SHEET, ADJUST SCALES ACCORDINGLY

JOB NO. 10976A.10
DRAWING NO. 02C37
SHEET NO. 271 OF 464

LAST SAVED BY: dseivert

PROJECT NO. 9585A10 FILE NAME: 9585A10_SheetSeed.dgn

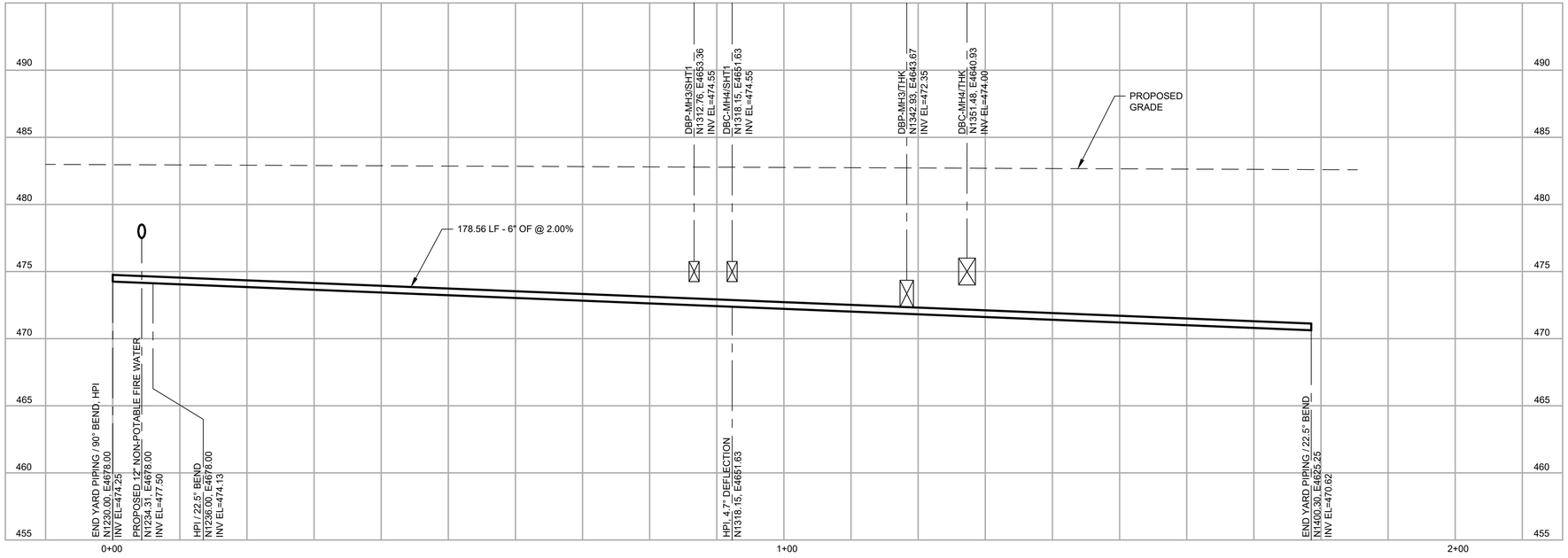

35 / - **6" OF**

SCALE: 1"=10' HORIZ, 1"= 5' VERTICAL
FILE:

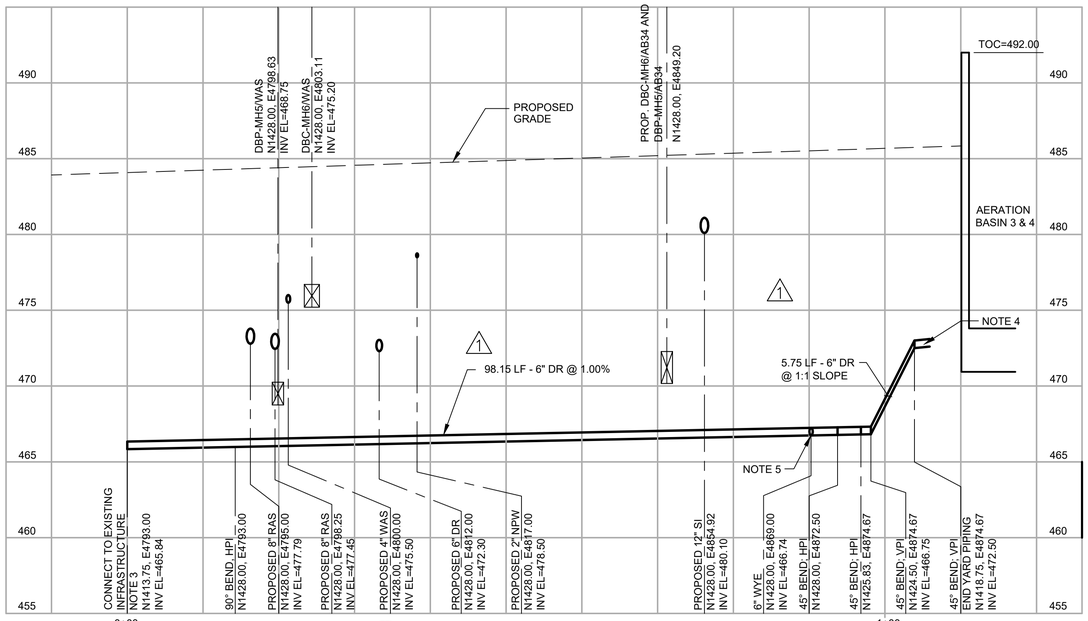

36 / - **6" DR**

SCALE: 1"=10' HORIZ, 1"= 5' VERTICAL
FILE:

NOTES:

1. PROPOSED PIPING ON THIS DRAWING IS SHOWING THE FINAL LAYOUT. REFERENCE SHEETS 02D01 TO 02D05 FOR EXISTING PIPING DEMOLITION ABANDONMENT, AND CONSTRUCTION PHASING.
2. EXISTING YARD PIPING INFORMATION SHOWN ON THIS DRAWING IS FROM RECORD DRAWINGS. ACTUAL FIELD CONDITIONS MAY BE DIFFERENT FROM THOSE SHOWN IN THIS DRAWING. CONTRACTOR TO FIELD VERIFY INSTALLED CONDITIONS IMPACTING OR IMPACTED BY THIS WORK PRIOR TO INITIATING WORK.
3. CONTRACTOR TO LOCATE EXISTING 6" DR PIPE IN FIELD. REFERENCE RECORD DRAWINGS FOR LOCATION.
4. REFERENCE MECHANICAL DRAWING FOR AERATION BASIN 3 & 4 FOR CONNECTION TO STRUCTURE.
5. 6" DR LINE TO AERATION BASIN 3 THROUGH BRANCH OF WYE TO HAVE SAME SET OF VERTICAL BENDS AS DEPICTED IN THIS PROFILE TO CONNECT TO 6" DRAIN PIPE AT INVERT ELEVATION OF 472.50' AS SHOWN ON MECHANICAL DRAWING FOR AERATION BASINS 3 & 4.

THIS CONFORMED DOCUMENT IS RELEASED FOR THE CONVENIENCE OF THE CONTRACTOR UNDER THE AUTHORITY OF:

CASEY G. WAUTERS, P.E. — 11-01-22
TX LIC NO. 93889 — DATE

SEE DISCLAIMER FOR LIMITATIONS OF USE.

CONTRACT DOCUMENTS DATED JUNE 10, 2022, AS PART OF THE BIDDING DOCUMENTS (DRAWINGS AND SPECIFICATIONS) AND SUBSEQUENTLY ISSUED ADDENDA HAVE BEEN MERGED INTO ONE CONFORMING SET OF DOCUMENTS FOR THE CONVENIENCE OF THE CONTRACTOR. IF INCONSISTENCIES OR AMBIGUITIES BETWEEN "CONFORMED" DOCUMENTS AND CONTRACT DOCUMENTS ARE FOUND, THE CONTRACT DOCUMENTS SHALL GOVERN.

REV	DATE	BY	DESCRIPTION
1	09/07/22	CW	ADDENDUM No. 5

CONFORMED DOCUMENTS

DESIGNED NL/CW
DRAWN AW
CHECKED SGE
DATE SEPTEMBER 2022

** ORIGINAL SEALED BY CASEY G. WAUTERS, P.E. 9/7/2022 TX PE 93889 **

AECOM TECHNICAL SERVICES INC.
13640 BRIARWICK DRIVE, SUITE 200
AUSTIN, TEXAS 78729
WWW.AECOM.COM
TBPE REG. NO. F-3580

carollo
TBPE No. F-882

CITY OF AUSTIN
FOUNDED 1839

CITY OF AUSTIN

CITY OF AUSTIN
WILD HORSE RANCH WWTP EXPANSION
CIVIL
YARD PIPING PROFILES
SHEET 19 OF 19

VERIFY SCALES
BAR IS ONE INCH ON ORIGINAL DRAWING
0 — 1"
IF NOT ONE INCH ON THIS SHEET, ADJUST SCALES ACCORDINGLY

JOB NO. 10976A.10
DRAWING NO. 02C38
SHEET NO. 272 OF 464

LAST SAVED BY: dseivert

PROJECT NO. 9585A10 FILE NAME: 9585A10_SheetSeed.dgn

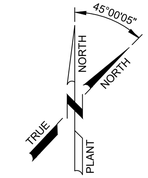

SCALE: 1" = 20'

LEGEND

- EXISTING
- PROPOSED
- 100YR — 100 YEAR FLOODPLAIN
- 500YR — 500 YEAR FLOODPLAIN
- LOC — LOC — LIMITS OF CONSTRUCTION
- X / XX — PROFILE NUMBER / DRAWING NUMBER PROFILE IS ON

NOTES:

1. REFERENCE DRAWING 00G06 FOR OVERALL WWTP SITE PLAN.
2. REFERENCE DRAWING 00G14 FOR ALL SURVEY CONTROL POINTS AND COORDINATES.
3. EXISTING UTILITY INFORMATION, SHOWN AS BACKGROUND IN THE PLAN VIEW, WAS OBTAINED FROM AVAILABLE RECORD DRAWINGS FROM A PREVIOUS PROJECT WHICH MAY NOT BE COMPLETE OR ACCURATE. IT IS INTENDED TO PROVIDE BASIC INFORMATION ON EXISTING FACILITIES. CONTRACTOR IS RESPONSIBLE FOR FIELD VERIFYING THE LOCATION AND ELEVATION OF EXISTING UTILITIES PRIOR TO CONSTRUCTION.

THIS CONFORMED DOCUMENT IS RELEASED FOR THE CONVENIENCE OF THE CONTRACTOR UNDER THE AUTHORITY OF:

CASEY G. WAUTERS, P.E. — 11-01-22
TX LIC NO. 93889 — DATE

SEE DISCLAIMER FOR LIMITATIONS OF USE.

CONTRACT DOCUMENTS DATED JUNE 10, 2022, AS PART OF THE BIDDING DOCUMENTS (DRAWINGS AND SPECIFICATIONS) AND SUBSEQUENTLY ISSUED ADDENDA HAVE BEEN MERGED INTO ONE CONFORMING SET OF DOCUMENTS FOR THE CONVENIENCE OF THE CONTRACTOR. IF INCONSISTENCIES OR AMBIGUITIES BETWEEN "CONFORMED" DOCUMENTS AND CONTRACT DOCUMENTS ARE FOUND, THE CONTRACT DOCUMENTS SHALL GOVERN.

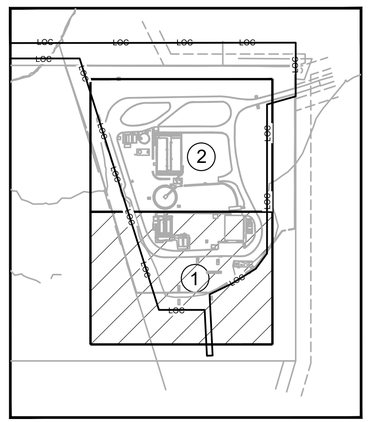

KEYMAP
NTS

REV	DATE	BY	DESCRIPTION
			CONFORMED DOCUMENTS

DESIGNED NL/CW
DRAWN AW
CHECKED SGE
DATE FEBRUARY 2022

**
ORIGINAL
SEALED BY
CASEY G. WAUTERS, P.E.
2/28/2022
TX PE 93889
**

AECOM TECHNICAL SERVICES INC.
13640 BRIARWICK DRIVE, SUITE 200
AUSTIN, TEXAS 78729
WWW.AECOM.COM
TBPE REG. NO. F-3580

TBPE No. F-882

CITY OF AUSTIN

CITY OF AUSTIN
WILD HORSE RANCH WWTP EXPANSION
CIVIL
ELECTRICAL SITE PLAN
SHEET 1 OF 2

VERIFY SCALES
BAR IS ONE INCH ON ORIGINAL DRAWING
0 — 1"
IF NOT ONE INCH ON THIS SHEET, ADJUST SCALES ACCORDINGLY

JOB NO. 10976A.10
DRAWING NO. 02C51
SHEET NO. 273 OF 464

LAST SAVED BY: dseivert

PROJECT NO. 9585A10 FILE NAME: 9585A10_SheetSeed.dgn

N1565

N1215

E4550

E5030

N1500

N1400

N1300

E4600

E4700

E4800

E4900

E5000

SCALE: 1" = 20'

LEGEND

- EXISTING
- PROPOSED
- 100YR — 100 YEAR FLOODPLAIN
- 500YR — 500 YEAR FLOODPLAIN
- LOC — LOC — LIMITS OF CONSTRUCTION
- X / XX — PROFILE NUMBER / DRAWING NUMBER PROFILE IS ON

NOTES:

1. REFERENCE DRAWING 00G06 FOR OVERALL WWTP SITE PLAN.
2. REFERENCE DRAWING 00G14 FOR ALL SURVEY CONTROL POINTS AND COORDINATES.
3. EXISTING UTILITY INFORMATION, SHOWN AS BACKGROUND IN THE PLAN VIEW, WAS OBTAINED FROM AVAILABLE RECORD DRAWINGS FROM A PREVIOUS PROJECT WHICH MAY NOT BE COMPLETE OR ACCURATE. IT IS INTENDED TO PROVIDE BASIC INFORMATION ON EXISTING FACILITIES. CONTRACTOR IS RESPONSIBLE FOR FIELD VERIFYING THE LOCATION AND ELEVATION OF EXISTING UTILITIES PRIOR TO CONSTRUCTION.

THIS CONFORMED DOCUMENT IS RELEASED FOR THE CONVENIENCE OF THE CONTRACTOR UNDER THE AUTHORITY OF:

CASEY G. WAUTERS, P.E. — 11-01-22 DATE
TX LIC NO. 93889

SEE DISCLAIMER FOR LIMITATIONS OF USE.

CONTRACT DOCUMENTS DATED JUNE 10, 2022, AS PART OF THE BIDDING DOCUMENTS (DRAWINGS AND SPECIFICATIONS) AND SUBSEQUENTLY ISSUED ADDENDA HAVE BEEN MERGED INTO ONE CONFORMING SET OF DOCUMENTS FOR THE CONVENIENCE OF THE CONTRACTOR. IF INCONSISTENCIES OR AMBIGUITIES BETWEEN "CONFORMED" DOCUMENTS AND CONTRACT DOCUMENTS ARE FOUND, THE CONTRACT DOCUMENTS SHALL GOVERN.

KEYMAP
NTS

REV	DATE	BY	DESCRIPTION
			CONFORMED DOCUMENTS

DESIGNED NL/CW · DRAWN AW · CHECKED SGE · DATE FEBRUARY 2022

ORIGINAL SEALED BY CASEY G. WAUTERS, P.E. 2/28/2022 TX PE 93889

AECOM TECHNICAL SERVICES INC.
13640 BRIARWICK DRIVE, SUITE 200
AUSTIN, TEXAS 78729
WWW.AECOM.COM
TBPE REG. NO. F-3580

TBPE No. F-882

CITY OF AUSTIN

CITY OF AUSTIN
WILD HORSE RANCH WWTP EXPANSION
CIVIL
ELECTRICAL SITE PLAN
SHEET 2 OF 2

VERIFY SCALES
BAR IS ONE INCH ON ORIGINAL DRAWING
0 — 1"
IF NOT ONE INCH ON THIS SHEET, ADJUST SCALES ACCORDINGLY

JOB NO. 10976A.10
DRAWING NO. 02C52
SHEET NO. 274 OF 464

LAST SAVED BY: dseivert

PROJECT NO. 9585A10 FILE NAME: 9585A10_SheetSeed.dgn

DUCT BANK CURVE TABLE (SEE PROFILES)

Ductbank Name	Profile No.	Curve No.	Center of Radius	Radius of Curvature	Point of Curvature	Point of Tangency
DBP-SUB1/MH5	1	1	N1460.45 E4713.99	15.25'	N1440.03 E4718.99	N1455.28 E4703.74
DBC-SUB1/MH6	3	2	N1454.92 E4744.24	10.00'	N1444.92 E4744.24	N1454.92 E4734.24
DBC-MH4/SHT1	5	3	N1337.34 E4656.77	20.00'	N1330.58 E4637.94	N1317.48 E4654.36
DBP-MH3/SHT1	6	4	N1335.09 E4646.52	20.00'	N1328.25 E4627.72	N1322.50 E4630.98
DBP-MH3/SHT1	6	5	N1333.18 E4648.07	20.00'	N1320.59 E4632.53	N1313.22 E4646.68
DBC-MH9/AB34	7	6	N1427.77 E4897.33	20.00'	N1427.77 E4917.33	N1412.85 E4910.65
DBP-MH10/AB34	8	7	N1428.25 E4909.41	20.00'	N1423.48 E4928.83	N1409.53 E4916.45
DBC-SUB1/MH4	9	8	N1425.20 E4630.85	20.00'	N1419.56 E4611.66	N1439.34 E4616.70
DBC-SUB1/MH4	9	9	N1456.00 E4647.50	10.00'	N1463.07 E4640.43	N1466.00 E4647.50
DBC-MH4/THK	10	10	N1346.84 E4663.59	12.00'	N1357.53 E4660.08	N1358.09 E4663.70
DBP-SUB1/MH3	11	11	N1420.58 E4619.81	20.00'	N1414.50 E4600.76	N1434.73 E4605.66
DBP-SUB1/MH3	11	12	N1459.00 E4644.08	10.00'	N1466.07 E4637.01	N1469.00 E4644.08
DBP-MH3/THK	12	13	N1334.72 E4655.34	12.00'	N1345.83 E4650.81	N1346.72 E4655.34
DBC-MH9/MH11	13	14	N1321.78 E4949.38	20.00'	N1319.61 E4929.50	N1316.78 E4930.01
DBC-MH11/OPS	14	15	N1241.66 E4935.66	20.00'	N1249.68 E4953.99	N1241.64 E4955.66
DBC-SUB1/SHT2	15	16	N1460.45 E4713.99	10.00'	N1452.87 E4720.51	N1459.00 E4723.89
DBC-MH6/WAS	16	17	N1424.24 E4776.66	20.00'	N1444.24 E4776.66	N1441.19 E4787.28
DBC-MH6/WAS	16	18	N1419.25 E4784.62	20.00'	N1436.20 E4795.24	N1431.39 E4800.51
DBP-MH5/WAS	17	19	N1416.17 E4781.29	20.00'	N1436.17 E4781.29	N1432.02 E4793.48
DBP-HH1/SC3	20	20	N1274.46 E4820.89	15.00'	N1288.67 E4818.00	N1287.85 E4815.35
DBP-HH1/SC3	20	21	N1263.45 E4808.87	20.00'	N1281.90 E4801.14	N1278.12 E4795.28
DBP-HH1/SC3	20	22	N1258.70 E4803.74	20.00'	N1273.37 E4790.15	N1258.70 E4783.74
DBP-HH2/PDPS	21	23	N1244.01 E4700.27	8.00'	N1245.73 E4692.46	N1252.01 E4700.27
DBP-OPS/PDPS	22	24	N1237.92 E4706.80	20.00'	N1223.77 E4692.66	N1217.92 E4706.80
DBC-MH11/RPS2	23	25	N1317.36 E4914.52	20.00'	1297.86 E4918.97	N1297.36 E4914.17
DBC-MH11-RPS1	24	26	N1283.18 E4798.62	20.00'	N1303.18 E4798.62	1300.68 E4808.30
DBC-MH11-RPS1	24	27	N1318.18 E4817.99	20.00'	N1300.68 E4808.30	N1298.18 E4817.99
DBP-HH2/RPS2	25	28	N1306.30 E4786.28	20.00'	N1286.30 E4786.28	N1286.77 E4790.57
DBP-HH2/SC2/RAS	26	29	N1254.05 E4723.14	20.00'	N1254.05 E4703.14	N1269.41 E4710.33
DBP-HH2/SC2/RAS	26	30	N1266.30 E4737.32	20.00'	N1281.66 E4725.01	N1286.30 E4737.82
DBP-HH2/SC2/RAS	26	31	N1266.30 E4771.51	20.00'	N1286.30 E4771.47	N1282.14 E4789.73
DBC-MH2/FLTR	27	32	N1123.77 E4750.78	15.00'	N1108.77 E4750.78	N1123.77 E4735.78
DBC/MH2/NPW	28	33	N1123.77 E4758.73	15.00'	N1108.77 E4758.73	N1123.77 E4743.73
DBP-MH12/SC3	29	34	N1248.11 E4857.81	20.00'	N1248.11 E4857.81	N1257.92 E4860.39
DBP-OPS/FLTR	30	35	N1162.84 E4737.82	20.00'	N1174.84 E4891.25	N1162.84 E4903.25

DUCT BANK CURVE TABLE (SEE PROFILES) CONT.

Ductbank Name	Profile No.	Curve No.	Center of Radius	Radius of Curvature	Point of Curvature	Point of Tangency
DBP-OPS/MH1	31	36	N1097.98 E4812.54	20.00'	N1117.98 E4812.54	N1115.37 E4822.42
DBP-OPS/MH1	31	37	N1132.76 E4832.30	20.00'	N1115.37 E4822.42	N1112.76 E4832.33
DBP-OPS/MH1	31	38	N1130.82 E4884.29	18.00'	N1112.82 E4884.30	N1130.82 E4902.29
DBP-MH1/NPW	32	39	N1097.98 E4783.48	20.00'	N1117.98 E4783.48	N1115.30 E4773.48
DBP-MH1/NPW	32	40	N1128.41 E4766.19	15.00'	N1115.30 E4773.48	N1113.41 E4766.19
DBP-MH1/NPW	32	41	N1128.41 E4761.69	15.00'	N1113.41 E4761.69	N1113.92 E4757.81
DBC-OPS/MH2	33	42	N1128.77 E4882.29	20.00'	N1108.77 E4882.29	N1128.77 E4902.29
DBP-MH1/FLTR	34	43	N1129.56 E4758.18	20.00'	N1112.24 E4768.18	N1109.56 E4758.18
DBP-MH1/FLTR	34	44	N1124.56 E4754.88	15.00'	N1109.56 E4754.88	N1124.56 E4739.88
DBC-SUB1/MH8	35	46	N1491.12 E4782.93	19.75'	N1510.87 E4782.93	N1502.53 E4766.81
DBP-MH7/MH10	36	47	N1500.37 E4909.01	20.00'	N1520.37 E4909.01	N1500.37 E4929.01
DBC-MH8/MH9	37	48	N1492.69 E4899.46	18.00'	N1510.69 E4899.46	N1492.69 E4917.46
DBP-SUB1/MH7	40	49	N1500.37 E4719.54	20.00'	N1520.37 E4719.54	N1514.51 E4705.39
DBP-SUB1/MH7	40	50	N1496.46 E4715.99	20.25'	N1510.78 E4701.67	N1496.46 E4695.74

DUCT BANK SCHEDULE (SEE PLAN)

Ductbank Name	Line/Curve No.	Center of Radius Point	Radius of Curvature	Point of Curvature	Point of Tangency	Size [WxH]	LINE START	LINE STOP	Length [ft]
DBC-ATT/SUB1	L-1	N/A	N/A	N/A	N/A	24" x 24"	N1595.59 E4525.74	N1508.48 E4566.37	96.12
	C-1	N1515.27 E4580.92	16.06'	N1508.48 E4566.37	N1499.20 E4580.92	24" x 24"	N/A	N/A	18.22
	L-2	N/A	N/A	N/A	N/A	24" x 24"	N1499.20 E4580.92	N1499.20 E4685.66	104.73
	C-2	N1489.20 E4685.66	10.00'	N1499.20 E4685.66	N1494.57 E4694.10	24" x 24"	N/A	N/A	10.05
DBP-BEC/SUB1	L-3	N/A	N/A	N/A	N/A	30" x 16"	N1491.42 E4630.00	N1491.42 E4638.00	8.00
DBP-XFMRA/SUB1	L-5	N/A	N/A	N/A	N/A	30" x 30"	N1488.84 E4638.75	N1488.84 E4638.75	10.58
DBP-XFMRB/SUB1	L-6	N/A	N/A	N/A	N/A	30" x 30"	N1480.15 E4638.62	N1484.72 E4646.55	9.15
	C-4	N1476.05 E4651.54	10	N1484.72 E4646.55	N1485.80 E4649.33	30" x 30"	N/A	N/A	3.00
DBC-SUB1/MH8-B	L-7	N/A	N/A	N/A	N/A	12" x 12"	N1510.86 E4782.93	N1511.78 E4774.77	8.01
	C-5	N1499.87 E4773.39	12.00'	N1511.78 E4774.77	N1511.87 E4773.39	12" x 12"	N/A	N/A	1.38
	L-8	N/A	N/A	N/A	N/A	12" x 12"	N1511.87 E4773.39	N1511.87 E4749.90	23.50
	C-6	N1499.87 E4749.90	12.00'	N1511.87 E4749.90	N1508.87 E4741.96	12" x 12"	N/A	N/A	8.68
	L-9	N/A	N/A	N/A	N/A	12" x 12"	N1508.87 E4741.96	N1495.00 E4726.24	20.96
DBC-SUB1/MH8-C	L-10	N/A	N/A	N/A	N/A	12" x 12"	N1511.87 E4749.90	N1511.87 E4714.02	35.87
	C-7	N1499.87 E4714.02	12.00'	N1511.87 E4714.02	N1505.77 E4703.58	12" x 12"	N/A	N/A	12.68
	L-11	N/A	N/A	N/A	N/A	12" x 12"	N1505.77 E4703.58	N1495 E4697.49	12.37
DBC-MH6/AB34	L-12	N/A	N/A	N/A	N/A	12" x 12"	N1444.45 E4776.66	N1445.05 E4780.44	3.83
	C-8	N1430.24 E4782.79	15.00'	N1445.05 E4780.44	N1445.24 E4782.79	12" x 12"	N/A	N/A	2.36
	L-13	N/A	N/A	N/A	N/A	12" x 12"	N1445.24 E4782.79	N1445.24 E4839.19	56.40
	C-9	N1435.24 E4839.19	10.00'	N1445.24 E4839.19	N1435.24 E4849.19	12" x 12"	N/A	N/A	15.71
	L-14	N/A	N/A	N/A	N/A	12" x 12"	N1435.24 E4849.19	N1426.43 E4849.19	8.81
DBP-MH5/AB34	L-15	N/A	N/A	N/A	N/A	12" x 12"	N1436.85 E4778.76	N1436.85 E4839.19	60.44
	C-10	N1426.85 E4839.19	10.00'	N1436.85 E4839.19	N1426.43 E4849.19	12" x 12"	N/A	N/A	16.12
DB-HH2/SC1	L-16	N/A	N/A	N/A	N/A	18" x 12"	N1286.28 E4752.34	N1284.69 E4758.21	6.08
	C-11	N1270.21 E4754.30	15.00'	N1284.69 E4758.21	N1283.21 E4761.80	18" x 12"	N/A	N/A	3.90
	L-17	N/A	N/A	N/A	N/A	18" x 12"	N1283.21 E4761.80	N1281.77 E4764.28	2.86
	C-12	N1268.78 E4756.78	15.00'	N1281.77 E4764.28	N1280.63 E4765.98	18" x 12"	N/A	N/A	2.05
	L-18	N/A	N/A	N/A	N/A	18" x 12"	N1280.63 E4765.98	N1277.94 E4769.44	4.39
DBP-HH2/RPS1	C-13	N1318.21 E4751.33	31.85'	N1286.37 E4752.26	N1290.98 E4767.86	REF ELEC.	N/A	N/A	16.44
	L-19	N/A	N/A	N/A	N/A	REF ELEC.	N1290.98 E4767.86	N1292.08 E4769.16	1.71
DB-HH1/SC2	C-14	N1247.98 E4803.75	21.11'	N1254.48 E4783.66	N1261.57 E4787.59	REF ELEC.	N/A	N/A	8.15
	L-20	N/A	N/A	N/A	N/A	REF ELEC.	N1261.57 E4787.59	N1264.69 E4790.83	4.50
DB-MH11/SCWW2	L-21	N/A	N/A	N/A	N/A	18" x 18"	N1299.21 E4927.06	N1296.57 E4917.96	9.47
	L-22	N/A	N/A	N/A	N/A	18" x 18"	N1296.57 E4917.96	N1292.39 E4896.75	21.62
	L-23	N/A	N/A	N/A	N/A	18" x 18"	N1292.39 E4896.75	N1282.83 E4875.48	26.79

DUCT BANK SCHEDULE (SEE PLAN) CONT.

Ductbank Name	Line/Curve No.	Center of Radius Point	Radius of Curvature	Point of Curvature	Point of Tangency	Size [WxH]	LINE START	LINE STOP	Length [ft]
DB-MH11/SC3	L-24	N/A	N/A	N/A	N/A	12" x 12"	N1292.39 E4896.75	N1279.13 E4873.61	26.67
	C-15	N1270.45 E4878.58	10.00'	N1279.13 E4873.61	N1275.25 E4869.80	12" x 12"	N/A	N/A	5.50
	L-25	N/A	N/A	N/A	N/A	12" x 12"	N1275.25 E4869.80	N1270.58 E4867.25	5.32
DB-HH2/SCWW2	L-26	N/A	N/A	N/A	N/A	12" x 12"	N1290.79 E4812.87	N1288.49 E4826.31	13.23
	L-27	N/A	N/A	N/A	N/A	12" x 12"	N1288.49 E4826.31	N1281.98 E4868.30	38.10
DB-MH12/SCWW2	L-28	N/A	N/A	N/A	N/A	12" x 12"	N1248.11 E4857.50	N1268.07 E4857.03	19.76
	C-16	N1268.33 E4868.02	11.00'	N1268.07 E4857.03	N1277.79 E4862.42	12" x 12"	N/A	N/A	11.66
	L-29	N/A	N/A	N/A	N/A	12" x 12"	N1277.79 E4862.42	N1281.49 E4868.67	7.26
DB-MH11/AB34	L-30	N/A	N/A	N/A	N/A	12" x 20"	N1304.00 E4933.00	N1305.59 E4932.17	1.79
	C-17	N1299.85 E4922.29	11.42'	N1305.59 E4932.17	N1311.26 E4922.80	12" x 20"	N/A	N/A	11.42
	L-31	N/A	N/A	N/A	N/A	12" x 20"	N1311.26 E4922.80	N1311.36 E4905.09	17.71
DB-HH2/SCWW1	C-18	N1266.41 E4771.51	19.90'	N1286.31 E4771.48	N1282.12 E4783.72	REF ELEC.	N/A	N/A	13.18
DB-AD/FLTR	L-32	N/A	N/A	N/A	N/A	30" x 18"	N1142.10 E4832.02	N1142.10 E4828.33	3.68
DBP-SUB1/OPS	L-33	N/A	N/A	N/A	N/A	36" x 18"	N1502.27 E4638.75	N1492.92 E4638.75	9.35
DBP-BEC2/SUB1	L-34	N/A	N/A	N/A	N/A	36" x 18"	N1502.27 E4642.75	N1489.44 E4642.41	10.24
	C-19	N1492.03 E4632.75	10.00'	N1489.44 E4642.41	N1487.03 E4641.41	36" x 18"	N1489.44 E4642.41	N1487.03 E4641.41	5.24
	L-35	N/A	N/A	N/A	N/A	36" x 18"	N1487.03 E4641.41	N1482.42 E4638.75	5.32
DBP-MH11/SCWW1	L-36	N/A	N/A	N/A	N/A	15" x 12"	N1288.13 E4798.13	N1282.12 E4789.48	10.53

THIS CONFORMED DOCUMENT IS RELEASED FOR THE CONVENIENCE OF THE CONTRACTOR UNDER THE AUTHORITY OF:

CASEY G. WAUTERS, P.E.
TX LIC NO. 93889

11-01-22
DATE

SEE DISCLAIMER FOR LIMITATIONS OF USE.

CONTRACT DOCUMENTS DATED JUNE 10, 2022, AS PART OF THE BIDDING DOCUMENTS (DRAWINGS AND SPECIFICATIONS) AND SUBSEQUENTLY ISSUED ADDENDA HAVE BEEN MERGED INTO ONE CONFORMING SET OF DOCUMENTS FOR THE CONVENIENCE OF THE CONTRACTOR. IF INCONSISTENCIES OR AMBIGUITIES BETWEEN "CONFORMED" DOCUMENTS AND CONTRACT DOCUMENTS ARE FOUND, THE CONTRACT DOCUMENTS SHALL GOVERN.

REV	DATE	BY	DESCRIPTION
			CONFORMED DOCUMENTS

DESIGNED NL/CW
DRAWN AW
CHECKED SGE
DATE FEBRUARY 2022

** ORIGINAL SEALED BY CASEY G. WAUTERS, P.E. 2/28/2022 TX PE 93889 **

AECOM TECHNICAL SERVICES INC.
13640 BRIARWICK DRIVE, SUITE 200
AUSTIN, TEXAS 78729
WWW.AECOM.COM
TBPE REG. NO. F-3580

carollo
TBPE No. F-882

CITY OF AUSTIN
FOUNDED 1839

CITY OF AUSTIN

CITY OF AUSTIN
WILD HORSE RANCH WWTP EXPANSION
CIVIL
ELECTRICAL DUCT BANK CURVE TABLE

VERIFY SCALES
BAR IS ONE INCH ON ORIGINAL DRAWING
0 1"
IF NOT ONE INCH ON THIS SHEET, ADJUST SCALES ACCORDINGLY

JOB NO. 10976A.10
DRAWING NO. 02C53
SHEET NO. 275 OF 464

LAST SAVED BY: dsievert

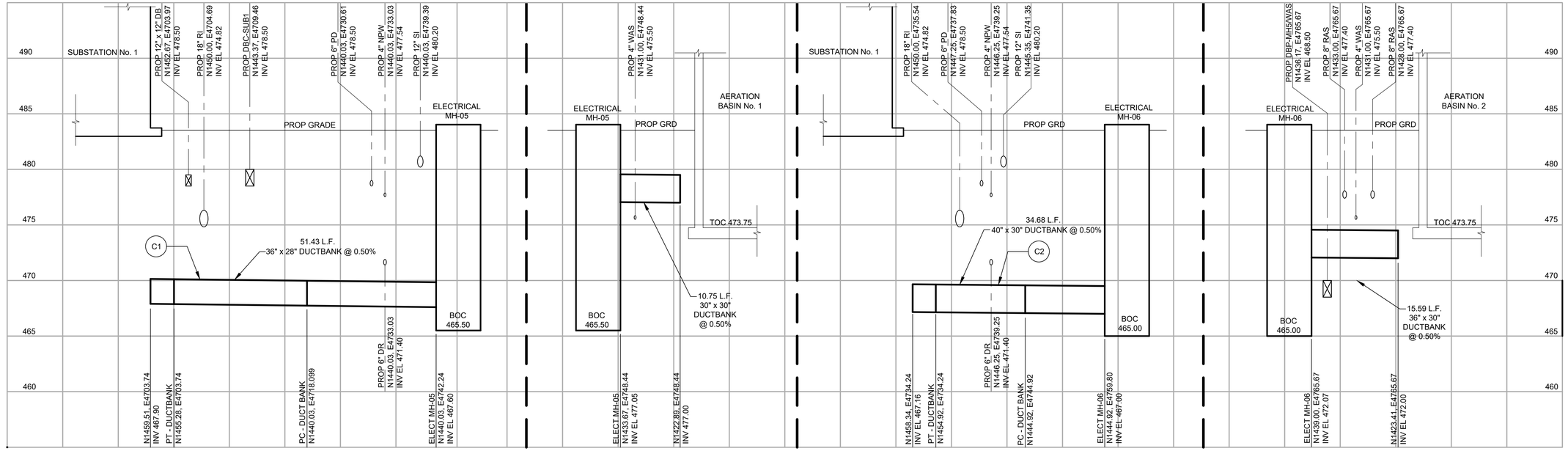

1 02C52 **DBP-SUB1/MH5**
SCALE: 1"=10' HORIZ, 1"= 5' VERTICAL
FILE:

2 02C52 **DBP-MH5/AB12**
SCALE: 1"=10' HORIZ, 1"= 5' VERTICAL
FILE:

3 02C52 **DBC-SUB1/MH6**
SCALE: 1"=10' HORIZ, 1"= 5' VERTICAL
FILE:

4 02C52 **DBC-MH6/AB12**
SCALE: 1"=10' HORIZ, 1"= 5' VERTICAL
FILE:

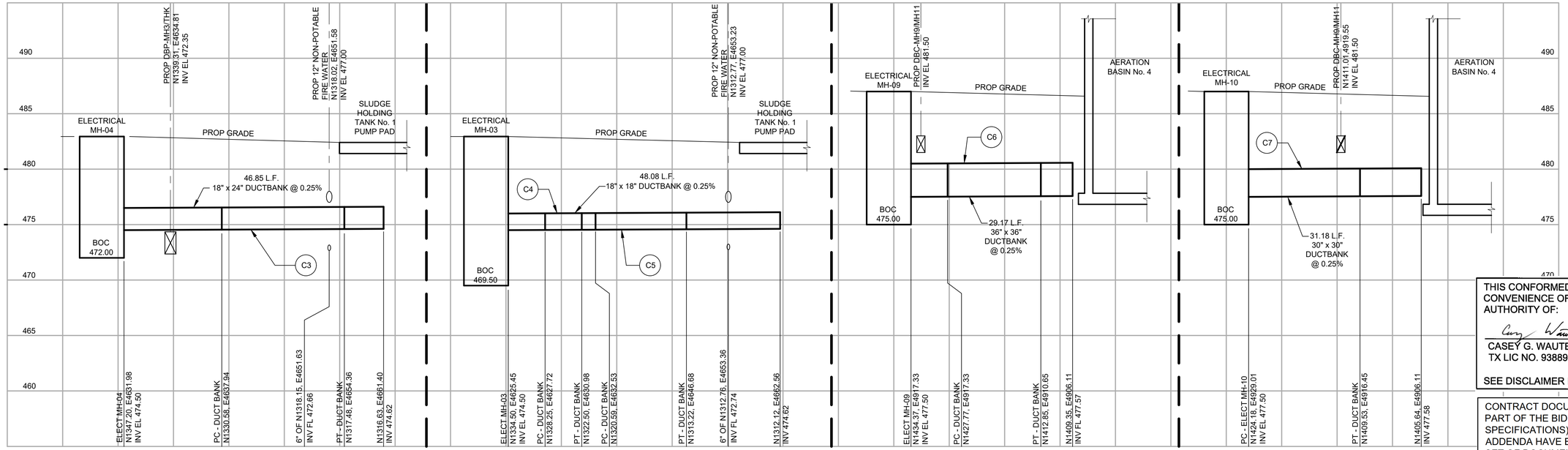

5 02C52 **DBC-MH4/SHT1**
SCALE: 1"=10' HORIZ, 1"= 5' VERTICAL
FILE:

6 02C52 **DBP-MH3/SHT1**
SCALE: 1"=10' HORIZ, 1"= 5' VERTICAL
FILE:

7 02C52 **DBC-MH9/AB34**
SCALE: 1"=10' HORIZ, 1"= 5' VERTICAL
FILE:

8 02C52 **DBP-MH10/AB34**
SCALE: 1"=10' HORIZ, 1"= 5' VERTICAL
FILE:

NOTES:

1. EXISTING UTILITY INFORMATION SHOWN AS BACKGROUND IN PLAN VIEW, WAS OBTAINED FROM AVAILABLE RECORD DRAWINGS FROM A PREVIOUS PROJECT WHICH MAY NOT BE COMPLETE OR ACCURATE. IT IS INTENDED TO PROVIDE BASIC INFORMATION ON EXISTING FACILITIES. CONTRACTOR IS RESPONSIBLE FOR FIELD VERIFYING THE LOCATION AND ELEVATION OF EXISTING UTILITIES PRIOR TO CONSTRUCTION.
2. PROPOSED DUCTBANKS ON THIS DRAWING ARE SHOWING THE FINAL LAYOUT. REFERENCE ELECTRICAL SITE PLAN AND DEMO FOR CONSTRUCTION PHASING.

LEGEND:

C# CURVE NUMBER

THIS CONFORMED DOCUMENT IS RELEASED FOR THE CONVENIENCE OF THE CONTRACTOR UNDER THE AUTHORITY OF:

CASEY G. WAUTERS, P.E. 11-01-22
TX LIC NO. 93889 DATE

SEE DISCLAIMER FOR LIMITATIONS OF USE.

CONTRACT DOCUMENTS DATED JUNE 10, 2022, AS PART OF THE BIDDING DOCUMENTS (DRAWINGS AND SPECIFICATIONS) AND SUBSEQUENTLY ISSUED ADDENDA HAVE BEEN MERGED INTO ONE CONFORMING SET OF DOCUMENTS FOR THE CONVENIENCE OF THE CONTRACTOR. IF INCONSISTENCIES OR AMBIGUITIES BETWEEN "CONFORMED" DOCUMENTS AND CONTRACT DOCUMENTS ARE FOUND, THE CONTRACT DOCUMENTS SHALL GOVERN.

REV	DATE	BY	DESCRIPTION
			CONFORMED DOCUMENTS

DESIGNED NL/CW
DRAWN AW
CHECKED SGE
DATE MAY 2022

ORIGINAL SEALED BY CASEY G. WAUTERS, P.E. 5/9/2022 TX PE 93889

AECOM TECHNICAL SERVICES INC.
13640 BRIARWICK DRIVE, SUITE 200
AUSTIN, TEXAS 78729
WWW.AECOM.COM
TBPE REG. NO. F-3580

carollo
TBPE No. F-882

CITY OF AUSTIN

CITY OF AUSTIN
WILD HORSE RANCH WWTP EXPANSION
CIVIL
ELECTRICAL DUCTBANKS PROFILES
SHEET 1 OF 8

VERIFY SCALES
BAR IS ONE INCH ON ORIGINAL DRAWING
0 1"
IF NOT ONE INCH ON THIS SHEET, ADJUST SCALES ACCORDINGLY

JOB NO. 10976A.10
DRAWING NO. 02C60
SHEET NO. 276 OF 464

LAST SAVED BY: dseivert

PROJECT NO. 9585A10 FILE NAME: 9585A10_SheetSeed.dgn

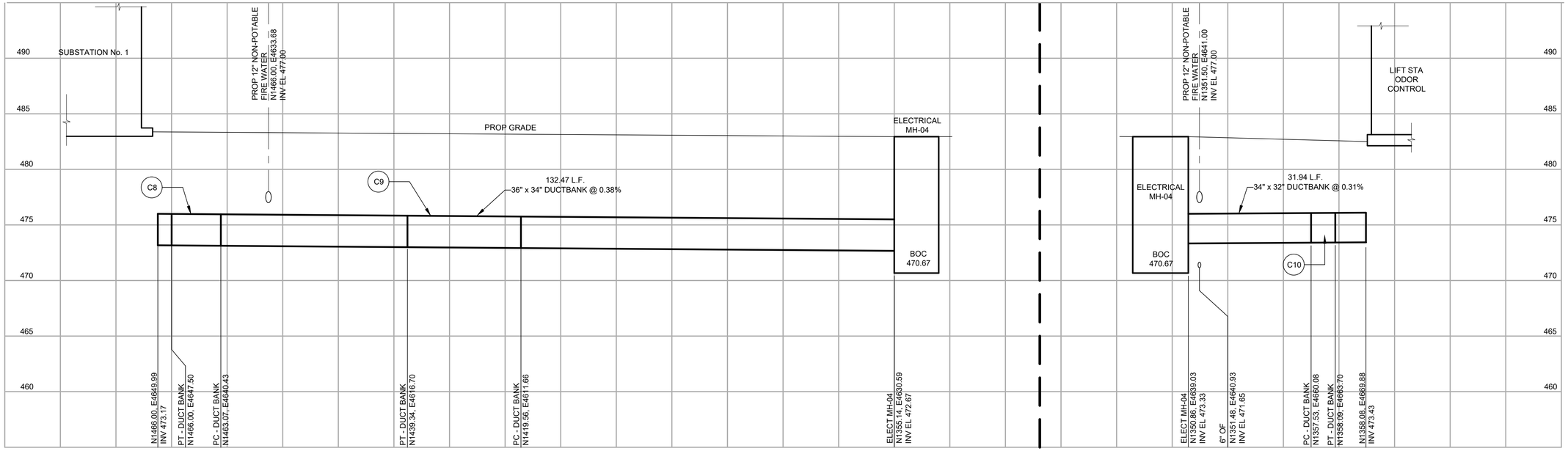

9 02C52 **DBC-SUB1/MH4**
SCALE: 1"=10' HORIZ, 1"= 5' VERTICAL
FILE:

10 02C52 **DBC-MH4/THK**
SCALE: 1"=10' HORIZ, 1"= 5' VERTICAL
FILE:

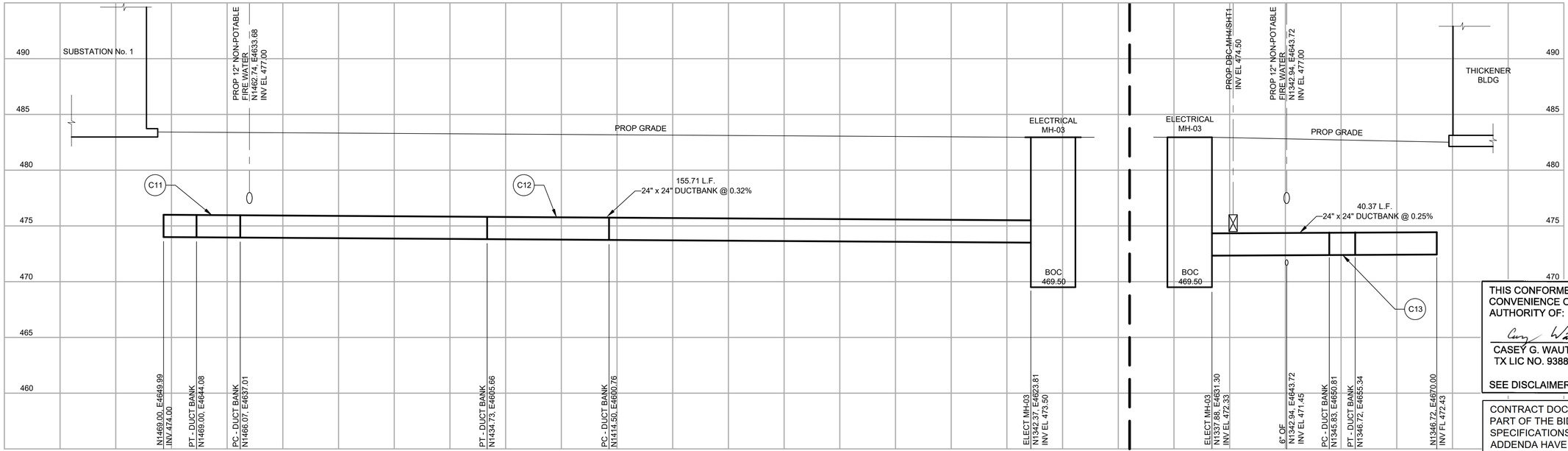

11 02C52 **DBP-SUB1/MH3**
SCALE: 1"=10' HORIZ, 1"= 5' VERTICAL
FILE:

12 02C52 **DBP-MH3/THK**
SCALE: 1"=10' HORIZ, 1"= 5' VERTICAL
FILE:

NOTES:

1. EXISTING UTILITY INFORMATION SHOWN AS BACKGROUND IN PLAN VIEW, WAS OBTAINED FROM AVAILABLE RECORD DRAWINGS FROM A PREVIOUS PROJECT WHICH MAY NOT BE COMPLETE OR ACCURATE. IT IS INTENDED TO PROVIDE BASIC INFORMATION ON EXISTING FACILITIES. CONTRACTOR IS RESPONSIBLE FOR FIELD VERIFYING THE LOCATION AND ELEVATION OF EXISTING UTILITIES PRIOR TO CONSTRUCTION.
2. PROPOSED DUCTBANKS ON THIS DRAWING ARE SHOWING THE FINAL LAYOUT. REFERENCE ELECTRICAL SITE PLAN AND DEMO FOR CONSTRUCTION PHASING.

LEGEND:

C# CURVE NUMBER

THIS CONFORMED DOCUMENT IS RELEASED FOR THE CONVENIENCE OF THE CONTRACTOR UNDER THE AUTHORITY OF:

CASEY G. WAUTERS, P.E. 11-01-22
TX LIC NO. 93889 DATE

SEE DISCLAIMER FOR LIMITATIONS OF USE.

CONTRACT DOCUMENTS DATED JUNE 10, 2022, AS PART OF THE BIDDING DOCUMENTS (DRAWINGS AND SPECIFICATIONS) AND SUBSEQUENTLY ISSUED ADDENDA HAVE BEEN MERGED INTO ONE CONFORMING SET OF DOCUMENTS FOR THE CONVENIENCE OF THE CONTRACTOR. IF INCONSISTENCIES OR AMBIGUITIES BETWEEN "CONFORMED" DOCUMENTS AND CONTRACT DOCUMENTS ARE FOUND, THE CONTRACT DOCUMENTS SHALL GOVERN.

REV	DATE	BY	DESCRIPTION
			CONFORMED DOCUMENTS

DESIGNED NL/CW
DRAWN AW
CHECKED SGE
DATE MAY 2022

**
ORIGINAL
SEALED BY
CASEY G. WAUTERS, P.E.
5/9/2022
TX PE 93889
**

AECOM TECHNICAL SERVICES INC.
13640 BRIARWICK DRIVE, SUITE 200
AUSTIN, TEXAS 78729
WWW.AECOM.COM
TBPE REG. NO. F-3580

TBPE No. F-882

CITY OF AUSTIN

CITY OF AUSTIN
WILD HORSE RANCH WWTP EXPANSION
CIVIL
ELECTRICAL DUCTBANKS PROFILES
SHEET 2 OF 8

VERIFY SCALES
BAR IS ONE INCH ON ORIGINAL DRAWING
0 1"
IF NOT ONE INCH ON THIS SHEET, ADJUST SCALES ACCORDINGLY

JOB NO. 10976A.10
DRAWING NO. 02C61
SHEET NO. 277 OF 464

LAST SAVED BY: dseivert

PROJECT NO. 9585A10 FILE NAME: 9585A10_SheetSeed.dgn

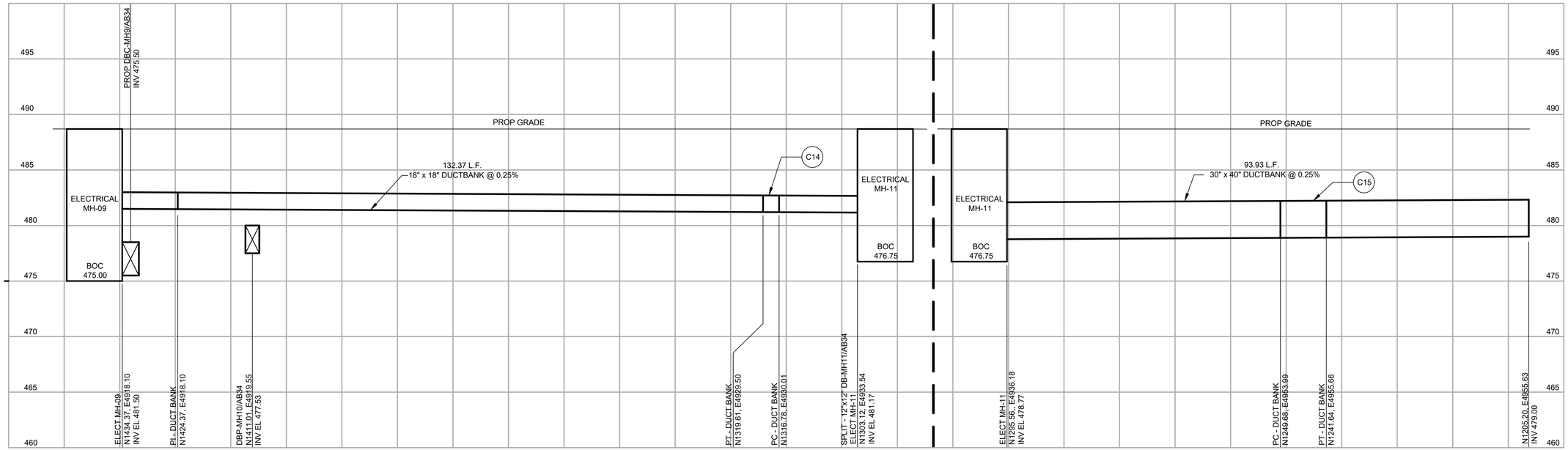

13 DBC-MH9/MH11
02C52 SCALE: 1"=10' HORIZ, 1"= 5' VERTICAL
FILE:

14 DPC-MH11/OPS
02C52 SCALE: 1"=10' HORIZ, 1"= 5' VERTICAL
FILE:

NOTES:

1. EXISTING UTILITY INFORMATION SHOWN AS BACKGROUND IN PLAN VIEW, WAS OBTAINED FROM AVAILABLE RECORD DRAWINGS FROM A PREVIOUS PROJECT WHICH MAY NOT BE COMPLETE OR ACCURATE. IT IS INTENDED TO PROVIDE BASIC INFORMATION ON EXISTING FACILITIES. CONTRACTOR IS RESPONSIBLE FOR FIELD VERIFYING THE LOCATION AND ELEVATION OF EXISTING UTILITIES PRIOR TO CONSTRUCTION.
2. PROPOSED DUCTBANKS ON THIS DRAWING ARE SHOWING THE FINAL LAYOUT. REFERENCE ELECTRICAL SITE PLAN AND DEMO FOR CONSTRUCTION PHASING.

LEGEND:

C# CURVE NUMBER

15 DBC-SUB1/SHT2
02C52 SCALE: 1"=10' HORIZ, 1"= 5' VERTICAL
FILE:

16 DBC-MH6/WAS
02C52 SCALE: 1"=10' HORIZ, 1"= 5' VERTICAL
FILE:

17 DBP-MH5/WAS
02C52 SCALE: 1"=10' HORIZ, 1"= 5' VERTICAL
FILE:

THIS CONFORMED DOCUMENT IS RELEASED FOR THE CONVENIENCE OF THE CONTRACTOR UNDER THE AUTHORITY OF:

CASEY G. WAUTERS, P.E. 11-01-22
TX LIC NO. 93889 DATE

SEE DISCLAIMER FOR LIMITATIONS OF USE.

CONTRACT DOCUMENTS DATED JUNE 10, 2022, AS PART OF THE BIDDING DOCUMENTS (DRAWINGS AND SPECIFICATIONS) AND SUBSEQUENTLY ISSUED ADDENDA HAVE BEEN MERGED INTO ONE CONFORMING SET OF DOCUMENTS FOR THE CONVENIENCE OF THE CONTRACTOR. IF INCONSISTENCIES OR AMBIGUITIES BETWEEN "CONFORMED" DOCUMENTS AND CONTRACT DOCUMENTS ARE FOUND, THE CONTRACT DOCUMENTS SHALL GOVERN.

REV	DATE	BY	DESCRIPTION
			CONFORMED DOCUMENTS

DESIGNED NL/CW
DRAWN AW
CHECKED SGE
DATE FEBRUARY 2022

** ORIGINAL SEALED BY CASEY G. WAUTERS, P.E. 2/28/2022 TX PE 93889 **

AECOM TECHNICAL SERVICES INC.
13640 BRIARWICK DRIVE, SUITE 200
AUSTIN, TEXAS 78729
WWW.AECOM.COM
TBPE REG. NO. F-3580

carollo
TBPE No. F-882

CITY OF AUSTIN
FOUNDED 1839
CITY OF AUSTIN

CITY OF AUSTIN
WILD HORSE RANCH WWTP EXPANSION
CIVIL
ELECTRICAL DUCTBANKS PROFILES
SHEET 3 OF 8

VERIFY SCALES
BAR IS ONE INCH ON ORIGINAL DRAWING
0 1"
IF NOT ONE INCH ON THIS SHEET, ADJUST SCALES ACCORDINGLY

JOB NO. 10976A.10
DRAWING NO. 02C62
SHEET NO. 278 OF 464

LAST SAVED BY: dseivert

PROJECT NO. 9585A10 FILE NAME: 9585A10_SheetSeed.dgn

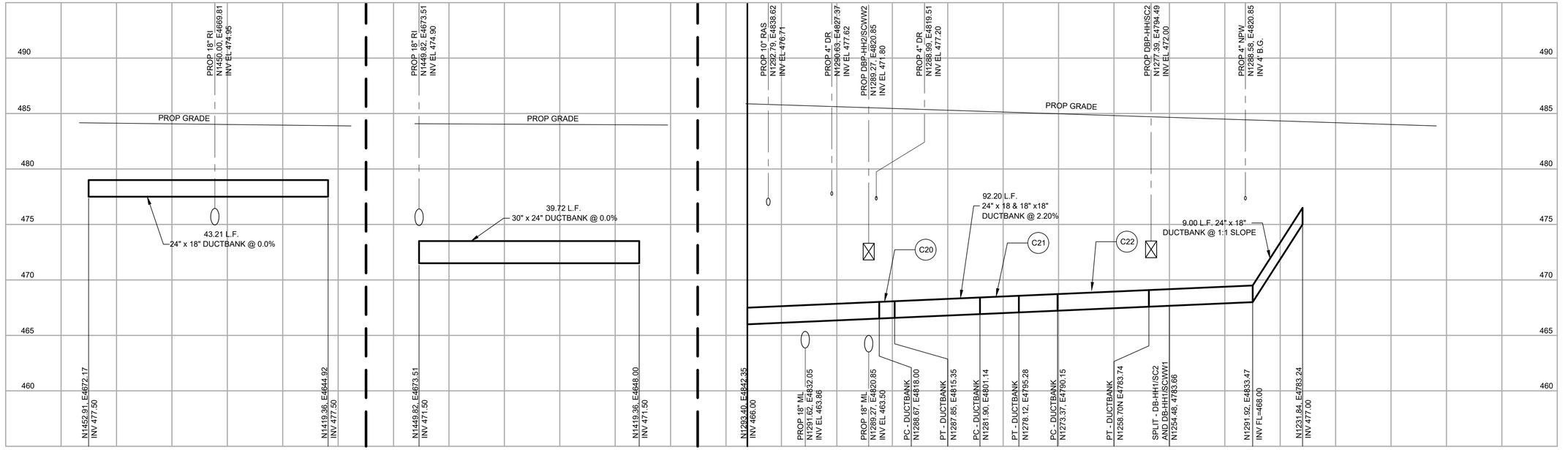

18 DBP-SUB1/LS
02C52
SCALE: 1"=10' HORIZ, 1"= 5' VERTICAL
FILE:

19 DBC-SUB1/LS
02C52
SCALE: 1"=10' HORIZ, 1"= 5' VERTICAL
FILE:

20 DBP-HH1/RPS2 & DBP-HH1/SC23
02C52
SCALE: 1"=10' HORIZ, 1"= 5' VERTICAL
FILE:

NOTES:

1. EXISTING UTILITY INFORMATION SHOWN AS BACKGROUND IN PLAN VIEW, WAS OBTAINED FROM AVAILABLE RECORD DRAWINGS FROM A PREVIOUS PROJECT WHICH MAY NOT BE COMPLETE OR ACCURATE. IT IS INTENDED TO PROVIDE BASIC INFORMATION ON EXISTING FACILITIES. CONTRACTOR IS RESPONSIBLE FOR FIELD VERIFYING THE LOCATION AND ELEVATION OF EXISTING UTILITIES PRIOR TO CONSTRUCTION.
2. PROPOSED DUCTBANKS ON THIS DRAWING ARE SHOWING THE FINAL LAYOUT. REFERENCE ELECTRICAL SITE PLAN AND DEMO FOR CONSTRUCTION PHASING.

LEGEND:

C# CURVE NUMBER

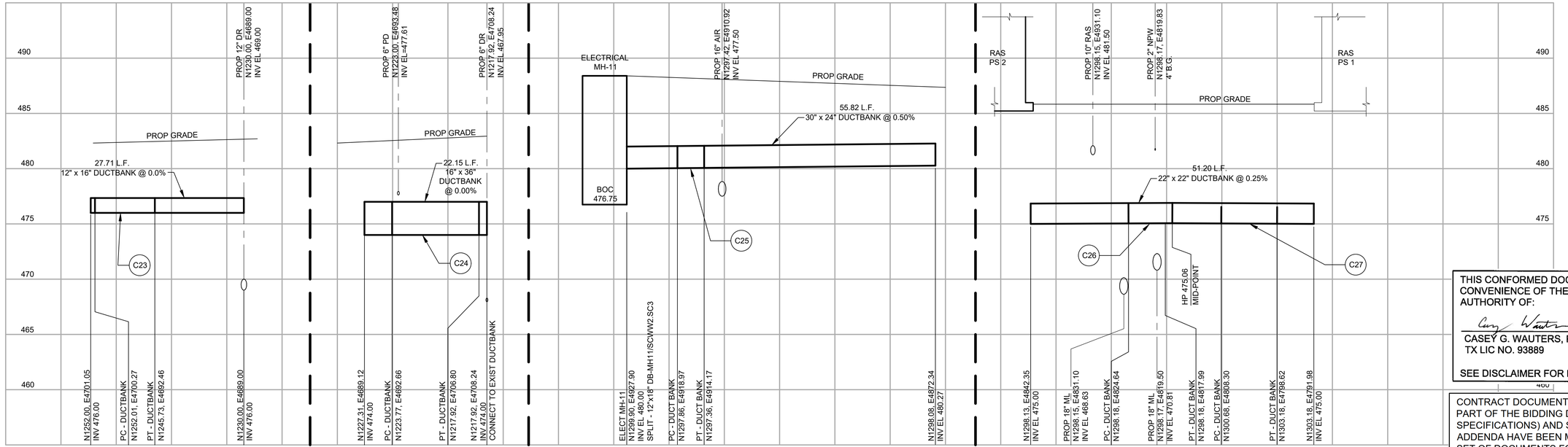

21 DBP-HH2/PDPS
02C52
SCALE: 1"=10' HORIZ, 1"= 5' VERTICAL
FILE:

22 DBP-OPS/PDPS
02C52
SCALE: 1"=10' HORIZ, 1"= 5' VERTICAL
FILE:

23 DBC-MH11/RPS2
02C52
SCALE: 1"=10' HORIZ, 1"= 5' VERTICAL
FILE:

24 DBC-MH11/RPS1
02C52
SCALE: 1"=10' HORIZ, 1"= 5' VERTICAL
FILE:

THIS CONFORMED DOCUMENT IS RELEASED FOR THE CONVENIENCE OF THE CONTRACTOR UNDER THE AUTHORITY OF:

CASEY G. WAUTERS, P.E. 11-01-22
TX LIC NO. 93889 DATE

SEE DISCLAIMER FOR LIMITATIONS OF USE.

CONTRACT DOCUMENTS DATED JUNE 10, 2022, AS PART OF THE BIDDING DOCUMENTS (DRAWINGS AND SPECIFICATIONS) AND SUBSEQUENTLY ISSUED ADDENDA HAVE BEEN MERGED INTO ONE CONFORMING SET OF DOCUMENTS FOR THE CONVENIENCE OF THE CONTRACTOR. IF INCONSISTENCIES OR AMBIGUITIES BETWEEN "CONFORMED" DOCUMENTS AND CONTRACT DOCUMENTS ARE FOUND, THE CONTRACT DOCUMENTS SHALL GOVERN.

REV	DATE	BY	DESCRIPTION
			CONFORMED DOCUMENTS

DESIGNED NL/CW
DRAWN AW
CHECKED SGE
DATE FEBRUARY 2022

** ORIGINAL SEALED BY CASEY G. WAUTERS, P.E. 2/28/2022 TX PE 93889 **

AECOM TECHNICAL SERVICES INC.
13640 BRIARWICK DRIVE, SUITE 200
AUSTIN, TEXAS 78729
WWW.AECOM.COM
TBPE REG. NO. F-3580

carollo
TBPE No. F-882

CITY OF AUSTIN

CITY OF AUSTIN
WILD HORSE RANCH WWTP EXPANSION
CIVIL
ELECTRICAL DUCTBANKS PROFILES
SHEET 4 OF 8

VERIFY SCALES
BAR IS ONE INCH ON ORIGINAL DRAWING
0 1"
IF NOT ONE INCH ON THIS SHEET, ADJUST SCALES ACCORDINGLY

JOB NO. 10976A.10
DRAWING NO. 02C63
SHEET NO. 279 OF 464

LAST SAVED BY: dseivert

PROJECT NO. 9585A10 FILE NAME: 9585A10_SheetSeed.dgn

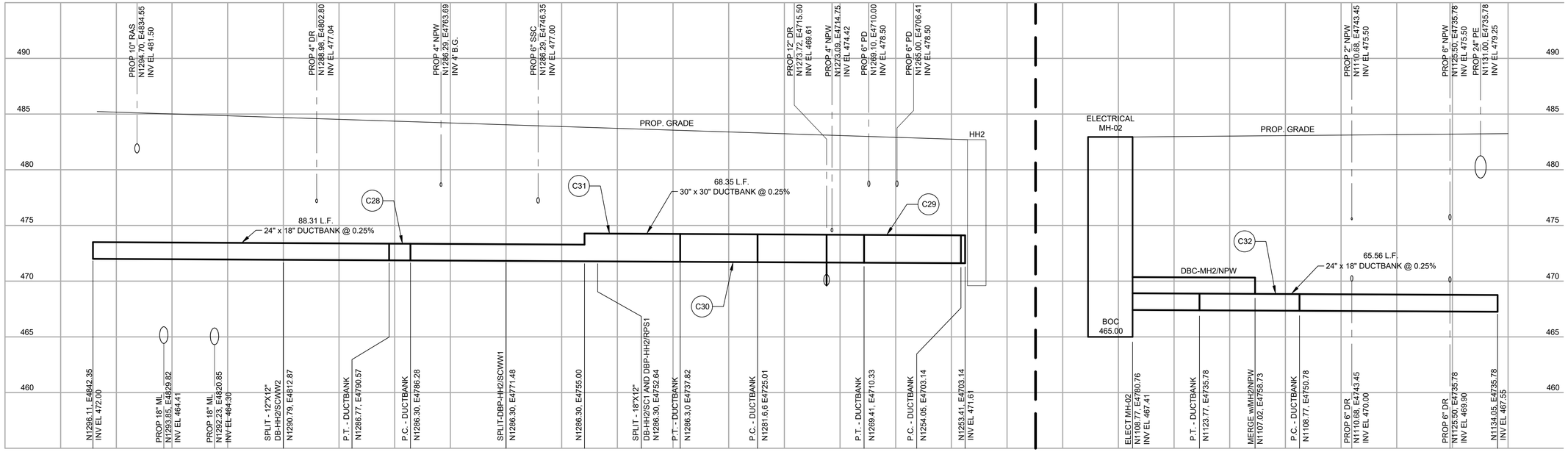

25 02C52 **DBP-HH2/RPS2**
SCALE: 1"=10' HORIZ, 1"= 5' VERTICAL
FILE:

26 02C52 **DBP-HH2/SC2/RAS**
SCALE: 1"=10' HORIZ, 1"= 5' VERTICAL
FILE:

27 02C51 **DBC-MH2/FLTR**
SCALE: 1"=10' HORIZ, 1"= 5' VERTICAL
FILE:

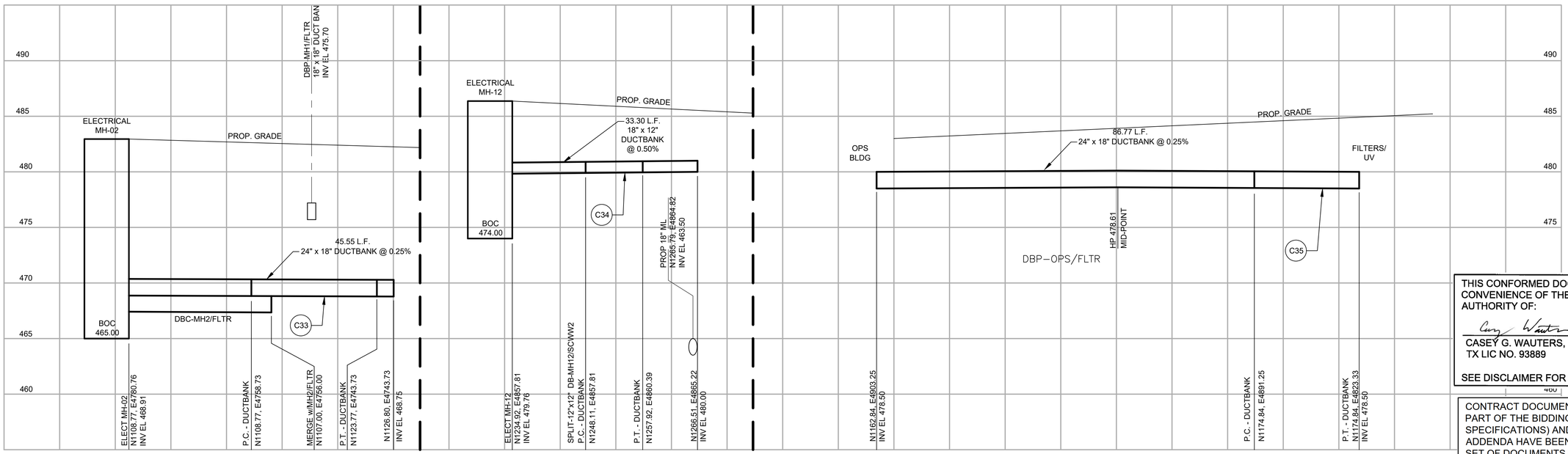

28 02C51 **DBC-MH2/NPW**
SCALE: 1"=10' HORIZ, 1"= 5' VERTICAL
FILE:

29 02C52 **DBP-MH12/SC3**
SCALE: 1"=10' HORIZ, 1"= 5' VERTICAL
FILE:

30 02C51 **DBP-OPS/FLTR**
SCALE: 1"=10' HORIZ, 1"= 5' VERTICAL
FILE:

NOTES:

1. EXISTING UTILITY INFORMATION SHOWN AS BACKGROUND IN PLAN VIEW, WAS OBTAINED FROM AVAILABLE RECORD DRAWINGS FROM A PREVIOUS PROJECT WHICH MAY NOT BE COMPLETE OR ACCURATE. IT IS INTENDED TO PROVIDE BASIC INFORMATION ON EXISTING FACILITIES. CONTRACTOR IS RESPONSIBLE FOR FIELD VERIFYING THE LOCATION AND ELEVATION OF EXISTING UTILITIES PRIOR TO CONSTRUCTION.
2. PROPOSED DUCTBANKS ON THIS DRAWING ARE SHOWING THE FINAL LAYOUT. REFERENCE ELECTRICAL SITE PLAN AND DEMO FOR CONSTRUCTION PHASING.

LEGEND:

C# CURVE NUMBER

THIS CONFORMED DOCUMENT IS RELEASED FOR THE CONVENIENCE OF THE CONTRACTOR UNDER THE AUTHORITY OF:

CASEY G. WAUTERS, P.E. 11-01-22
TX LIC NO. 93889 DATE

SEE DISCLAIMER FOR LIMITATIONS OF USE.

CONTRACT DOCUMENTS DATED JUNE 10, 2022, AS PART OF THE BIDDING DOCUMENTS (DRAWINGS AND SPECIFICATIONS) AND SUBSEQUENTLY ISSUED ADDENDA HAVE BEEN MERGED INTO ONE CONFORMING SET OF DOCUMENTS FOR THE CONVENIENCE OF THE CONTRACTOR. IF INCONSISTENCIES OR AMBIGUITIES BETWEEN "CONFORMED" DOCUMENTS AND CONTRACT DOCUMENTS ARE FOUND, THE CONTRACT DOCUMENTS SHALL GOVERN.

REV	DATE	BY	DESCRIPTION
			CONFORMED DOCUMENTS

DESIGNED NL/CW
DRAWN AW
CHECKED SGE
DATE FEBRUARY 2022

** ORIGINAL SEALED BY CASEY G. WAUTERS, P.E. 2/28/2022 TX PE 93889 **

AECOM TECHNICAL SERVICES INC.
13640 BRIARWICK DRIVE, SUITE 200
AUSTIN, TEXAS 78729
WWW.AECOM.COM
TBPE REG. NO. F-3580

carollo
TBPE No. F-882

CITY OF AUSTIN
FOUNDED 1839

CITY OF AUSTIN

CITY OF AUSTIN
WILD HORSE RANCH WWTP EXPANSION
CIVIL
ELECTRICAL DUCTBANKS PROFILES
SHEET 5 OF 8

VERIFY SCALES
BAR IS ONE INCH ON ORIGINAL DRAWING
0 1"
IF NOT ONE INCH ON THIS SHEET, ADJUST SCALES ACCORDINGLY

JOB NO. 10976A.10
DRAWING NO. 02C64
SHEET NO. 280 OF 464

LAST SAVED BY: dseivert

PROJECT NO. 9585A10 FILE NAME: 9585A10_SheetSeed.dgn

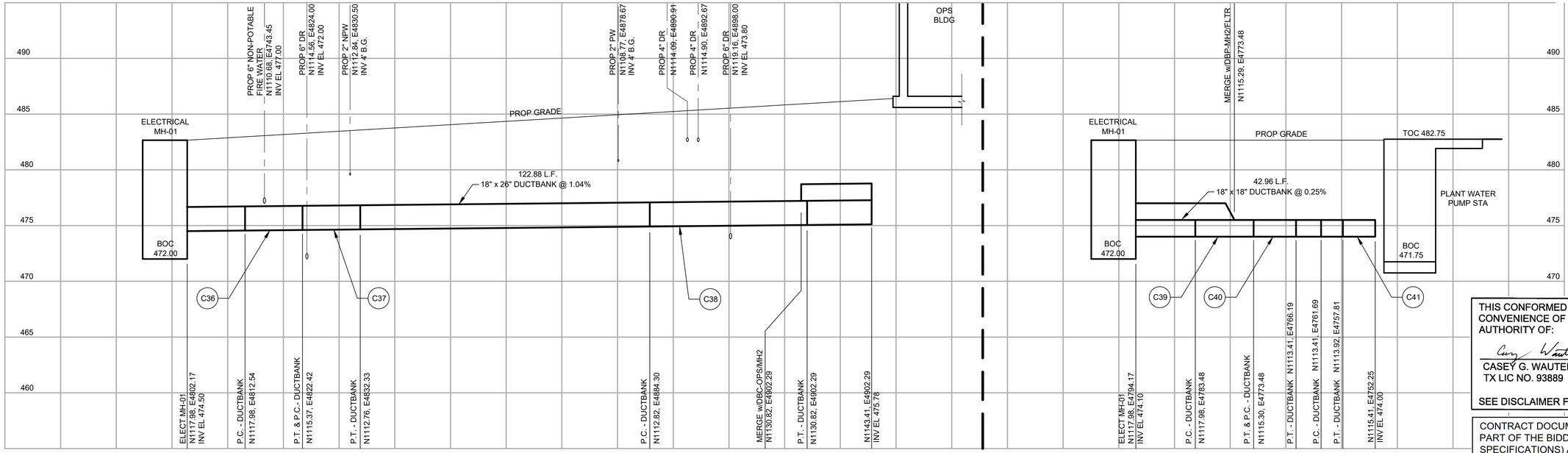

31 02C51 **DBP-OPS/MH1**
SCALE: 1"=10' HORIZ, 1"= 5' VERTICAL
FILE:

32 02C51 **DBP-MH1/NPW**
SCALE: 1"=10' HORIZ, 1"= 5' VERTICAL
FILE:

NOTES:

1. EXISTING UTILITY INFORMATION SHOWN AS BACKGROUND IN PLAN VIEW, WAS OBTAINED FROM AVAILABLE RECORD DRAWINGS FROM A PREVIOUS PROJECT WHICH MAY NOT BE COMPLETE OR ACCURATE. IT IS INTENDED TO PROVIDE BASIC INFORMATION ON EXISTING FACILITIES. CONTRACTOR IS RESPONSIBLE FOR FIELD VERIFYING THE LOCATION AND ELEVATION OF EXISTING UTILITIES PRIOR TO CONSTRUCTION.
2. PROPOSED DUCTBANKS ON THIS DRAWING ARE SHOWING THE FINAL LAYOUT. REFERENCE ELECTRICAL SITE PLAN AND DEMO FOR CONSTRUCTION PHASING.

LEGEND:

C# CURVE NUMBER

THIS CONFORMED DOCUMENT IS RELEASED FOR THE CONVENIENCE OF THE CONTRACTOR UNDER THE AUTHORITY OF:

CASEY G. WAUTERS, P.E.
TX LIC NO. 93889

11-01-22
DATE

SEE DISCLAIMER FOR LIMITATIONS OF USE.

CONTRACT DOCUMENTS DATED JUNE 10, 2022, AS PART OF THE BIDDING DOCUMENTS (DRAWINGS AND SPECIFICATIONS) AND SUBSEQUENTLY ISSUED ADDENDA HAVE BEEN MERGED INTO ONE CONFORMING SET OF DOCUMENTS FOR THE CONVENIENCE OF THE CONTRACTOR. IF INCONSISTENCIES OR AMBIGUITIES BETWEEN "CONFORMED" DOCUMENTS AND CONTRACT DOCUMENTS ARE FOUND, THE CONTRACT DOCUMENTS SHALL GOVERN.

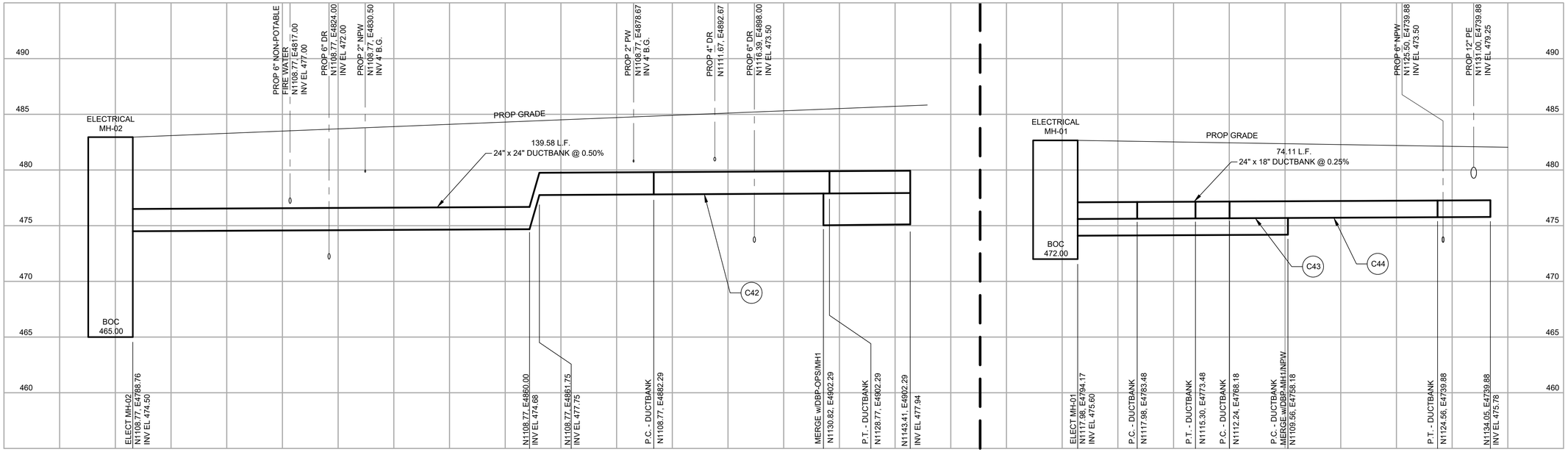

33 02C51 **DBC-OPS/MH2**
SCALE: 1"=10' HORIZ, 1"= 5' VERTICAL
FILE:

34 02C51 **DBP-MH1/FLTR**
SCALE: 1"=10' HORIZ, 1"= 5' VERTICAL
FILE:

REV	DATE	BY	DESCRIPTION
			CONFORMED DOCUMENTS

DESIGNED NL/CW
DRAWN AW
CHECKED SGE
DATE MAY 2022

**
ORIGINAL
SEALED BY
CASEY G. WAUTERS, P.E.
5/9/2022
TX PE 93889
**

AECOM TECHNICAL SERVICES INC.
13640 BRIARWICK DRIVE, SUITE 200
AUSTIN, TEXAS 78729
WWW.AECOM.COM
TBPE REG. NO. F-3580

TBPE No. F-882

CITY OF AUSTIN

CITY OF AUSTIN
WILD HORSE RANCH WWTP EXPANSION
CIVIL
ELECTRICAL DUCTBANKS PROFILES
SHEET 6 OF 8

VERIFY SCALES
BAR IS ONE INCH ON ORIGINAL DRAWING
0 1"
IF NOT ONE INCH ON THIS SHEET, ADJUST SCALES ACCORDINGLY

JOB NO. 10976A.10
DRAWING NO. 02C65
SHEET NO. 281 OF 464

LAST SAVED BY: dseivert

PROJECT NO. 9585A10 FILE NAME: 9585A10_SheetSeed.dgn

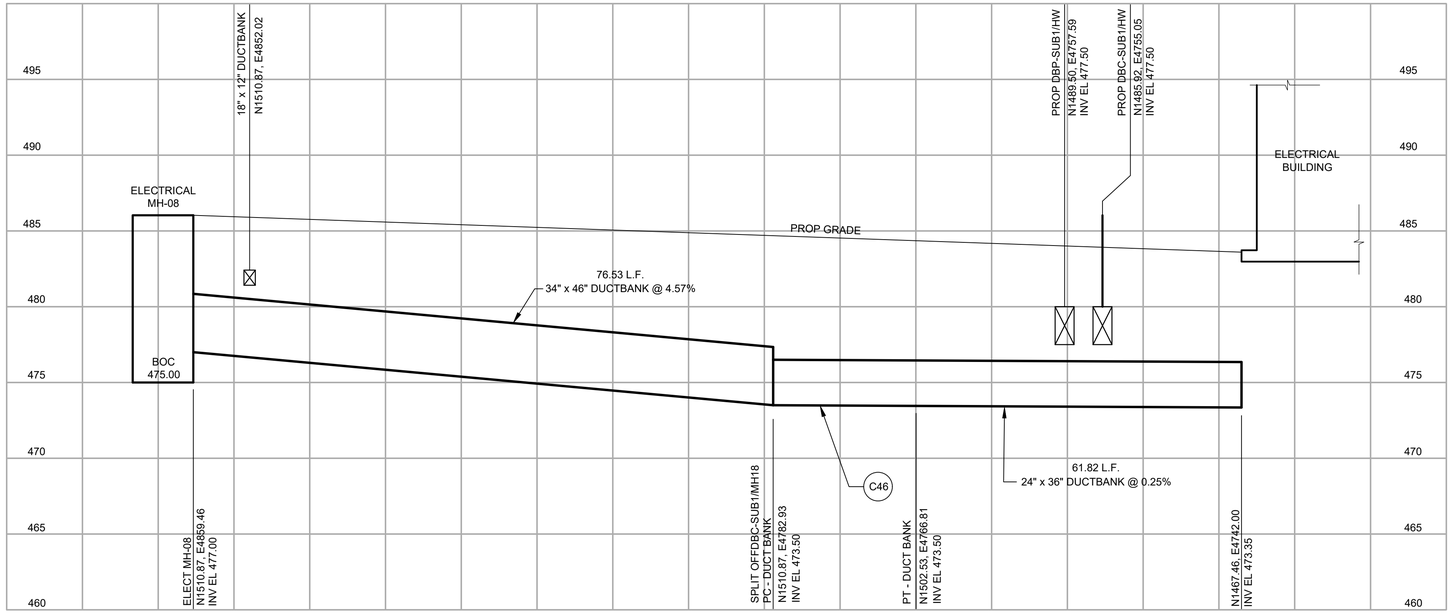

35 02C52 **DBC-SUB1/MH8**

SCALE: 1"=10' HORIZ, 1"= 5' VERTICAL
FILE:

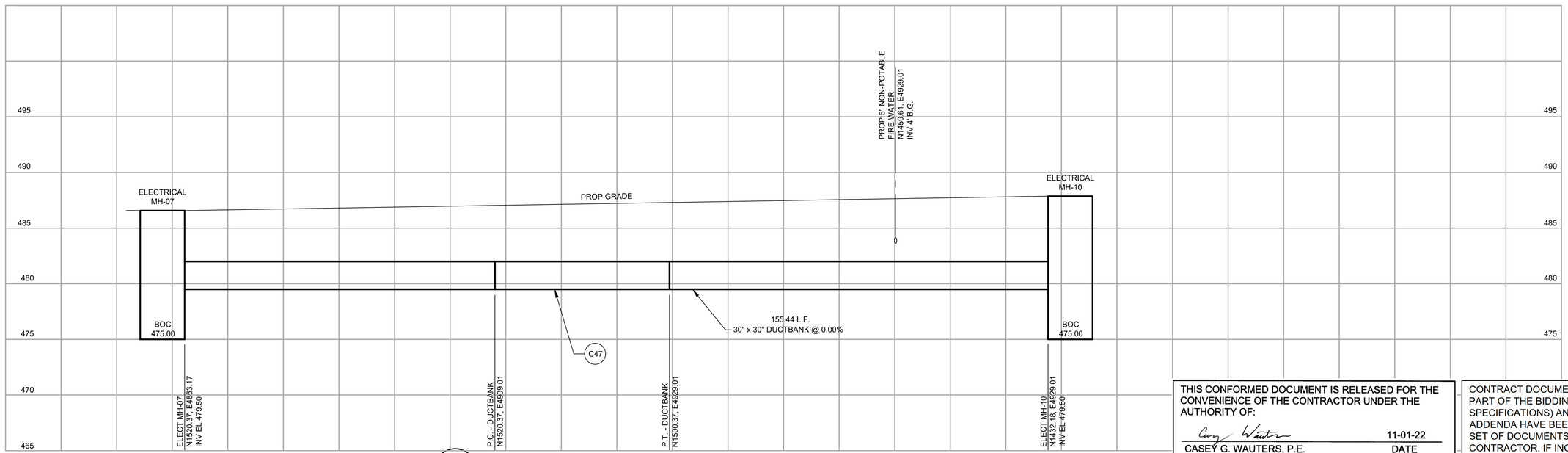

36 02C52 **DBP-MH7/MH10**

SCALE: 1"=10' HORIZ, 1"= 5' VERTICAL
FILE:

NOTES:

1. EXISTING UTILITY INFORMATION SHOWN AS BACKGROUND IN PLAN VIEW, WAS OBTAINED FROM AVAILABLE RECORD DRAWINGS FROM A PREVIOUS PROJECT WHICH MAY NOT BE COMPLETE OR ACCURATE. IT IS INTENDED TO PROVIDE BASIC INFORMATION ON EXISTING FACILITIES. CONTRACTOR IS RESPONSIBLE FOR FIELD VERIFYING THE LOCATION AND ELEVATION OF EXISTING UTILITIES PRIOR TO CONSTRUCTION.
2. PROPOSED DUCTBANKS ON THIS DRAWING ARE SHOWING THE FINAL LAYOUT. REFERENCE ELECTRICAL SITE PLAN AND DEMO FOR CONSTRUCTION PHASING.

LEGEND:

C# CURVE NUMBER

THIS CONFORMED DOCUMENT IS RELEASED FOR THE CONVENIENCE OF THE CONTRACTOR UNDER THE AUTHORITY OF:

CASEY G. WAUTERS, P.E. 11-01-22
TX LIC NO. 93889 DATE

SEE DISCLAIMER FOR LIMITATIONS OF USE.

CONTRACT DOCUMENTS DATED JUNE 10, 2022, AS PART OF THE BIDDING DOCUMENTS (DRAWINGS AND SPECIFICATIONS) AND SUBSEQUENTLY ISSUED ADDENDA HAVE BEEN MERGED INTO ONE CONFORMING SET OF DOCUMENTS FOR THE CONVENIENCE OF THE CONTRACTOR. IF INCONSISTENCIES OR AMBIGUITIES BETWEEN "CONFORMED" DOCUMENTS AND CONTRACT DOCUMENTS ARE FOUND, THE CONTRACT DOCUMENTS SHALL GOVERN.

REV	DATE	BY	DESCRIPTION
			CONFORMED DOCUMENTS

DESIGNED NL/CW
DRAWN AW
CHECKED SGE
DATE MAY 2022

ORIGINAL SEALED BY CASEY G. WAUTERS, P.E. 5/9/2022 TX PE 93889

AECOM TECHNICAL SERVICES INC.
13640 BRIARWICK DRIVE, SUITE 200
AUSTIN, TEXAS 78729
WWW.AECOM.COM
TBPE REG. NO. F-3580

TBPE No. F-882

CITY OF AUSTIN

CITY OF AUSTIN
WILD HORSE RANCH WWTP EXPANSION
CIVIL
ELECTRICAL DUCTBANKS PROFILES
SHEET 7 OF 8

VERIFY SCALES
BAR IS ONE INCH ON ORIGINAL DRAWING
0 1"
IF NOT ONE INCH ON THIS SHEET, ADJUST SCALES ACCORDINGLY

JOB NO. 10976A.10
DRAWING NO. 02C66
SHEET NO. 282 OF 464

LAST SAVED BY: dseivert

PROJECT NO. 9585A10 FILE NAME: 9585A10_SheetSeed.dgn

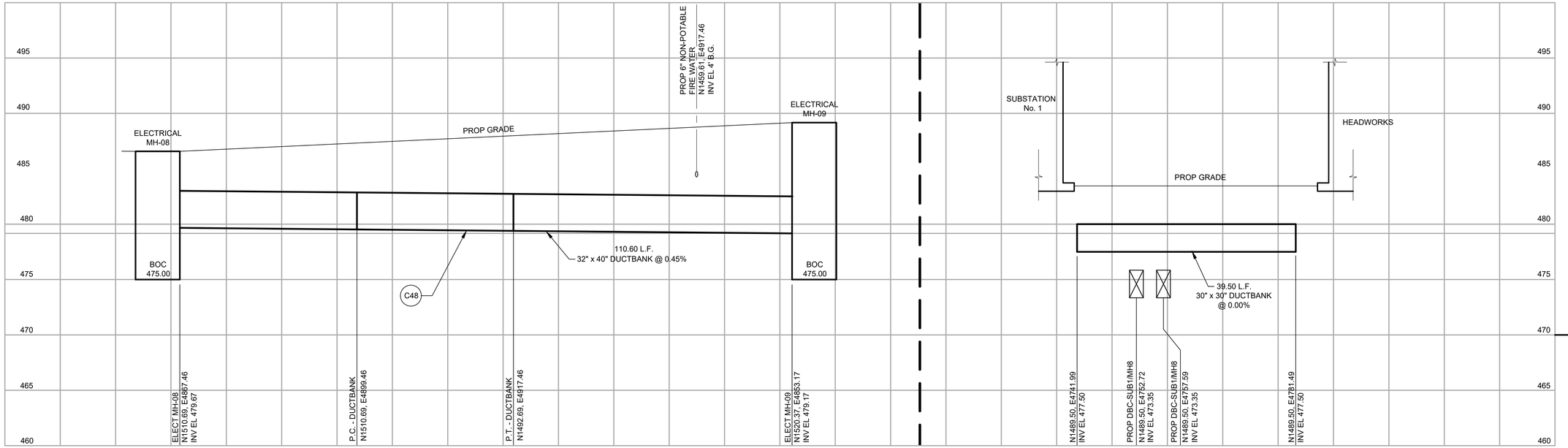

37 02C52 **DBC-MH8/MH9**
SCALE: 1"=10' HORIZ, 1"= 5' VERTICAL
FILE:

38 02C52 **DBP-SUB1/HW**
SCALE: 1"=10' HORIZ, 1"= 5' VERTICAL
FILE:

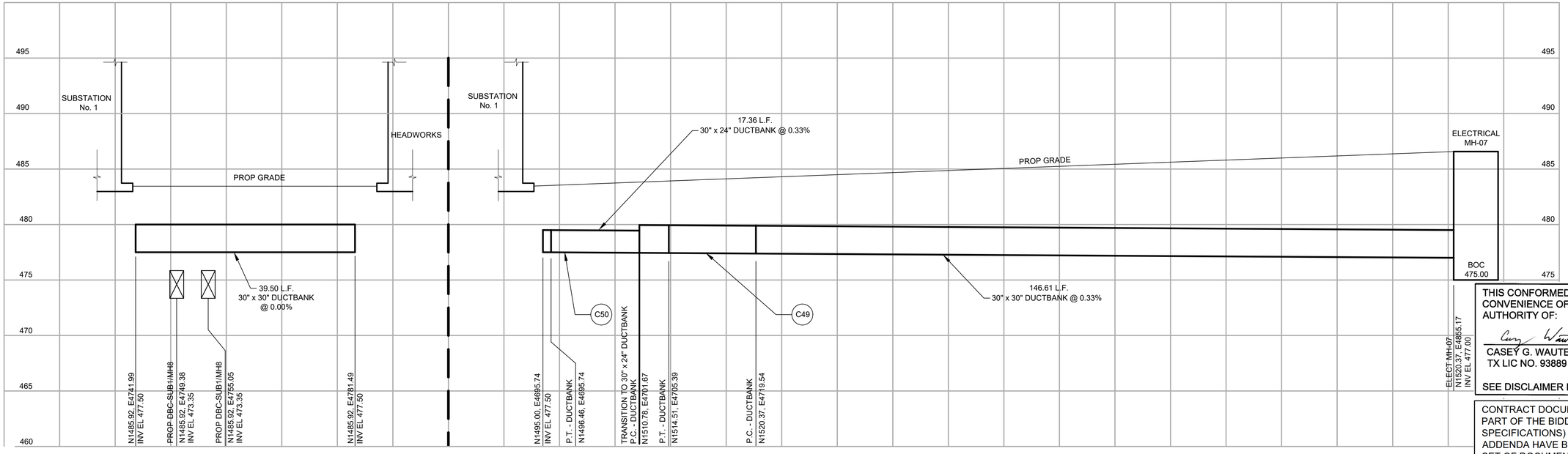

39 02C52 **DBC-SUB1/HW**
SCALE: 1"=10' HORIZ, 1"= 5' VERTICAL
FILE:

40 02C52 **DBP-SUB1/MH7**
SCALE: 1"=10' HORIZ, 1"= 5' VERTICAL
FILE:

NOTES:

1. EXISTING UTILITY INFORMATION SHOWN AS BACKGROUND IN PLAN VIEW, WAS OBTAINED FROM AVAILABLE RECORD DRAWINGS FROM A PREVIOUS PROJECT WHICH MAY NOT BE COMPLETE OR ACCURATE. IT IS INTENDED TO PROVIDE BASIC INFORMATION ON EXISTING FACILITIES. CONTRACTOR IS RESPONSIBLE FOR FIELD VERIFYING THE LOCATION AND ELEVATION OF EXISTING UTILITIES PRIOR TO CONSTRUCTION.
2. PROPOSED DUCTBANKS ON THIS DRAWING ARE SHOWING THE FINAL LAYOUT. REFERENCE ELECTRICAL SITE PLAN AND DEMO FOR CONSTRUCTION PHASING.

LEGEND:

C# CURVE NUMBER

THIS CONFORMED DOCUMENT IS RELEASED FOR THE CONVENIENCE OF THE CONTRACTOR UNDER THE AUTHORITY OF:

CASEY G. WAUTERS, P.E. — 11-01-22
TX LIC NO. 93889 — DATE

SEE DISCLAIMER FOR LIMITATIONS OF USE.

CONTRACT DOCUMENTS DATED JUNE 10, 2022, AS PART OF THE BIDDING DOCUMENTS (DRAWINGS AND SPECIFICATIONS) AND SUBSEQUENTLY ISSUED ADDENDA HAVE BEEN MERGED INTO ONE CONFORMING SET OF DOCUMENTS FOR THE CONVENIENCE OF THE CONTRACTOR. IF INCONSISTENCIES OR AMBIGUITIES BETWEEN "CONFORMED" DOCUMENTS AND CONTRACT DOCUMENTS ARE FOUND, THE CONTRACT DOCUMENTS SHALL GOVERN.

REV	DATE	BY	DESCRIPTION
			CONFORMED DOCUMENTS

DESIGNED NL/CW
DRAWN AW
CHECKED SGE
DATE MAY 2022

**
ORIGINAL
SEALED BY
CASEY G. WAUTERS, P.E.
5/9/2022
TX PE 93889
**

AECOM TECHNICAL SERVICES INC.
13640 BRIARWICK DRIVE, SUITE 200
AUSTIN, TEXAS 78729
WWW.AECOM.COM
TBPE REG. NO. F-3580

TBPE No. F-882

CITY OF AUSTIN

CITY OF AUSTIN
WILD HORSE RANCH WWTP EXPANSION
CIVIL
ELECTRICAL DUCTBANKS PROFILES
SHEET 8 OF 8

VERIFY SCALES
BAR IS ONE INCH ON ORIGINAL DRAWING
0 — 1"
IF NOT ONE INCH ON THIS SHEET, ADJUST SCALES ACCORDINGLY

JOB NO. 10976A.10
DRAWING NO. 02C67
SHEET NO. 283 OF 464

LAST SAVED BY: dselvert

PROJECT NO. 9585A10 FILE NAME: 9585A10_SheetSeed.dgn

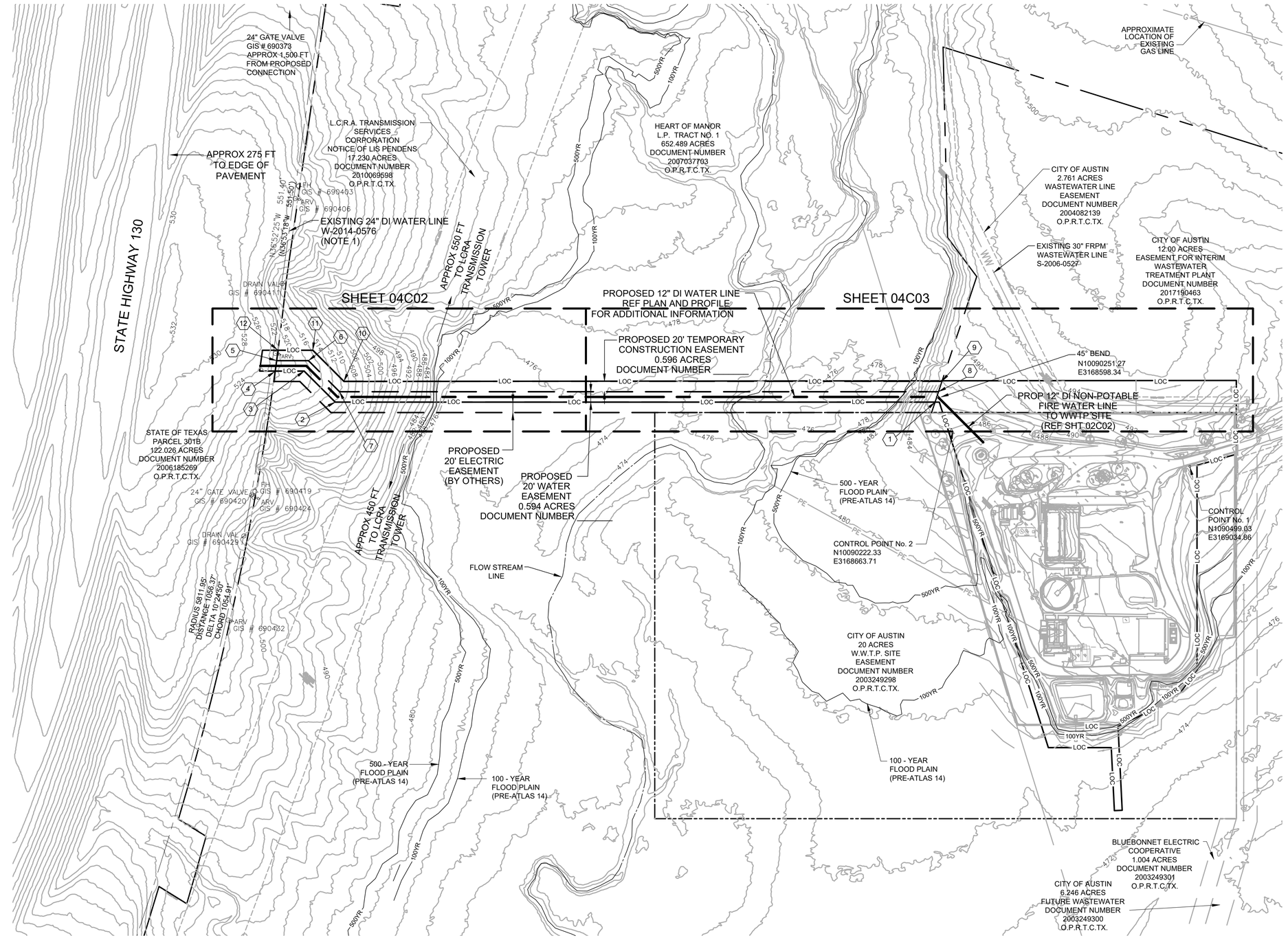

45°00'05"
NORTH
NORTH
TRUE
PLANT

SCALE: 1" = 100'

LEGEND

- EXISTING
- PROPERTY BOUNDARY
- EASEMENTS
- LOC — LIMITS OF CONSTRUCTION
- 100YR — 100 YEAR FLOOD PLAIN
- 500YR — 500 YEAR FLOOD PLAIN
- STREAM CL

NOTES:

1. EXISTING UTILITY INFORMATION, SHOWN AS BACKGROUND IN THE PLAN, WAS OBTAINED FROM AVAILABLE RECORD DRAWINGS FROM A PREVIOUS PROJECT WHICH MAY NOT BE COMPLETE OR ACCURATE. IT IS INTENDED TO PROVIDE BASIC INFORMATION ON EXISTING UTILITIES. CONTRACTOR IS RESPONSIBLE FOR FIELD VERIFYING THE LOCATION AND ELEVATION OF EXISTING UTILITIES PRIOR TO CONSTRUCTION.
2. ACTUAL FIELD CONDITIONS MAY BE DIFFERENT FROM THOSE SHOWN IN THIS DRAWING. CONTRACTOR TO FIELD VERIFY INSTALLED CONDITIONS IMPACTED BY OR IMPACTING THIS WORK PRIOR TO INITIATING THE WORK.
3. PROJECT WORK IS LOCATED WITHIN EASEMENTS AND RIGHT OF WAY. EASEMENTS ACQUIRED FOR THIS PROJECT ARE SHOWN ON THE PLANS FOR INFORMATION ONLY. CONTRACTOR SHALL REFERENCE FORMALLY RECORDED EASEMENTS FOR EXACT LOCATION.

EASEMENTS COORDINATE TABLE			
1	N10090240.37 E3168601.59	7	N10089445.97 E3167778.93
2	N10089425.97 E3167787.22	8	N10090259.21 E3168592.13
3	N10089425.97 E3167702.80	9	N10090278.04 E3168582.68
4	N10089386.73 E3167663.56	10	N10089465.97 E3167770.65
5	N10089402.80 E3167651.34	11	N10089465.97 E3167686.23
6	N10089445.97 E3167694.51	12	N10089418.81 E3167639.07

THIS CONFORMED DOCUMENT IS RELEASED FOR THE CONVENIENCE OF THE CONTRACTOR UNDER THE AUTHORITY OF:

CASEY G. WAUTERS, P.E.
TX LIC NO. 93889

11-01-22
DATE

SEE DISCLAIMER FOR LIMITATIONS OF USE.

CONTRACT DOCUMENTS DATED JUNE 10, 2022, AS PART OF THE BIDDING DOCUMENTS (DRAWINGS AND SPECIFICATIONS) AND SUBSEQUENTLY ISSUED ADDENDA HAVE BEEN MERGED INTO ONE CONFORMING SET OF DOCUMENTS FOR THE CONVENIENCE OF THE CONTRACTOR. IF INCONSISTENCIES OR AMBIGUITIES BETWEEN "CONFORMED" DOCUMENTS AND CONTRACT DOCUMENTS ARE FOUND, THE CONTRACT DOCUMENTS SHALL GOVERN.

REV	DATE	BY	DESCRIPTION
			CONFORMED DOCUMENTS

DESIGNED AS/NL
DRAWN AW
CHECKED SGE
DATE MAY 2022

**
ORIGINAL
SEALED BY
CASEY G. WAUTERS, P.E.
5/9/2022
TX PE 93889
**

AECOM TECHNICAL SERVICES INC.
13640 BRIARWICK DRIVE, SUITE 200
AUSTIN, TEXAS 78729
WWW.AECOM.COM
TBPE REG. NO. F-3580

TBPE No. F-882

CITY OF AUSTIN

CITY OF AUSTIN
WILD HORSE RANCH WWTP EXPANSION
CIVIL
OVERALL POTABLE WATER PIPELINE LAYOUT

VERIFY SCALES
BAR IS ONE INCH ON ORIGINAL DRAWING
0 — 1"
IF NOT ONE INCH ON THIS SHEET, ADJUST SCALES ACCORDINGLY

JOB NO. 10976A.10
DRAWING NO. 04C01
SHEET NO. 284 OF 464

LAST SAVED BY: dseivert

PROJECT NO. 9585A10 FILE NAME: 9585A10_SheetSeed.dgn

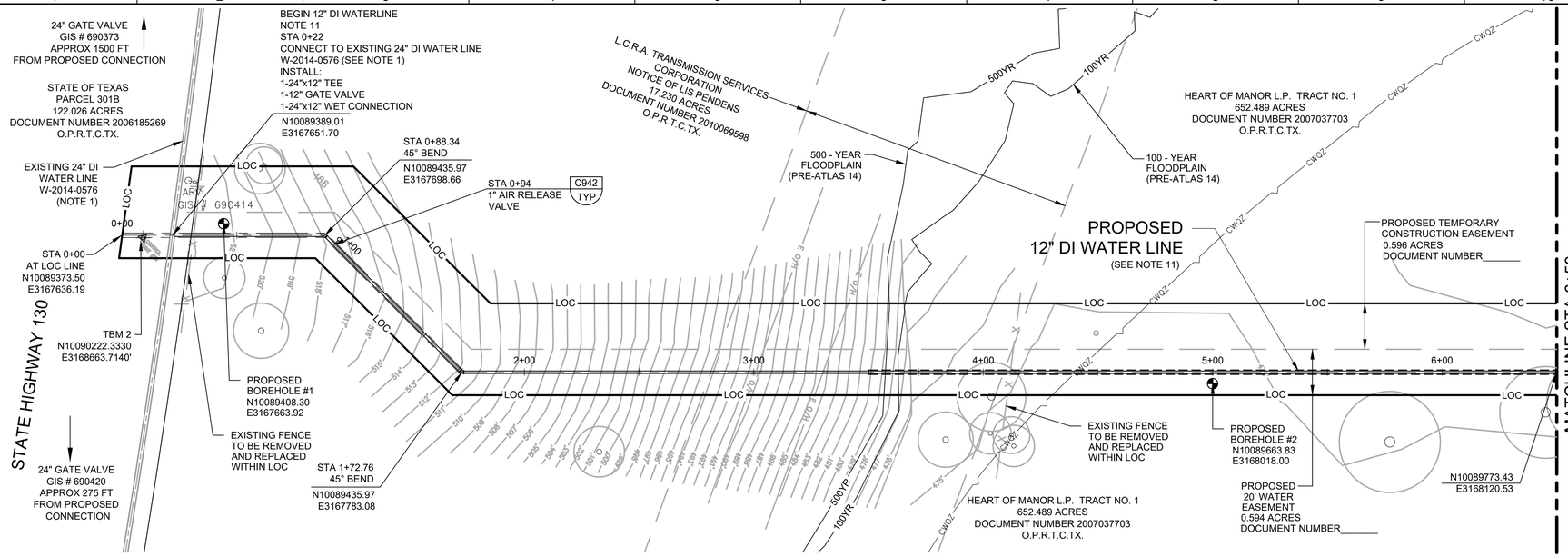

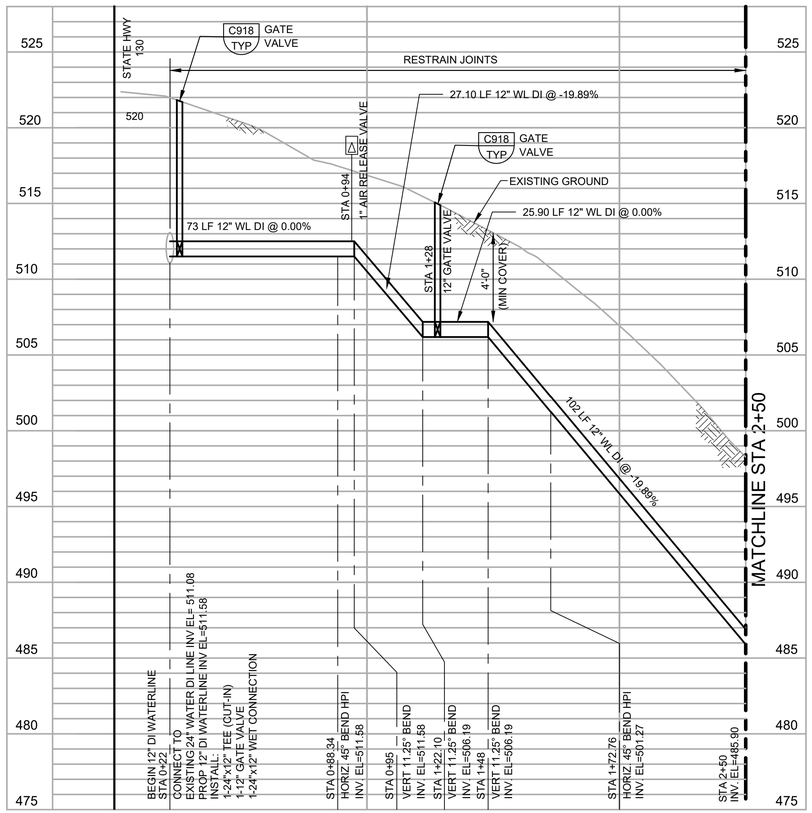

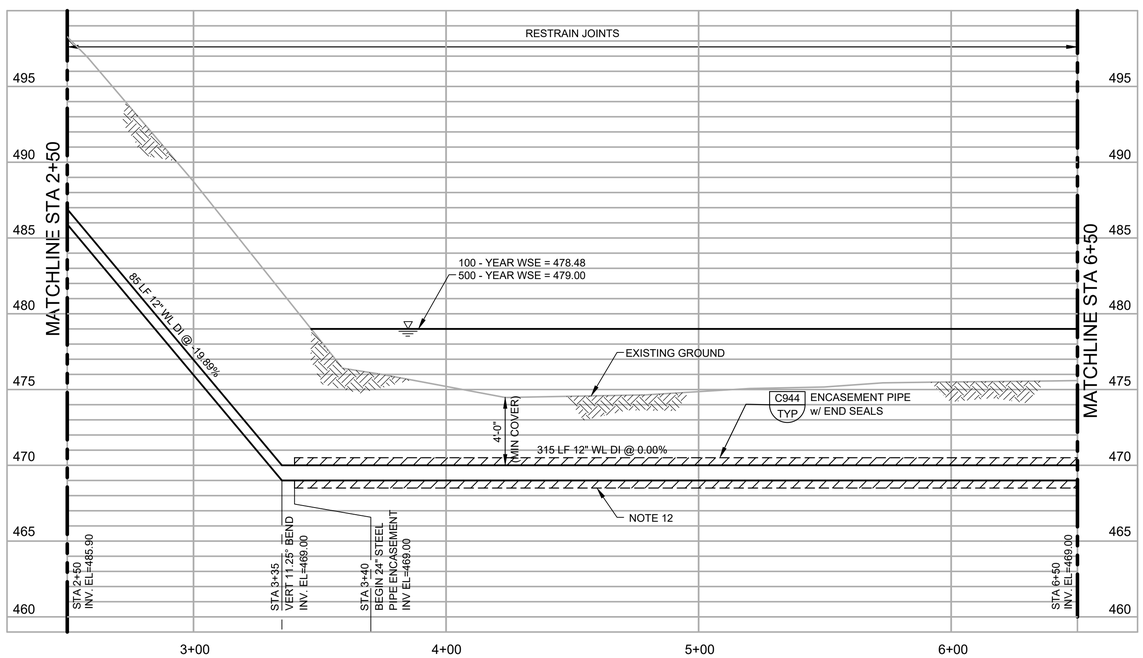

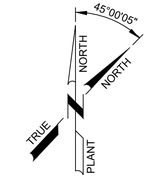

SCALE: 1" = 30' HORIZ.
1" = 5' VERT.

LEGEND

- EASEMENTS
- 100YR — 100 YEAR FLOODPLAIN
- 500YR — 500 YEAR FLOODPLAIN
- CL FLOW STREAM
- CWQZ — CRITICAL WATER QUALITY ZONE
- WQTZ — WATER QUALITY TRANSITION ZONE

NOTES:

1. THE LOCATION OF EXISTING UTILITIES SHOWN ON THIS DRAWING IS FROM AVAILABLE RECORD INFORMATION WHICH MAY NOT BE COMPLETE OR ACCURATE. CONTRACTOR IS RESPONSIBLE FOR FIELD VERIFYING THE LOCATION AND ELEVATION OF EXISTING UTILITIES PRIOR TO CONSTRUCTION. SEE DRAWINGS 04C10 - 04C12 FOR RECORD INFORMATION. CONTRACTOR SHALL COORDINATE WITH AUSTIN WATER TO CLOSE EXISTING VALVES TO ISOLATE WATER LINE TO BE REPLACED.
2. ACTUAL FIELD CONDITIONS MAY BE DIFFERENT FROM THOSE SHOWN IN THIS DRAWING. CONTRACTOR TO FIELD VERIFY INSTALLED CONDITIONS IMPACTING OR IMPACTED BY THIS WORK PRIOR TO INITIATING WORK.
3. PROJECT WORK IS LOCATED WITHIN EASEMENTS AND RIGHT OF WAY. EASEMENTS ACQUIRED FOR THIS PROJECT ARE SHOWN ON THE PLANS FOR INFORMATION ONLY. CONTRACTOR SHALL REFERENCE FORMALLY RECORDED EASEMENTS FOR EXACT LOCATIONS.
4. PLANS INDICATE ANTICIPATED FITTINGS BASED ON PIPE ALIGNMENT. ADDITIONAL FITTINGS ARE ANTICIPATED TO BE REQUIRED BASED ON VERTICAL SLOPE ADJUSTMENT AND FIELD CONDITIONS. CONTRACTOR SHALL PERFORM FIELD INVESTIGATIONS INCLUDING POTHOLING AT LEAST 500 FT IN ADVANCE OF WORK ZONE AS WORK PROGRESSES, TO CONFIRM ADDITIONAL REQUIRED FITTINGS AND/OR JOINT RESTRAINTS BASED ON SLOPE CHANGES AND FIELD CONDITIONS.
5. COORDINATE WITH OWNER'S REPRESENTATIVE TO OBTAIN G.P.S. DOCUMENTATION OF FINAL INSTALLED FITTING LOCATIONS IN STATE PLANE COORDINATES PRIOR TO BACKFILL.
6. MINIMUM DEPTH OF COVER ABOVE PIPE CROWN TO BE NOT LESS THAN 4 FEET UNLESS NOTED OTHERWISE. CONTACT ENGINEER FOR ADVANCE APPROVAL IN ALL CASES WHERE VARIANCE IS PROPOSED BASED ON FIELD CONDITIONS.
7. VERTICAL OR HORIZONTAL JOINT DEFLECTION SHALL BE ACCOMPLISHED USING DUCTILE IRON MECHANICAL JOINT SOLID SLEEVE COUPLINGS WITH RESTRAINT GLANDS. RESTRAINED FITTING JOINTS SHALL ALSO NOT EXCEED ALLOWABLE DEFLECTION OF RESTRAINT HARNESS. INCREASE PIPE DEPTH OF COVER AND/OR FURNISH AND INSTALL ADDITIONAL FITTINGS AND JOINT RESTRAINT BEYOND THOSE INDICATED IN PLANS, AS REQUIRED BASED ON ACTUAL INSTALLED CONDITIONS.
8. BURIED FITTINGS SHALL BE DUCTILE IRON MECHANICAL JOINT FITTINGS IN ACCORDANCE WITH AWWA C-153, WITH FACTORY INSTALLED CEMENT MORTAR LINING PER AWWA C104. MINIMUM RATED WORKING PRESSURE SHALL BE NOT LESS THAN 250 PSI.
9. ALL DI PIPE CONNECTIONS TO FITTINGS SHALL BE INSTALLED WITH WEDGE ACTION TYPE MECHANICAL JOINT RESTRAINT SYSTEM (COA SPL No. WW-27A) RATED FOR FULL WORKING PRESSURE RATING OF THE PIPE.
10. JOINT RESTRAINT HARNESS FOR DI PIPE BELL AND SPIGOT JOINTS SHALL BE AS SPECIFIED IN COA SPL No. WW-27A AND RATED FOR FULL WORKING PRESSURE RATING OF THE PIPE.
11. ALL DUCTILE IRON PIPE WITHIN UTILITY EASEMENT LOCATED ON PRIVATE PROPERTY SHALL BE DOUBLE WRAPPED IN POLYETHYLENE FILM WRAP.
12. 24" MIN DIA STEEL ENCASEMENT PIPE, 1/2" WALL THICKNESS, WITH END SEALS PER COA SPL WW-575A.

THIS CONFORMED DOCUMENT IS RELEASED FOR THE CONVENIENCE OF THE CONTRACTOR UNDER THE AUTHORITY OF:

CASEY G. WAUTERS, P.E.
TX LIC NO. 93889

11-01-22
DATE

SEE DISCLAIMER FOR LIMITATIONS OF USE.

CONTRACT DOCUMENTS DATED JUNE 10, 2022, AS PART OF THE BIDDING DOCUMENTS (DRAWINGS AND SPECIFICATIONS) AND SUBSEQUENTLY ISSUED ADDENDA HAVE BEEN MERGED INTO ONE CONFORMING SET OF DOCUMENTS FOR THE CONVENIENCE OF THE CONTRACTOR. IF INCONSISTENCIES OR AMBIGUITIES BETWEEN "CONFORMED" DOCUMENTS AND CONTRACT DOCUMENTS ARE FOUND, THE CONTRACT DOCUMENTS SHALL GOVERN.

REV	DATE	BY	DESCRIPTION
			CONFORMED DOCUMENTS

DESIGNED AS/NL
DRAWN AW
CHECKED SGE
DATE FEBRUARY 2022

** ORIGINAL SEALED BY CASEY G. WAUTERS, P.E. 2/28/2022 TX PE 93889 **

AECOM TECHNICAL SERVICES INC.
13640 BRIARWICK DRIVE, SUITE 200
AUSTIN, TEXAS 78729
WWW.AECOM.COM
TBPE REG. NO. F-3580

carollo
TBPE No. F-882

CITY OF AUSTIN

CITY OF AUSTIN
WILD HORSE RANCH WWTP EXPANSION
CIVIL
POTABLE WATER LINE
PLAN AND PROFILE STA 0+00 TO STA 6+50

VERIFY SCALES
BAR IS ONE INCH ON ORIGINAL DRAWING
0 1"
IF NOT ONE INCH ON THIS SHEET, ADJUST SCALES ACCORDINGLY

JOB NO. 10976A.10
DRAWING NO. 04C02
SHEET NO. 285 OF 464

LAST SAVED BY: dseivert

PROJECT NO. 9585A10 FILE NAME: 9585A10_SheetSeed.dgn

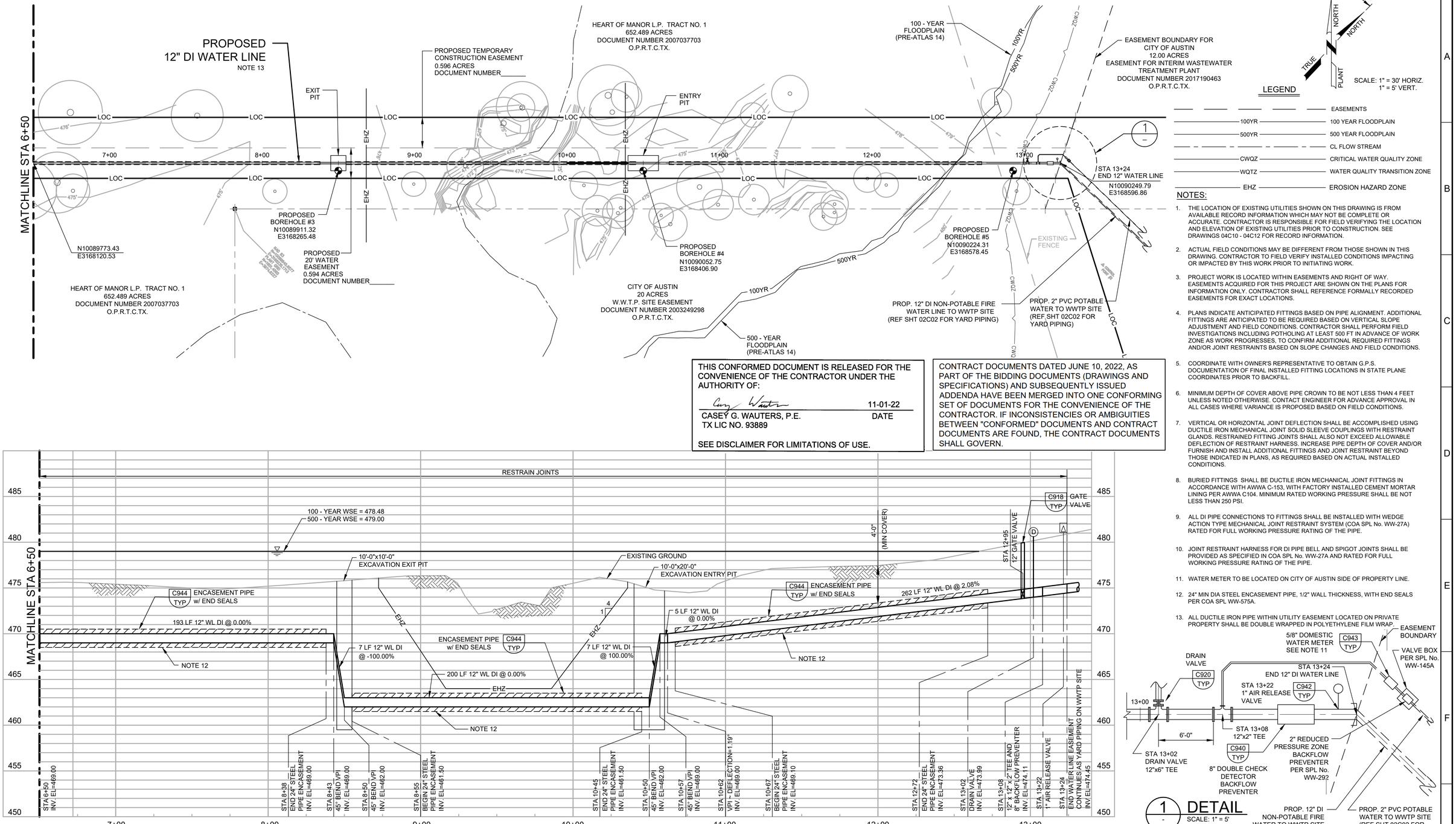

THIS CONFORMED DOCUMENT IS RELEASED FOR THE CONVENIENCE OF THE CONTRACTOR UNDER THE AUTHORITY OF:

CASEY G. WAUTERS, P.E.
TX LIC NO. 93889

11-01-22
DATE

SEE DISCLAIMER FOR LIMITATIONS OF USE.

CONTRACT DOCUMENTS DATED JUNE 10, 2022, AS PART OF THE BIDDING DOCUMENTS (DRAWINGS AND SPECIFICATIONS) AND SUBSEQUENTLY ISSUED ADDENDA HAVE BEEN MERGED INTO ONE CONFORMING SET OF DOCUMENTS FOR THE CONVENIENCE OF THE CONTRACTOR. IF INCONSISTENCIES OR AMBIGUITIES BETWEEN "CONFORMED" DOCUMENTS AND CONTRACT DOCUMENTS ARE FOUND, THE CONTRACT DOCUMENTS SHALL GOVERN.

1 - DETAIL
SCALE: 1" = 5'

NOTES:

1. THE LOCATION OF EXISTING UTILITIES SHOWN ON THIS DRAWING IS FROM AVAILABLE RECORD INFORMATION WHICH MAY NOT BE COMPLETE OR ACCURATE. CONTRACTOR IS RESPONSIBLE FOR FIELD VERIFYING THE LOCATION AND ELEVATION OF EXISTING UTILITIES PRIOR TO CONSTRUCTION. SEE DRAWINGS 04C10 - 04C12 FOR RECORD INFORMATION.
2. ACTUAL FIELD CONDITIONS MAY BE DIFFERENT FROM THOSE SHOWN IN THIS DRAWING. CONTRACTOR TO FIELD VERIFY INSTALLED CONDITIONS IMPACTING OR IMPACTED BY THIS WORK PRIOR TO INITIATING WORK.
3. PROJECT WORK IS LOCATED WITHIN EASEMENTS AND RIGHT OF WAY. EASEMENTS ACQUIRED FOR THIS PROJECT ARE SHOWN ON THE PLANS FOR INFORMATION ONLY. CONTRACTOR SHALL REFERENCE FORMALLY RECORDED EASEMENTS FOR EXACT LOCATIONS.
4. PLANS INDICATE ANTICIPATED FITTINGS BASED ON PIPE ALIGNMENT. ADDITIONAL FITTINGS ARE ANTICIPATED TO BE REQUIRED BASED ON VERTICAL SLOPE ADJUSTMENT AND FIELD CONDITIONS. CONTRACTOR SHALL PERFORM FIELD INVESTIGATIONS INCLUDING POTHOLING AT LEAST 500 FT IN ADVANCE OF WORK ZONE AS WORK PROGRESSES, TO CONFIRM ADDITIONAL REQUIRED FITTINGS AND/OR JOINT RESTRAINTS BASED ON SLOPE CHANGES AND FIELD CONDITIONS.
5. COORDINATE WITH OWNER'S REPRESENTATIVE TO OBTAIN G.P.S. DOCUMENTATION OF FINAL INSTALLED FITTING LOCATIONS IN STATE PLANE COORDINATES PRIOR TO BACKFILL.
6. MINIMUM DEPTH OF COVER ABOVE PIPE CROWN TO BE NOT LESS THAN 4 FEET UNLESS NOTED OTHERWISE. CONTACT ENGINEER FOR ADVANCE APPROVAL IN ALL CASES WHERE VARIANCE IS PROPOSED BASED ON FIELD CONDITIONS.
7. VERTICAL OR HORIZONTAL JOINT DEFLECTION SHALL BE ACCOMPLISHED USING DUCTILE IRON MECHANICAL JOINT SOLID SLEEVE COUPLINGS WITH RESTRAINT GLANDS. RESTRAINED FITTING JOINTS SHALL ALSO NOT EXCEED ALLOWABLE DEFLECTION OF RESTRAINT HARNESS. INCREASE PIPE DEPTH OF COVER AND/OR FURNISH AND INSTALL ADDITIONAL FITTINGS AND JOINT RESTRAINT BEYOND THOSE INDICATED IN PLANS, AS REQUIRED BASED ON ACTUAL INSTALLED CONDITIONS.
8. BURIED FITTINGS SHALL BE DUCTILE IRON MECHANICAL JOINT FITTINGS IN ACCORDANCE WITH AWWA C-153, WITH FACTORY INSTALLED CEMENT MORTAR LINING PER AWWA C104. MINIMUM RATED WORKING PRESSURE SHALL BE NOT LESS THAN 250 PSI.
9. ALL DI PIPE CONNECTIONS TO FITTINGS SHALL BE INSTALLED WITH WEDGE ACTION TYPE MECHANICAL JOINT RESTRAINT SYSTEM (COA SPL No. WW-27A) RATED FOR FULL WORKING PRESSURE RATING OF THE PIPE.
10. JOINT RESTRAINT HARNESS FOR DI PIPE BELL AND SPIGOT JOINTS SHALL BE PROVIDED AS SPECIFIED IN COA SPL No. WW-27A AND RATED FOR FULL WORKING PRESSURE RATING OF THE PIPE.
11. WATER METER TO BE LOCATED ON CITY OF AUSTIN SIDE OF PROPERTY LINE.
12. 24" MIN DIA STEEL ENCASEMENT PIPE, 1/2" WALL THICKNESS, WITH END SEALS PER COA SPL WW-575A.
13. ALL DUCTILE IRON PIPE WITHIN UTILITY EASEMENT LOCATED ON PRIVATE PROPERTY SHALL BE DOUBLE WRAPPED IN POLYETHYLENE FILM WRAP.

REV	DATE	BY	DESCRIPTION
			CONFORMED DOCUMENTS

DESIGNED AS/NL
DRAWN AW
CHECKED SGE
DATE MAY 2022

** ORIGINAL SEALED BY CASEY G. WAUTERS, P.E. 5/9/2022 TX PE 93889 **

AECOM TECHNICAL SERVICES INC.
13640 BRIARWICK DRIVE, SUITE 200
AUSTIN, TEXAS 78729
WWW.AECOM.COM
TBPE REG. NO. F-3580

carollo
TBPE No. F-882

CITY OF AUSTIN
FOUNDED 1839
CITY OF AUSTIN

CITY OF AUSTIN
WILD HORSE RANCH WWTP EXPANSION
CIVIL
POTABLE WATER LINE
PLAN AND PROFILE STA 6+50 TO STA 13+24

VERIFY SCALES
BAR IS ONE INCH ON ORIGINAL DRAWING
0 1"
IF NOT ONE INCH ON THIS SHEET, ADJUST SCALES ACCORDINGLY

JOB NO. 10976A.10
DRAWING NO. 04C03
SHEET NO. 286 OF 464

LAST SAVED BY: dseivert

PROJECT NO. 9585A10 FILE NAME: 9585A10_SheetSeed.dgn

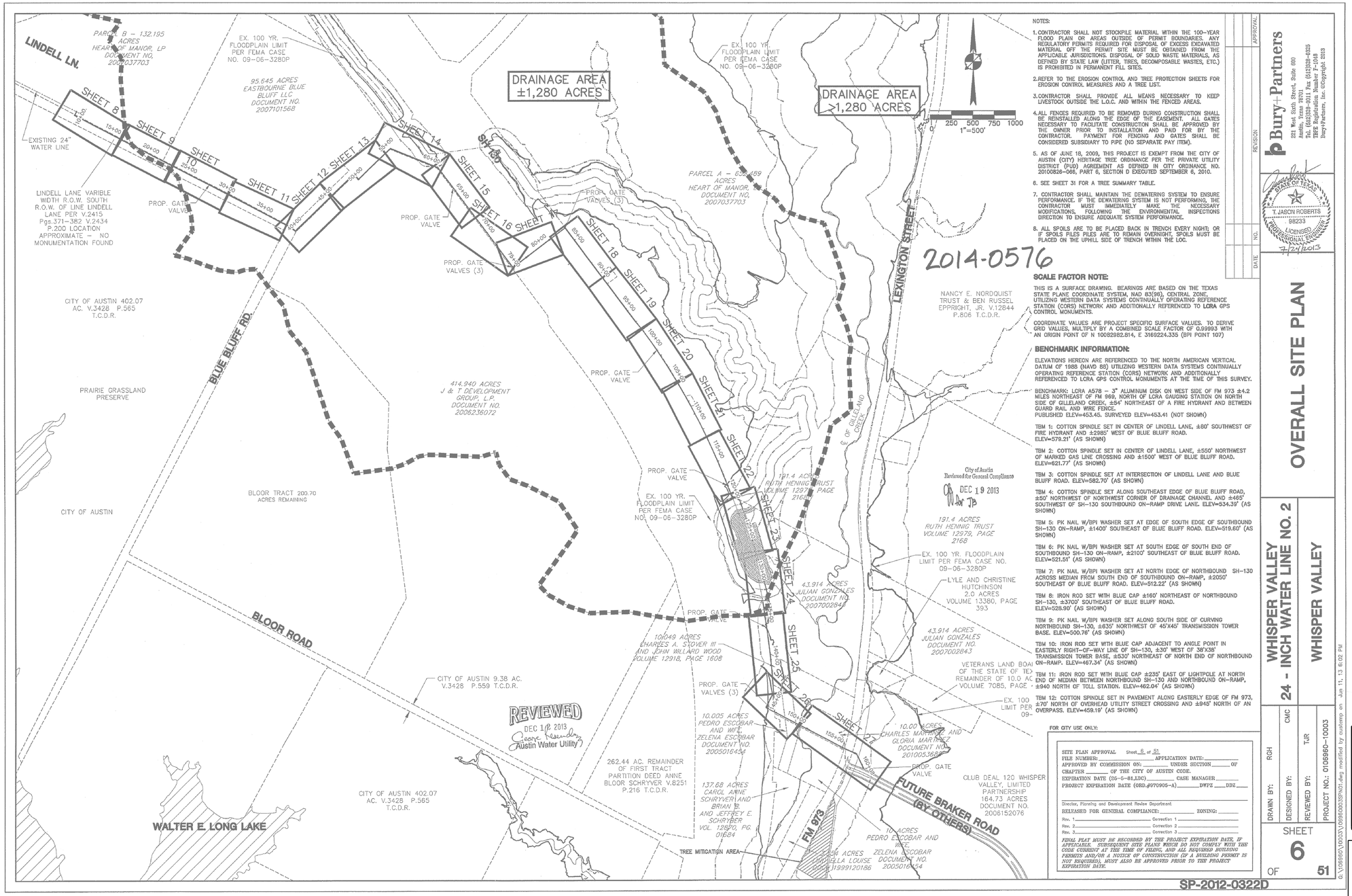

NOTES:

1. CONTRACTOR SHALL NOT STOCKPILE MATERIAL WITHIN THE 100-YEAR FLOOD PLAIN OR AREAS OUTSIDE OF PERMIT BOUNDARIES. ANY REGULATORY PERMITS REQUIRED FOR DISPOSAL OF EXCESS EXCAVATED MATERIAL OFF THE PERMIT SITE MUST BE OBTAINED FROM THE APPLICABLE JURISDICTIONS. DISPOSAL OF SOLID WASTE MATERIALS, AS DEFINED BY STATE LAW (LITTER, TIRES, INCOMPOSABLE WASTES, ETC.) IS PROHIBITED IN PERMANENT FILL SITES.
2. REFER TO THE EROSION CONTROL AND TREE PROTECTION SHEETS FOR EROSION CONTROL MEASURES AND A TREE LIST.
3. CONTRACTOR SHALL PROVIDE ALL MEANS NECESSARY TO KEEP LIVESTOCK OUTSIDE THE L.O.C. AND WITHIN THE FENCED AREAS.
4. ALL FENCES REQUIRED TO BE REMOVED DURING CONSTRUCTION SHALL BE REINSTALLED ALONG THE EDGE OF THE EASEMENT. ALL GATES NECESSARY TO FACILITATE CONSTRUCTION SHALL BE APPROVED BY THE OWNER PRIOR TO INSTALLATION AND PAID FOR BY THE CONTRACTOR. PAYMENT FOR FENCING AND GATES SHALL BE CONSIDERED SUBSIDIARY TO PIPE (NO SEPARATE PAY ITEM).
5. AS OF JUNE 18, 2009, THIS PROJECT IS EXEMPT FROM THE CITY OF AUSTIN (CITY) HERITAGE TREE ORDINANCE PER THE PRIVATE UTILITY DISTRICT (PUD) AGREEMENT AS DEFINED IN CITY ORDINANCE NO. 20100826-086, PART 6, SECTION D EXECUTED SEPTEMBER 6, 2010.
6. SEE SHEET 31 FOR A TREE SUMMARY TABLE.
7. CONTRACTOR SHALL MAINTAIN THE DEWATERING SYSTEM TO ENSURE PERFORMANCE. IF THE DEWATERING SYSTEM IS NOT PERFORMING, THE CONTRACTOR MUST IMMEDIATELY MAKE THE NECESSARY MODIFICATIONS. FOLLOWING THE ENVIRONMENTAL INSPECTIONS DIRECTION TO ENSURE ADEQUATE SYSTEM PERFORMANCE.
8. ALL SPOILS ARE TO BE PLACED BACK IN TRENCH EVERY NIGHT; OR IF SPOILS PILES PILES ARE TO REMAIN OVERNIGHT, SPOILS MUST BE PLACED ON THE UPHILL SIDE OF TRENCH WITHIN THE LOC.

2014-0576

SCALE FACTOR NOTE:

THIS IS A SURFACE DRAWING. BEARINGS ARE BASED ON THE TEXAS STATE PLANE COORDINATE SYSTEM, NAD 83(96), CENTRAL ZONE, UTILIZING WESTERN DATA SYSTEMS CONTINUALLY OPERATING REFERENCE STATION (CORS) NETWORK AND ADDITIONALLY REFERENCED TO **LCRA** GPS CONTROL MONUMENTS.

COORDINATE VALUES ARE PROJECT SPECIFIC SURFACE VALUES. TO DERIVE GRID VALUES, MULTIPLY BY A COMBINED SCALE FACTOR OF 0.99993 WITH AN ORIGIN POINT OF N 10082982.814, E 3169224.335 (BPI POINT 107)

BENCHMARK INFORMATION:

ELEVATIONS HEREON ARE REFERENCED TO THE NORTH AMERICAN VERTICAL DATUM OF 1988 (NAVD 88) UTILIZING WESTERN DATA SYSTEMS CONTINUALLY OPERATING REFERENCE STATION (CORS) NETWORK AND ADDITIONALLY REFERENCED TO LCRA GPS CONTROL MONUMENTS AT THE TIME OF THIS SURVEY.

BENCHMARK: LCRA A578 – 3" ALUMINUM DISK ON WEST SIDE OF FM 973 ±4.2 MILES NORTHEAST OF FM 969, NORTH OF LCRA GAUGING STATION ON NORTH SIDE OF GILELAND CREEK. ±54' NORTHEAST OF A FIRE HYDRANT AND BETWEEN GUARD RAIL AND WIRE FENCE.
PUBLISHED ELEV=453.45. SURVEYED ELEV=453.41 (NOT SHOWN)

TBM 1: COTTON SPINDLE SET IN CENTER OF LINDELL LANE, ±80' SOUTHWEST OF FIRE HYDRANT AND ±2985' WEST OF BLUE BLUFF ROAD.
ELEV=579.21' (AS SHOWN)

TBM 2: COTTON SPINDLE SET IN CENTER OF LINDELL LANE, ±550' NORTHWEST OF MARKED GAS LINE CROSSING AND ±1500' WEST OF BLUE BLUFF ROAD.
ELEV=621.77' (AS SHOWN)

TBM 3: COTTON SPINDLE SET AT INTERSECTION OF LINDELL LANE AND BLUE BLUFF ROAD. ELEV=582.70' (AS SHOWN)

TBM 4: COTTON SPINDLE SET ALONG SOUTHEAST EDGE OF BLUE BLUFF ROAD, ±50' NORTHWEST OF NORTHWEST CORNER OF DRAINAGE CHANNEL AND ±465' SOUTHWEST OF SH-130 SOUTHBOUND ON-RAMP DRIVE LANE. ELEV=534.39' (AS SHOWN)

TBM 5: PK NAIL W/BPI WASHER SET AT EDGE OF SOUTH EDGE OF SOUTHBOUND SH-130 ON-RAMP, ±1400' SOUTHEAST OF BLUE BLUFF ROAD. ELEV=519.60' (AS SHOWN)

TBM 6: PK NAIL W/BPI WASHER SET AT SOUTH EDGE OF SOUTH END OF SOUTHBOUND SH-130 ON-RAMP, ±2100' SOUTHEAST OF BLUE BLUFF ROAD. ELEV=521.51' (AS SHOWN)

TBM 7: PK NAIL W/BPI WASHER SET AT NORTH EDGE OF NORTHBOUND SH-130 ACROSS MEDIAN FROM SOUTH END OF SOUTHBOUND ON-RAMP, ±2050' SOUTHEAST OF BLUE BLUFF ROAD. ELEV=512.22' (AS SHOWN)

TBM 8: IRON ROD SET WITH BLUE CAP ±160' NORTHEAST OF NORTHBOUND SH-130, ±3700' SOUTHEAST OF BLUE BLUFF ROAD.
ELEV=528.90' (AS SHOWN)

TBM 9: PK NAIL W/BPI WASHER SET ALONG SOUTH SIDE OF CURVING NORTHBOUND SH-130, ±635' NORTHWEST OF 45'X45' TRANSMISSION TOWER BASE. ELEV=500.76' (AS SHOWN)

TBM 10: IRON ROD SET WITH BLUE CAP ADJACENT TO ANGLE POINT IN EASTERLY RIGHT-OF-WAY LINE OF SH-130, ±30' WEST OF 38'X38' TRANSMISSION TOWER BASE, ±530' NORTHEAST OF NORTH END OF NORTHBOUND ON-RAMP. ELEV=467.34' (AS SHOWN)

TBM 11: IRON ROD SET WITH BLUE CAP ±235' EAST OF LIGHTPOLE AT NORTH END OF MEDIAN BETWEEN NORTHBOUND SH-130 AND NORTHBOUND ON-RAMP, ±940 NORTH OF TOLL STATION. ELEV=462.04' (AS SHOWN)

TBM 12: COTTON SPINDLE SET IN PAVEMENT ALONG EASTERLY EDGE OF FM 973, ±70' NORTH OF OVERHEAD UTILITY STREET CROSSING AND ±945' NORTH OF AN OVERPASS. ELEV=459.19' (AS SHOWN)

City of Austin Reviewed for General Compliance DEC 19 2013

191.4 ACRES RUTH HENNIG TRUST VOLUME 12979, PAGE 2168

FOR CITY USE ONLY:

SITE PLAN APPROVAL Sheet 6 of 51
FILE NUMBER:_____ APPLICATION DATE:_____
APPROVED BY COMMISSION ON:_____ UNDER SECTION_____ OF CHAPTER _____ OF THE CITY OF AUSTIN CODE.
EXPIRATION DATE (25-5-81,LDC)._____ CASE MANAGER_____
PROJECT EXPIRATION DATE (ORD.#970905-A)_____DPZ ____DPZ____

Director, Planning and Development Review Department
RELEASED FOR GENERAL COMPLIANCE:_____ ZONING:_____
Rev. 1_____ Correction 1_____
Rev. 2_____ Correction 2_____
Rev. 3_____ Correction 3_____

FINAL PLAT MUST BE RECORDED BY THE PROJECT EXPIRATION DATE, IF APPLICABLE. SUBSEQUENT SITE PLANS WHICH DO NOT COMPLY WITH THE CODE CURRENT AT THE TIME OF FILING, AND ALL REQUIRED BUILDING PERMITS AND/OR A NOTICE OF CONSTRUCTION (IF A BUILDING PERMIT IS NOT REQUIRED), MUST ALSO BE APPROVED PRIOR TO THE PROJECT EXPIRATION DATE.

REVISION	NO.	DATE	APPROVAL

Bury+Partners
221 West Sixth Street, Suite 600
Austin, Texas 78701
Tel. (512)328-0011 Fax (512)328-0325
TBPE Registration Number F-1046
Bury+Partners, Inc. ©Copyright 2013

STATE OF TEXAS
T. JASON ROBERTS
98233
LICENSED PROFESSIONAL ENGINEER
7/24/2013

OVERALL SITE PLAN

WHISPER VALLEY
24 - INCH WATER LINE NO. 2
WHISPER VALLEY

DRAWN BY: RGH
DESIGNED BY: CMC
REVIEWED BY: TJR
PROJECT NO.: 0106960-10003
G:\0106960\03\Plot\0106960035PN01.dwg modified by customp on Jun 11, 13 6:02 PM

SHEET 6 OF 51

NOTES:

1. THIS IS A RECORD DRAWING FROM A PREVIOUS CONTRACT. ACTUAL FIELD CONDITIONS MAY BE DIFFERENT FROM THOSE SHOWN ON THIS DRAWING. CONTRACTOR TO FIELD VERIFY INSTALLED CONDITIONS IMPACTED BY OR IMPACTING THIS WORK PRIOR TO INITIATING THE WORK. CONTRACTOR SHALL REFER TO CONSTRUCTION DOCUMENTS FOR RESPONSIBILITIES RELATIVE TO VERIFICATION OF EXISTING FACILITIES AND COORDINATION WITH PLANT OPERATION.
2. COORDINATES SHOWN ON THIS RECORD DRAWING MAY NOT MATCH THE PLANT GRID ESTABLISHED FOR THIS PROJECT. CONTRACTOR TO FIELD VERIFY INSTALLED CONDITIONS IMPACTED BY OR IMPACTING THIS WORK PRIOR TO INITIATING THE WORK.

THIS CONFORMED DOCUMENT IS RELEASED FOR THE CONVENIENCE OF THE CONTRACTOR UNDER THE AUTHORITY OF:

Casey Wauters 11-01-22

CASEY G. WAUTERS, P.E. DATE
TX LIC NO. 93889

SEE DISCLAIMER FOR LIMITATIONS OF USE.

CONTRACT DOCUMENTS DATED JUNE 10, 2022, AS PART OF THE BIDDING DOCUMENTS (DRAWINGS AND SPECIFICATIONS) AND SUBSEQUENTLY ISSUED ADDENDA HAVE BEEN MERGED INTO ONE CONFORMING SET OF DOCUMENTS FOR THE CONVENIENCE OF THE CONTRACTOR. IF INCONSISTENCIES OR AMBIGUITIES BETWEEN "CONFORMED" DOCUMENTS AND CONTRACT DOCUMENTS ARE FOUND, THE CONTRACT DOCUMENTS SHALL GOVERN.

SP-2012-0322D

REV	DATE	BY	DESCRIPTION
			CONFORMED DOCUMENTS

DESIGNED CW
DRAWN AW
CHECKED SGE
DATE FEBRUARY 2022

** ORIGINAL SEALED BY CASEY G. WAUTERS, P.E. 2/28/2022 TX PE 93889 **

AECOM TECHNICAL SERVICES INC.
13640 BRIARWICK DRIVE, SUITE 200
AUSTIN, TEXAS 78729
WWW.AECOM.COM
TBPE REG. NO. F-3580

carollo
TBPE No. F-882

CITY OF AUSTIN
FOUNDED 1839
CITY OF AUSTIN

CITY OF AUSTIN
WILD HORSE RANCH WWTP EXPANSION
CIVIL
EXISTING WATERLINE
RECORD DRAWING (SHEET 1 OF 3)

VERIFY SCALES
BAR IS ONE INCH ON ORIGINAL DRAWING
0 1"
IF NOT ONE INCH ON THIS SHEET, ADJUST SCALES ACCORDINGLY

JOB NO. 10976A.10
DRAWING NO. 04C10
SHEET NO. 287 OF 464

LAST SAVED BY:

PROJECT NO. 9585A10 FILE NAME: 9585A10_SheetSeed.dgn

WATER LINE NO. 2
24" DUCTILE IRON PIPE

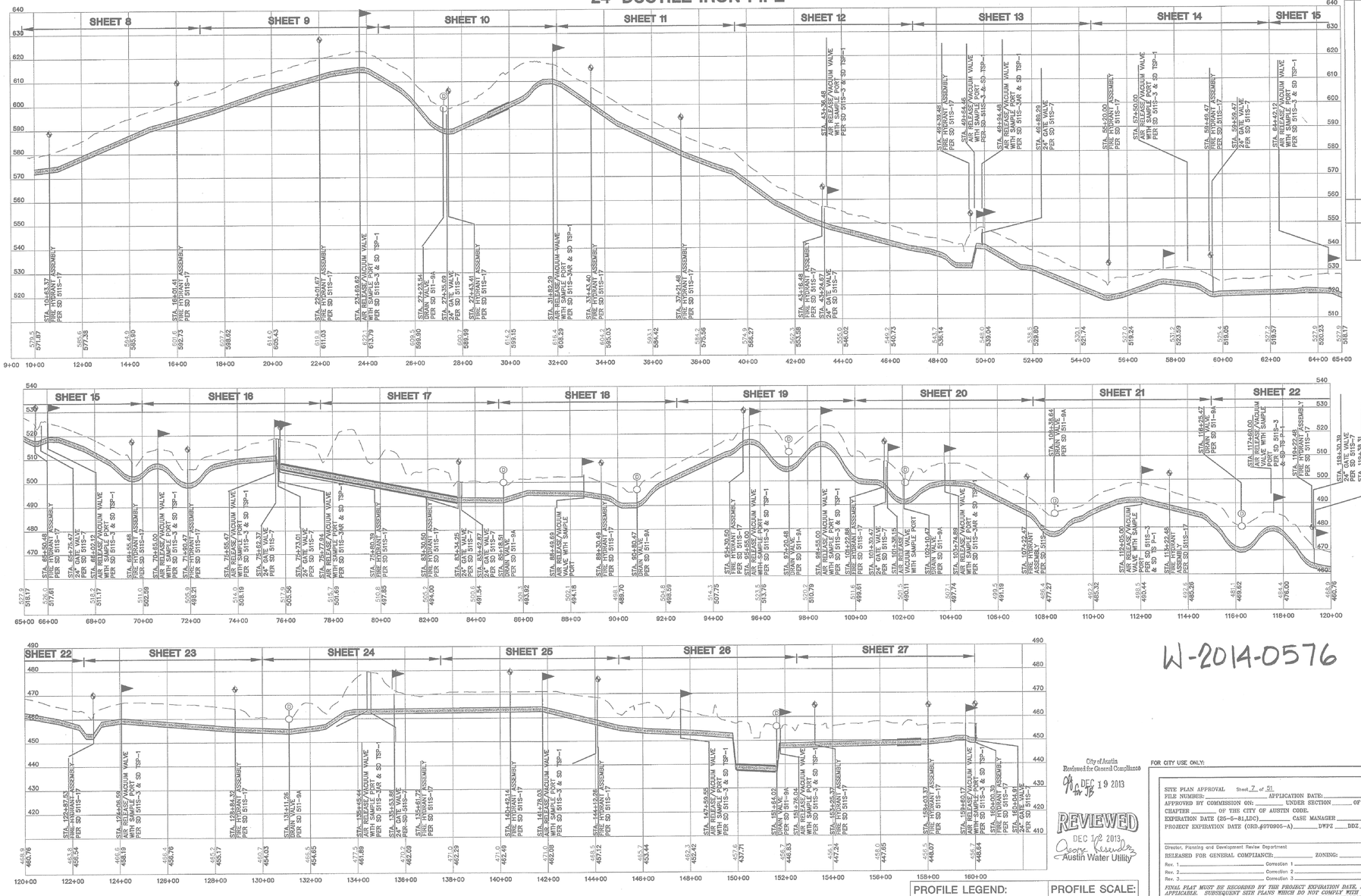

W-2014-0576

PROFILE LEGEND:	PROFILE SCALE:
EXISTING GRADE ———	1"= 200' HORIZONTAL
PROPOSED WATER LINE ———	1"= 20' VERTICAL

City of Austin Reviewed for General Compliance
DEC 19 2013 JB
REVIEWED
DEC 19 2013
George Resendez
Austin Water Utility

FOR CITY USE ONLY:

SITE PLAN APPROVAL Sheet 7 of 51
FILE NUMBER: _____ APPLICATION DATE: _____
APPROVED BY COMMISSION ON: _____ UNDER SECTION _____ OF CHAPTER _____ OF THE CITY OF AUSTIN CODE.
EXPIRATION DATE (25-5-81,LDC) _____ CASE MANAGER _____
PROJECT EXPIRATION DATE (ORD.#970905-A) _____ DWPZ _____ DDZ _____

Director, Planning and Development Review Department
RELEASED FOR GENERAL COMPLIANCE: _____ ZONING: _____
Rev. 1 _____ Correction 1 _____
Rev. 2 _____ Correction 2 _____
Rev. 3 _____ Correction 3 _____

FINAL PLAT MUST BE RECORDED BY THE PROJECT EXPIRATION DATE, IF APPLICABLE. SUBSEQUENT SITE PLANS WHICH DO NOT COMPLY WITH THE CODE CURRENT AT THE TIME OF FILING, AND ALL REQUIRED BUILDING PERMITS AND/OR A NOTICE OF CONSTRUCTION (IF A BUILDING PERMIT IS NOT REQUIRED), MUST ALSO BE APPROVED PRIOR TO THE PROJECT EXPIRATION DATE.

SP-2012-0322D

NOTES:

1. THIS IS A RECORD DRAWING FROM A PREVIOUS CONTRACT. ACTUAL FIELD CONDITIONS MAY BE DIFFERENT FROM THOSE SHOWN ON THIS DRAWING. CONTRACTOR TO FIELD VERIFY INSTALLED CONDITIONS IMPACTED BY OR IMPACTING THIS WORK PRIOR TO INITIATING THE WORK. CONTRACTOR SHALL REFER TO CONSTRUCTION DOCUMENTS FOR RESPONSIBILITIES RELATIVE TO VERIFICATION OF EXISTING FACILITIES AND COORDINATION WITH PLANT OPERATION.
2. COORDINATES SHOWN ON THIS RECORD DRAWING MAY NOT MATCH THE PLANT GRID ESTABLISHED FOR THIS PROJECT. CONTRACTOR TO FIELD VERIFY INSTALLED CONDITIONS IMPACTED BY OR IMPACTING THIS WORK PRIOR TO INITIATING THE WORK.

Bury+Partners
221 West Sixth Street, Suite 600
Austin, Texas 78701
Tel. (512)328-0011 Fax (512)328-0325
TBPE Registration Number F-1046
Bury+Partners, Inc. ©Copyright 2013

APPROVAL | REVISION | NO. | DATE

STATE OF TEXAS
JASON ROBERTS
88235
LICENSED PROFESSIONAL ENGINEER
4/12/2013

OVERALL PROFILE

WHISPER VALLEY
24 - INCH WATER LINE NO. 2

WHISPER VALLEY

DRAWN BY: RGH
DESIGNED BY: CMC
REVIEWED BY: TJR
PROJECT NO.: 0106960-10003

SHEET 7 OF 51

G:\106960\10003\106960003SP002.dwg modified by gshorez on May 14, 13 7:25 AM

THIS CONFORMED DOCUMENT IS RELEASED FOR THE CONVENIENCE OF THE CONTRACTOR UNDER THE AUTHORITY OF:

CASEY G. WAUTERS, P.E. 11-01-22
TX LIC NO. 93889 DATE

SEE DISCLAIMER FOR LIMITATIONS OF USE.

CONTRACT DOCUMENTS DATED JUNE 10, 2022, AS PART OF THE BIDDING DOCUMENTS (DRAWINGS AND SPECIFICATIONS) AND SUBSEQUENTLY ISSUED ADDENDA HAVE BEEN MERGED INTO ONE CONFORMING SET OF DOCUMENTS FOR THE CONVENIENCE OF THE CONTRACTOR. IF INCONSISTENCIES OR AMBIGUITIES BETWEEN "CONFORMED" DOCUMENTS AND CONTRACT DOCUMENTS ARE FOUND, THE CONTRACT DOCUMENTS SHALL GOVERN.

LAST SAVED BY:

REV	DATE	BY	DESCRIPTION
			CONFORMED DOCUMENTS

DESIGNED CW
DRAWN AW
CHECKED SGE
DATE FEBRUARY 2022

**
ORIGINAL
SEALED BY
CASEY G. WAUTERS, P.E.
2/28/2022
TX PE 93889
**

AECOM TECHNICAL SERVICES INC.
13640 BRIARWICK DRIVE, SUITE 200
AUSTIN, TEXAS 78729
WWW.AECOM.COM
TBPE REG. NO. F-3580

carollo
TBPE No. F-882

CITY OF AUSTIN
FOUNDED 1839

CITY OF AUSTIN

CITY OF AUSTIN
WILD HORSE RANCH WWTP EXPANSION
CIVIL
EXISTING WATERLINE
RECORD DRAWING (SHEET 2 OF 3)

VERIFY SCALES
BAR IS ONE INCH ON ORIGINAL DRAWING
0 1"
IF NOT ONE INCH ON THIS SHEET, ADJUST SCALES ACCORDINGLY

JOB NO. 10976A.10
DRAWING NO. 04C11
SHEET NO. 288 OF 464

PROJECT NO. 9585A10 FILE NAME: 9585A10_SheetSeed.dgn

WATERLINE CURVE TABLE					
CURVE #	RADIUS	LENGTH	CHORD DIRECTION	START	END
C1	5804.45'	1054.84'	S33°40'12"E	N 10089520.3140 E 3167549.7575	N 10088643.6365 E 3168133.7636

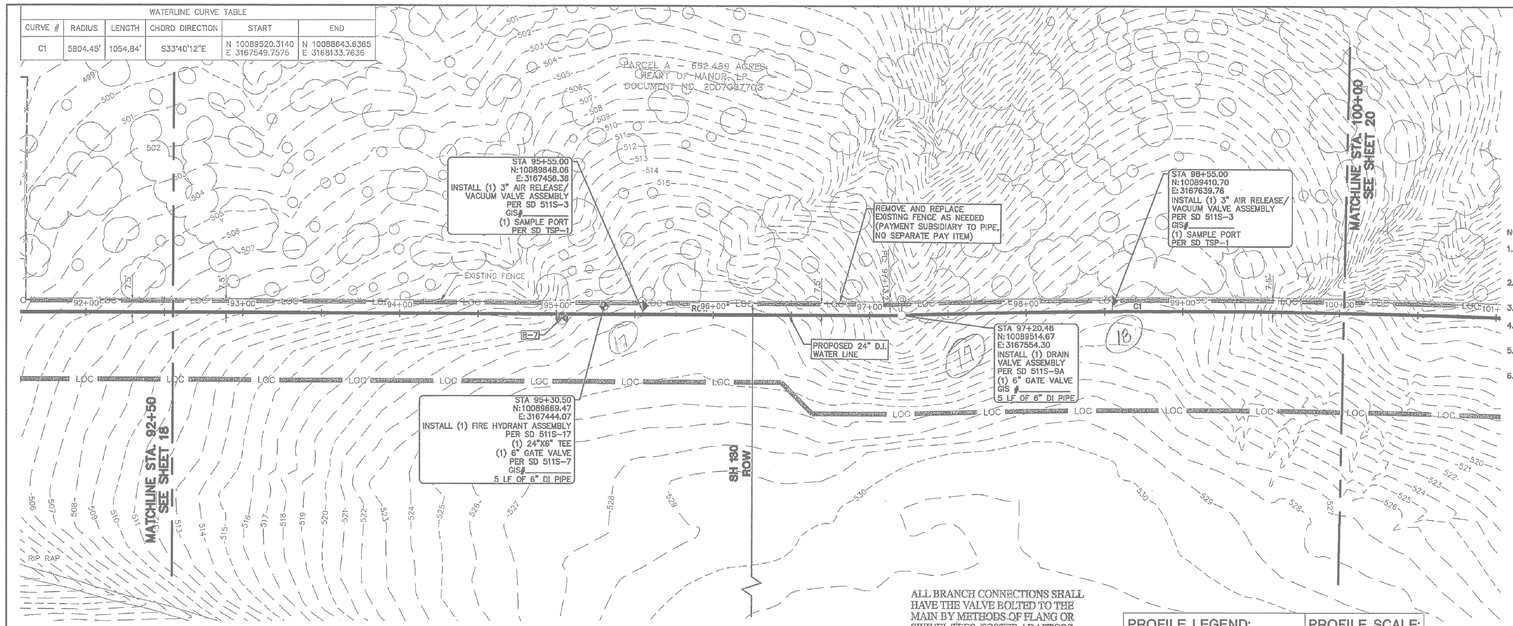

0 20 40 60 80
1"=40'

NOTES:

1. NO LOOSE MATERIAL MAY BE STORED IN THE 100-YEAR FLOOD PLAIN. ALL SPOILS, BEDDING, AND BACKFILL MATERIAL SHALL BE STORED OUTSIDE THE 100-YEAR FLOOD PLAIN.
2. REFER TO THE EROSION CONTROL AND TREE PROTECTION SHEETS FOR EROSION CONTROL MEASURES AND A TREE LIST.
3. TXDOT UIP# AUS2012121010170735
4. CONTRACTOR INSTALL FIRE HYDRANTS 2' AWAY FROM PROPERTY LINE.
5. REFER TO THE TRAFFIC CONTROL PLANS FOR WORK NEAR THE ROADWAY.
6. ALL POTABLE WATER SYSTEM COMPONENTS INSTALLED AFTER JANUARY 4, 2014, SHALL BE ESSENTIALLY "LEAD FREE" ACCORDING TO THE US SAFE DRINKING WATER ACT. EXAMPLES ARE VALVES (CORPORATION STOP, CURB STOP, AND PRESSURE REDUCING), NIPPLES, BUSHINGS, PIPES, FITTINGS, BACKFLOW PREVENTERS AND FIRE HYDRANTS. TAPPING SADDLES AND 2 INCH AND LARGER GATE VALVES ARE THE ONLY COMPONENTS EXEMPT FROM THIS REQUIREMENT. COMPONENTS THAT ARE NOT CLEARLY IDENTIFIED BY THE MANUFACTURER AS MEETING THIS REQUIREMENT EITHER BY MARKINGS ON THE COMPONENT OR ON THE PACKING SHALL NOT BE INSTALLED.

W-2014-0576

811 Know what's below. Call before you dig.

THE LOCATION OF EXISTING UNDERGROUND AND OVERHEAD UTILITIES ARE SHOWN IN AN APPROXIMATE WAY ONLY. THE CONTRACTOR SHALL DETERMINE THE EXACT LOCATION OF ALL EXISTING UTILITIES BEFORE COMMENCING WORK. HE AGREES TO BE FULLY RESPONSIBLE FOR ANY AND ALL DAMAGES WHICH MIGHT BE OCCASIONED BY HIS FAILURE TO EXACTLY LOCATE AND PRESERVE ANY AND ALL UNDERGROUND AND OVERHEAD UTILITIES.

ALL BRANCH CONNECTIONS SHALL HAVE THE VALVE BOLTED TO THE MAIN BY METHODS OF FLANG OR SWIVEL TEES. FOSTER ADAPTORS MAY BE USED IN LIEU OF FLANG OR SWIVEL TEES WHEN CALLED OUT ON PLANS BY DESIGN ENGINEER.

PROFILE LEGEND:	PROFILE SCALE:
EXISTING GRADE	1"= 40' HORIZONTAL
PROPOSED WATER LINE	1"= 8' VERTICAL

24-INCH CL 250 DUCTILE IRON PIPE

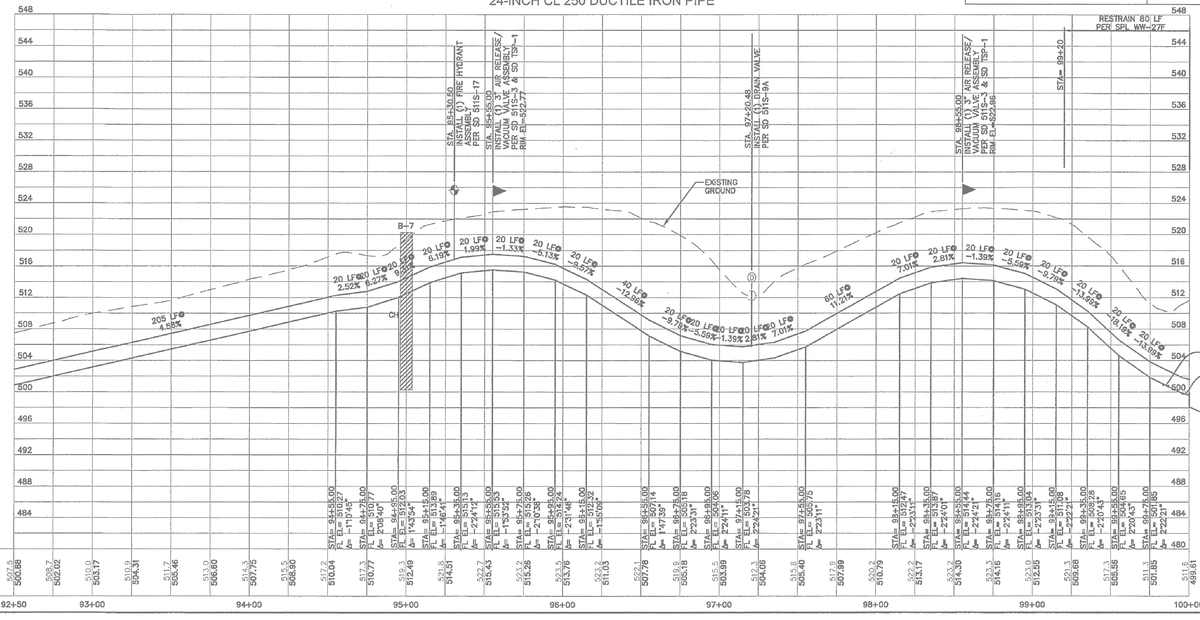

BORING LEGEND

A	ASPHALT
B	BASE
CH	CLAY (FAT, HARD)
CL	CLAY (SILTY, LEAN)
CS	CLAYSHALE (HARD, GREY)
F	FILL: CLAY
M	MARL
ML	SANDY SILT
SC	CLAYEY SAND
SP	SAND

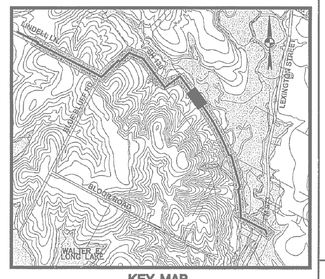

KEY MAP

FOR CITY USE ONLY:

SITE PLAN APPROVAL Sheet 19 of 51
FILE NUMBER: _____ APPLICATION DATE: _____
APPROVED BY COMMISSION ON: _____ UNDER SECTION _____ OF CHAPTER _____ OF THE CITY OF AUSTIN CODE.
EXPIRATION DATE (25-6-81,LDC) _____ CASE MANAGER _____
PROJECT EXPIRATION DATE (ORD.#070905-A) _____ DWPZ ____ DDZ ____

Director, Planning and Development Review Department
RELEASED FOR GENERAL COMPLIANCE: _____ ZONING: _____
Rev. 1 _____ Correction 1 _____
Rev. 2 _____ Correction 2 _____
Rev. 3 _____ Correction 3 _____

FINAL PLAT MUST BE RECORDED BY THE PROJECT EXPIRATION DATE, IF APPLICABLE. SUBSEQUENT SITE PLANS WHICH DO NOT COMPLY WITH THE CODE CURRENT AT THE TIME OF FILING, AND ALL REQUIRED BUILDING PERMITS AND/OR A NOTICE OF CONSTRUCTION (IF A BUILDING PERMIT IS NOT REQUIRED), MUST ALSO BE APPROVED PRIOR TO THE PROJECT EXPIRATION DATE.

City of Austin Reviewed for General Compliance DEC 19 2013

REVIEWED DEC 18 2013 Austin Water Utility

SP-2012-0322D

NOTES:

1. THIS IS A RECORD DRAWING FROM A PREVIOUS CONTRACT. ACTUAL FIELD CONDITIONS MAY BE DIFFERENT FROM THOSE SHOWN ON THIS DRAWING. CONTRACTOR TO FIELD VERIFY INSTALLED CONDITIONS IMPACTED BY OR IMPACTING THIS WORK PRIOR TO INITIATING THE WORK. CONTRACTOR SHALL REFER TO CONSTRUCTION DOCUMENTS FOR RESPONSIBILITIES RELATIVE TO VERIFICATION OF EXISTING FACILITIES AND COORDINATION WITH PLANT OPERATION.
2. COORDINATES SHOWN ON THIS RECORD DRAWING MAY NOT MATCH THE PLANT GRID ESTABLISHED FOR THIS PROJECT. CONTRACTOR TO FIELD VERIFY INSTALLED CONDITIONS IMPACTED BY OR IMPACTING THIS WORK PRIOR TO INITIATING THE WORK.

THIS CONFORMED DOCUMENT IS RELEASED FOR THE CONVENIENCE OF THE CONTRACTOR UNDER THE AUTHORITY OF:

CASEY G. WAUTERS, P.E. — 11-01-22 DATE
TX LIC NO. 93889

SEE DISCLAIMER FOR LIMITATIONS OF USE.

CONTRACT DOCUMENTS DATED JUNE 10, 2022, AS PART OF THE BIDDING DOCUMENTS (DRAWINGS AND SPECIFICATIONS) AND SUBSEQUENTLY ISSUED ADDENDA HAVE BEEN MERGED INTO ONE CONFORMING SET OF DOCUMENTS FOR THE CONVENIENCE OF THE CONTRACTOR. IF INCONSISTENCIES OR AMBIGUITIES BETWEEN "CONFORMED" DOCUMENTS AND CONTRACT DOCUMENTS ARE FOUND, THE CONTRACT DOCUMENTS SHALL GOVERN.

Bury+Partners
221 West Sixth Street, Suite 600
Austin, Texas 78701
Phone (512)328-0011 Fax (512)328-0325
TBPE Registration Number F-1046
Bury+Partners, Inc. ©Copyright 2013

STATE OF TEXAS
T. JASON ROBERTS
98233
LICENSED
PROFESSIONAL ENGINEER
11/30/2013

NO.	DATE	REVISION	APPROVAL

PLAN AND PROFILE
STA 92+50 - 100+00

WHISPER VALLEY
24 - INCH WATER LINE NO. 2

WHISPER VALLEY

DRAWN BY: RGH
DESIGNED BY: CMC
REVIEWED BY: TJR
PROJECT NO.: 0106960-10003

SHEET 19 OF 51

G:\0106960\10003\0106960003PP03.dwg modified by gutierrez on Jul 24, 13 7:43 AM

REV	DATE	BY	DESCRIPTION

CONFORMED DOCUMENTS

DESIGNED CW
DRAWN AW
CHECKED SGE
DATE FEBRUARY 2022

ORIGINAL SEALED BY CASEY G. WAUTERS, P.E. 2/28/2022 TX PE 93889

AECOM TECHNICAL SERVICES INC.
13640 BRIARWICK DRIVE, SUITE 200
AUSTIN, TEXAS 78729
WWW.AECOM.COM
TBPE REG. NO. F-3580

carollo
TBPE No. F-882

CITY OF AUSTIN
FOUNDED 1839

CITY OF AUSTIN

CITY OF AUSTIN
WILD HORSE RANCH WWTP EXPANSION
CIVIL
EXISTING WATERLINE
RECORD DRAWING (SHEET 3 OF 3)

VERIFY SCALES
BAR IS ONE INCH ON ORIGINAL DRAWING
0 1"
IF NOT ONE INCH ON THIS SHEET, ADJUST SCALES ACCORDINGLY

JOB NO. 10976A.10
DRAWING NO. 04C12
SHEET NO. 289 OF 464

LAST SAVED BY:

PROJECT NO. 9585A10 FILE NAME: 9585A10_SheetSeed.dgn

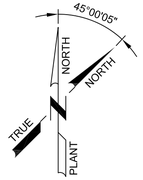

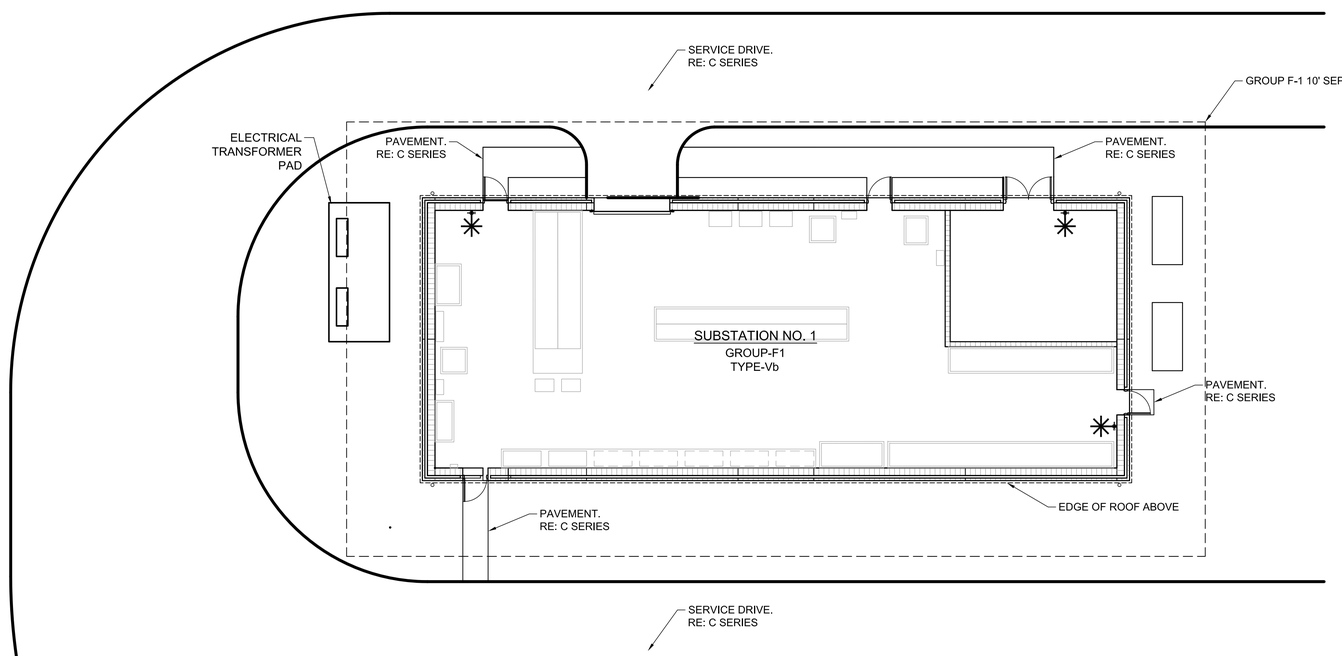

BUILDING DATA

TOTAL BUILDING FLOOR AREA:
3,398 SF - GROSS
3,034 SF - NET
GROUP F-1: 3,398 SF

LEGEND

FIRE EXTINGUISHER

BUILDING CODE REVIEW

NOTES:
* THIS REVIEW IS BASED UPON THE 2015 EDITION OF THE INTERNATIONAL BUILDING CODE
* ITEMS UNDERLINED REQUIRE CONFIRMATION BY REGULATORY APPROVAL AUTHORITY

CHAPTER 3:
SECTION 306.2 - THIS IS A GROUP F-1 OCCUPANCY STRUCTURE

CHAPTER 4:
NOT APPLICABLE

CHAPTER 5:
SECTION 501.2 - ADDRESS IDENTIFICATION WILL BE PROVIDED WITH STANDARD NOMENCLATURE FOR SITE

SECTION 503.1.1 - THIS IS A SPECIAL INDUSTRIAL OCCUPANCY AND THEREFORE EXEMPT FROM COMPLIANCE WITH SECTIONS 504 AND 506.

TABLE 506.2 - TYPE VB CONSTRUCTION PROPOSED

CHAPTER 6:
TABLE 601 - ALL BUILDING ELEMENTS ARE NOT REQUIRED TO BE RATED

TABLE 602 - EXTERIOR WALL RATING PER FIRE SEPARATION

< 5 FT.	2 HOUR RATED
5 FT. TO < 10 FT.	1 HOUR RATED
> 10 FT.	NO RATING REQUIRED

CHAPTER 7:
NOT APPLICABLE

CHAPTER 8:
SECTION 803.1.1 - ALL INTERIOR FINISHES SHALL BE CLASS-C MINIMUM.

CHAPTER 9:
SECTION 903.2.4 - AN AUTOMATIC SPRINKLER SYSTEM IS NOT PROPOSED OR REQUIRED (<12,000 SF, <4 STORIES ABOVE GRADE PLANE, City of Austin Municode 25-12-3-903.3.3.1.1.1.1)

SECTION 906.1 - PORTABLE FIRE EXTINGUISHERS ARE REQUIRED

TABLE 906.3(1) - PORTABLE FIRE EXTINGUISHERS SHALL BE INSTALLED IN CONSPICUOUS LOCATIONS WITHIN 75' OF TRAVEL FROM ALL POINTS OF BUILDING INTERIOR (RE:1/00TA08)

SECTION 907.2.4 - A MANUAL FIRE ALARM SYSTEM IS NOT REQUIRED (<2 STORIES)

CHAPTER 10:
TABLE 1004.1.2 -
FUNCTION OF SPACE - MECHANICAL EQUIPMENT ROOM
OCCUPANCY LOAD FACTOR - 1 OCCUPANT PER 300 GROSS SF
DATA - 3,398 SF / 300 = 11.33 (< 12)
ACTUAL OCCUPANT LOAD = 0 TO 5

TABLE 1006.2.1 - ONE EXIT WITH TRAVEL DISTANCE OF 75 FT ALLOWED

SECTION 1009 - THIS BUILDING IS NOT REQUIRED TO BE ACCESSIBLE.
RE: ACCESSIBILITY NOTES THIS SHEET

CHAPTER 11:
SEE ACCESSIBILITY NOTES THIS SHEET

ACCESSIBILITY NOTES

THIS BUILDING SHALL NOT HAVE PUBLIC USE.

GROUP-F1 SPACES ARE CONSIDERED "MACHINERY SPACES" AND THEREFORE NOT REQUIRED TO BE ACCESSIBLE PER 2012 TAS 203.5.

THIS CONFORMED DOCUMENT IS RELEASED FOR THE CONVENIENCE OF THE CONTRACTOR UNDER THE AUTHORITY OF:

11-01-22

DAVID NEGRETE, R.A. DATE
TX LIC NO. 11640

SEE DISCLAIMER FOR LIMITATIONS OF USE.

CONTRACT DOCUMENTS DATED JUNE 10, 2022, AS PART OF THE BIDDING DOCUMENTS (DRAWINGS AND SPECIFICATIONS) AND SUBSEQUENTLY ISSUED ADDENDA HAVE BEEN MERGED INTO ONE CONFORMING SET OF DOCUMENTS FOR THE CONVENIENCE OF THE CONTRACTOR. IF INCONSISTENCIES OR AMBIGUITIES BETWEEN "CONFORMED" DOCUMENTS AND CONTRACT DOCUMENTS ARE FOUND, THE CONTRACT DOCUMENTS SHALL GOVERN.

A VICINITY PLAN - SUBSTATION NO. 1

SCALE: 1"=10'-0"
FILE: 10976A1085A101.dwg

REV	DATE	BY	DESCRIPTION
			CONFORMED DOCUMENTS

DESIGNED JTG
DRAWN JTG
CHECKED JTG
DATE NOVEMBER 2022

** ORIGINAL SEALED BY DAVID NEGRETE 06-10-22 TX RA 11640 **

NEGRETE & KOLAR ARCHITECTS,LLP
11720 NORTH IH 35, AUSTIN TEXAS 78753 P: 512.474.6526

carollo
TBPELS No. F-882

CITY OF AUSTIN
FOUNDED 1839
CITY OF AUSTIN

CITY OF AUSTIN
WILD HORSE RANCH WWTP EXPANSION
ARCHITECTURAL
SUBSTATION NO. 1
CODE REVIEW DATA

VERIFY SCALES
BAR IS ONE INCH ON ORIGINAL DRAWING
0 1"
IF NOT ONE INCH ON THIS SHEET, ADJUST SCALES ACCORDINGLY

JOB NO. 10976A.00
DRAWING NO. 85A01
SHEET NO. 289 OF 464

LAST SAVED BY: Jason.George

PROJECT NO. 10976A10 FILE NAME: 10976A1085A01.dwg

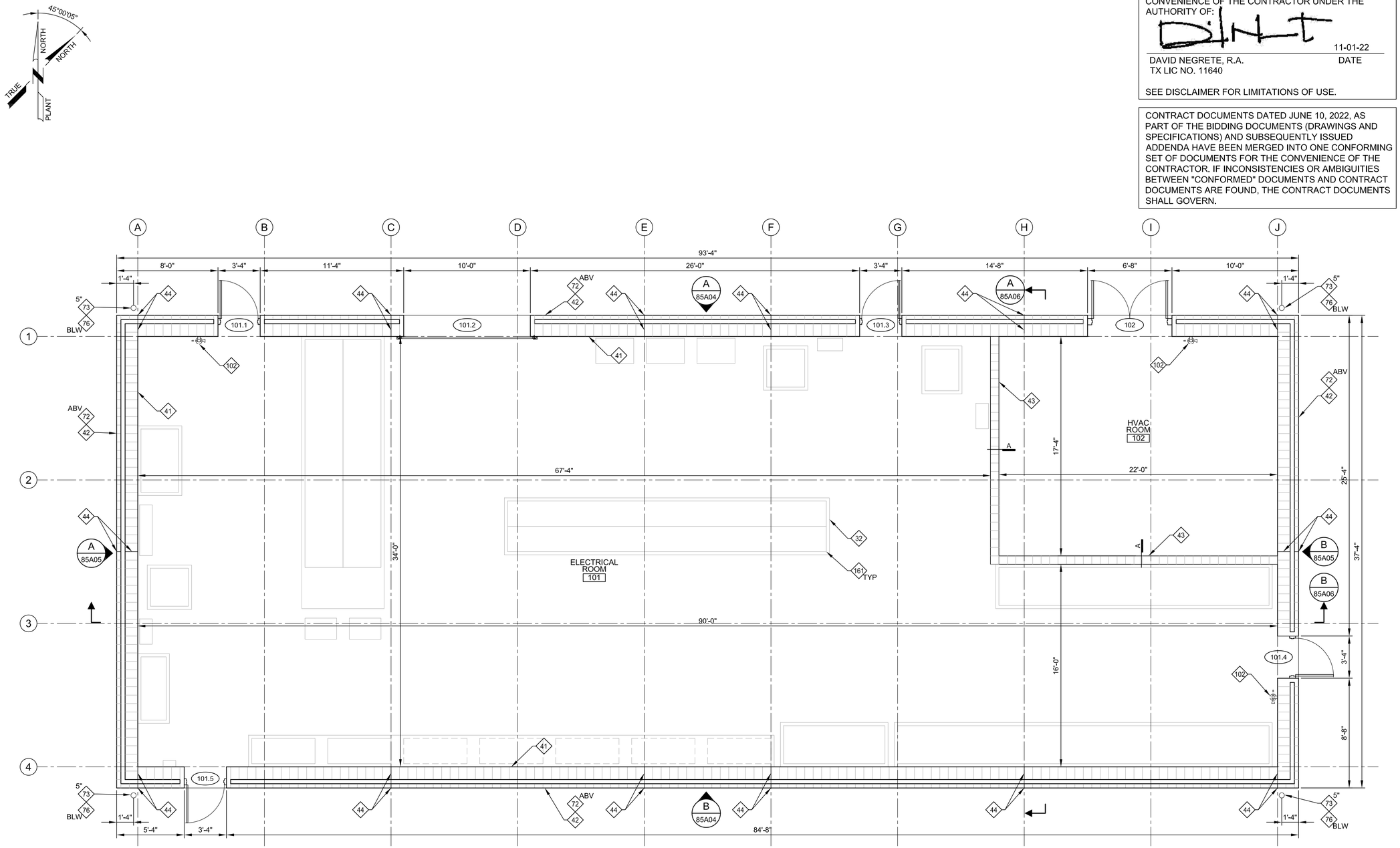

A PLAN - SUBSTATION NO.1 - LEVEL 1

SCALE: 1/4"=1'-0"
FILE: 10976A1085A101.dwg

LEGEND

XXX DOOR TYPE; RE: SHEET 85A09

X PARTITION TYPE; RE: SHEET 85A10

THIS CONFORMED DOCUMENT IS RELEASED FOR THE CONVENIENCE OF THE CONTRACTOR UNDER THE AUTHORITY OF:

DINT

11-01-22

DAVID NEGRETE, R.A. DATE
TX LIC NO. 11640

SEE DISCLAIMER FOR LIMITATIONS OF USE.

CONTRACT DOCUMENTS DATED JUNE 10, 2022, AS PART OF THE BIDDING DOCUMENTS (DRAWINGS AND SPECIFICATIONS) AND SUBSEQUENTLY ISSUED ADDENDA HAVE BEEN MERGED INTO ONE CONFORMING SET OF DOCUMENTS FOR THE CONVENIENCE OF THE CONTRACTOR. IF INCONSISTENCIES OR AMBIGUITIES BETWEEN "CONFORMED" DOCUMENTS AND CONTRACT DOCUMENTS ARE FOUND, THE CONTRACT DOCUMENTS SHALL GOVERN.

GENERAL NOTES

1. REFER TO ARCHITECTURAL SCHEDULES AND TYP DETAILS FOR ADDL INFO
2. REFER TO TYP ARCHITECTURAL DETAILS FOR ADDITIONAL INFORMATION RE: 00TA01-00TA08
3. KEY NOTE PREFIX CORRESPONDS TO SPEC DIVISION FOR EACH FACILITY: NOT ALL KEY NOTES ARE PERTINENT TO EVERY SHEET

KEY NOTES

21 ADJACENT PAVEMENT OR GRADE RE: C SERIES
31 CONCRETE STRUCTURE RE: S SERIES DWGS
32 CONCRETE CURB OR PAD OR WALL RE: S SERIES DWGS
41 CMU: 12-IN NOM BED WIDTH
42 CMU: 4-IN NOM BED WIDTH
43 CMU: 8-IN NOM BED WIDTH
44 MASONRY CONTROL JOINT
45 CAST STONE WAINSCOT CAP
51 STRUCT STEEL FRAME AND DECK RE: S SERIES DWGS
61 WOOD BLOCKING
71 ROOF ASSEMBLY OR ACCESSORY
72 EXTERIOR WALL PANEL OR ACCESSORY
73 GUTTER AND DOWNSPOUT SYSTEM
74 FOAMED-IN-PLACE MASONRY INSULATION
75 BATT INSULATION FULL WIDTH OF STUD CAVITY
76 SHEET MOISTURE BARRIER
77 PRECAST CONCRETE SPLASH PAD
81 SCHEDULED DOOR RE: DOOR SCHEDULE
83 SCHEDULED OVERHEAD COILING DOOR RE: DOOR SCHEDULE
92 GYPSUM BOARD, FRAMING OR ACCESSORY
99 PAINTED SURFACE RE: FINISH SCHEDULE
101 BUILDING SIGNAGE
102 FIRE EXTINGUISHER - SURFACE MOUNTED RE: 1/00TA08
151 HVAC EQUIPMENT OR ACCESSORY RE: H SERIES DWGS
161 ELECTRICAL EQUIPMENT OR ACCESSORY RE: E SERIES DWGS

REV	DATE	BY	DESCRIPTION
			CONFORMED DOCUMENTS

DESIGNED JTG
DRAWN JTG
CHECKED JTG
DATE NOVEMBER 2022

** ORIGINAL SEALED BY DAVID NEGRETE 06-10-22 TX RA 11640 **

NEGRETE & KOLAR ARCHITECTS,LLP
11720 NORTH IH 35, AUSTIN TEXAS 78753 P: 512.474.6526

carollo TBPELS No. F-882

CITY OF AUSTIN FOUNDED 1839

CITY OF AUSTIN

CITY OF AUSTIN
WILD HORSE RANCH WWTP EXPANSION
ARCHITECTURAL
SUBSTATION NO. 1
LEVEL ONE FLOOR PLAN

VERIFY SCALES
BAR IS ONE INCH ON ORIGINAL DRAWING
0 1"
IF NOT ONE INCH ON THIS SHEET, ADJUST SCALES ACCORDINGLY

JOB NO. 10976A.00
DRAWING NO. 85A02
SHEET NO. 291 OF 464

LAST SAVED BY: Jason.George

PROJECT NO. 10976A10 FILE NAME: 10976A1085A02.dwg

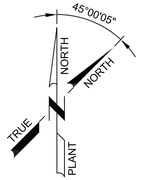

THIS CONFORMED DOCUMENT IS RELEASED FOR THE CONVENIENCE OF THE CONTRACTOR UNDER THE AUTHORITY OF:

11-01-22

DAVID NEGRETE, R.A. DATE
TX LIC NO. 11640

SEE DISCLAIMER FOR LIMITATIONS OF USE.

CONTRACT DOCUMENTS DATED JUNE 10, 2022, AS PART OF THE BIDDING DOCUMENTS (DRAWINGS AND SPECIFICATIONS) AND SUBSEQUENTLY ISSUED ADDENDA HAVE BEEN MERGED INTO ONE CONFORMING SET OF DOCUMENTS FOR THE CONVENIENCE OF THE CONTRACTOR. IF INCONSISTENCIES OR AMBIGUITIES BETWEEN "CONFORMED" DOCUMENTS AND CONTRACT DOCUMENTS ARE FOUND, THE CONTRACT DOCUMENTS SHALL GOVERN.

GENERAL NOTES

1. REFER TO ARCHITECTURAL SCHEDULES AND TYP DETAILS FOR ADDL INFO
2. REFER TO TYP ARCHITECTURAL DETAILS FOR ADDITIONAL INFORMATION RE: 00TA01-00TA08
3. KEY NOTE PREFIX CORRESPONDS TO SPEC DIVISION FOR EACH FACILITY: NOT ALL KEY NOTES ARE PERTINENT TO EVERY SHEET

KEY NOTES

- 21 ADJACENT PAVEMENT OR GRADE RE: C SERIES
- 31 CONCRETE STRUCTURE RE: S SERIES DWGS
- 32 CONCRETE CURB OR PAD OR WALL RE: S SERIES DWGS
- 41 CMU: 12-IN NOM BED WIDTH
- 42 CMU: 4-IN NOM BED WIDTH
- 43 CMU: 8-IN NOM BED WIDTH
- 44 MASONRY CONTROL JOINT
- 45 CAST STONE WAINSCOT CAP
- 51 STRUCT STEEL FRAME AND DECK RE: S SERIES DWGS
- 61 WOOD BLOCKING
- 71 ROOF ASSEMBLY OR ACCESSORY
- 72 EXTERIOR WALL PANEL OR ACCESSORY
- 73 GUTTER AND DOWNSPOUT SYSTEM
- 74 FOAMED-IN-PLACE MASONRY INSULATION
- 75 BATT INSULATION FULL WIDTH OF STUD CAVITY
- 76 SHEET MOISTURE BARRIER
- 77 PRECAST CONCRETE SPLASH PAD
- 81 SCHEDULED DOOR RE: DOOR SCHEDULE
- 83 SCHEDULED OVERHEAD COILING DOOR RE: DOOR SCHEDULE
- 92 GYPSUM BOARD, FRAMING OR ACCESSORY
- 99 PAINTED SURFACE RE: FINISH SCHEDULE
- 101 BUILDING SIGNAGE
- 102 FIRE EXTINGUISHER - SURFACE MOUNTED RE: 1/00TA08
- 151 HVAC EQUIPMENT OR ACCESSORY RE: H SERIES DWGS
- 161 ELECTRICAL EQUIPMENT OR ACCESSORY RE: E SERIES DWGS

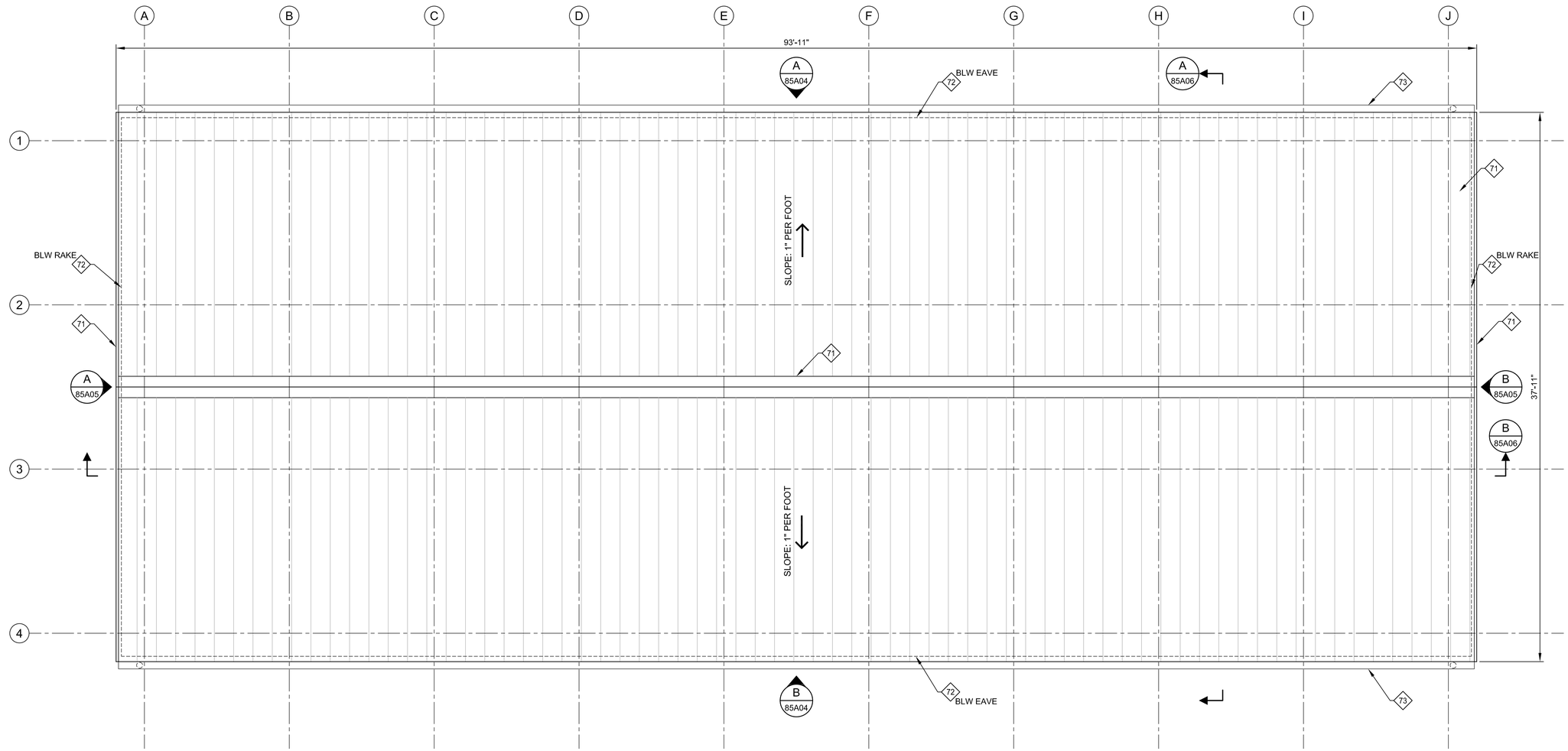

A PLAN - SUBSTATION NO. 1 - ROOF PLAN

SCALE: 1/4"=1'-0"
FILE: 10976A1085A102.dwg

REV	DATE	BY	DESCRIPTION
			CONFORMED DOCUMENTS

DESIGNED JTG
DRAWN JTG
CHECKED JTG
DATE NOVEMBER 2022

** ORIGINAL SEALED BY DAVID NEGRETE 06-10-22 TX RA 11640 **

NEGRETE & KOLAR ARCHITECTS,LLP
11720 NORTH IH 35, AUSTIN TEXAS 78753 P: 512.474.6526

carollo
TBPELS No. F-882

CITY OF AUSTIN
FOUNDED 1839
CITY OF AUSTIN

CITY OF AUSTIN
WILD HORSE RANCH WWTP EXPANSION
ARCHITECTURAL
SUBSTATION NO.1
ROOF PLAN

VERIFY SCALES
BAR IS ONE INCH ON ORIGINAL DRAWING
0 1"
IF NOT ONE INCH ON THIS SHEET, ADJUST SCALES ACCORDINGLY

JOB NO. 10976A.00
DRAWING NO. 85A03
SHEET NO. 292 OF 464

LAST SAVED BY: Jason.George

PROJECT NO. 10976A10 FILE NAME: 10976A1085A03.dwg

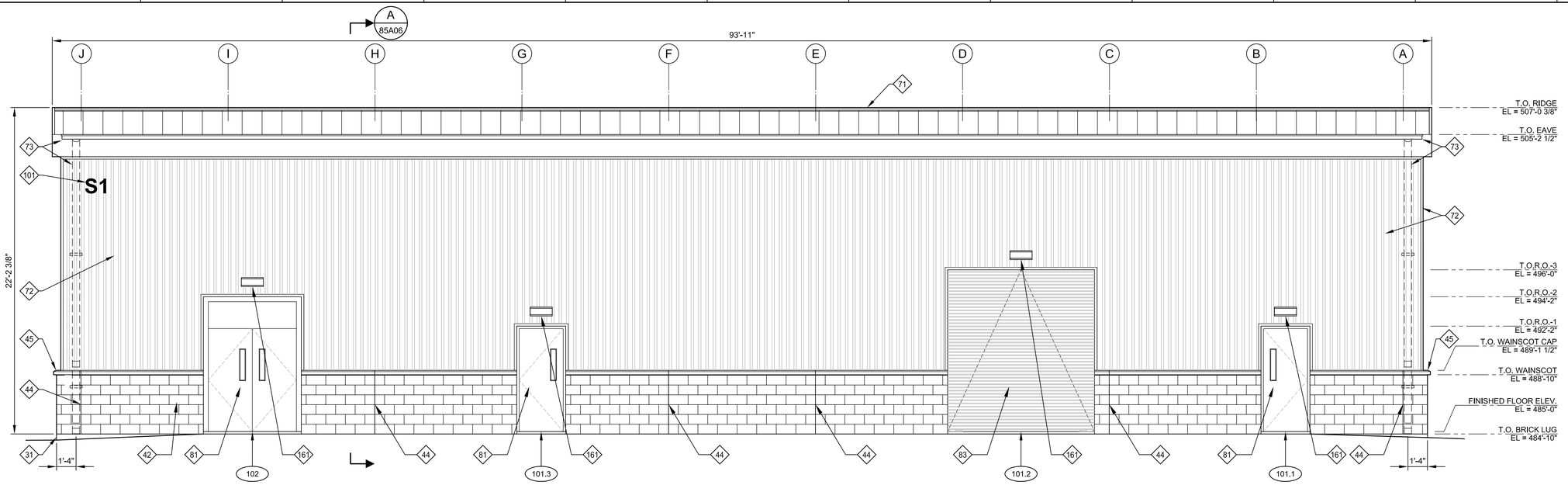

A ELEVATION - SUBSTATION NO. 1 - NORTH

SCALE: 1/4"=1'-0"
FILE: 10976A1085A501.dwg

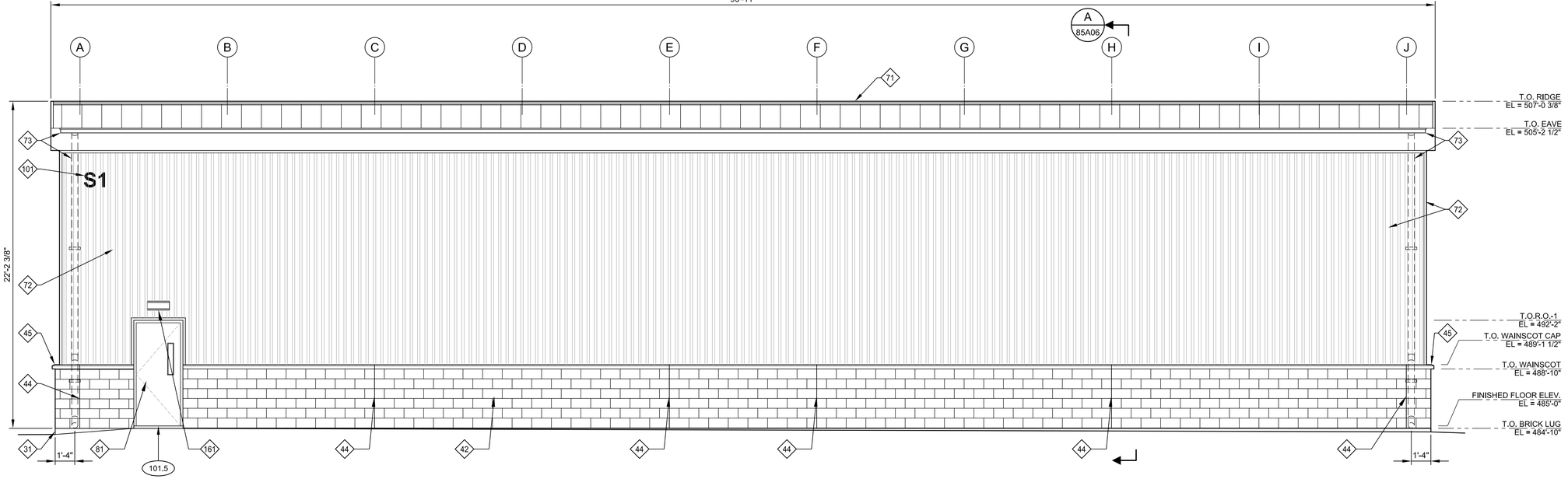

B ELEVATION - SUBSTATION NO. 1 - SOUTH

SCALE: 1/4"=1'-0"
FILE: 10976A1085A503.dwg

GENERAL NOTES

1. REFER TO ARCHITECTURAL SCHEDULES AND TYP DETAILS FOR ADDL INFO
2. REFER TO TYP ARCHITECTURAL DETAILS FOR ADDITIONAL INFORMATION RE: 00TA01-00TA08
3. KEY NOTE PREFIX CORRESPONDS TO SPEC DIVISION FOR EACH FACILITY: NOT ALL KEY NOTES ARE PERTINENT TO EVERY SHEET

KEY NOTES

- 21 ADJACENT PAVEMENT OR GRADE RE: C SERIES
- 31 CONCRETE STRUCTURE RE: S SERIES DWGS
- 32 CONCRETE CURB OR PAD OR WALL RE: S SERIES DWGS
- 41 CMU: 12-IN NOM BED WIDTH
- 42 CMU: 4-IN NOM BED WIDTH
- 43 CMU: 8-IN NOM BED WIDTH
- 44 MASONRY CONTROL JOINT
- 45 CAST STONE WAINSCOT CAP
- 51 STRUCT STEEL FRAME AND DECK RE: S SERIES DWGS
- 61 WOOD BLOCKING
- 71 ROOF ASSEMBLY OR ACCESSORY
- 72 EXTERIOR WALL PANEL OR ACCESSORY
- 73 GUTTER AND DOWNSPOUT SYSTEM
- 74 FOAMED-IN-PLACE MASONRY INSULATION
- 75 BATT INSULATION FULL WIDTH OF STUD CAVITY
- 76 SHEET MOISTURE BARRIER
- 77 PRECAST CONCRETE SPLASH PAD
- 81 SCHEDULED DOOR RE: DOOR SCHEDULE
- 83 SCHEDULED OVERHEAD COILING DOOR RE: DOOR SCHEDULE
- 92 GYPSUM BOARD, FRAMING OR ACCESSORY
- 99 PAINTED SURFACE RE: FINISH SCHEDULE
- 101 BUILDING SIGNAGE
- 102 FIRE EXTINGUISHER - SURFACE MOUNTED RE: 1/00TA08
- 151 HVAC EQUIPMENT OR ACCESSORY RE: H SERIES DWGS
- 161 ELECTRICAL EQUIPMENT OR ACCESSORY RE: E SERIES DWGS

THIS CONFORMED DOCUMENT IS RELEASED FOR THE CONVENIENCE OF THE CONTRACTOR UNDER THE AUTHORITY OF:

DAVID NEGRETE, R.A. — 11-01-22
TX LIC NO. 11640 — DATE

SEE DISCLAIMER FOR LIMITATIONS OF USE.

CONTRACT DOCUMENTS DATED JUNE 10, 2022, AS PART OF THE BIDDING DOCUMENTS (DRAWINGS AND SPECIFICATIONS) AND SUBSEQUENTLY ISSUED ADDENDA HAVE BEEN MERGED INTO ONE CONFORMING SET OF DOCUMENTS FOR THE CONVENIENCE OF THE CONTRACTOR. IF INCONSISTENCIES OR AMBIGUITIES BETWEEN "CONFORMED" DOCUMENTS AND CONTRACT DOCUMENTS ARE FOUND, THE CONTRACT DOCUMENTS SHALL GOVERN.

REV	DATE	BY	DESCRIPTION
			CONFORMED DOCUMENTS

DESIGNED JTG
DRAWN JTG
CHECKED JTG
DATE NOVEMBER 2022

** ORIGINAL SEALED BY DAVID NEGRETE 06-10-22 TX RA 11640 **

NEGRETE & KOLAR ARCHITECTS,LLP
11720 NORTH IH 35, AUSTIN TEXAS 78753 P: 512.474.6526
carollo TBPELS No. F-882

CITY OF AUSTIN — FOUNDED 1839
CITY OF AUSTIN

CITY OF AUSTIN
WILD HORSE RANCH WWTP EXPANSION
ARCHITECTURAL
SUBSTATION NO. 1
EXTERIOR ELEVATIONS - NORTH & SOUTH

VERIFY SCALES
BAR IS ONE INCH ON ORIGINAL DRAWING
0 1"
IF NOT ONE INCH ON THIS SHEET, ADJUST SCALES ACCORDINGLY

JOB NO. 10976A.00
DRAWING NO. 85A04
SHEET NO. 293 OF 464

LAST SAVED BY: Jason.George

PROJECT NO. 10976A10 FILE NAME: 10976A1085A04.dwg

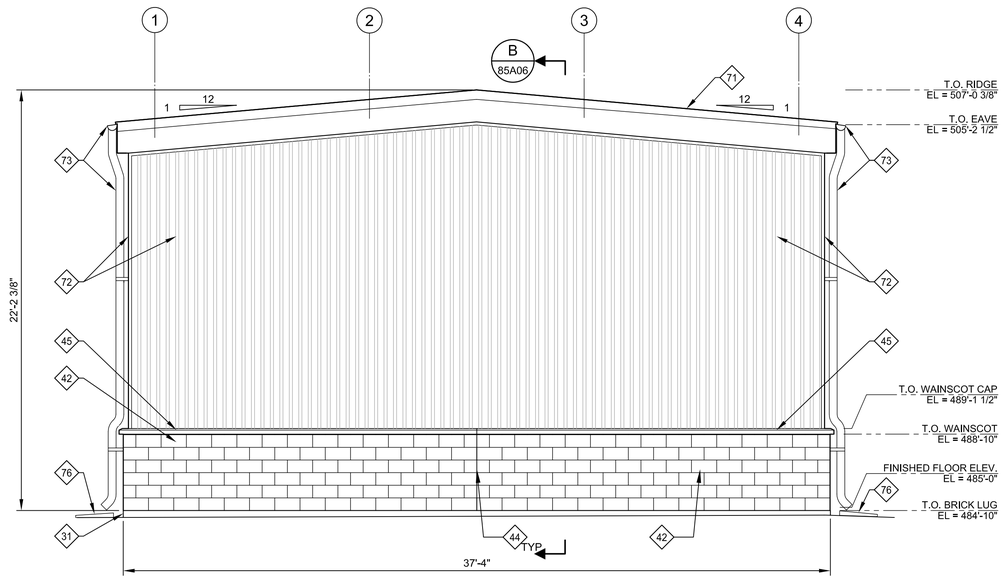

A ELEVATION - SUBSTATION NO. 1 - WEST

SCALE: 1/4"=1'-0"
FILE: 10976A1085A502.dwg

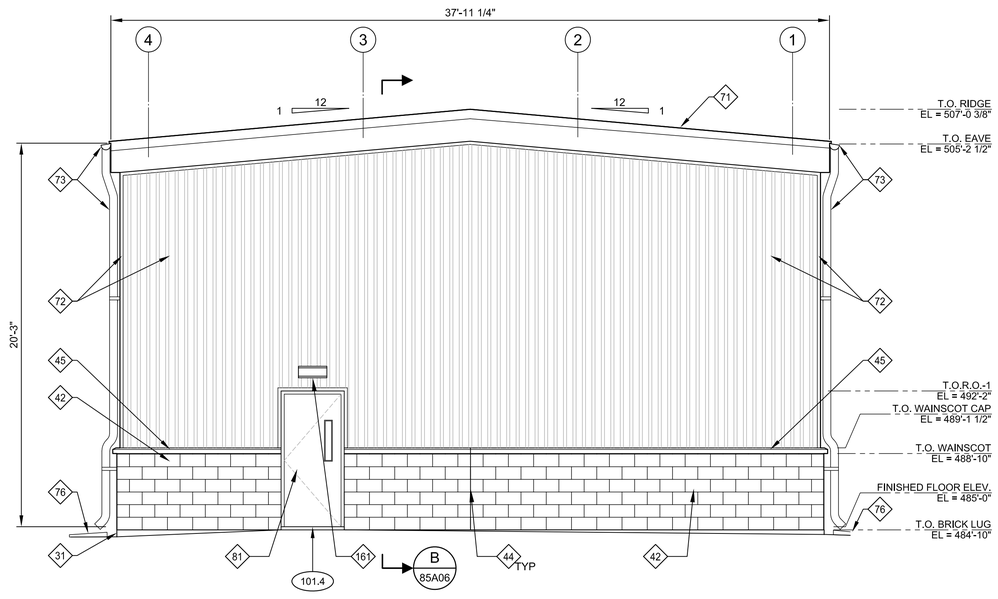

B ELEVATION - SUBSTATION NO. 1 - EAST

SCALE: 1/4"=1'-0"
FILE: 10976A1085A504.dwg

GENERAL NOTES

1. REFER TO ARCHITECTURAL SCHEDULES AND TYP DETAILS FOR ADDL INFO
2. REFER TO TYP ARCHITECTURAL DETAILS FOR ADDITIONAL INFORMATION
   RE: 00TA01-00TA08
3. KEY NOTE PREFIX CORRESPONDS TO SPEC DIVISION FOR EACH FACILITY: NOT ALL KEY NOTES ARE PERTINENT TO EVERY SHEET

KEY NOTES

- 21 ADJACENT PAVEMENT OR GRADE RE: C SERIES
- 31 CONCRETE STRUCTURE RE: S SERIES DWGS
- 32 CONCRETE CURB OR PAD OR WALL RE: S SERIES DWGS
- 41 CMU: 12-IN NOM BED WIDTH
- 42 CMU: 4-IN NOM BED WIDTH
- 43 CMU: 8-IN NOM BED WIDTH
- 44 MASONRY CONTROL JOINT
- 45 CAST STONE WAINSCOT CAP
- 51 STRUCT STEEL FRAME AND DECK RE: S SERIES DWGS
- 61 WOOD BLOCKING
- 71 ROOF ASSEMBLY OR ACCESSORY
- 72 EXTERIOR WALL PANEL OR ACCESSORY
- 73 GUTTER AND DOWNSPOUT SYSTEM
- 74 FOAMED-IN-PLACE MASONRY INSULATION
- 75 BATT INSULATION FULL WIDTH OF STUD CAVITY
- 76 SHEET MOISTURE BARRIER
- 77 PRECAST CONCRETE SPLASH PAD
- 81 SCHEDULED DOOR RE: DOOR SCHEDULE
- 83 SCHEDULED OVERHEAD COILING DOOR RE: DOOR SCHEDULE
- 92 GYPSUM BOARD, FRAMING OR ACCESSORY
- 99 PAINTED SURFACE RE: FINISH SCHEDULE
- 101 BUILDING SIGNAGE
- 102 FIRE EXTINGUISHER - SURFACE MOUNTED RE: 1/00TA08
- 151 HVAC EQUIPMENT OR ACCESSORY RE: H SERIES DWGS
- 161 ELECTRICAL EQUIPMENT OR ACCESSORY RE: E SERIES DWGS

THIS CONFORMED DOCUMENT IS RELEASED FOR THE CONVENIENCE OF THE CONTRACTOR UNDER THE AUTHORITY OF:

11-01-22

DAVID NEGRETE, R.A. DATE
TX LIC NO. 11640

SEE DISCLAIMER FOR LIMITATIONS OF USE.

CONTRACT DOCUMENTS DATED JUNE 10, 2022, AS PART OF THE BIDDING DOCUMENTS (DRAWINGS AND SPECIFICATIONS) AND SUBSEQUENTLY ISSUED ADDENDA HAVE BEEN MERGED INTO ONE CONFORMING SET OF DOCUMENTS FOR THE CONVENIENCE OF THE CONTRACTOR. IF INCONSISTENCIES OR AMBIGUITIES BETWEEN "CONFORMED" DOCUMENTS AND CONTRACT DOCUMENTS ARE FOUND, THE CONTRACT DOCUMENTS SHALL GOVERN.

REV	DATE	BY	DESCRIPTION
			CONFORMED DOCUMENTS

DESIGNED JTG
DRAWN JTG
CHECKED JTG
DATE NOVEMBER 2022

** ORIGINAL SEALED BY DAVID NEGRETE 06-10-22 TX RA 11640 **

NEGRETE & KOLAR ARCHITECTS,LLP
11720 NORTH IH 35, AUSTIN TEXAS 78753 P: 512.474.6526
carollo TBPELS No. F-882

CITY OF AUSTIN
WILD HORSE RANCH WWTP EXPANSION
ARCHITECTURAL
SUBSTATION NO. 1
EXTERIOR ELEVATIONS - EAST & WEST

VERIFY SCALES
BAR IS ONE INCH ON ORIGINAL DRAWING
0 1"
IF NOT ONE INCH ON THIS SHEET, ADJUST SCALES ACCORDINGLY

JOB NO. 10976A.00
DRAWING NO. 85A05
SHEET NO. 294 OF 464

LAST SAVED BY: Jason.George

PROJECT NO. 10976A10 FILE NAME: 10976A1085A05.dwg

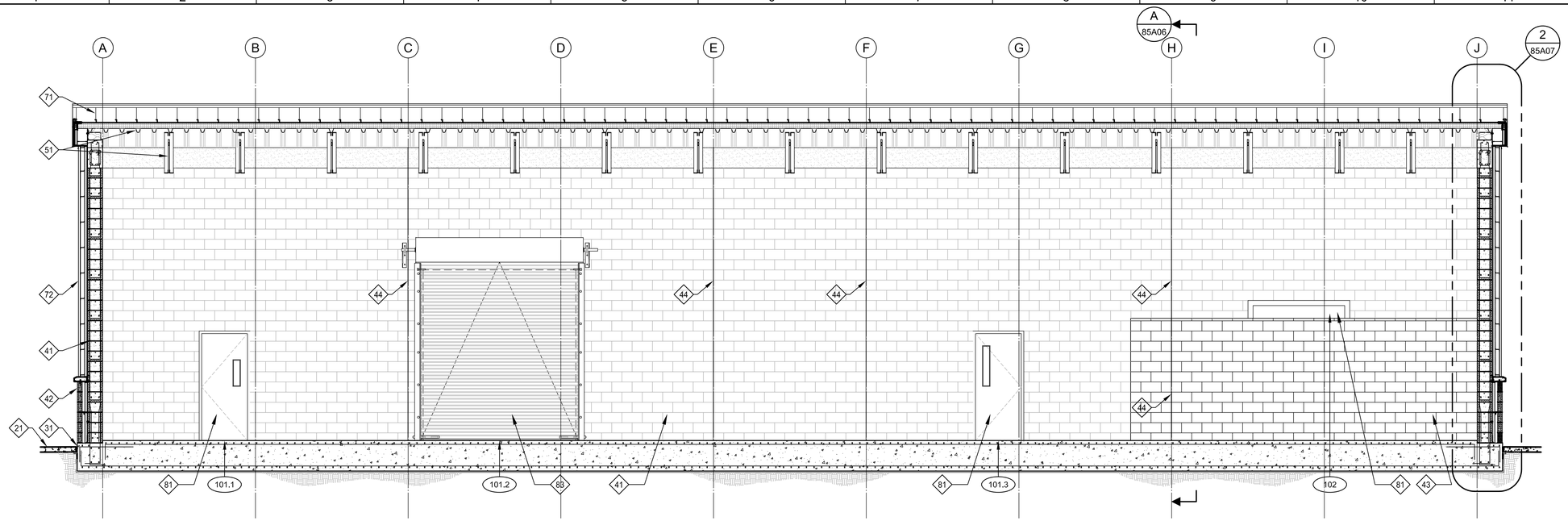

B BUILDING SECTION B

SCALE: 1/4"=1'-0"
FILE: 10296A1085A302.dwg

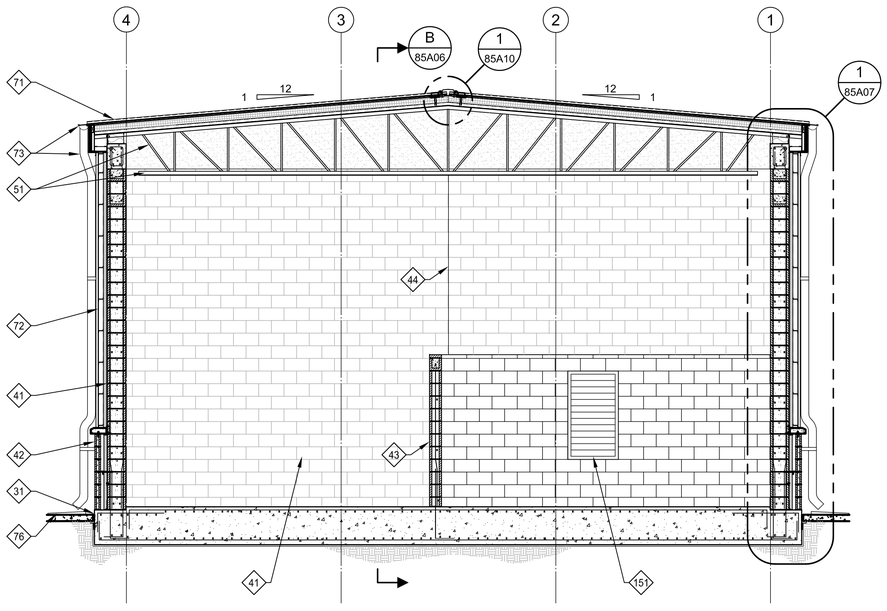

A BUILDING SECTION A

SCALE: 1/4"=1'-0"
FILE: 10296A1085A301.dwg

GENERAL NOTES

1. REFER TO ARCHITECTURAL SCHEDULES AND TYP DETAILS FOR ADDL INFO
2. REFER TO TYP ARCHITECTURAL DETAILS FOR ADDITIONAL INFORMATION RE: 00TA01-00TA08
3. KEY NOTE PREFIX CORRESPONDS TO SPEC DIVISION FOR EACH FACILITY: NOT ALL KEY NOTES ARE PERTINENT TO EVERY SHEET

KEY NOTES

- 21 ADJACENT PAVEMENT OR GRADE RE: C SERIES
- 31 CONCRETE STRUCTURE RE: S SERIES DWGS
- 32 CONCRETE CURB OR PAD OR WALL RE: S SERIES DWGS
- 41 CMU: 12-IN NOM BED WIDTH
- 42 CMU: 4-IN NOM BED WIDTH
- 43 CMU: 8-IN NOM BED WIDTH
- 44 MASONRY CONTROL JOINT
- 45 CAST STONE WAINSCOT CAP
- 51 STRUCT STEEL FRAME AND DECK RE: S SERIES DWGS
- 61 WOOD BLOCKING
- 71 ROOF ASSEMBLY OR ACCESSORY
- 72 EXTERIOR WALL PANEL OR ACCESSORY
- 73 GUTTER AND DOWNSPOUT SYSTEM
- 74 FOAMED-IN-PLACE MASONRY INSULATION
- 75 BATT INSULATION FULL WIDTH OF STUD CAVITY
- 76 SHEET MOISTURE BARRIER
- 77 PRECAST CONCRETE SPLASH PAD
- 81 SCHEDULED DOOR RE: DOOR SCHEDULE
- 83 SCHEDULED OVERHEAD COILING DOOR RE: DOOR SCHEDULE
- 92 GYPSUM BOARD, FRAMING OR ACCESSORY
- 99 PAINTED SURFACE RE: FINISH SCHEDULE
- 101 BUILDING SIGNAGE
- 102 FIRE EXTINGUISHER - SURFACE MOUNTED RE: 1/00TA08
- 151 HVAC EQUIPMENT OR ACCESSORY RE: H SERIES DWGS
- 161 ELECTRICAL EQUIPMENT OR ACCESSORY RE: E SERIES DWGS

THIS CONFORMED DOCUMENT IS RELEASED FOR THE CONVENIENCE OF THE CONTRACTOR UNDER THE AUTHORITY OF:

11-01-22

DAVID NEGRETE, R.A. DATE
TX LIC NO. 11640

SEE DISCLAIMER FOR LIMITATIONS OF USE.

CONTRACT DOCUMENTS DATED JUNE 10, 2022, AS PART OF THE BIDDING DOCUMENTS (DRAWINGS AND SPECIFICATIONS) AND SUBSEQUENTLY ISSUED ADDENDA HAVE BEEN MERGED INTO ONE CONFORMING SET OF DOCUMENTS FOR THE CONVENIENCE OF THE CONTRACTOR. IF INCONSISTENCIES OR AMBIGUITIES BETWEEN "CONFORMED" DOCUMENTS AND CONTRACT DOCUMENTS ARE FOUND, THE CONTRACT DOCUMENTS SHALL GOVERN.

REV	DATE	BY	DESCRIPTION
			CONFORMED DOCUMENTS

DESIGNED JTG
DRAWN JTG
CHECKED JTG
DATE NOVEMBER 2022

** ORIGINAL SEALED BY DAVID NEGRETE 06-10-22 TX RA 11640 **

NEGRETE & KOLAR ARCHITECTS,LLP
11720 NORTH IH 35, AUSTIN TEXAS 78753 P: 512.474.6526
carollo TBPELS No. F-882
CITY OF AUSTIN FOUNDED 1839 CITY OF AUSTIN

CITY OF AUSTIN
WILD HORSE RANCH WWTP EXPANSION
ARCHITECTURAL
SUBSTATION NO. 1
BUILDING SECTIONS A & B

VERIFY SCALES
BAR IS ONE INCH ON ORIGINAL DRAWING
0 1"
IF NOT ONE INCH ON THIS SHEET, ADJUST SCALES ACCORDINGLY

JOB NO. 10976A.00
DRAWING NO. 85A06
SHEET NO. 295 OF 464

LAST SAVED BY: Jason.George
PROJECT NO. 10976A10 FILE NAME: 10976A1085A06.dwg

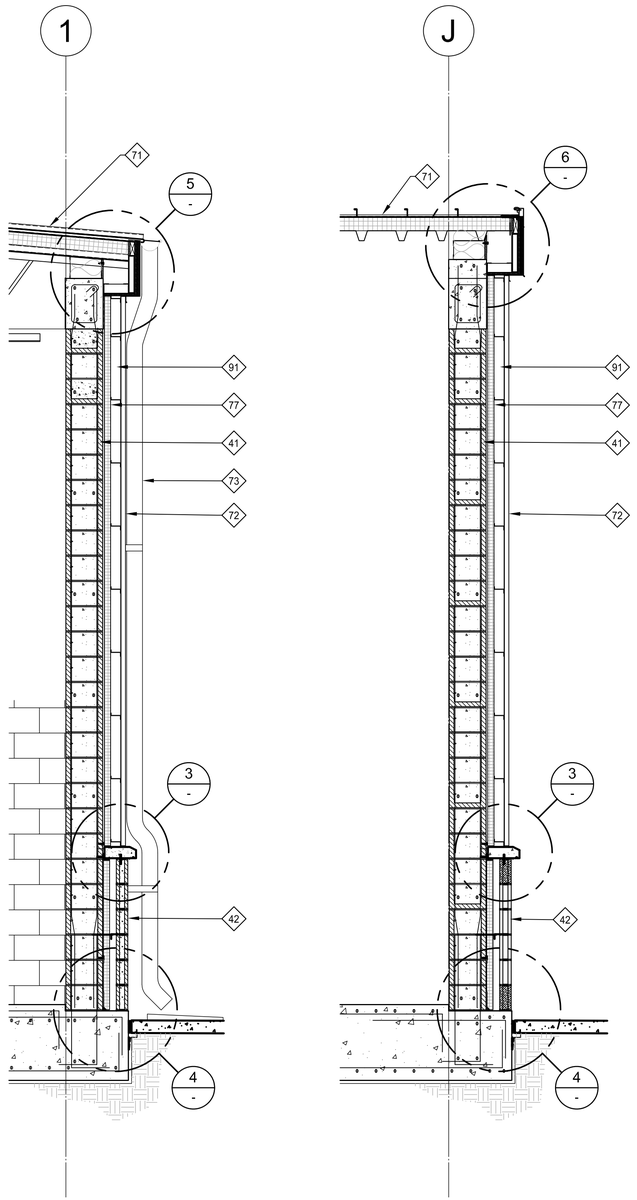

1 **WALL SECTION**
SCALE: 1/2"=1'-0"
FILE: 10296A1085A301.dwg

2 **WALL SECTION**
SCALE: 1/2"=1'-0"
FILE: 10296A1085A302.dwg

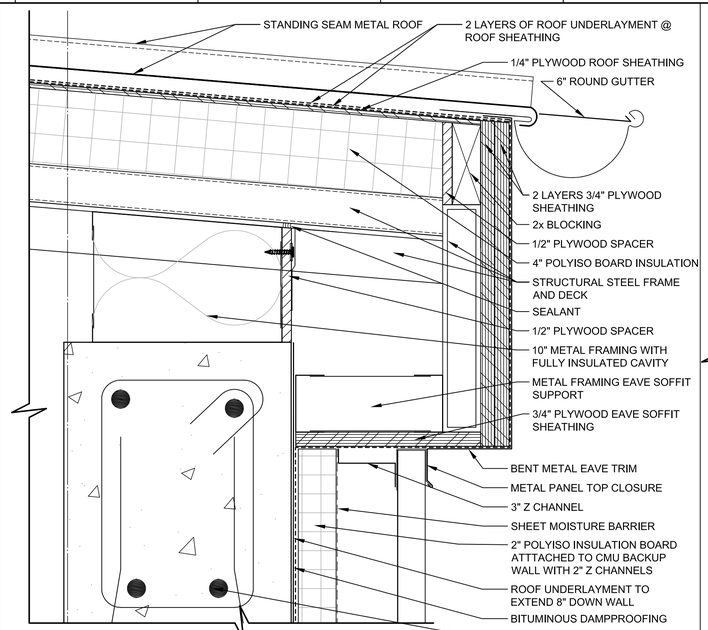

5 **ROOF EAVE DETAIL**
SCALE: 3"=1'-0"
FILE: 10296A1085A301.dwg

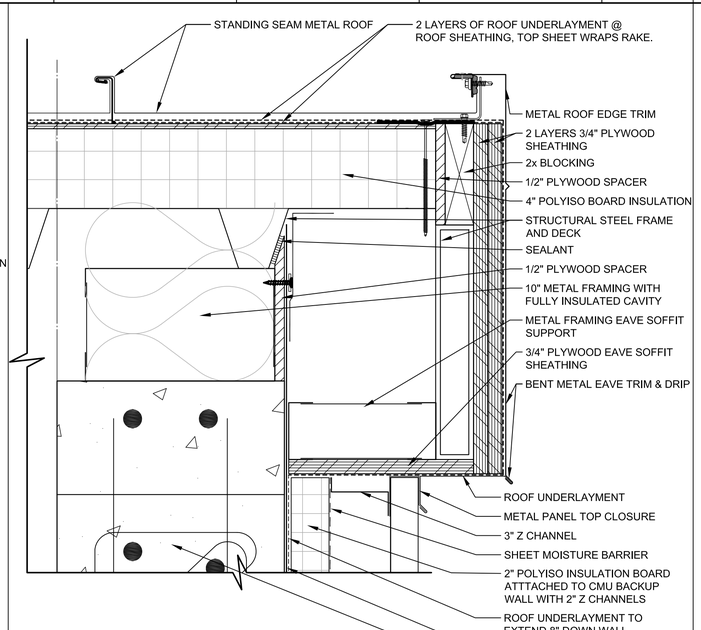

6 **ROOF RAKE DETAIL**
SCALE: 3"=1'-0"
FILE: 10296A1085A302.dwg

GENERAL NOTES

1. REFER TO ARCHITECTURAL SCHEDULES AND TYP DETAILS FOR ADDL INFO
2. REFER TO TYP ARCHITECTURAL DETAILS FOR ADDITIONAL INFORMATION RE: 00TA01-00TA08
3. KEY NOTE PREFIX CORRESPONDS TO SPEC DIVISION FOR EACH FACILITY: NOT ALL KEY NOTES ARE PERTINENT TO EVERY SHEET

KEY NOTES

- 21 ADJACENT PAVEMENT OR GRADE RE: C SERIES
- 31 CONCRETE STRUCTURE RE: S SERIES DWGS
- 32 CONCRETE CURB OR PAD OR WALL RE: S SERIES DWGS
- 41 CMU: 12-IN NOM BED WIDTH
- 42 CMU: 4-IN NOM BED WIDTH
- 43 CMU: 8-IN NOM BED WIDTH
- 44 MASONRY CONTROL JOINT
- 45 CAST STONE WAINSCOT CAP
- 51 STRUCT STEEL FRAME AND DECK RE: S SERIES DWGS
- 61 WOOD BLOCKING
- 71 ROOF ASSEMBLY OR ACCESSORY
- 72 EXTERIOR WALL PANEL OR ACCESSORY
- 73 GUTTER AND DOWNSPOUT SYSTEM
- 74 FOAMED-IN-PLACE MASONRY INSULATION
- 75 BATT INSULATION FULL WIDTH OF STUD CAVITY
- 76 SHEET MOISTURE BARRIER
- 77 PRECAST CONCRETE SPLASH PAD
- 81 SCHEDULED DOOR RE: DOOR SCHEDULE
- 83 SCHEDULED OVERHEAD COILING DOOR RE: DOOR SCHEDULE
- 92 GYPSUM BOARD, FRAMING OR ACCESSORY
- 99 PAINTED SURFACE RE: FINISH SCHEDULE
- 101 BUILDING SIGNAGE
- 102 FIRE EXTINGUISHER - SURFACE MOUNTED RE: 1/00TA08
- 151 HVAC EQUIPMENT OR ACCESSORY RE: H SERIES DWGS
- 161 ELECTRICAL EQUIPMENT OR ACCESSORY RE: E SERIES DWGS

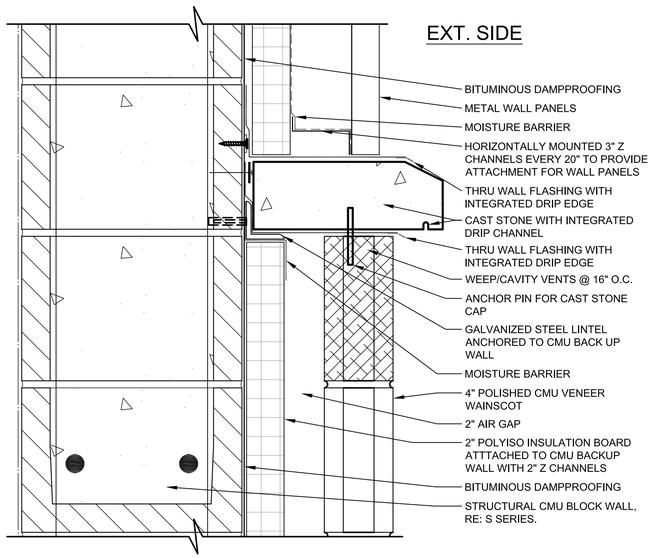

3 **CAST STONE CAP DETAIL**
SCALE: 3"=1'-0"
FILE: 10296A1085A302.dwg

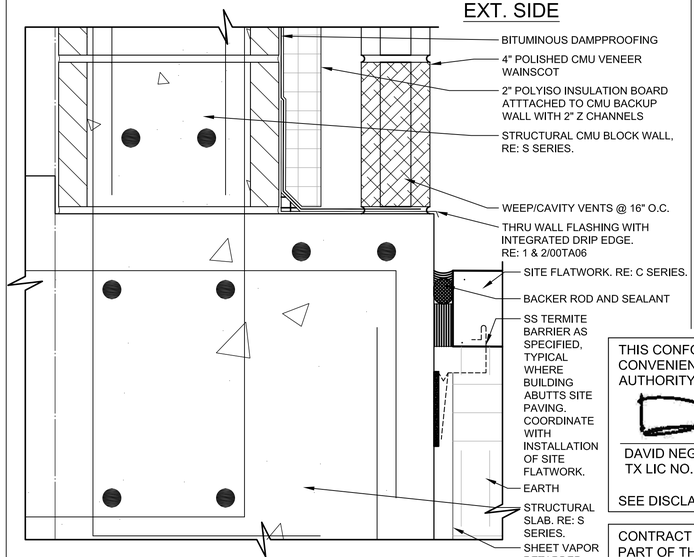

4 **WALL SILL DETAIL**
SCALE: 3"=1'-0"
FILE: 10296A1085A302.dwg

THIS CONFORMED DOCUMENT IS RELEASED FOR THE CONVENIENCE OF THE CONTRACTOR UNDER THE AUTHORITY OF:

DAVID NEGRETE, R.A. — 11-01-22
TX LIC NO. 11640 — DATE

SEE DISCLAIMER FOR LIMITATIONS OF USE.

CONTRACT DOCUMENTS DATED JUNE 10, 2022, AS PART OF THE BIDDING DOCUMENTS (DRAWINGS AND SPECIFICATIONS) AND SUBSEQUENTLY ISSUED ADDENDA HAVE BEEN MERGED INTO ONE CONFORMING SET OF DOCUMENTS FOR THE CONVENIENCE OF THE CONTRACTOR. IF INCONSISTENCIES OR AMBIGUITIES BETWEEN "CONFORMED" DOCUMENTS AND CONTRACT DOCUMENTS ARE FOUND, THE CONTRACT DOCUMENTS SHALL GOVERN.

REV	DATE	BY	DESCRIPTION
			CONFORMED DOCUMENTS

DESIGNED JTG
DRAWN JTG
CHECKED JTG
DATE NOVEMBER 2022

** ORIGINAL SEALED BY DAVID NEGRETE 06-10-22 TX RA 11640 **

NEGRETE & KOLAR ARCHITECTS,LLP
11720 NORTH IH 35, AUSTIN TEXAS 78753 P: 512.474.6526

carollo® TBPELS No. F-882

CITY OF AUSTIN — FOUNDED 1839

CITY OF AUSTIN

CITY OF AUSTIN
WILD HORSE RANCH WWTP EXPANSION
ARCHITECTURAL
SUBSTATION NO.1
WALL SECTIONS & DETAILS

VERIFY SCALES
BAR IS ONE INCH ON ORIGINAL DRAWING
0 1"
IF NOT ONE INCH ON THIS SHEET, ADJUST SCALES ACCORDINGLY

JOB NO. 10976A.00
DRAWING NO. 85A07
SHEET NO. 296 OF 464

LAST SAVED BY: Jason.George

PROJECT NO. 10976A10 FILE NAME: 10976A1085A07.dwg

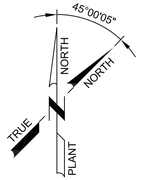

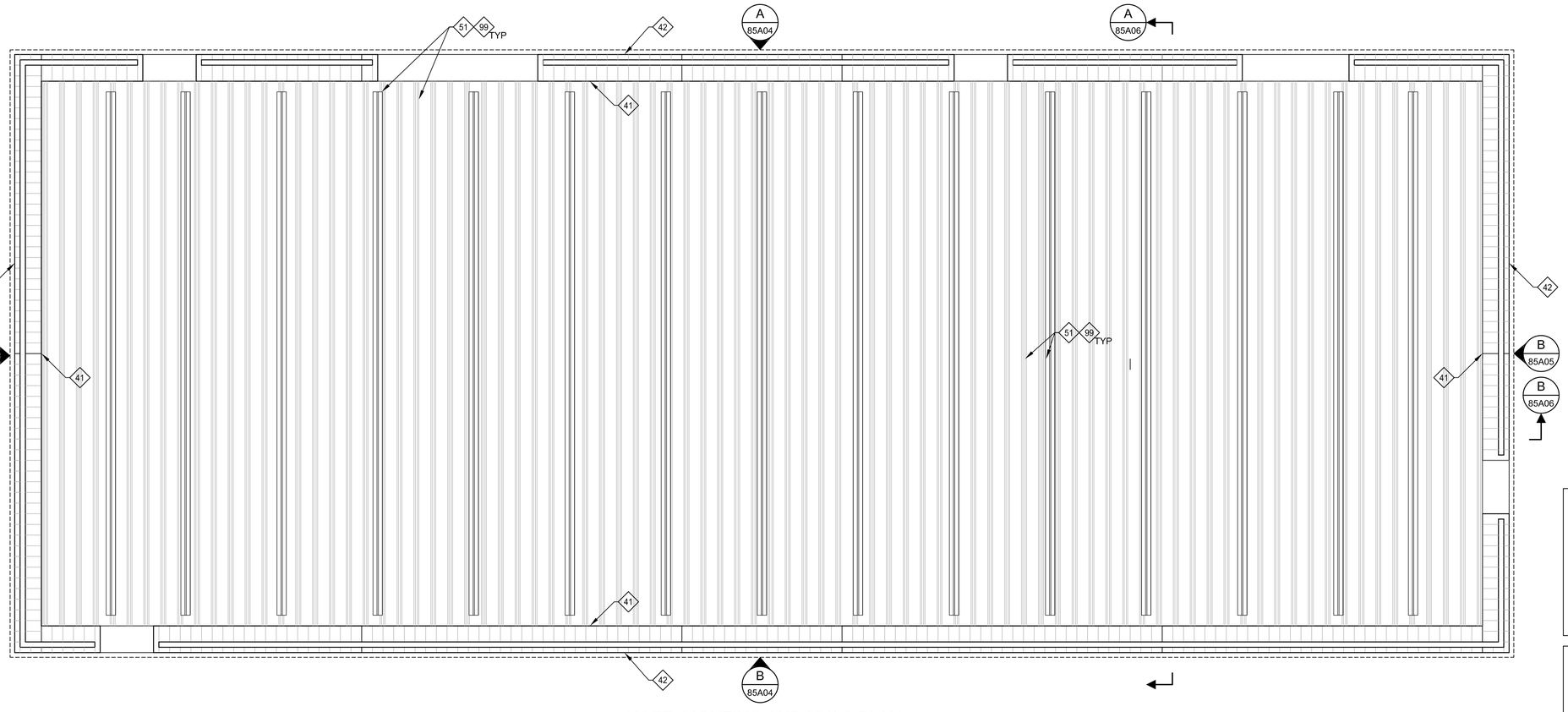

GENERAL NOTES

1. REFER TO ARCHITECTURAL SCHEDULES AND TYP DETAILS FOR ADDL INFO
2. REFER TO TYP ARCHITECTURAL DETAILS FOR ADDITIONAL INFORMATION RE: 00TA01-00TA08
3. KEY NOTE PREFIX CORRESPONDS TO SPEC DIVISION FOR EACH FACILITY: NOT ALL KEY NOTES ARE PERTINENT TO EVERY SHEET

KEY NOTES

- 21 ADJACENT PAVEMENT OR GRADE RE: C SERIES
- 31 CONCRETE STRUCTURE RE: S SERIES DWGS
- 32 CONCRETE CURB OR PAD OR WALL RE: S SERIES DWGS
- 41 CMU: 12-IN NOM BED WIDTH
- 42 CMU: 4-IN NOM BED WIDTH
- 43 CMU: 8-IN NOM BED WIDTH
- 44 MASONRY CONTROL JOINT
- 45 CAST STONE WAINSCOT CAP
- 51 STRUCT STEEL FRAME AND DECK RE: S SERIES DWGS
- 61 WOOD BLOCKING
- 71 ROOF ASSEMBLY OR ACCESSORY
- 72 EXTERIOR WALL PANEL OR ACCESSORY
- 73 GUTTER AND DOWNSPOUT SYSTEM
- 74 FOAMED-IN-PLACE MASONRY INSULATION
- 75 BATT INSULATION FULL WIDTH OF STUD CAVITY
- 76 SHEET MOISTURE BARRIER
- 77 PRECAST CONCRETE SPLASH PAD
- 81 SCHEDULED DOOR RE: DOOR SCHEDULE
- 83 SCHEDULED OVERHEAD COILING DOOR RE: DOOR SCHEDULE
- 92 GYPSUM BOARD, FRAMING OR ACCESSORY
- 99 PAINTED SURFACE RE: FINISH SCHEDULE
- 101 BUILDING SIGNAGE
- 102 FIRE EXTINGUISHER - SURFACE MOUNTED RE: 1/00TA08
- 151 HVAC EQUIPMENT OR ACCESSORY RE: H SERIES DWGS
- 161 ELECTRICAL EQUIPMENT OR ACCESSORY RE: E SERIES DWGS

THIS CONFORMED DOCUMENT IS RELEASED FOR THE CONVENIENCE OF THE CONTRACTOR UNDER THE AUTHORITY OF:

11-01-22

DAVID NEGRETE, R.A. DATE
TX LIC NO. 11640

SEE DISCLAIMER FOR LIMITATIONS OF USE.

CONTRACT DOCUMENTS DATED JUNE 10, 2022, AS PART OF THE BIDDING DOCUMENTS (DRAWINGS AND SPECIFICATIONS) AND SUBSEQUENTLY ISSUED ADDENDA HAVE BEEN MERGED INTO ONE CONFORMING SET OF DOCUMENTS FOR THE CONVENIENCE OF THE CONTRACTOR. IF INCONSISTENCIES OR AMBIGUITIES BETWEEN "CONFORMED" DOCUMENTS AND CONTRACT DOCUMENTS ARE FOUND, THE CONTRACT DOCUMENTS SHALL GOVERN.

NOTE: LIGHTING AND HVAC PLAN CAN BE FOUND IN THE E AND H SERIES OF DRAWINGS.

A REFLECTED CEILING PLAN - SUBSTATION NO. 1

SCALE: 1/4"=1'-0"
FILE: 10976A1085A101.dwg

REV	DATE	BY	DESCRIPTION
			CONFORMED DOCUMENTS

DESIGNED JTG
DRAWN JTG
CHECKED JTG
DATE NOVEMBER 2022

** ORIGINAL SEALED BY DAVID NEGRETE 06-10-22 TX RA 11640 **

NEGRETE & KOLAR ARCHITECTS,LLP
11720 NORTH IH 35, AUSTIN TEXAS 78753 P: 512.474.6526
carollo TBPELS No. F-882

CITY OF AUSTIN

CITY OF AUSTIN
WILD HORSE RANCH WWTP EXPANSION
ARCHITECTURAL
SUBSTATION NO. 1
REFLECTED CEILING PLAN

VERIFY SCALES
BAR IS ONE INCH ON ORIGINAL DRAWING
0 1"
IF NOT ONE INCH ON THIS SHEET, ADJUST SCALES ACCORDINGLY

JOB NO. 10976A.00
DRAWING NO. 85A08
SHEET NO. 297 OF 464

LAST SAVED BY: Jason.George

PROJECT NO. 10976A10 FILE NAME: 10976A1085A08.dwg

CMU NOTES

1. EXTERIOR CMU THIS STRUCTURE: POLISHED FACE, TYPICAL WITH MANUFACTURER SPECIFIED SEALER
2. EXTERIOR CMU BEHIND METAL PANEL: SMOOTH FACE WITH DAMPPROOFING PER 07110
3. CUT STARTER COURSE AS REQUIRED AT INTERIOR WALL TO ACHIEVE SCHEDULED HEIGHT
4. RE: STRUCTURAL FOR REINFORCING

CONC FINISH SCHED

1. ALL EXTERIOR CONCRETE SURFACES THIS FACILITY TO RECEIVE A BROOM FINISH
2. ALL INTERIOR CONCRETE SURFACES THIS FACILITY TO RECEIVE A STEEL TROWEL FINISH

RE: SPECIFICATION 03350 FOR ADDL INFO

INSULATION SCHEDULE

LOCATION	TYPE	R-VAL
METAL ROOF	POLYISOCYANURATE INSULATION BOARD – RE: 07212	4" R-26 MIN.
EXTERIOR WALLS	POLYISOCYANURATE INSULATION BOARD – RE: 07212	2" R-13 MIN.
EXTERIOR WALLS AT ROOF	BATT INSULATION – RE: 07213	3-1/2" R-13 MIN.

DOOR TYPES

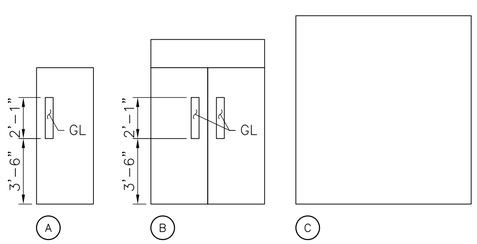

NOTES

1. SEE SCHEDULE FOR REQD LOCATIONS
2. SEE SCHEDULE FOR FRAME SIZE, MATERIAL, AND DETAIL REFERENCES
3. PROVIDE LABELED DOORS PER DOOR SCHEDULE
4. GLASS AT DOORS SHALL BE TEMPERED
5. GLASS AT EXTERIOR DOORS SHALL BE TINTED

DOOR FRAME TYPES

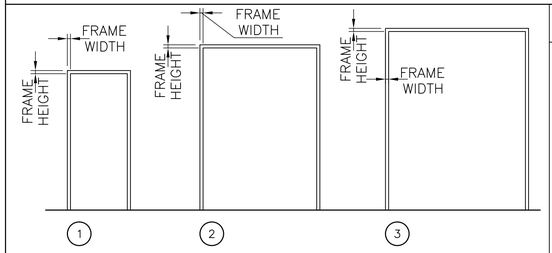

NOTES

1. RE: DOOR SCHEDULE FOR LOCATIONS REQD
2. RE: DOOR SCHEDULE FOR FRAME SIZE, MATERIAL, AND DETAIL REFERENCES
3. VERIFY ALL FRAME SIZES AND ROUGH OPENING REQUIREMENTS PRIOR TO FABRICATION

ABBREVIATIONS

CR	CARD READER
HM	HOLLOW METAL
ALUM	ALUMINUM PANEL
DC	DOOR CONTACT MONITOR
PF	PREFINISHED – FACTORY APPLIED
PNT	PAINT – RE: 09902

DOOR NOTES

1. RE: DIVISION-8 SPECIFICATIONS FOR ADDITIONAL INFORMATION
2. SCHEDULED ACCESS CONTROL FUNCTIONS TO BE VERIFIED WITH SECURITY PACKAGE
3. RE: ABBREVIATIONS LEGEND THIS SHEET.

DOOR AND HARDWARE SCHEDULE

DOOR NO	DOOR (RE: THIS SHEET)						FRAME (RE: THIS SHEET)						DETAILS (RE: 00TA05)			HARDWARE GROUP	FIRE LABEL	ACCESS CONTROL	REMARKS	DOOR NO
	WIDTH	HEIGHT	THICK	TYPE	MATL	FINISH	WIDTH	HEIGHT	THICK	TYPE	MATL	FINISH	HEAD	JAMB	SILL					
E101.1	3'0"	7'0"	1.75	A	HM	PNT	2"	2"	8"	1	HM	PNT	G/AJ105	C/AJ107	E/AJ109	C715	--	CR, DC	--	E101.1
E101.2	10'0"	11'0"	--	C	STL	PNT	--	--	--	3	STL	PNT	2/85A10	2/85A10	2/85A10	D001	--	DC	OVERHEAD COILING DOOR, RE: 08330	E101.2
E101.3	3'0"	7'0"	1.75	A	HM	PNT	2"	2"	8"	1	HM	PNT	G/AJ105	C/AJ107	E/AJ109	C715	--	CR, DC	--	E101.3
E101.4	3'0"	7'0"	1.75	A	HM	PNT	2"	2"	8"	1	HM	PNT	G/AJ105	C/AJ107	E/AJ109	C715	--	CR, DC	--	E101.4
E101.5	3'0"	7'0"	1.75	A	HM	PNT	2"	2"	8"	1	HM	PNT	G/AJ105	C/AJ107	E/AJ109	C715	--	CR, DC	--	E101.5
E102	6'0"	7'0"	1.75	B	HM	PNT	2"	4"	8"	2	HM	PNT	G/AJ105	C/AJ107	E/AJ109	C714M	--	--	REMOVABLE 6'x2' TRANSOM	E102
E20PD	3'0"	7'0"	1.75	A	HM	PNT	2"	2"	8"	1	HM	PNT	D/AJ105	D/AJ107	E/AJ109	C715	--	CR, DC	LOCATED AT ADJACENT HEAD WORKS STRUCTURE	E20PD
E20PD	14'0"	12'6"	--	--	--	--	--	--	--	--	--	--	2/85A10	2/85A10	2/85A10	D001	--	DC	LOCATED AT ADJACENT HEAD WORKS STRUCTURE	E20RUD

ABBREVIATIONS

CONC	CONCRETE
CMU	CONCRETE MASONRY UNITS
PM	SEE PROCESS MECH DWGS FOR COATING
PNT	PAINT – RE: 09902
SC	SEALED CONCRETE
RUB	RUBBED CONCRETE FINISH

RM FINISH NOTES

1. RE: CONCRETE FINISHES SPECIFICATION FOR ADDITIONAL INFORMATION
2. RE: ABBREVIATIONS LEGEND THIS SHEET

ROOM FINISH SCHEDULE

ROOM NO	ROOM NAME	FLOOR		BASE	NORTH WALL		SOUTH WALL		EAST WALL		WEST WALL		CEILING			REMARKS	ROOM NO
		MATL	FINISH	MATL	MATL	FINISH	MATL	FINISH	MATL	FINISH	MATL	FINISH	MATL	HEIGHT	FINISH		
101	ELECTRICAL ROOM	CONC	SC	--	CMU	PNT	CMU	PNT	CMU	PNT	CMU	PNT	STRUCT	RE: BUILDING SECTIONS	PNT	--	101
102	HVAC ROOM	CONC	SC	--	CMU	PNT	CMU	PNT	CMU	PNT	CMU	PNT	STRUCT	RE: BUILDING SECTIONS	PNT	--	102

SIGNAGE SCHEDULE

LOCATION	TYPE	SIZE	TEXT	NOTES
NORTH ELEVATION	C	12" H	S1	
SOUTH ELEVATION	C	12" H	S1	
DOOR 101.1	B	10"x14"	NOTICE: BY ORDER OF THE AUSTIN FIRE DEPARTMENT THIS ROOM SHALL NOT BE USED FOR STORAGE OF ANY KIND OR FOR ANY DURATION	LOCATION: INTERIOR SIDE OF DOOR
DOOR 101.3	B	10"x14"	NOTICE: BY ORDER OF THE AUSTIN FIRE DEPARTMENT THIS ROOM SHALL NOT BE USED FOR STORAGE OF ANY KIND OR FOR ANY DURATION	LOCATION: INTERIOR SIDE OF DOOR
DOOR 101.4	B	10"x14"	NOTICE: BY ORDER OF THE AUSTIN FIRE DEPARTMENT THIS ROOM SHALL NOT BE USED FOR STORAGE OF ANY KIND OR FOR ANY DURATION	LOCATION: INTERIOR SIDE OF DOOR
DOOR 101.5	B	10"x14"	NOTICE: BY ORDER OF THE AUSTIN FIRE DEPARTMENT THIS ROOM SHALL NOT BE USED FOR STORAGE OF ANY KIND OR FOR ANY DURATION	LOCATION: INTERIOR SIDE OF DOOR
DOOR 102	A	6"x8"	HVAC ROOM	EXTERIOR LOCATION

THIS CONFORMED DOCUMENT IS RELEASED FOR THE CONVENIENCE OF THE CONTRACTOR UNDER THE AUTHORITY OF:

DAVID NEGRETE, R.A. 11-01-22
TX LIC NO. 11640 DATE

SEE DISCLAIMER FOR LIMITATIONS OF USE.

CONTRACT DOCUMENTS DATED JUNE 10, 2022, AS PART OF THE BIDDING DOCUMENTS (DRAWINGS AND SPECIFICATIONS) AND SUBSEQUENTLY ISSUED ADDENDA HAVE BEEN MERGED INTO ONE CONFORMING SET OF DOCUMENTS FOR THE CONVENIENCE OF THE CONTRACTOR. IF INCONSISTENCIES OR AMBIGUITIES BETWEEN "CONFORMED" DOCUMENTS AND CONTRACT DOCUMENTS ARE FOUND, THE CONTRACT DOCUMENTS SHALL GOVERN.

REV	DATE	BY	DESCRIPTION
			CONFORMED DOCUMENTS

DESIGNED JTG
DRAWN JTG
CHECKED JTG
DATE NOVEMBER 2022

** ORIGINAL SEALED BY DAVID NEGRETE 06-10-22 TX RA 11640 **

NEGRETE & KOLAR ARCHITECTS,LLP
11720 NORTH IH 35, AUSTIN TEXAS 78753 P: 512.474.6526

carollo
TBPELS No. F-882

CITY OF AUSTIN

CITY OF AUSTIN
WILD HORSE RANCH WWTP EXPANSION
ARCHITECTURAL
SUBSTATION NO. 1 SCHEDULES

VERIFY SCALES
BAR IS ONE INCH ON ORIGINAL DRAWING
0 1"
IF NOT ONE INCH ON THIS SHEET, ADJUST SCALES ACCORDINGLY

JOB NO. 10976A.00
DRAWING NO. 85A09
SHEET NO. 298 OF 464

LAST SAVED BY: Jason.George

PROJECT NO. 10976A10 FILE NAME: 10976A1085A09.dwg

THIS CONFORMED DOCUMENT IS RELEASED FOR THE CONVENIENCE OF THE CONTRACTOR UNDER THE AUTHORITY OF:

11-01-22

DAVID NEGRETE, R.A. DATE
TX LIC NO. 11640

SEE DISCLAIMER FOR LIMITATIONS OF USE.

CONTRACT DOCUMENTS DATED JUNE 10, 2022, AS PART OF THE BIDDING DOCUMENTS (DRAWINGS AND SPECIFICATIONS) AND SUBSEQUENTLY ISSUED ADDENDA HAVE BEEN MERGED INTO ONE CONFORMING SET OF DOCUMENTS FOR THE CONVENIENCE OF THE CONTRACTOR. IF INCONSISTENCIES OR AMBIGUITIES BETWEEN "CONFORMED" DOCUMENTS AND CONTRACT DOCUMENTS ARE FOUND, THE CONTRACT DOCUMENTS SHALL GOVERN.

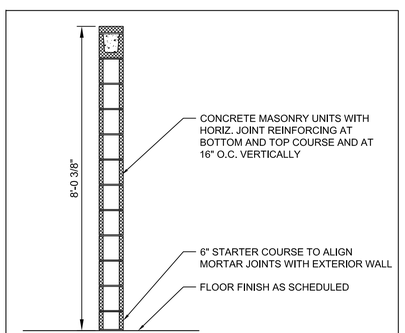

A CMU NON RATED

PARTITION TYPES

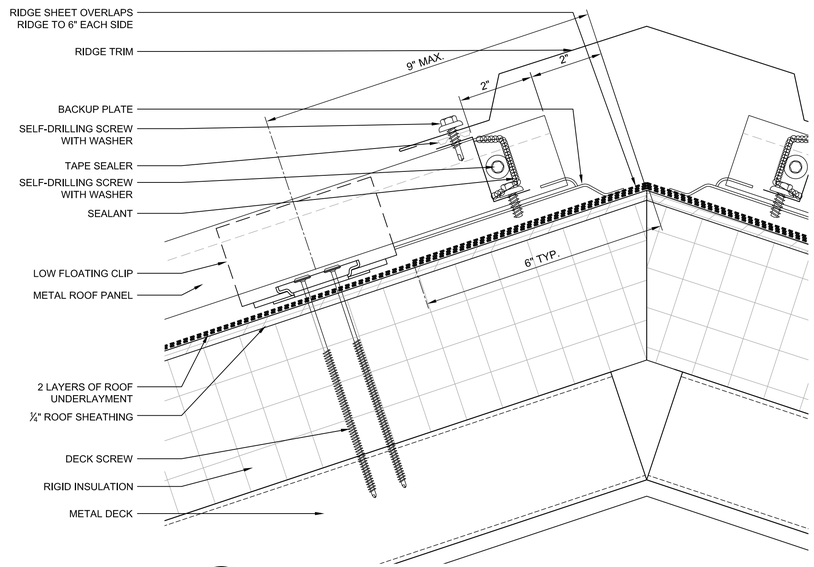

1 85A10 **ROOF RIDGE CAP DETAIL**
SCALE: 6" = 1'-0"
FILE: 10296A1085A301.dwg

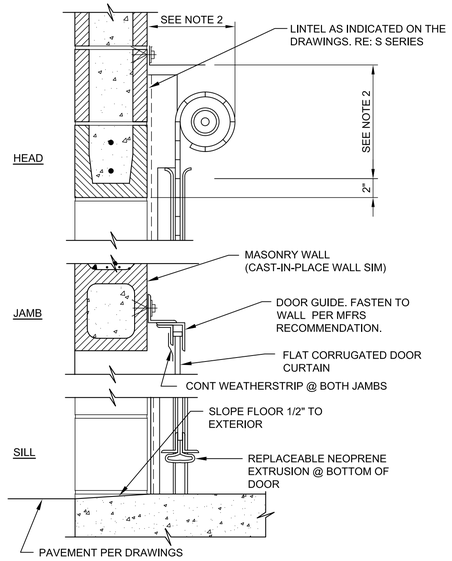

NOTES:
1. SEE DRAWINGS FOR OPERATOR TYPE AND LOCATION.
2. DIM VARIES WITH MFR. SEE SHOP DWGS FOR ACTUAL SIZE.

2 85A10 **OVERHEAD COILING DOOR SIM DETAILS**
SCALE: 1 1/2" = 1'-0"
FILE: 920.dwg

REV	DATE	BY	DESCRIPTION
			CONFORMED DOCUMENTS

DESIGNED JTG
DRAWN JTG
CHECKED JTG
DATE NOVEMBER 2022

** ORIGINAL SEALED BY DAVID NEGRETE 06-10-22 TX RA 11640 **

NEGRETE & KOLAR ARCHITECTS,LLP
11720 NORTH IH 35. AUSTIN TEXAS 78753 P: 512.474.6526

carollo
TBPELS No. F-882

CITY OF AUSTIN
FOUNDED 1839

CITY OF AUSTIN

CITY OF AUSTIN
WILD HORSE RANCH WWTP EXPANSION
ARCHITECTURAL
SUBSTATION NO. 1
PARTITION TYPES & DETAILS

VERIFY SCALES
BAR IS ONE INCH ON ORIGINAL DRAWING
0 1"
IF NOT ONE INCH ON THIS SHEET, ADJUST SCALES ACCORDINGLY

JOB NO. 10976A.00
DRAWING NO. 85A10
SHEET NO. 299 OF 464

LAST SAVED BY:. Jason.George

PROJECT NO. 10976A10 FILE NAME: 10976A1085A10.dwg

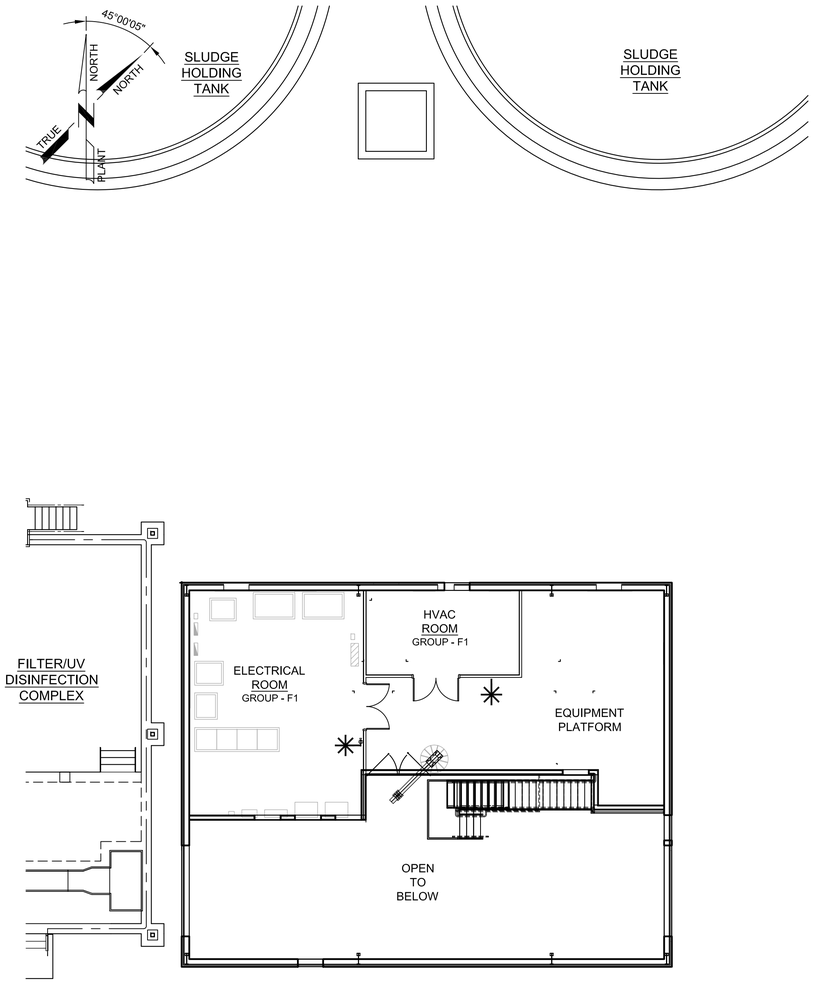

B VICINITY PLAN - ADMINSTRATION BUILDING AT EQUIPMENT PLATFORM

SCALE: 1"=10'-0"
FILE: 10976A1090A102.dwg

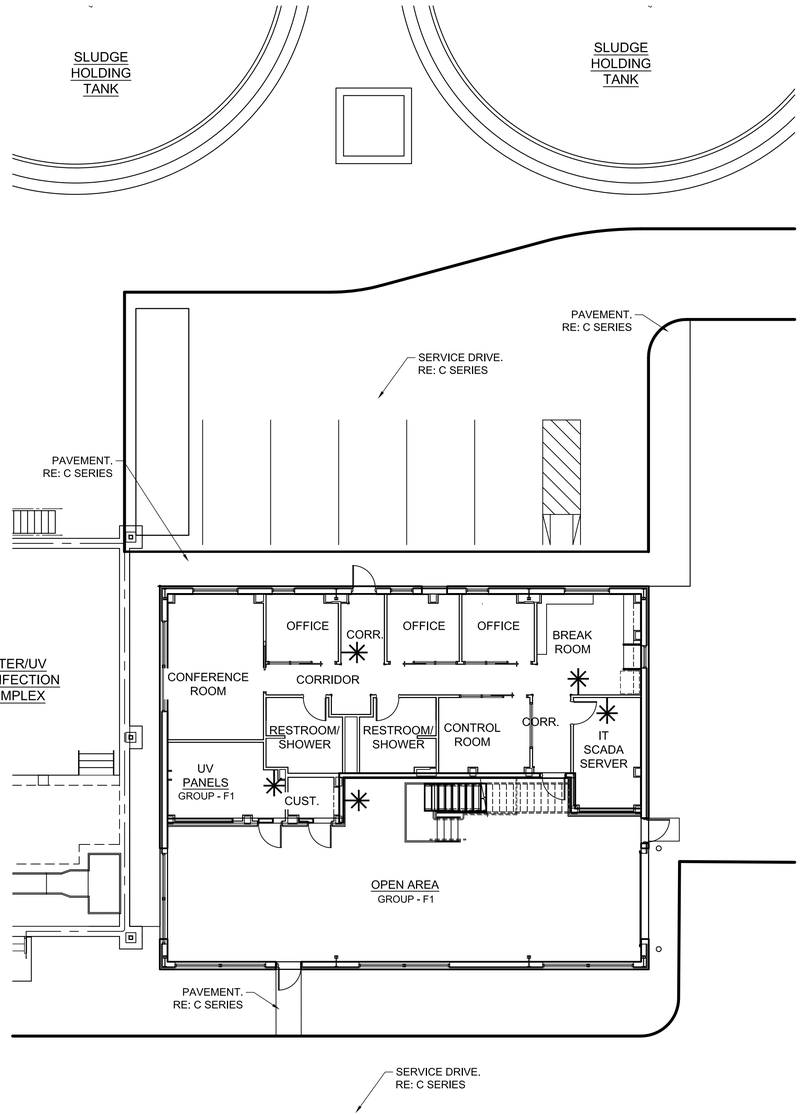

A VICINITY PLAN - ADMINSTRATION BUILDING AT LEVEL-1

SCALE: 1"=10'-0"
FILE: 10976A1090A101.dwg

BUILDING DATA

LEVEL-1:
3,277 SF - GROSS
GROUP B: 1,651 SF
GROUP F-1: 1,626 SF

EQUIPMENT PLATFORM:
1,846 SF - GROSS
GROUP F-1: 1,035 SF

TOTAL BUILDING FLOOR AREA:
5,123 SF - GROSS

OCCUPANT LOAD DATA

NOTE:
INFORMATION BELOW PER TABLE 1004.1.2 RELATIVE TO BUILDING DATA ABOVE

GROUP B:
* 1,651 SF - GROSS
* 1 OCCUPANT PER 100 SF
* OCCUPANT LOAD = 16.51

GROUP F-1:
* 2,661 SF - GROSS
* 1 OCCUPANT PER 300 SF
* OCCUPANT LOAD = 8.87

TOTAL OCCUPANT LOAD:
25.38 OCCUPANTS ≈ 26

PLUMBING FIXTURE DATA

NOTE:
INFORMATION BELOW PER 2015 UPC
RELATIVE TO OCCUPANT LOAD DATA ABOVE

TABLE 422.1:
* OFFICE OR PUBLIC BLDGS - EMPLOYEE USE
* INDUSTRIAL OCCUPANCY - EMPLOYEE USE

REQUIRED MALE FIXTURES:
1 TOILETS MIN. (1 PROVIDED)
1 URINALS MIN. (1 PROVIDED)
1 LAVATORIES MIN. (1 PROVIDED)
1 SHOWER PROVIDED (1 REQUIRED)

REQUIRED FEMALE FIXTURES:
1 TOILETS MIN. (1 PROVIDED)
1 LAVATORIES MIN. (1 PROVIDED)
1 SHOWER PROVIDED (1 REQUIRED)

REQUIRED DRINKING FOUNTAINS:
NOT REQUIRED AS PER 415.2 (≤30 OCC.), NONE PROVIDED.

ACCESSIBILITY NOTES

LEVEL ONE SPACES ARE DESIGNED FOR FULL ACCESSIBILITY

EQUIPMENT PLATFORM IS CONSIDERED "EMPLOYEE WORK AREA" AND DESIGNED FOR APPROACH-ENTRY-EXIT ONLY PER TAS 4.1.1(3)

BUILDING CODE REVIEW

NOTES:
* THIS REVIEW IS BASED UPON THE 2015 EDITION OF THE INTERNATIONAL BUILDING CODE
* ITEMS *ITALICIZED* REQUIRE DATA CONFIRMATION DURING DESIGN PHASE
* ITEMS UNDERLINED REQUIRE CONFIRMATION BY REGULATORY APPROVAL AUTHORITY

GENERAL INFORMATION:
* THIS BUILDING CONSISTS OF 1 STORY WITH AN EQUIPMENT PLATFORM
* THIS IS A NON-SPRINKLERED BUILDING

CHAPTER 3:
THIS IS A MIXED-OCCUPANCY BUILDING,
* GROUP B - TYPICAL
* GROUP F-1 - OPEN AREA & EQUIPMENT PLATFORM

CHAPTER 4:
NOT APPLICABLE

TABLE 504.3:
* ALL OCCUPANCIES WITHIN LIMITATIONS FOR TYPE-VB CONSTRUCTION: (BUILDING IS OF TYPE-VB CONSTRUCTION)

TABLE 508.4:
* NO SEPARATION REQUIRED BETWEEN GROUPS B & F-1

TABLE 601:
* THIS BUILDING COMPLIES WITH TYPE-VB CONSTRUCTION: TYPE-VB IS PROPOSED

TABLE 602:
* DISTANCE TO ASSUMED P.L. > 10'
* FIRE-RESISTANCE RATING NOT REQUIRED (ASSUMES TYPE-VB CONSTRUCTION)

CHAPTER 7:
NO COMMENTS

CHAPTER 8:
NO COMMENTS

CHAPTER 9:
FIRE-RESISTANCE RATING NOT REQUIRED

LEGEND

✳ FIRE EXTINGUISHER

THIS CONFORMED DOCUMENT IS RELEASED FOR THE CONVENIENCE OF THE CONTRACTOR UNDER THE AUTHORITY OF:

DAVID NEGRETE, R.A. — DATE 11-01-22
TX LIC NO. 11640

SEE DISCLAIMER FOR LIMITATIONS OF USE.

CONTRACT DOCUMENTS DATED JUNE 10, 2022, AS PART OF THE BIDDING DOCUMENTS (DRAWINGS AND SPECIFICATIONS) AND SUBSEQUENTLY ISSUED ADDENDA HAVE BEEN MERGED INTO ONE CONFORMING SET OF DOCUMENTS FOR THE CONVENIENCE OF THE CONTRACTOR. IF INCONSISTENCIES OR AMBIGUITIES BETWEEN "CONFORMED" DOCUMENTS AND CONTRACT DOCUMENTS ARE FOUND, THE CONTRACT DOCUMENTS SHALL GOVERN.

REV	DATE	BY	DESCRIPTION
			CONFORMED DOCUMENTS

DESIGNED JTG
DRAWN JTG
CHECKED JTG
DATE NOVEMBER 2022

** ORIGINAL SEALED BY DAVID NEGRETE 06-10-22 TX RA 11640 **

NEGRETE & KOLAR ARCHITECTS,LLP
11720 NORTH IH 35. AUSTIN TEXAS 78753 P: 512.474.6526
carollo TBPELS No. F-882

CITY OF AUSTIN
WILD HORSE RANCH WWTP EXPANSION
ARCHITECTURAL
ADMINISTRATION BUILDING CODE REVIEW DATA

VERIFY SCALES
BAR IS ONE INCH ON ORIGINAL DRAWING
0 1"
IF NOT ONE INCH ON THIS SHEET, ADJUST SCALES ACCORDINGLY

JOB NO. 10976A.00
DRAWING NO. 90A01
SHEET NO. 300 OF 464

LAST SAVED BY: Jason.George

PROJECT NO. 10976A10 FILE NAME: 10976A1090A01.dwg

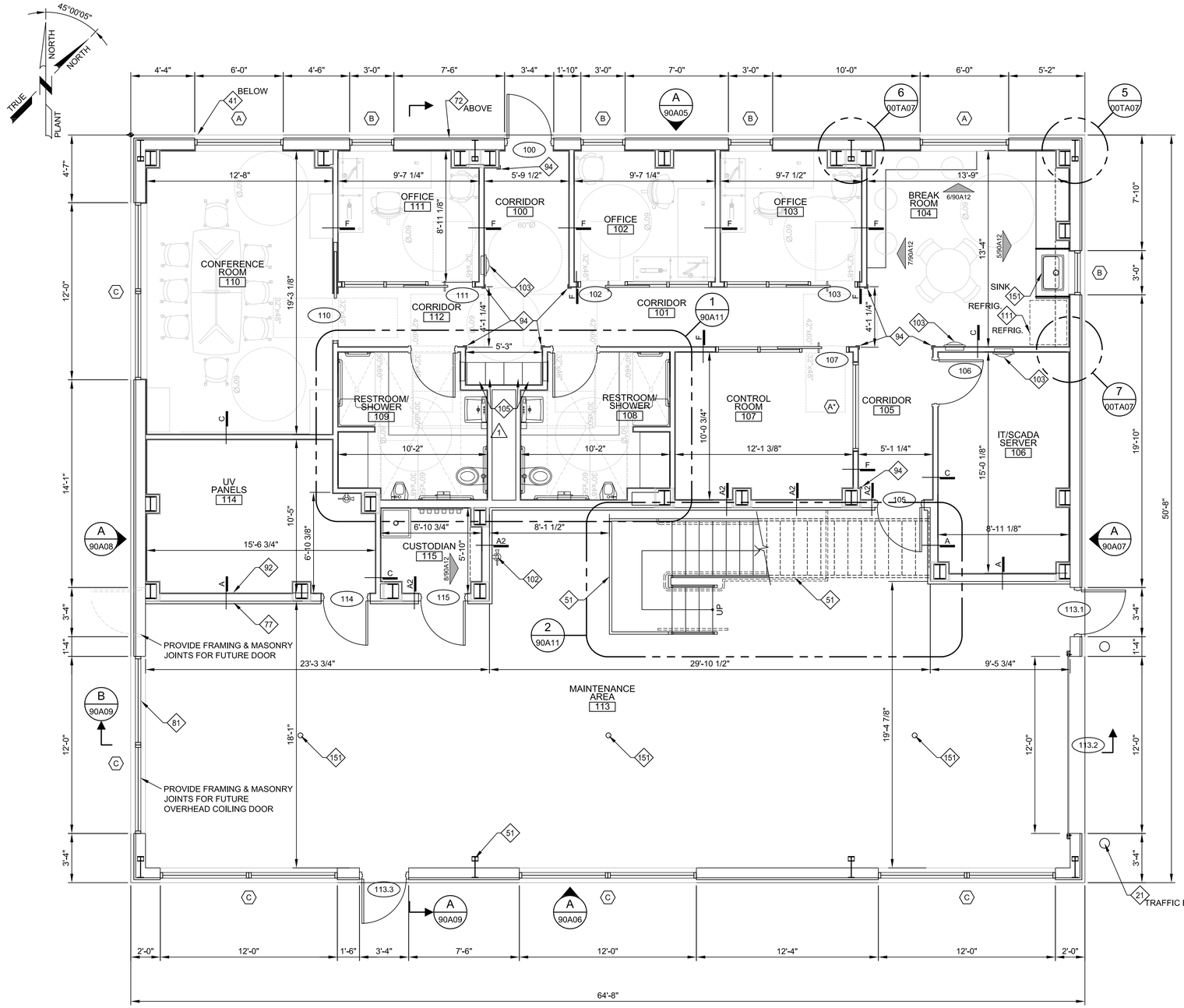

A PLAN - ADMINISTRATION BUILDING - LEVEL 1

SCALE: 1/4"=1'-0"
FILE: 10976A1090A101.dwg

LEGEND

(X) WINDOW TYPE; RE: SHEET 90A16 (XXX) DOOR TYPE; RE: SHEET 90A16 X PARTITION TYPE; RE: SHEET 90A17

FURNITURE NOTE

THE FURNITURE DEPICTED ON THIS SHEET (TABLES, CHAIRS, OFFICE FURNITURE) ARE SHOWN FOR SPACE PLANNING PURPOSES AND ARE NOT PART OF THIS CONTRACT. THE GRAY LINE WEIGHT INDICATES THAT THE FURNITURE IS NOT PART OF THE SCOPE OF THE DRAWINGS.

△1

GENERAL NOTES

1. REFER TO ARCHITECTURAL SCHEDULES AND TYP DETAILS FOR ADDL INFO
2. REFER TO TYP ARCHITECTURAL DETAILS FOR ADDITIONAL INFORMATION RE: 00TA01-00TA08
3. KEY NOTE PREFIX CORRESPONDS TO SPEC DIVISION FOR EACH FACILITY: NOT ALL KEY NOTES ARE PERTINENT TO EVERY SHEET

KEY NOTES

- 21 ADJACENT PAVEMENT OR GRADE RE: CIVIL
- 22 TRASH AND RECYCLING RECEPTICLES
- 31 CONCRETE STRUCTURE RE: S SERIES DWGS
- 32 CONCRETE CURB OR PAD OR WALL RE: S SERIES DWGS
- 41 CMU: 12-IN NOM BED WIDTH
- 42 CMU: 4-IN NOM BED WIDTH
- 43 CMU: 8-IN NOM BED WIDTH
- 44 MASONRY CONTROL JOINT
- 51 STRUCT STEEL FRAME AND DECK RE: S SERIES DWGS
- 52 STRUCT STEEL STAIR AND LANDING RE: S SERIES DWGS
- 61 WOOD BLOCKING
- 71 ROOF ASSEMBLY OR ACCESSORY
- 72 EXTERIOR WALL PANEL OR ACCESSORY
- 73 GUTTER AND DOWNSPOUT SYSTEM
- 74 FOAMED-IN-PLACE MASONRY INSULATION
- 75 BATT INSULATION FULL WIDTH AND DEPTH OF STUD CAVITY
- 76 POLYISO BOARD INSULATION
- 77 INTERIOR WALL METAL PANEL
- 78 PRE-ENGINEERED METAL BUILDING INSULATION SYSTEM
- 91 WATER REPELLANT TYP ON CMU AND SLOPED CONC SILL AS INDICATED
- 92 GYPSUM WALL BOARD
- 93 CERAMIC WALL TILE
- 94 SS 48" CORNER GUARDS MOUNTED 12" FROM FLOOR
- 95 ACOUSTICAL PANEL CEILING
- 96 FLUID-APPLIED FLOOR COVERING AT SCORED TRANSITION FROM PC.
- 97 RESILIENT WALL BASE
- 101 BUILDING SIGNAGE
- 102 FIRE EXTINGUISHER - SURFACE MOUNTED RE: 1/00TA08
- 103 FIRE EXTINGUISHER & CABINET
- 105 METAL LOCKER △1
- 106 DEMOUNTABLE PARTITION & SLIDING DOOR
- 108 TOILET, BATH OR LAUNDRY ACCESSORY
- 140 EQUIPMENT DAVIT: FLOOR MOUNTED
- 151 PLUMBING FIXTURE OR ACCESSORY. RE: P SERIES
- 152 HVAC EQUIPMENT OR ACCESSORY. RE: H SERIES
- 161 ELECTRICAL EQUIPMENT OR ACCESSORY RE: E SERIES DWGS

THIS CONFORMED DOCUMENT IS RELEASED FOR THE CONVENIENCE OF THE CONTRACTOR UNDER THE AUTHORITY OF:

DAVID NEGRETE, R.A. — DATE 11-01-22
TX LIC NO. 11640

SEE DISCLAIMER FOR LIMITATIONS OF USE.

CONTRACT DOCUMENTS DATED JUNE 10, 2022, AS PART OF THE BIDDING DOCUMENTS (DRAWINGS AND SPECIFICATIONS) AND SUBSEQUENTLY ISSUED ADDENDA HAVE BEEN MERGED INTO ONE CONFORMING SET OF DOCUMENTS FOR THE CONVENIENCE OF THE CONTRACTOR. IF INCONSISTENCIES OR AMBIGUITIES BETWEEN "CONFORMED" DOCUMENTS AND CONTRACT DOCUMENTS ARE FOUND, THE CONTRACT DOCUMENTS SHALL GOVERN.

REV	DATE	BY	DESCRIPTION
△1	09-06-22	JTG	ADDENDUM NO. 5

CONFORMED DOCUMENTS

DESIGNED JTG
DRAWN JTG
CHECKED JTG
DATE NOVEMBER 2022

** ORIGINAL SEALED BY DAVID NEGRETE 06-10-22 TX RA 11640 **

NEGRETE & KOLAR ARCHITECTS,LLP
11720 NORTH IH 35, AUSTIN TEXAS 78753 P: 512.474.6526
carollo TBPELS No. F-882
CITY OF AUSTIN FOUNDED 1839 CITY OF AUSTIN

CITY OF AUSTIN
WILD HORSE RANCH WWTP EXPANSION
ARCHITECTURAL
ADMINISTRATION BUILDING
LEVEL ONE FLOOR PLAN

VERIFY SCALES
BAR IS ONE INCH ON ORIGINAL DRAWING 0 — 1"
IF NOT ONE INCH ON THIS SHEET, ADJUST SCALES ACCORDINGLY

JOB NO. 10976A.00
DRAWING NO. 90A02
SHEET NO. 301 OF 464

LAST SAVED BY: Jason.George

PROJECT NO. 10976A10 FILE NAME: 10976A1090A02.dwg

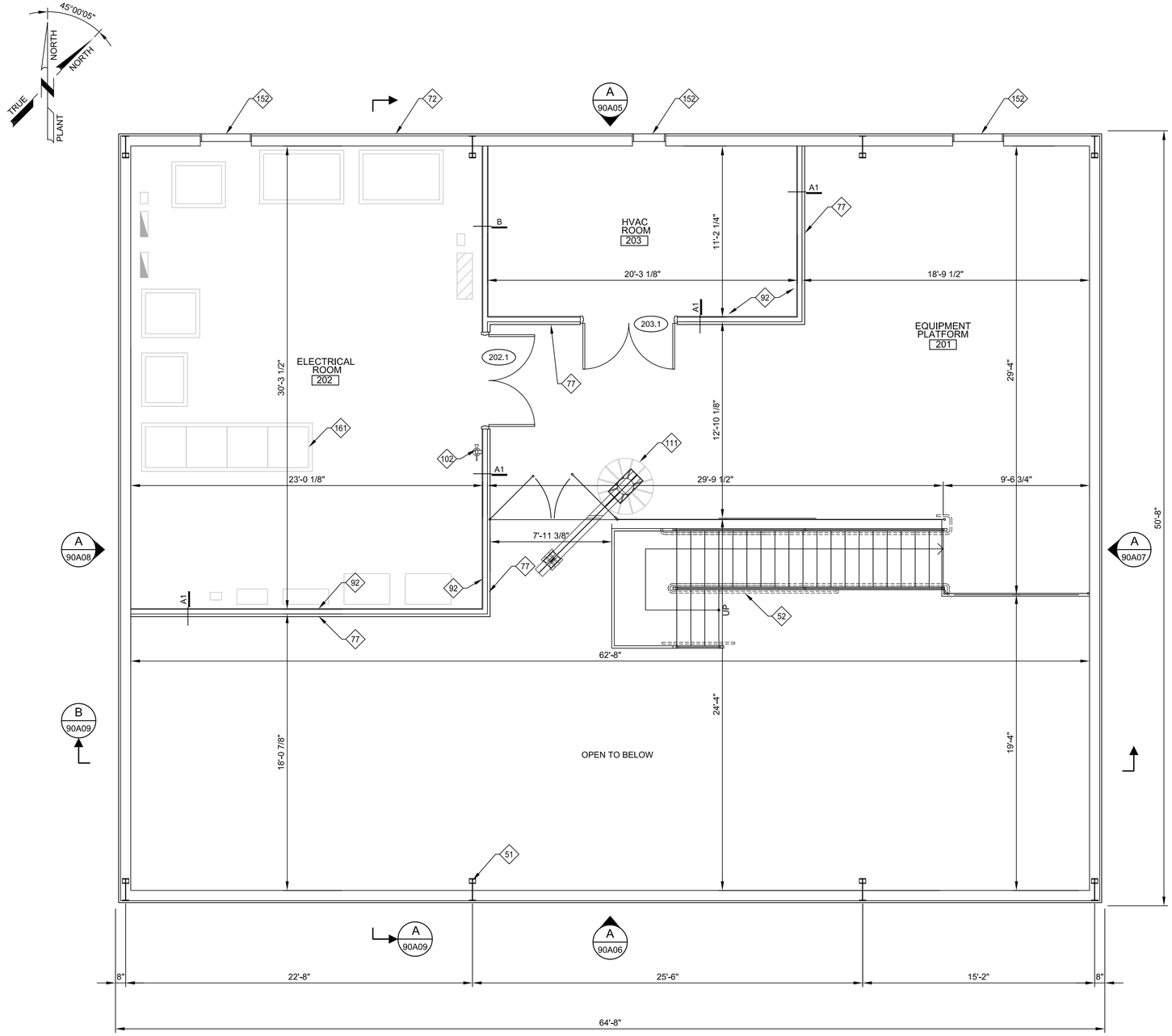

A PLAN - ADMINISTRATION BUILDING - EQUIPMENT PLATFORM

SCALE: 1/4"=1'-0"
FILE: 10976A1090A101.dwg

LEGEND

XXX DOOR TYPE; RE: SHEET 90A16

X PARTITION TYPE; RE: SHEET 90A17

GENERAL NOTES

1. REFER TO ARCHITECTURAL SCHEDULES AND TYP DETAILS FOR ADDL INFO
2. REFER TO TYP ARCHITECTURAL DETAILS FOR ADDITIONAL INFORMATION RE: 00TA01-00TA08
3. KEY NOTE PREFIX CORRESPONDS TO SPEC DIVISION FOR EACH FACILITY: NOT ALL KEY NOTES ARE PERTINENT TO EVERY SHEET

KEY NOTES

21 ADJACENT PAVEMENT OR GRADE RE: CIVIL
22 TRASH AND RECYCLING RECEPTICLES
31 CONCRETE STRUCTURE RE: S SERIES DWGS
32 CONCRETE CURB OR PAD OR WALL RE: S SERIES DWGS
41 CMU: 12-IN NOM BED WIDTH
42 CMU: 4-IN NOM BED WIDTH
43 CMU: 8-IN NOM BED WIDTH
44 MASONRY CONTROL JOINT
51 STRUCT STEEL FRAME AND DECK RE: S SERIES DWGS
52 STRUCT STEEL STAIR AND LANDING RE: S SERIES DWGS
61 WOOD BLOCKING
71 ROOF ASSEMBLY OR ACCESSORY
72 EXTERIOR WALL PANEL OR ACCESSORY
73 GUTTER AND DOWNSPOUT SYSTEM
74 FOAMED-IN-PLACE MASONRY INSULATION
75 BATT INSULATION FULL WIDTH AND DEPTH OF STUD CAVITY
76 POLYISO BOARD INSULATION
77 INTERIOR WALL METAL PANEL
78 PRE-ENGINEERED METAL BUILDING INSULATION SYSTEM
91 WATER REPELLANT TYP ON CMU AND SLOPED CONC SILL AS INDICATED
92 GYPSUM WALL BOARD
93 CERAMIC WALL TILE
94 SS 48" CORNER GUARDS MOUNTED 12" FROM FLOOR
95 ACOUSTICAL PANEL CEILING
96 FLUID-APPLIED FLOOR COVERING AT SCORED TRANSITION FROM PC.
97 RESILIENT WALL BASE
101 BUILDING SIGNAGE
102 FIRE EXTINGUISHER - SURFACE MOUNTED RE: 1/00TA08
103 FIRE EXTINGUISHER & CABINET
105 METAL LOCKER
106 DEMOUNTABLE PARTITION & SLIDING DOOR
108 TOILET, BATH OR LAUNDRY ACCESSORY
140 EQUIPMENT DAVIT: FLOOR MOUNTED
151 PLUMBING FIXTURE OR ACCESSORY. RE: P SERIES
152 HVAC EQUIPMENT OR ACCESSORY. RE: H SERIES
161 ELECTRICAL EQUIPMENT OR ACCESSORY RE: E SERIES DWGS

THIS CONFORMED DOCUMENT IS RELEASED FOR THE CONVENIENCE OF THE CONTRACTOR UNDER THE AUTHORITY OF:

DAVID NEGRETE, R.A. — DATE 11-01-22
TX LIC NO. 11640

SEE DISCLAIMER FOR LIMITATIONS OF USE.

CONTRACT DOCUMENTS DATED JUNE 10, 2022, AS PART OF THE BIDDING DOCUMENTS (DRAWINGS AND SPECIFICATIONS) AND SUBSEQUENTLY ISSUED ADDENDA HAVE BEEN MERGED INTO ONE CONFORMING SET OF DOCUMENTS FOR THE CONVENIENCE OF THE CONTRACTOR. IF INCONSISTENCIES OR AMBIGUITIES BETWEEN "CONFORMED" DOCUMENTS AND CONTRACT DOCUMENTS ARE FOUND, THE CONTRACT DOCUMENTS SHALL GOVERN.

REV	DATE	BY	DESCRIPTION
			CONFORMED DOCUMENTS

DESIGNED JTG
DRAWN JTG
CHECKED JTG
DATE NOVEMBER 2022

** ORIGINAL SEALED BY DAVID NEGRETE 06-10-22 TX RA 11640 **

NEGRETE & KOLAR ARCHITECTS,LLP
11720 NORTH IH 35, AUSTIN TEXAS 78753 P: 512.474.6526
carollo TBPELS No. F-882
CITY OF AUSTIN FOUNDED 1839 CITY OF AUSTIN

CITY OF AUSTIN
WILD HORSE RANCH WWTP EXPANSION
ARCHITECTURAL
ADMINISTRATION BUILDING
EQUIPMENT PLATFORM FLOOR PLAN

VERIFY SCALES
BAR IS ONE INCH ON ORIGINAL DRAWING
0 1"
IF NOT ONE INCH ON THIS SHEET, ADJUST SCALES ACCORDINGLY

JOB NO. 10976A.00
DRAWING NO. 90A03
SHEET NO. 302 OF 464

LAST SAVED BY: Jason.George

PROJECT NO. 10976A10 FILE NAME: 10976A1090A03.dwg

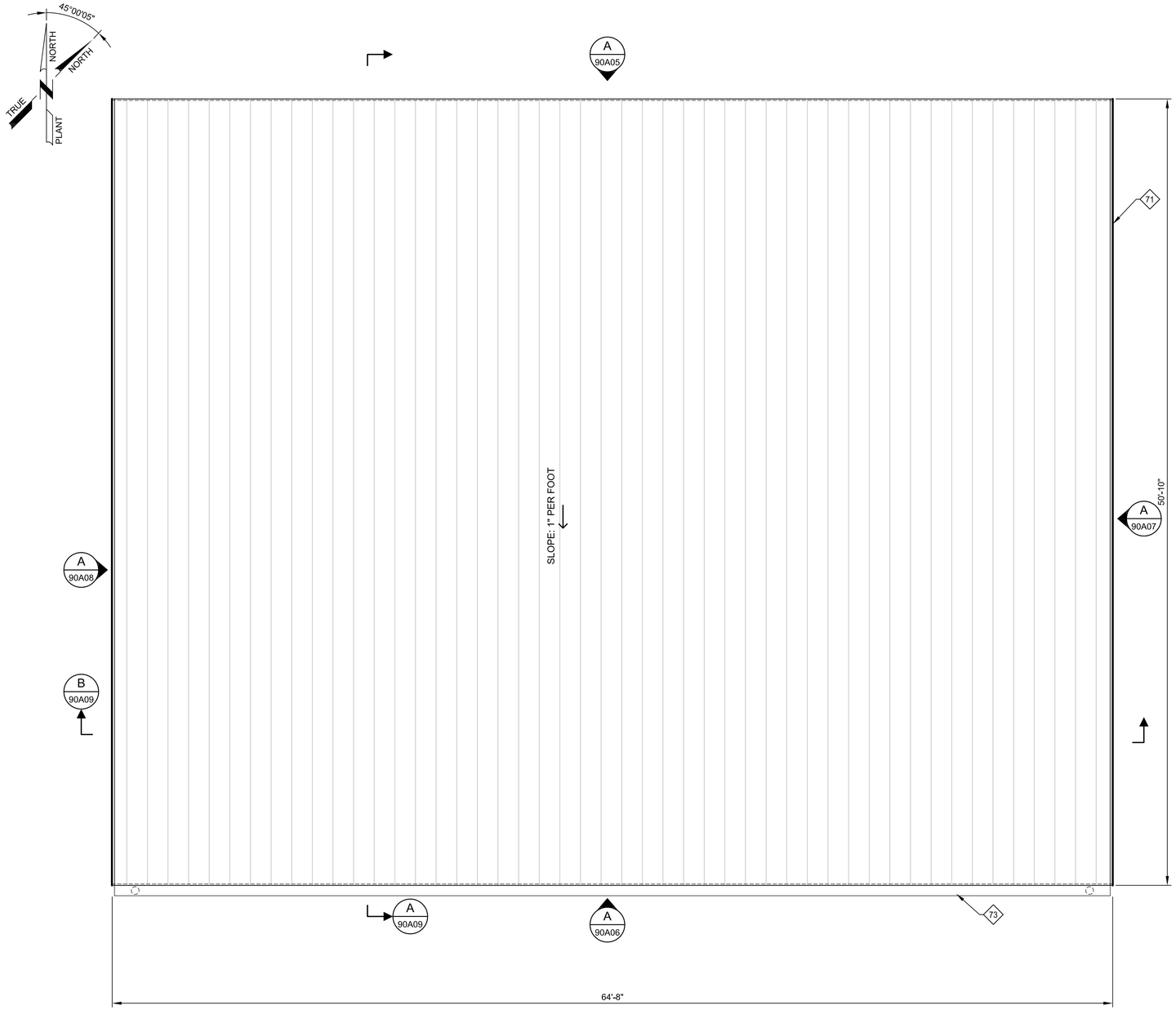

GENERAL NOTES

1. REFER TO ARCHITECTURAL SCHEDULES AND TYP DETAILS FOR ADDL INFO
2. REFER TO TYP ARCHITECTURAL DETAILS FOR ADDITIONAL INFORMATION RE: 00TA01-00TA08
3. KEY NOTE PREFIX CORRESPONDS TO SPEC DIVISION FOR EACH FACILITY: NOT ALL KEY NOTES ARE PERTINENT TO EVERY SHEET

KEY NOTES

- 21 ADJACENT PAVEMENT OR GRADE RE: CIVIL
- 22 TRASH AND RECYCLING RECEPTICLES
- 31 CONCRETE STRUCTURE RE: S SERIES DWGS
- 32 CONCRETE CURB OR PAD OR WALL RE: S SERIES DWGS
- 41 CMU: 12-IN NOM BED WIDTH
- 42 CMU: 4-IN NOM BED WIDTH
- 43 CMU: 8-IN NOM BED WIDTH
- 44 MASONRY CONTROL JOINT
- 51 STRUCT STEEL FRAME AND DECK RE: S SERIES DWGS
- 52 STRUCT STEEL STAIR AND LANDING RE: S SERIES DWGS
- 61 WOOD BLOCKING
- 71 ROOF ASSEMBLY OR ACCESSORY
- 72 EXTERIOR WALL PANEL OR ACCESSORY
- 73 GUTTER AND DOWNSPOUT SYSTEM
- 74 FOAMED-IN-PLACE MASONRY INSULATION
- 75 BATT INSULATION FULL WIDTH AND DEPTH OF STUD CAVITY
- 76 POLYISO BOARD INSULATION
- 77 INTERIOR WALL METAL PANEL
- 78 PRE-ENGINEERED METAL BUILDING INSULATION SYSTEM
- 91 WATER REPELLANT TYP ON CMU AND SLOPED CONC SILL AS INDICATED
- 92 GYPSUM WALL BOARD
- 93 CERAMIC WALL TILE
- 94 SS 48" CORNER GUARDS MOUNTED 12" FROM FLOOR
- 95 ACOUSTICAL PANEL CEILING
- 96 FLUID-APPLIED FLOOR COVERING AT SCORED TRANSITION FROM PC.
- 97 RESILIENT WALL BASE
- 101 BUILDING SIGNAGE
- 102 FIRE EXTINGUISHER - SURFACE MOUNTED RE: 1/00TA08
- 103 FIRE EXTINGUISHER & CABINET
- 105 METAL LOCKER
- 106 DEMOUNTABLE PARTITION & SLIDING DOOR
- 108 TOILET, BATH OR LAUNDRY ACCESSORY
- 140 EQUIPMENT DAVIT: FLOOR MOUNTED
- 151 PLUMBING FIXTURE OR ACCESSORY. RE: P SERIES
- 152 HVAC EQUIPMENT OR ACCESSORY. RE: H SERIES
- 161 ELECTRICAL EQUIPMENT OR ACCESSORY RE: E SERIES DWGS

THIS CONFORMED DOCUMENT IS RELEASED FOR THE CONVENIENCE OF THE CONTRACTOR UNDER THE AUTHORITY OF:

DAVID NEGRETE, R.A. — DATE 11-01-22
TX LIC NO. 11640

SEE DISCLAIMER FOR LIMITATIONS OF USE.

CONTRACT DOCUMENTS DATED JUNE 10, 2022, AS PART OF THE BIDDING DOCUMENTS (DRAWINGS AND SPECIFICATIONS) AND SUBSEQUENTLY ISSUED ADDENDA HAVE BEEN MERGED INTO ONE CONFORMING SET OF DOCUMENTS FOR THE CONVENIENCE OF THE CONTRACTOR. IF INCONSISTENCIES OR AMBIGUITIES BETWEEN "CONFORMED" DOCUMENTS AND CONTRACT DOCUMENTS ARE FOUND, THE CONTRACT DOCUMENTS SHALL GOVERN.

A PLAN - ADMINISTRATION BUILDING - ROOF PLAN

SCALE: 1/4"=1'-0"
FILE: 10976A1090A103.dwg

REV	DATE	BY	DESCRIPTION
			CONFORMED DOCUMENTS

DESIGNED JTG
DRAWN JTG
CHECKED JTG
DATE NOVEMBER 2022

** ORIGINAL SEALED BY DAVID NEGRETE 06-10-22 TX RA 11640 **

NEGRETE & KOLAR ARCHITECTS,LLP
11720 NORTH IH 35, AUSTIN TEXAS 78753 P: 512.474.6526

carollo
TBPELS No. F-882

CITY OF AUSTIN
CITY OF AUSTIN FOUNDED 1839

CITY OF AUSTIN
WILD HORSE RANCH WWTP EXPANSION
ARCHITECTURAL
ADMINISTRATION BUILDING
ROOF PLAN

VERIFY SCALES
BAR IS ONE INCH ON ORIGINAL DRAWING
0 1"
IF NOT ONE INCH ON THIS SHEET, ADJUST SCALES ACCORDINGLY

JOB NO. 10976A.00
DRAWING NO. 90A04
SHEET NO. 303 OF 464

LAST SAVED BY: Jason.George

PROJECT NO. 10976A10 FILE NAME: 10976A1090A04.dwg

THIS CONFORMED DOCUMENT IS RELEASED FOR THE CONVENIENCE OF THE CONTRACTOR UNDER THE AUTHORITY OF:

11-01-22

DAVID NEGRETE, R.A. DATE
TX LIC NO. 11640

SEE DISCLAIMER FOR LIMITATIONS OF USE.

CONTRACT DOCUMENTS DATED JUNE 10, 2022, AS PART OF THE BIDDING DOCUMENTS (DRAWINGS AND SPECIFICATIONS) AND SUBSEQUENTLY ISSUED ADDENDA HAVE BEEN MERGED INTO ONE CONFORMING SET OF DOCUMENTS FOR THE CONVENIENCE OF THE CONTRACTOR. IF INCONSISTENCIES OR AMBIGUITIES BETWEEN "CONFORMED" DOCUMENTS AND CONTRACT DOCUMENTS ARE FOUND, THE CONTRACT DOCUMENTS SHALL GOVERN.

GENERAL NOTES

1. REFER TO ARCHITECTURAL SCHEDULES AND TYP DETAILS FOR ADDL INFO
2. REFER TO TYP ARCHITECTURAL DETAILS FOR ADDITIONAL INFORMATION RE: 00TA01-00TA08
3. KEY NOTE PREFIX CORRESPONDS TO SPEC DIVISION FOR EACH FACILITY: NOT ALL KEY NOTES ARE PERTINENT TO EVERY SHEET

KEY NOTES

21 ADJACENT PAVEMENT OR GRADE RE: CIVIL
22 TRASH AND RECYCLING RECEPTICLES
31 CONCRETE STRUCTURE RE: S SERIES DWGS
32 CONCRETE CURB OR PAD OR WALL RE: S SERIES DWGS
41 CMU: 12-IN NOM BED WIDTH
42 CMU: 4-IN NOM BED WIDTH
43 CMU: 8-IN NOM BED WIDTH
44 MASONRY CONTROL JOINT
51 STRUCT STEEL FRAME AND DECK RE: S SERIES DWGS
52 STRUCT STEEL STAIR AND LANDING RE: S SERIES DWGS
61 WOOD BLOCKING
71 ROOF ASSEMBLY OR ACCESSORY
72 EXTERIOR WALL PANEL OR ACCESSORY
73 GUTTER AND DOWNSPOUT SYSTEM
74 FOAMED-IN-PLACE MASONRY INSULATION
75 BATT INSULATION FULL WIDTH AND DEPTH OF STUD CAVITY
76 POLYISO BOARD INSULATION
77 INTERIOR WALL METAL PANEL
78 PRE-ENGINEERED METAL BUILDING INSULATION SYSTEM
91 WATER REPELLANT TYP ON CMU AND SLOPED CONC SILL AS INDICATED
92 GYPSUM WALL BOARD
93 CERAMIC WALL TILE
94 SS 48" CORNER GUARDS MOUNTED 12" FROM FLOOR
95 ACOUSTICAL PANEL CEILING
96 FLUID-APPLIED FLOOR COVERING AT SCORED TRANSITION FROM PC.
97 RESILIENT WALL BASE
101 BUILDING SIGNAGE
102 FIRE EXTINGUISHER - SURFACE MOUNTED RE: 1/00TA08
103 FIRE EXTINGUISHER & CABINET
105 METAL LOCKER
106 DEMOUNTABLE PARTITION & SLIDING DOOR
108 TOILET, BATH OR LAUNDRY ACCESSORY
140 EQUIPMENT DAVIT: FLOOR MOUNTED
151 PLUMBING FIXTURE OR ACCESSORY. RE: P SERIES
152 HVAC EQUIPMENT OR ACCESSORY. RE: H SERIES
161 ELECTRICAL EQUIPMENT OR ACCESSORY RE: E SERIES DWGS

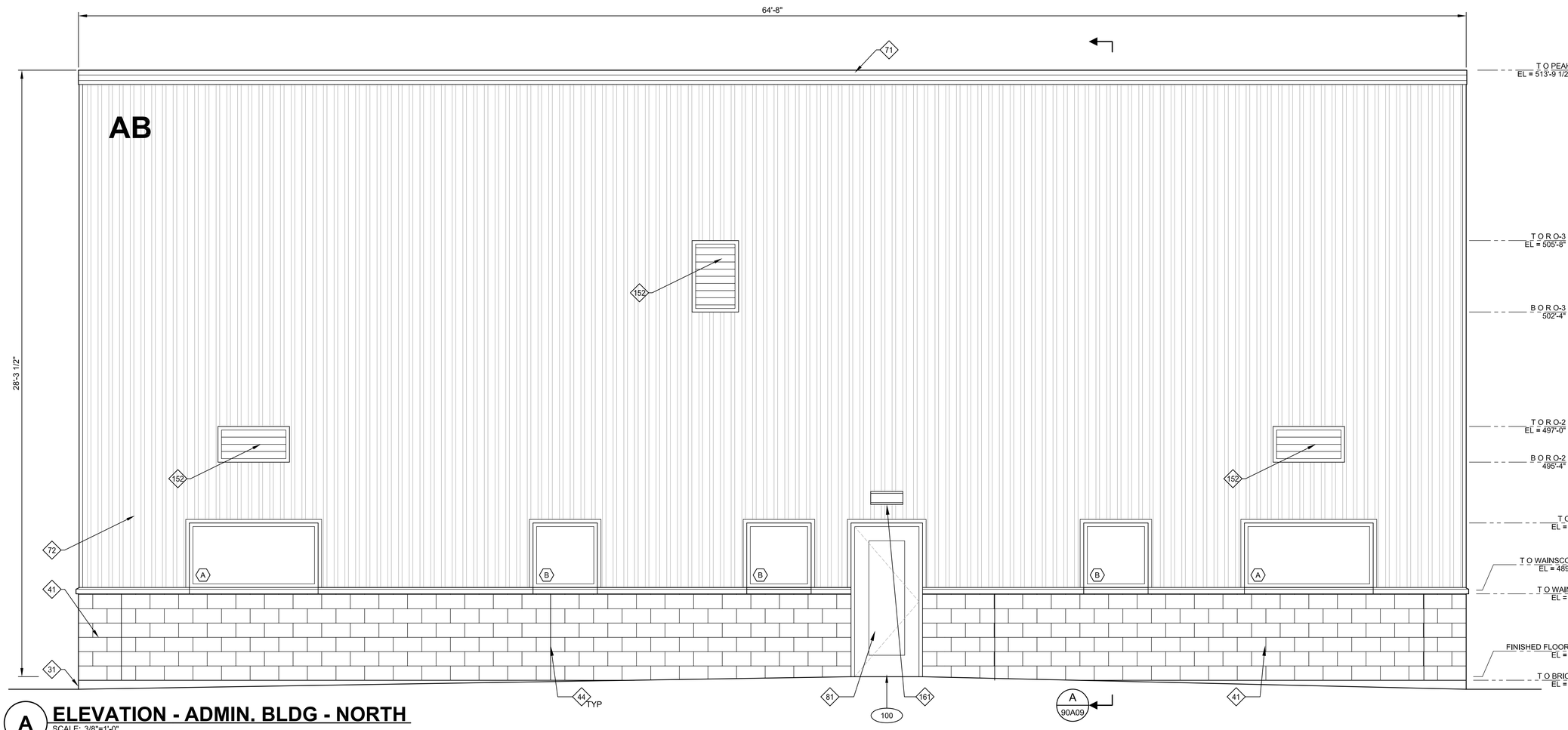

A ELEVATION - ADMIN. BLDG - NORTH

SCALE: 3/8"=1'-0"
FILE: 10976A1090A501.dwg

REV	DATE	BY	DESCRIPTION
			CONFORMED DOCUMENTS

DESIGNED JTG
DRAWN JTG
CHECKED JTG
DATE NOVEMBER 2022

** ORIGINAL SEALED BY DAVID NEGRETE 06-10-22 TX RA 11640 **

NEGRETE & KOLAR ARCHITECTS,LLP
11720 NORTH IH 35, AUSTIN TEXAS 78753 P: 512.474.6526

carollo TBPELS No. F-882

CITY OF AUSTIN

CITY OF AUSTIN
WILD HORSE RANCH WWTP EXPANSION
ARCHITECTURAL
ADMINISTRATION BUILDING
EXTERIOR ELEVATIONS - NORTH

VERIFY SCALES
BAR IS ONE INCH ON ORIGINAL DRAWING
0 1"
IF NOT ONE INCH ON THIS SHEET, ADJUST SCALES ACCORDINGLY

JOB NO. 10976A.00
DRAWING NO. 90A05
SHEET NO. 304 OF 464

LAST SAVED BY: Jason.George

PROJECT NO. 10976A10 FILE NAME: 10976A1090A05.dwg

THIS CONFORMED DOCUMENT IS RELEASED FOR THE CONVENIENCE OF THE CONTRACTOR UNDER THE AUTHORITY OF:

11-01-22

DAVID NEGRETE, R.A. DATE
TX LIC NO. 11640

SEE DISCLAIMER FOR LIMITATIONS OF USE.

CONTRACT DOCUMENTS DATED JUNE 10, 2022, AS PART OF THE BIDDING DOCUMENTS (DRAWINGS AND SPECIFICATIONS) AND SUBSEQUENTLY ISSUED ADDENDA HAVE BEEN MERGED INTO ONE CONFORMING SET OF DOCUMENTS FOR THE CONVENIENCE OF THE CONTRACTOR. IF INCONSISTENCIES OR AMBIGUITIES BETWEEN "CONFORMED" DOCUMENTS AND CONTRACT DOCUMENTS ARE FOUND, THE CONTRACT DOCUMENTS SHALL GOVERN.

GENERAL NOTES

1. REFER TO ARCHITECTURAL SCHEDULES AND TYP DETAILS FOR ADDL INFO
2. REFER TO TYP ARCHITECTURAL DETAILS FOR ADDITIONAL INFORMATION RE: 00TA01-00TA08
3. KEY NOTE PREFIX CORRESPONDS TO SPEC DIVISION FOR EACH FACILITY: NOT ALL KEY NOTES ARE PERTINENT TO EVERY SHEET

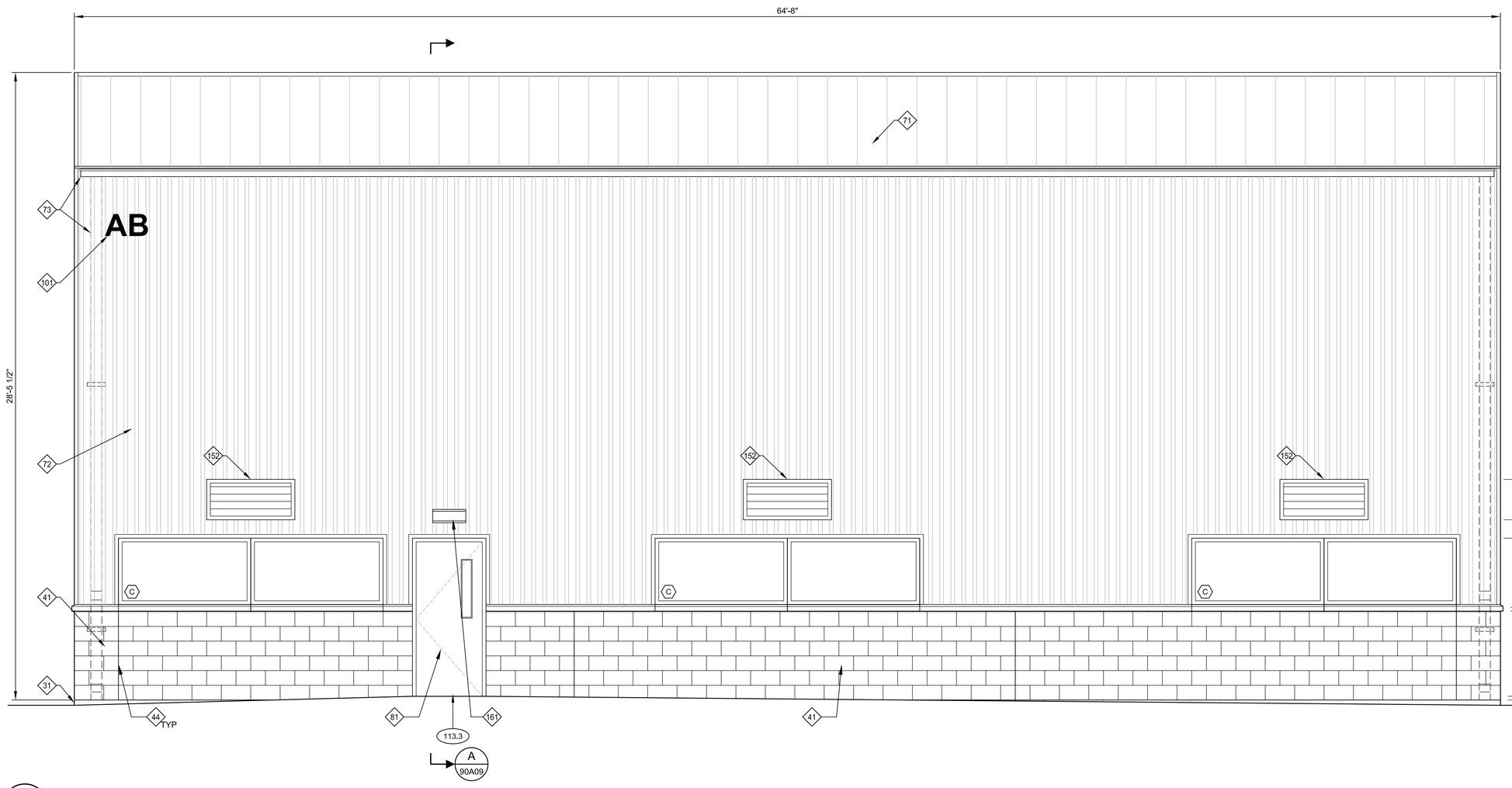

KEY NOTES

21 ADJACENT PAVEMENT OR GRADE RE: CIVIL
22 TRASH AND RECYCLING RECEPTICLES
31 CONCRETE STRUCTURE RE: S SERIES DWGS
32 CONCRETE CURB OR PAD OR WALL RE: S SERIES DWGS
41 CMU: 12-IN NOM BED WIDTH
42 CMU: 4-IN NOM BED WIDTH
43 CMU: 8-IN NOM BED WIDTH
44 MASONRY CONTROL JOINT
51 STRUCT STEEL FRAME AND DECK RE: S SERIES DWGS
52 STRUCT STEEL STAIR AND LANDING RE: S SERIES DWGS
61 WOOD BLOCKING
71 ROOF ASSEMBLY OR ACCESSORY
72 EXTERIOR WALL PANEL OR ACCESSORY
73 GUTTER AND DOWNSPOUT SYSTEM
74 FOAMED-IN-PLACE MASONRY INSULATION
75 BATT INSULATION FULL WIDTH AND DEPTH OF STUD CAVITY
76 POLYISO BOARD INSULATION
77 INTERIOR WALL METAL PANEL
78 PRE-ENGINEERED METAL BUILDING INSULATION SYSTEM
91 WATER REPELLANT TYP ON CMU AND SLOPED CONC SILL AS INDICATED
92 GYPSUM WALL BOARD
93 CERAMIC WALL TILE
94 SS 48" CORNER GUARDS MOUNTED 12" FROM FLOOR
95 ACOUSTICAL PANEL CEILING
96 FLUID-APPLIED FLOOR COVERING AT SCORED TRANSITION FROM PC.
97 RESILIENT WALL BASE
101 BUILDING SIGNAGE
102 FIRE EXTINGUISHER - SURFACE MOUNTED RE: 1/00TA08
103 FIRE EXTINGUISHER & CABINET
105 METAL LOCKER
106 DEMOUNTABLE PARTITION & SLIDING DOOR
108 TOILET, BATH OR LAUNDRY ACCESSORY
140 EQUIPMENT DAVIT: FLOOR MOUNTED
151 PLUMBING FIXTURE OR ACCESSORY. RE: P SERIES
152 HVAC EQUIPMENT OR ACCESSORY. RE: H SERIES
161 ELECTRICAL EQUIPMENT OR ACCESSORY RE: E SERIES DWGS

A ELEVATION - ADMIN. BLDG - SOUTH

SCALE: 3/8"=1'-0"
FILE: 10976A1090A502.dwg

REV	DATE	BY	DESCRIPTION
			CONFORMED DOCUMENTS

DESIGNED JTG
DRAWN JTG
CHECKED JTG
DATE NOVEMBER 2022

** ORIGINAL SEALED BY DAVID NEGRETE 06-10-22 TX RA 11640 **

NEGRETE & KOLAR ARCHITECTS,LLP
11720 NORTH IH 35, AUSTIN TEXAS 78753 P: 512.474.6526

carollo TBPELS No. F-882

CITY OF AUSTIN FOUNDED 1839 **CITY OF AUSTIN**

CITY OF AUSTIN
WILD HORSE RANCH WWTP EXPANSION
ARCHITECTURAL
ADMINISTRATION BUILDING
EXTERIOR ELEVATIONS - SOUTH

VERIFY SCALES
BAR IS ONE INCH ON ORIGINAL DRAWING
0 1"
IF NOT ONE INCH ON THIS SHEET, ADJUST SCALES ACCORDINGLY

JOB NO. 10976A.00
DRAWING NO. 90A06
SHEET NO. 305 OF 464

LAST SAVED BY: Jason.George

PROJECT NO. 10976A10 FILE NAME: 10976A1090A06.dwg

THIS CONFORMED DOCUMENT IS RELEASED FOR THE CONVENIENCE OF THE CONTRACTOR UNDER THE AUTHORITY OF:

11-01-22

DAVID NEGRETE, R.A. DATE
TX LIC NO. 11640

SEE DISCLAIMER FOR LIMITATIONS OF USE.

CONTRACT DOCUMENTS DATED JUNE 10, 2022, AS PART OF THE BIDDING DOCUMENTS (DRAWINGS AND SPECIFICATIONS) AND SUBSEQUENTLY ISSUED ADDENDA HAVE BEEN MERGED INTO ONE CONFORMING SET OF DOCUMENTS FOR THE CONVENIENCE OF THE CONTRACTOR. IF INCONSISTENCIES OR AMBIGUITIES BETWEEN "CONFORMED" DOCUMENTS AND CONTRACT DOCUMENTS ARE FOUND, THE CONTRACT DOCUMENTS SHALL GOVERN.

GENERAL NOTES

1. REFER TO ARCHITECTURAL SCHEDULES AND TYP DETAILS FOR ADDL INFO
2. REFER TO TYP ARCHITECTURAL DETAILS FOR ADDITIONAL INFORMATION RE: 00TA01-00TA08
3. KEY NOTE PREFIX CORRESPONDS TO SPEC DIVISION FOR EACH FACILITY: NOT ALL KEY NOTES ARE PERTINENT TO EVERY SHEET

KEY NOTES

21 ADJACENT PAVEMENT OR GRADE RE: CIVIL
22 TRASH AND RECYCLING RECEPTICLES
31 CONCRETE STRUCTURE RE: S SERIES DWGS
32 CONCRETE CURB OR PAD OR WALL RE: S SERIES DWGS
41 CMU: 12-IN NOM BED WIDTH
42 CMU: 4-IN NOM BED WIDTH
43 CMU: 8-IN NOM BED WIDTH
44 MASONRY CONTROL JOINT
51 STRUCT STEEL FRAME AND DECK RE: S SERIES DWGS
52 STRUCT STEEL STAIR AND LANDING RE: S SERIES DWGS
61 WOOD BLOCKING
71 ROOF ASSEMBLY OR ACCESSORY
72 EXTERIOR WALL PANEL OR ACCESSORY
73 GUTTER AND DOWNSPOUT SYSTEM
74 FOAMED-IN-PLACE MASONRY INSULATION
75 BATT INSULATION FULL WIDTH AND DEPTH OF STUD CAVITY
76 POLYISO BOARD INSULATION
77 INTERIOR WALL METAL PANEL
78 PRE-ENGINEERED METAL BUILDING INSULATION SYSTEM
91 WATER REPELLANT TYP ON CMU AND SLOPED CONC SILL AS INDICATED
92 GYPSUM WALL BOARD
93 CERAMIC WALL TILE
94 SS 48" CORNER GUARDS MOUNTED 12" FROM FLOOR
95 ACOUSTICAL PANEL CEILING
96 FLUID-APPLIED FLOOR COVERING AT SCORED TRANSITION FROM PC.
97 RESILIENT WALL BASE
101 BUILDING SIGNAGE
102 FIRE EXTINGUISHER - SURFACE MOUNTED RE: 1/00TA08
103 FIRE EXTINGUISHER & CABINET
105 METAL LOCKER
106 DEMOUNTABLE PARTITION & SLIDING DOOR
108 TOILET, BATH OR LAUNDRY ACCESSORY
140 EQUIPMENT DAVIT: FLOOR MOUNTED
151 PLUMBING FIXTURE OR ACCESSORY. RE: P SERIES
152 HVAC EQUIPMENT OR ACCESSORY. RE: H SERIES
161 ELECTRICAL EQUIPMENT OR ACCESSORY RE: E SERIES DWGS

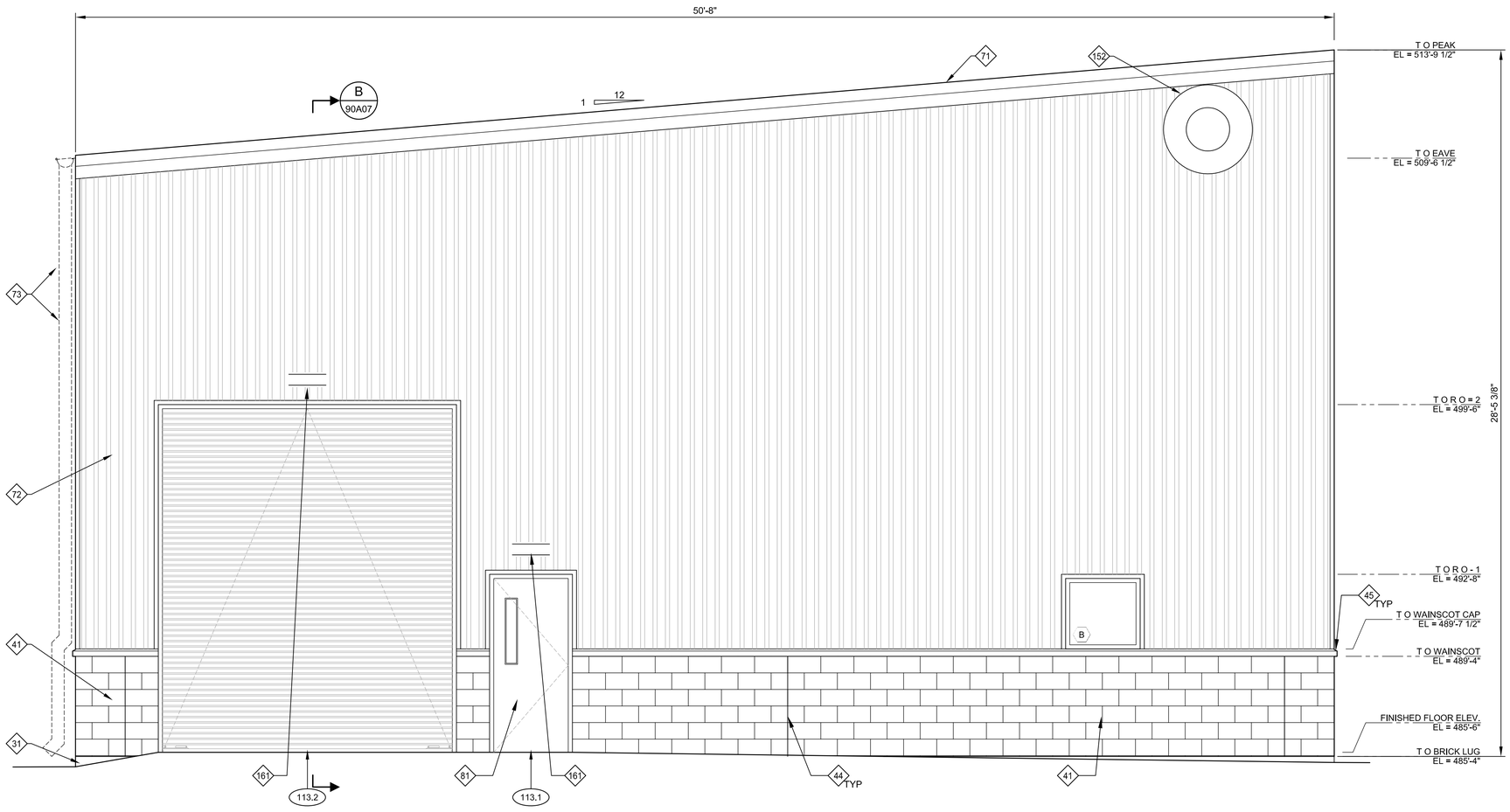

A ELEVATION - ADMIN. BLDG - EAST

SCALE: 3/8"=1'-0"
FILE: 10976A1090A503.dwg

LAST SAVED BY: Jason.George

REV	DATE	BY	DESCRIPTION
			CONFORMED DOCUMENTS

DESIGNED JTG
DRAWN JTG
CHECKED JTG
DATE NOVEMBER 2022

** ORIGINAL SEALED BY DAVID NEGRETE 06-10-22 TX RA 11640 **

NEGRETE & KOLAR ARCHITECTS,LLP
11720 NORTH IH 35, AUSTIN TEXAS 78753 P: 512.474.6526

carollo TBPELS No. F-882

CITY OF AUSTIN

CITY OF AUSTIN
WILD HORSE RANCH WWTP EXPANSION
ARCHITECTURAL
ADMINISTRATION BUILDING
EXTERIOR ELEVATIONS - EAST

VERIFY SCALES
BAR IS ONE INCH ON ORIGINAL DRAWING
0 1"
IF NOT ONE INCH ON THIS SHEET, ADJUST SCALES ACCORDINGLY

JOB NO. 10976A.00
DRAWING NO. 90A07
SHEET NO. 306 OF 464

PROJECT NO. 10976A10 FILE NAME: 10976A1090A07.dwg

THIS CONFORMED DOCUMENT IS RELEASED FOR THE CONVENIENCE OF THE CONTRACTOR UNDER THE AUTHORITY OF:

DNT

11-01-22

DAVID NEGRETE, R.A. DATE
TX LIC NO. 11640

SEE DISCLAIMER FOR LIMITATIONS OF USE.

CONTRACT DOCUMENTS DATED JUNE 10, 2022, AS PART OF THE BIDDING DOCUMENTS (DRAWINGS AND SPECIFICATIONS) AND SUBSEQUENTLY ISSUED ADDENDA HAVE BEEN MERGED INTO ONE CONFORMING SET OF DOCUMENTS FOR THE CONVENIENCE OF THE CONTRACTOR. IF INCONSISTENCIES OR AMBIGUITIES BETWEEN "CONFORMED" DOCUMENTS AND CONTRACT DOCUMENTS ARE FOUND, THE CONTRACT DOCUMENTS SHALL GOVERN.

GENERAL NOTES

1. REFER TO ARCHITECTURAL SCHEDULES AND TYP DETAILS FOR ADDL INFO
2. REFER TO TYP ARCHITECTURAL DETAILS FOR ADDITIONAL INFORMATION RE: 00TA01-00TA08
3. KEY NOTE PREFIX CORRESPONDS TO SPEC DIVISION FOR EACH FACILITY: NOT ALL KEY NOTES ARE PERTINENT TO EVERY SHEET

KEY NOTES

- 21 ADJACENT PAVEMENT OR GRADE RE: CIVIL
- 22 TRASH AND RECYCLING RECEPTICLES
- 31 CONCRETE STRUCTURE RE: S SERIES DWGS
- 32 CONCRETE CURB OR PAD OR WALL RE: S SERIES DWGS
- 41 CMU: 12-IN NOM BED WIDTH
- 42 CMU: 4-IN NOM BED WIDTH
- 43 CMU: 8-IN NOM BED WIDTH
- 44 MASONRY CONTROL JOINT
- 51 STRUCT STEEL FRAME AND DECK RE: S SERIES DWGS
- 52 STRUCT STEEL STAIR AND LANDING RE: S SERIES DWGS
- 61 WOOD BLOCKING
- 71 ROOF ASSEMBLY OR ACCESSORY
- 72 EXTERIOR WALL PANEL OR ACCESSORY
- 73 GUTTER AND DOWNSPOUT SYSTEM
- 74 FOAMED-IN-PLACE MASONRY INSULATION
- 75 BATT INSULATION FULL WIDTH AND DEPTH OF STUD CAVITY
- 76 POLYISO BOARD INSULATION
- 77 INTERIOR WALL METAL PANEL
- 78 PRE-ENGINEERED METAL BUILDING INSULATION SYSTEM
- 91 WATER REPELLANT TYP ON CMU AND SLOPED CONC SILL AS INDICATED
- 92 GYPSUM WALL BOARD
- 93 CERAMIC WALL TILE
- 94 SS 48" CORNER GUARDS MOUNTED 12" FROM FLOOR
- 95 ACOUSTICAL PANEL CEILING
- 96 FLUID-APPLIED FLOOR COVERING AT SCORED TRANSITION FROM PC.
- 97 RESILIENT WALL BASE
- 101 BUILDING SIGNAGE
- 102 FIRE EXTINGUISHER - SURFACE MOUNTED RE: 1/00TA08
- 103 FIRE EXTINGUISHER & CABINET
- 105 METAL LOCKER
- 106 DEMOUNTABLE PARTITION & SLIDING DOOR
- 108 TOILET, BATH OR LAUNDRY ACCESSORY
- 140 EQUIPMENT DAVIT: FLOOR MOUNTED
- 151 PLUMBING FIXTURE OR ACCESSORY. RE: P SERIES
- 152 HVAC EQUIPMENT OR ACCESSORY. RE: H SERIES
- 161 ELECTRICAL EQUIPMENT OR ACCESSORY RE: E SERIES DWGS

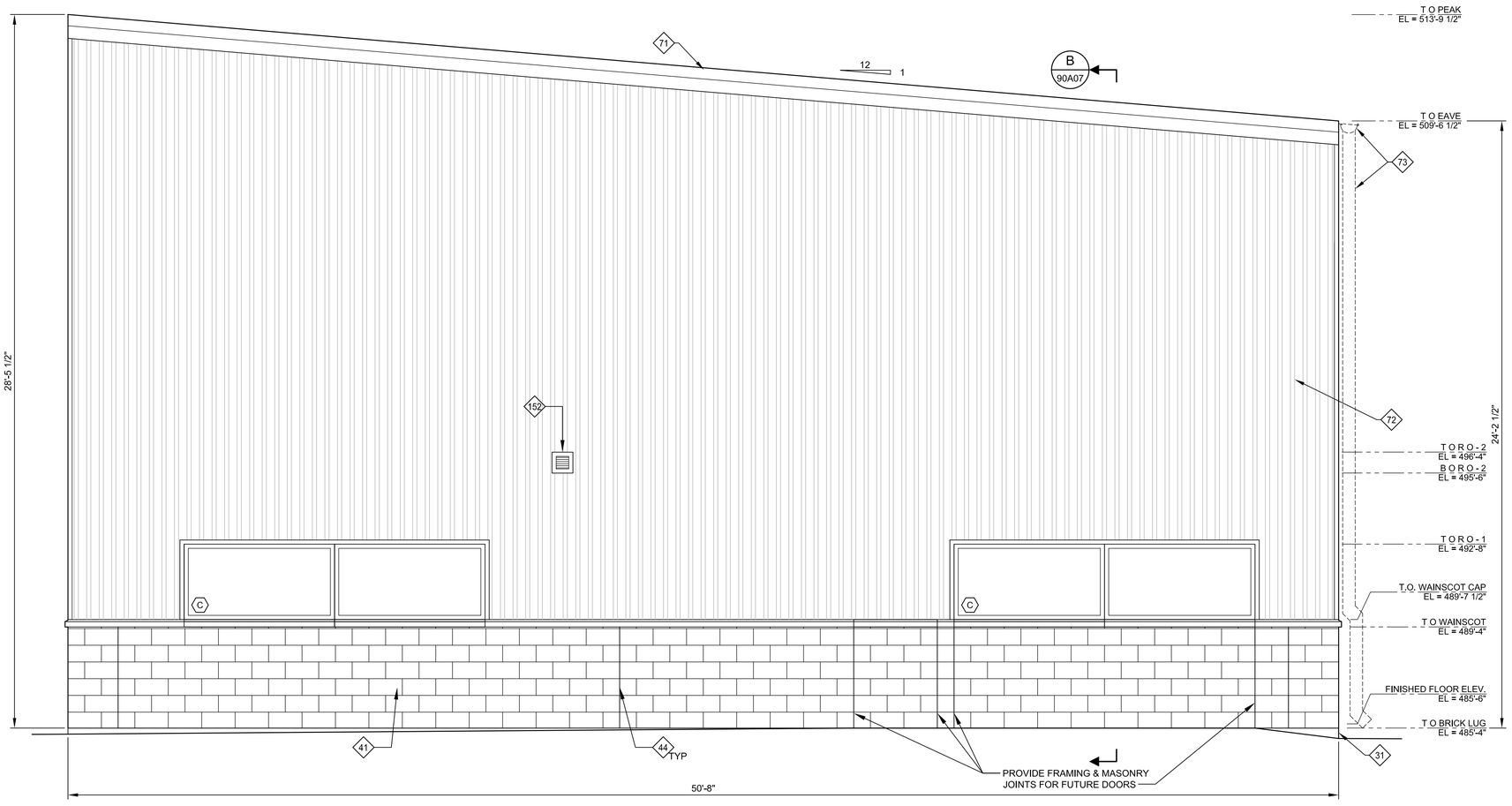

A ELEVATION - ADMIN. BLDG - WEST

SCALE: 3/8"=1'-0"
FILE: 10976A1090A503.dwg

REV	DATE	BY	DESCRIPTION
			CONFORMED DOCUMENTS

DESIGNED JTG
DRAWN JTG
CHECKED JTG
DATE NOVEMBER 2022

** ORIGINAL SEALED BY DAVID NEGRETE 06-10-22 TX RA 11640 **

NEGRETE & KOLAR ARCHITECTS,LLP
11720 NORTH IH 35, AUSTIN TEXAS 78753 P: 512.474.6526

carollo® TBPELS No. F-882

CITY OF AUSTIN

CITY OF AUSTIN
WILD HORSE RANCH WWTP EXPANSION
ARCHITECTURAL
ADMINISTRATION BUILDING
EXTERIOR ELEVATIONS - WEST

VERIFY SCALES
BAR IS ONE INCH ON ORIGINAL DRAWING
0 1"
IF NOT ONE INCH ON THIS SHEET, ADJUST SCALES ACCORDINGLY

JOB NO. 10976A.00
DRAWING NO. 90A08
SHEET NO. 307 OF 464

LAST SAVED BY: Jason.George

PROJECT NO. 10976A10 FILE NAME: 10976A1090A08.dwg

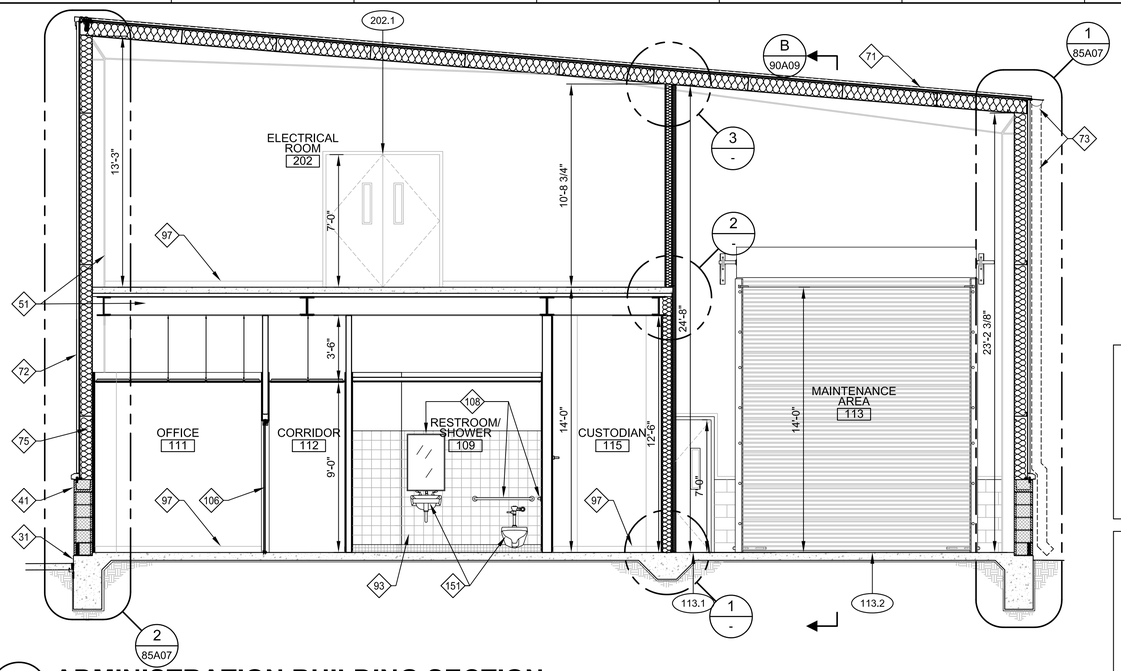

A ADMINISTRATION BUILDING SECTION

SCALE: 1/4"=1'-0"
FILE: 10976A1090A301.dwg

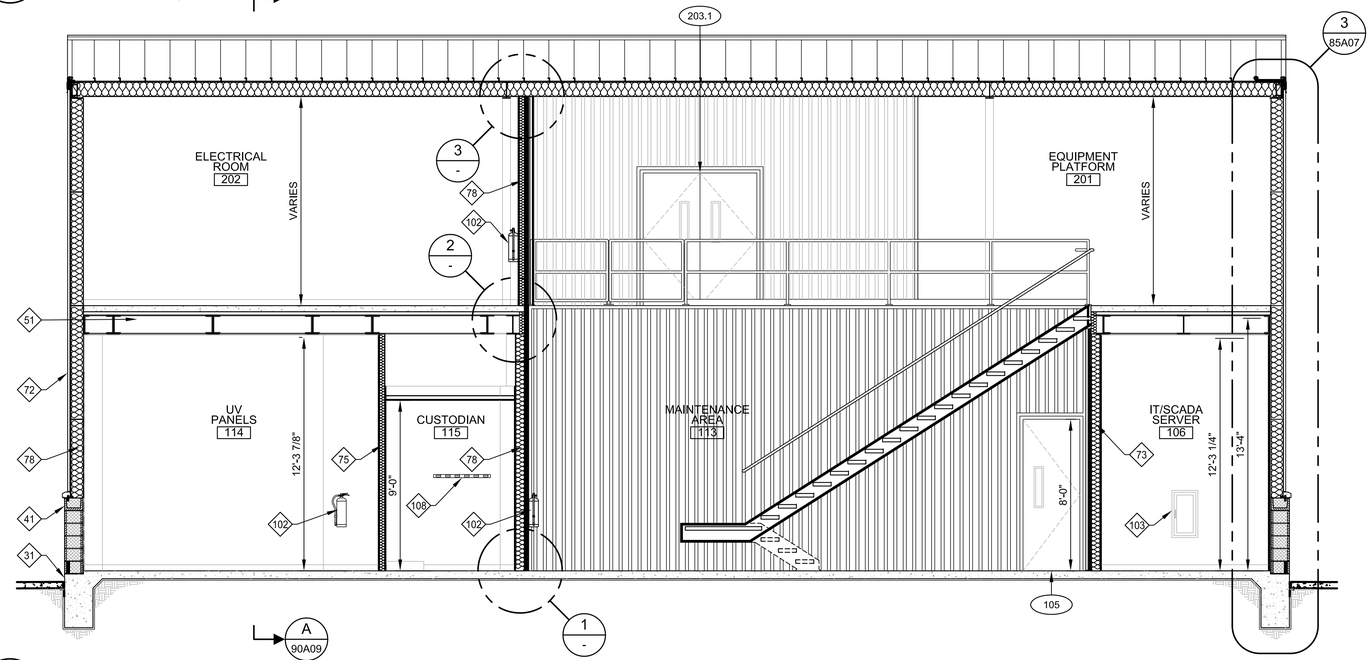

B ADMINISTRATION BUILDING SECTION

SCALE: 1/4"=1'-0"
FILE: 10976A1090A301.dwg

THIS CONFORMED DOCUMENT IS RELEASED FOR THE CONVENIENCE OF THE CONTRACTOR UNDER THE AUTHORITY OF:

DAVID NEGRETE, R.A. — 11-01-22 DATE
TX LIC NO. 11640

SEE DISCLAIMER FOR LIMITATIONS OF USE.

CONTRACT DOCUMENTS DATED JUNE 10, 2022, AS PART OF THE BIDDING DOCUMENTS (DRAWINGS AND SPECIFICATIONS) AND SUBSEQUENTLY ISSUED ADDENDA HAVE BEEN MERGED INTO ONE CONFORMING SET OF DOCUMENTS FOR THE CONVENIENCE OF THE CONTRACTOR. IF INCONSISTENCIES OR AMBIGUITIES BETWEEN "CONFORMED" DOCUMENTS AND CONTRACT DOCUMENTS ARE FOUND, THE CONTRACT DOCUMENTS SHALL GOVERN.

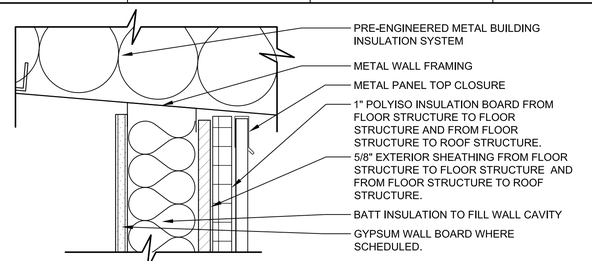

3 INTERIOR METAL FACED PARTITION HEAD

SCALE: 3"=1'-0"
FILE: 10296A1090A301.dwg

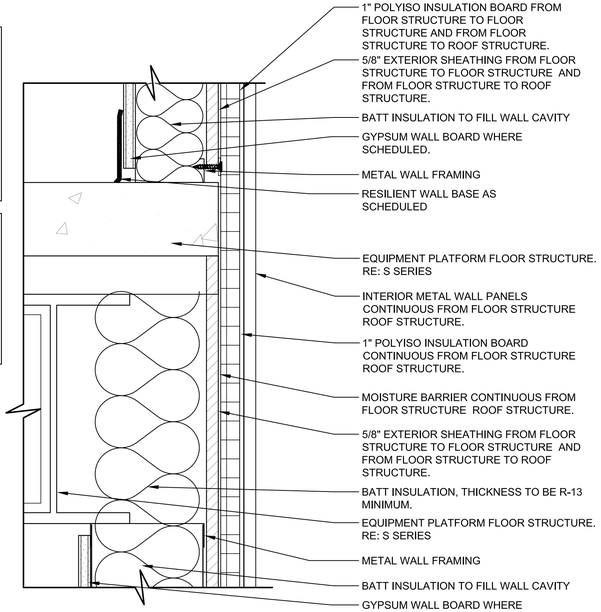

2 EQUIPMENT PLATFORM EDGE DETAIL

SCALE: 3"=1'-0"
FILE: 10296A1090A301.dwg

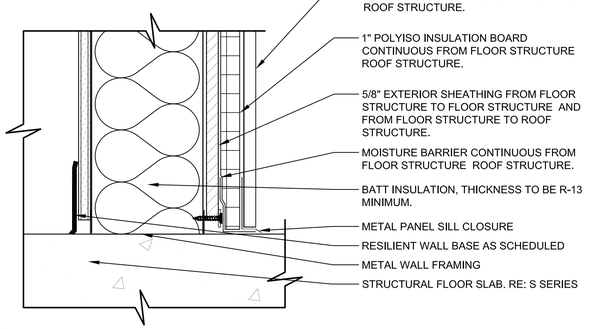

1 INTERIOR METAL FACED PARTITION SILL

SCALE: 3"=1'-0"
FILE: 10296A1090A301.dwg

GENERAL NOTES

1. REFER TO ARCHITECTURAL SCHEDULES AND TYP DETAILS FOR ADDL INFO
2. REFER TO TYP ARCHITECTURAL DETAILS FOR ADDITIONAL INFORMATION RE: 00TA01-00TA08
3. KEY NOTE PREFIX CORRESPONDS TO SPEC DIVISION FOR EACH FACILITY: NOT ALL KEY NOTES ARE PERTINENT TO EVERY SHEET

KEY NOTES

21 ADJACENT PAVEMENT OR GRADE RE: CIVIL
22 TRASH AND RECYCLING RECEPTICLES
31 CONCRETE STRUCTURE RE: S SERIES DWGS
32 CONCRETE CURB OR PAD OR WALL RE: S SERIES DWGS
41 CMU: 12-IN NOM BED WIDTH
42 CMU: 4-IN NOM BED WIDTH
43 CMU: 8-IN NOM BED WIDTH
44 MASONRY CONTROL JOINT
51 STRUCT STEEL FRAME AND DECK RE: S SERIES DWGS
52 STRUCT STEEL STAIR AND LANDING RE: S SERIES DWGS
61 WOOD BLOCKING
71 ROOF ASSEMBLY OR ACCESSORY
72 EXTERIOR WALL PANEL OR ACCESSORY
73 GUTTER AND DOWNSPOUT SYSTEM
74 FOAMED-IN-PLACE MASONRY INSULATION
75 BATT INSULATION FULL WIDTH AND DEPTH OF STUD CAVITY
76 POLYISO BOARD INSULATION
77 INTERIOR WALL METAL PANEL
78 PRE-ENGINEERED METAL BUILDING INSULATION SYSTEM
91 WATER REPELLANT TYP ON CMU AND SLOPED CONC SILL AS INDICATED
92 GYPSUM WALL BOARD
93 CERAMIC WALL TILE
94 SS 48" CORNER GUARDS MOUNTED 12" FROM FLOOR
95 ACOUSTICAL PANEL CEILING
96 FLUID-APPLIED FLOOR COVERING AT SCORED TRANSITION FROM PC.
97 RESILIENT WALL BASE
101 BUILDING SIGNAGE
102 FIRE EXTINGUISHER - SURFACE MOUNTED RE: 1/00TA08
103 FIRE EXTINGUISHER & CABINET
105 METAL LOCKER
106 DEMOUNTABLE PARTITION & SLIDING DOOR
108 TOILET, BATH OR LAUNDRY ACCESSORY
140 EQUIPMENT DAVIT: FLOOR MOUNTED
151 PLUMBING FIXTURE OR ACCESSORY. RE: P SERIES
152 HVAC EQUIPMENT OR ACCESSORY. RE: H SERIES
161 ELECTRICAL EQUIPMENT OR ACCESSORY RE: E SERIES DWGS

REV	DATE	BY	DESCRIPTION
			CONFORMED DOCUMENTS

DESIGNED JTG
DRAWN JTG
CHECKED JTG
DATE NOVEMBER 2022

** ORIGINAL SEALED BY DAVID NEGRETE 06-10-22 TX RA 11640 **

NEGRETE & KOLAR ARCHITECTS,LLP
11720 NORTH IH 35, AUSTIN TEXAS 78753 P: 512.474.6526

carollo TBPELS No. F-882

CITY OF AUSTIN — FOUNDED 1839

CITY OF AUSTIN

CITY OF AUSTIN
WILD HORSE RANCH WWTP EXPANSION
ARCHITECTURAL
ADMINISTRATION BUILDING SECTIONS - A & B

VERIFY SCALES
BAR IS ONE INCH ON ORIGINAL DRAWING
0 1"
IF NOT ONE INCH ON THIS SHEET, ADJUST SCALES ACCORDINGLY

JOB NO. 10976A.00
DRAWING NO. 90A09
SHEET NO. 308 OF 464

LAST SAVED BY: Jason.George

PROJECT NO. 10976A10 FILE NAME: 10976A1090A09.dwg

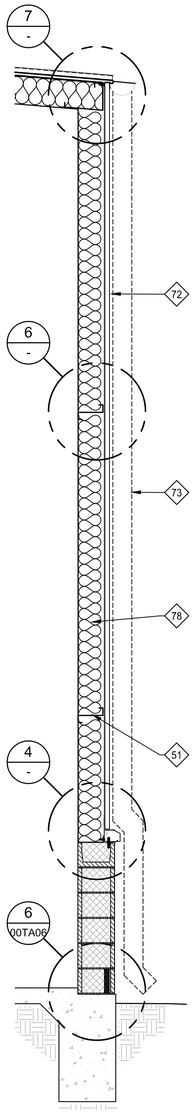

1 WALL SECTION

SCALE: 1/2"=1'-0"
FILE: 10296A1085A301.dwg

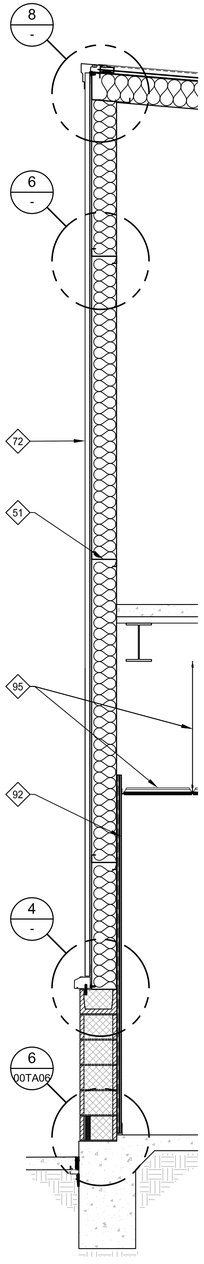

2 WALL SECTION

SCALE: 1/2"=1'-0"
FILE: 10296A1085A301.dwg

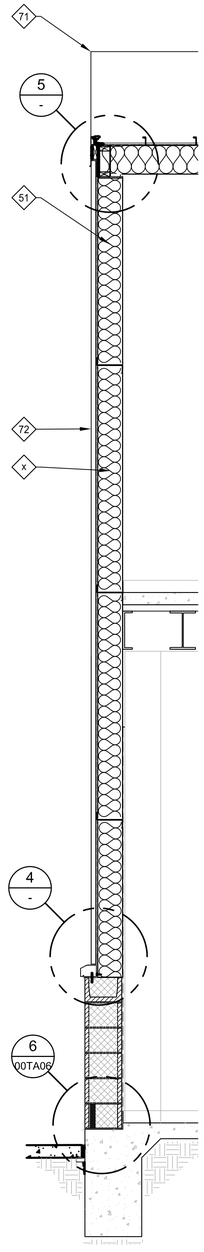

3 WALL SECTION

SCALE: 1/2"=1'-0"
FILE: 10296A1085A302.dwg

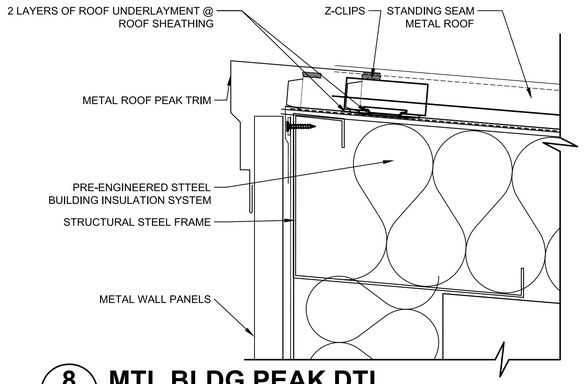

8 MTL BLDG PEAK DTL

SCALE: 3"=1'-0"
FILE: 10296A1085A301.dwg

THIS CONFORMED DOCUMENT IS RELEASED FOR THE CONVENIENCE OF THE CONTRACTOR UNDER THE AUTHORITY OF:

DAVID NEGRETE, R.A. — 11-01-22
TX LIC NO. 11640 — DATE

SEE DISCLAIMER FOR LIMITATIONS OF USE.

CONTRACT DOCUMENTS DATED JUNE 10, 2022, AS PART OF THE BIDDING DOCUMENTS (DRAWINGS AND SPECIFICATIONS) AND SUBSEQUENTLY ISSUED ADDENDA HAVE BEEN MERGED INTO ONE CONFORMING SET OF DOCUMENTS FOR THE CONVENIENCE OF THE CONTRACTOR. IF INCONSISTENCIES OR AMBIGUITIES BETWEEN "CONFORMED" DOCUMENTS AND CONTRACT DOCUMENTS ARE FOUND, THE CONTRACT DOCUMENTS SHALL GOVERN.

GENERAL NOTES

1. REFER TO ARCHITECTURAL SCHEDULES AND TYP DETAILS FOR ADDL INFO
2. REFER TO TYP ARCHITECTURAL DETAILS FOR ADDITIONAL INFORMATION RE: 00TA01-00TA08
3. KEY NOTE PREFIX CORRESPONDS TO SPEC DIVISION FOR EACH FACILITY: NOT ALL KEY NOTES ARE PERTINENT TO EVERY SHEET

KEY NOTES

- 21 ADJACENT PAVEMENT OR GRADE RE: CIVIL
- 22 TRASH AND RECYCLING RECEPTICLES
- 31 CONCRETE STRUCTURE RE: S SERIES DWGS
- 32 CONCRETE CURB OR PAD OR WALL RE: S SERIES DWGS
- 41 CMU: 12-IN NOM BED WIDTH
- 42 CMU: 4-IN NOM BED WIDTH
- 43 CMU: 8-IN NOM BED WIDTH
- 44 MASONRY CONTROL JOINT
- 51 STRUCT STEEL FRAME AND DECK RE: S SERIES DWGS
- 52 STRUCT STEEL STAIR AND LANDING RE: S SERIES DWGS
- 61 WOOD BLOCKING
- 71 ROOF ASSEMBLY OR ACCESSORY
- 72 EXTERIOR WALL PANEL OR ACCESSORY
- 73 GUTTER AND DOWNSPOUT SYSTEM
- 74 FOAMED-IN-PLACE MASONRY INSULATION
- 75 BATT INSULATION FULL WIDTH AND DEPTH OF STUD CAVITY
- 76 POLYISO BOARD INSULATION
- 77 INTERIOR WALL METAL PANEL
- 78 PRE-ENGINEERED METAL BUILDING INSULATION SYSTEM
- 91 WATER REPELLANT TYP ON CMU AND SLOPED CONC SILL AS INDICATED
- 92 GYPSUM WALL BOARD
- 93 CERAMIC WALL TILE
- 94 SS 48" CORNER GUARDS MOUNTED 12" FROM FLOOR
- 95 ACOUSTICAL PANEL CEILING
- 96 FLUID-APPLIED FLOOR COVERING AT SCORED TRANSITION FROM PC.
- 97 RESILIENT WALL BASE
- 101 BUILDING SIGNAGE
- 102 FIRE EXTINGUISHER - SURFACE MOUNTED RE: 1/00TA08
- 103 FIRE EXTINGUISHER & CABINET
- 105 METAL LOCKER
- 106 DEMOUNTABLE PARTITION & SLIDING DOOR
- 108 TOILET, BATH OR LAUNDRY ACCESSORY
- 140 EQUIPMENT DAVIT: FLOOR MOUNTED
- 151 PLUMBING FIXTURE OR ACCESSORY. RE: P SERIES
- 152 HVAC EQUIPMENT OR ACCESSORY. RE: H SERIES
- 161 ELECTRICAL EQUIPMENT OR ACCESSORY RE: E SERIES DWGS

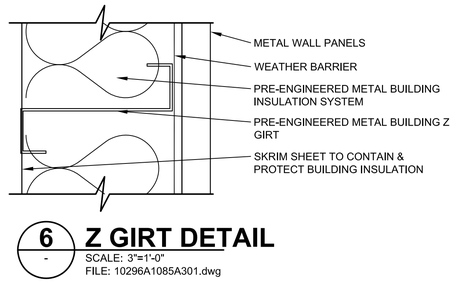

6 Z GIRT DETAIL

SCALE: 3"=1'-0"
FILE: 10296A1085A301.dwg

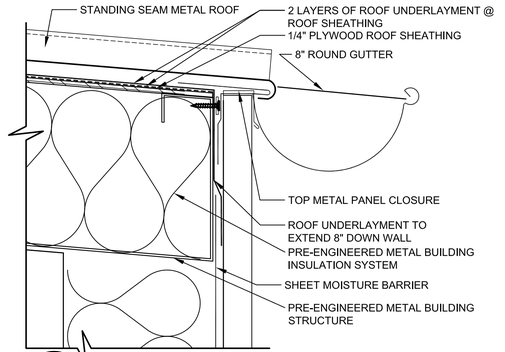

7 ROOF EAVE DETAIL

SCALE: 3"=1'-0"
FILE: 10296A1085A301.dwg

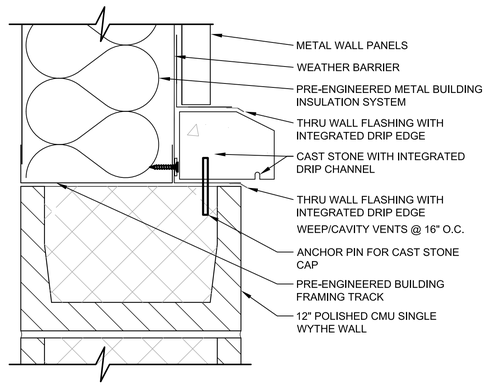

4 CAST STONE WAINSCOT CAP

SCALE: 3"=1'-0"
FILE: 10296A1085A301.dwg

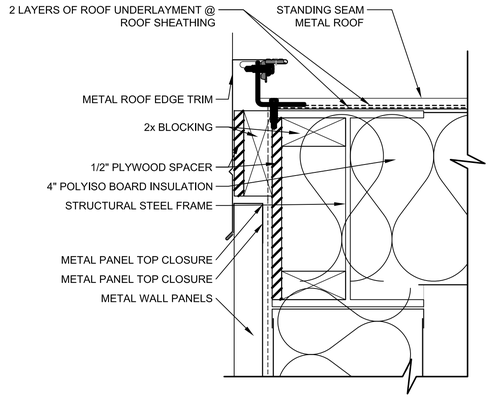

5 METAL BLDG RAKE DTL

SCALE: 3"=1'-0"
FILE: 10296A1085A302.dwg

REV	DATE	BY	DESCRIPTION
			CONFORMED DOCUMENTS

DESIGNED JTG
DRAWN JTG
CHECKED JTG
DATE NOVEMBER 2022

** ORIGINAL SEALED BY DAVID NEGRETE 06-10-22 TX RA 11640 **

NEGRETE & KOLAR ARCHITECTS,LLP
11720 NORTH IH 35, AUSTIN TEXAS 78753 P: 512.474.6526
carollo TBPELS No. F-882

CITY OF AUSTIN

CITY OF AUSTIN
WILD HORSE RANCH WWTP EXPANSION
ARCHITECTURAL
ADMINISTRATION BUILDING
WALL SECTIONS

VERIFY SCALES
BAR IS ONE INCH ON ORIGINAL DRAWING
0 1"
IF NOT ONE INCH ON THIS SHEET, ADJUST SCALES ACCORDINGLY

JOB NO. 10976A.00
DRAWING NO. 90A10
SHEET NO. 309 OF 464

LAST SAVED BY: Jason.George

PROJECT NO. 10976A10 FILE NAME: 10976A1090A10.dwg

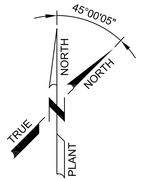

THIS CONFORMED DOCUMENT IS RELEASED FOR THE CONVENIENCE OF THE CONTRACTOR UNDER THE AUTHORITY OF:

11-01-22

DAVID NEGRETE, R.A. DATE
TX LIC NO. 11640

SEE DISCLAIMER FOR LIMITATIONS OF USE.

CONTRACT DOCUMENTS DATED JUNE 10, 2022, AS PART OF THE BIDDING DOCUMENTS (DRAWINGS AND SPECIFICATIONS) AND SUBSEQUENTLY ISSUED ADDENDA HAVE BEEN MERGED INTO ONE CONFORMING SET OF DOCUMENTS FOR THE CONVENIENCE OF THE CONTRACTOR. IF INCONSISTENCIES OR AMBIGUITIES BETWEEN "CONFORMED" DOCUMENTS AND CONTRACT DOCUMENTS ARE FOUND, THE CONTRACT DOCUMENTS SHALL GOVERN.

TOILET ROOM ACCESSORIES

- A TOILET PAPER DISPENSER
- B SOAP DISPENSER
- C PAPER TOWEL DISP./WASTE RECEPTACLE
- D GRAB BAR; LENGTH INDICATED
- E MIRROR; SIZE INDICATED
- F SHOWER CURTAIN RODG FOLDING SHOWER SEAT
- H SHOWER GRAB BARS; LENGTH INDICATED
- I MOP AND BROOM HOLDER
- J SANITARY NAPKIN DISPOSAL
- K HAT AND COAT HOOK

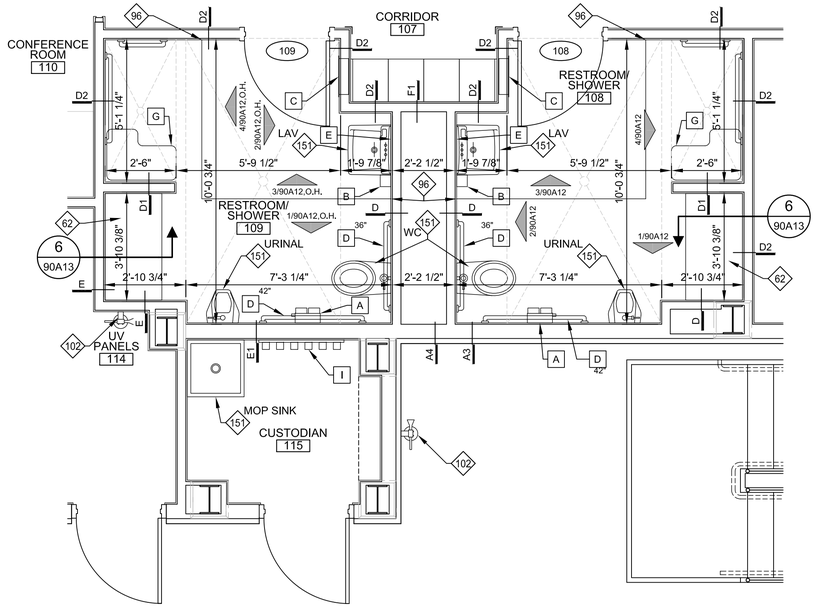

1 ENLARGED RESTROOM PLAN

SCALE: 3/8" = 1'-0"
FILE: 10976A1090A101.dwg

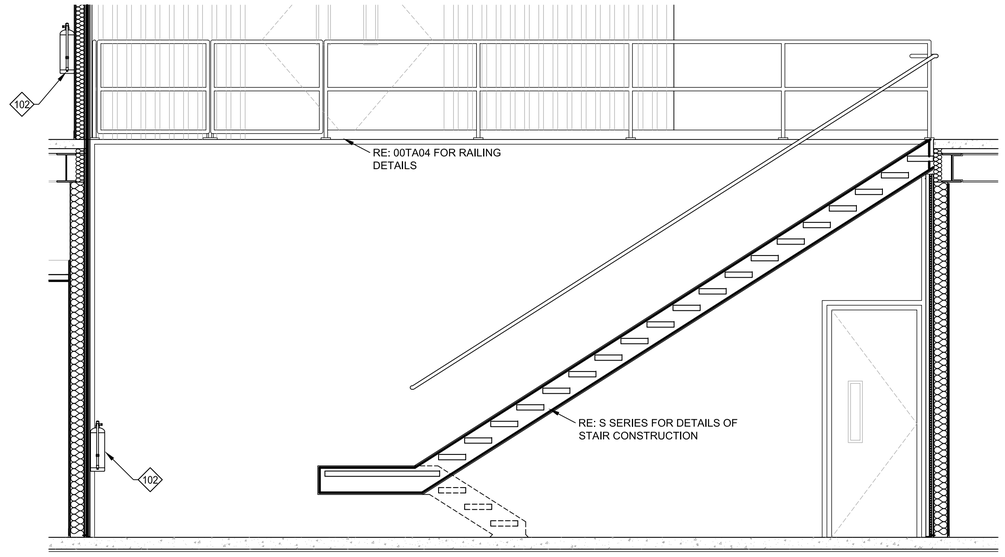

3 STAIR SECTION

SCALE: 3/8" = 1'-0"
FILE: 10976A1090A302.dwg

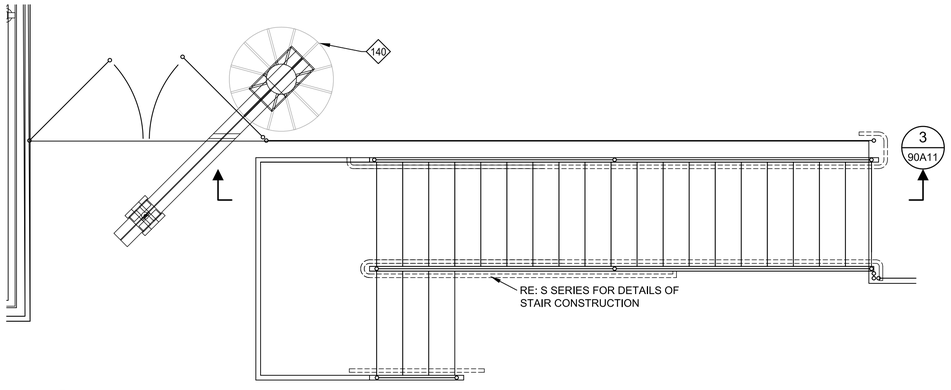

2 ENLARGED STAIR PLAN

SCALE: 3/8" = 1'-0"
FILE: 10976A1090A102.dwg

GENERAL NOTES

1. REFER TO ARCHITECTURAL SCHEDULES AND TYP DETAILS FOR ADDL INFO
2. REFER TO TYP ARCHITECTURAL DETAILS FOR ADDITIONAL INFORMATION RE: 00TA01-00TA08
3. KEY NOTE PREFIX CORRESPONDS TO SPEC DIVISION FOR EACH FACILITY: NOT ALL KEY NOTES ARE PERTINENT TO EVERY SHEET

KEY NOTES

- 21 ADJACENT PAVEMENT OR GRADE RE: CIVIL
- 22 TRASH AND RECYCLING RECEPTICLES
- 31 CONCRETE STRUCTURE RE: S SERIES DWGS
- 32 CONCRETE CURB OR PAD OR WALL RE: S SERIES DWGS
- 41 CMU: 12-IN NOM BED WIDTH
- 42 CMU: 4-IN NOM BED WIDTH
- 43 CMU: 8-IN NOM BED WIDTH
- 44 MASONRY CONTROL JOINT
- 51 STRUCT STEEL FRAME AND DECK RE: S SERIES DWGS
- 52 STRUCT STEEL STAIR AND LANDING RE: S SERIES DWGS
- 61 WOOD BLOCKING
- 71 ROOF ASSEMBLY OR ACCESSORY
- 72 EXTERIOR WALL PANEL OR ACCESSORY
- 73 GUTTER AND DOWNSPOUT SYSTEM
- 74 FOAMED-IN-PLACE MASONRY INSULATION
- 75 BATT INSULATION FULL WIDTH AND DEPTH OF STUD CAVITY
- 76 POLYISO BOARD INSULATION
- 77 INTERIOR WALL METAL PANEL
- 78 PRE-ENGINEERED METAL BUILDING INSULATION SYSTEM
- 91 WATER REPELLANT TYP ON CMU AND SLOPED CONC SILL AS INDICATED
- 92 GYPSUM WALL BOARD
- 93 CERAMIC WALL TILE
- 94 SS 48" CORNER GUARDS MOUNTED 12" FROM FLOOR
- 95 ACOUSTICAL PANEL CEILING
- 96 FLUID-APPLIED FLOOR COVERING AT SCORED TRANSITION FROM PC.
- 97 RESILIENT WALL BASE
- 101 BUILDING SIGNAGE
- 102 FIRE EXTINGUISHER - SURFACE MOUNTED RE: 1/00TA08
- 103 FIRE EXTINGUISHER & CABINET
- 105 METAL LOCKER
- 106 DEMOUNTABLE PARTITION & SLIDING DOOR
- 108 TOILET, BATH OR LAUNDRY ACCESSORY
- 140 EQUIPMENT DAVIT: FLOOR MOUNTED
- 151 PLUMBING FIXTURE OR ACCESSORY. RE: P SERIES
- 152 HVAC EQUIPMENT OR ACCESSORY. RE: H SERIES
- 161 ELECTRICAL EQUIPMENT OR ACCESSORY RE: E SERIES DWGS

REV	DATE	BY	DESCRIPTION
			CONFORMED DOCUMENTS

DESIGNED JTG
DRAWN JTG
CHECKED JTG
DATE NOVEMBER 2022

** ORIGINAL SEALED BY DAVID NEGRETE 06-10-22 TX RA 11640 **

NEGRETE & KOLAR ARCHITECTS,LLP
11720 NORTH IH 35, AUSTIN TEXAS 78753 P: 512.474.6526

carollo
TBPELS No. F-882

CITY OF AUSTIN
FOUNDED 1839

CITY OF AUSTIN

CITY OF AUSTIN
WILD HORSE RANCH WWTP EXPANSION
ARCHITECTURAL
ADMINISTRATION BUILDING
ENLARGED FLOOR PLANS

VERIFY SCALES
BAR IS ONE INCH ON ORIGINAL DRAWING
0 1"
IF NOT ONE INCH ON THIS SHEET, ADJUST SCALES ACCORDINGLY

JOB NO. 10976A.00
DRAWING NO. 90A11
SHEET NO. 310 OF 464

LAST SAVED BY: Jason.George

PROJECT NO. 10976A10 FILE NAME: 10976A1090A11.dwg

THIS CONFORMED DOCUMENT IS RELEASED FOR THE CONVENIENCE OF THE CONTRACTOR UNDER THE AUTHORITY OF:

DAVID NEGRETE, R.A. — 11-01-22 DATE
TX LIC NO. 11640

SEE DISCLAIMER FOR LIMITATIONS OF USE.

CONTRACT DOCUMENTS DATED JUNE 10, 2022, AS PART OF THE BIDDING DOCUMENTS (DRAWINGS AND SPECIFICATIONS) AND SUBSEQUENTLY ISSUED ADDENDA HAVE BEEN MERGED INTO ONE CONFORMING SET OF DOCUMENTS FOR THE CONVENIENCE OF THE CONTRACTOR. IF INCONSISTENCIES OR AMBIGUITIES BETWEEN "CONFORMED" DOCUMENTS AND CONTRACT DOCUMENTS ARE FOUND, THE CONTRACT DOCUMENTS SHALL GOVERN.

GENERAL NOTES

1. REFER TO ARCHITECTURAL SCHEDULES AND TYP DETAILS FOR ADDL INFO
2. REFER TO TYP ARCHITECTURAL DETAILS FOR ADDITIONAL INFORMATION RE: 00TA01-00TA08
3. KEY NOTE PREFIX CORRESPONDS TO SPEC DIVISION FOR EACH FACILITY: NOT ALL KEY NOTES ARE PERTINENT TO EVERY SHEET

KEY NOTES

- 21 ADJACENT PAVEMENT OR GRADE RE: CIVIL
- 22 TRASH AND RECYCLING RECEPTICLES
- 31 CONCRETE STRUCTURE RE: S SERIES DWGS
- 32 CONCRETE CURB OR PAD OR WALL RE: S SERIES DWGS
- 41 CMU: 12-IN NOM BED WIDTH
- 42 CMU: 4-IN NOM BED WIDTH
- 43 CMU: 8-IN NOM BED WIDTH
- 44 MASONRY CONTROL JOINT
- 51 STRUCT STEEL FRAME AND DECK RE: S SERIES DWGS
- 52 STRUCT STEEL STAIR AND LANDING RE: S SERIES DWGS
- 61 WOOD BLOCKING
- 71 ROOF ASSEMBLY OR ACCESSORY
- 72 EXTERIOR WALL PANEL OR ACCESSORY
- 73 GUTTER AND DOWNSPOUT SYSTEM
- 74 FOAMED-IN-PLACE MASONRY INSULATION
- 75 BATT INSULATION FULL WIDTH AND DEPTH OF STUD CAVITY
- 76 POLYISO BOARD INSULATION
- 77 INTERIOR WALL METAL PANEL
- 78 PRE-ENGINEERED METAL BUILDING INSULATION SYSTEM
- 91 WATER REPELLANT TYP ON CMU AND SLOPED CONC SILL AS INDICATED
- 92 GYPSUM WALL BOARD
- 93 CERAMIC WALL TILE
- 94 SS 48" CORNER GUARDS MOUNTED 12" FROM FLOOR
- 95 ACOUSTICAL PANEL CEILING
- 96 FLUID-APPLIED FLOOR COVERING AT SCORED TRANSITION FROM PC.
- 97 RESILIENT WALL BASE
- 101 BUILDING SIGNAGE
- 102 FIRE EXTINGUISHER - SURFACE MOUNTED RE: 1/00TA08
- 103 FIRE EXTINGUISHER & CABINET
- 105 METAL LOCKER
- 106 DEMOUNTABLE PARTITION & SLIDING DOOR
- 108 TOILET, BATH OR LAUNDRY ACCESSORY
- 140 EQUIPMENT DAVIT: FLOOR MOUNTED
- 151 PLUMBING FIXTURE OR ACCESSORY. RE: P SERIES
- 152 HVAC EQUIPMENT OR ACCESSORY. RE: H SERIES
- 161 ELECTRICAL EQUIPMENT OR ACCESSORY RE: E SERIES DWGS

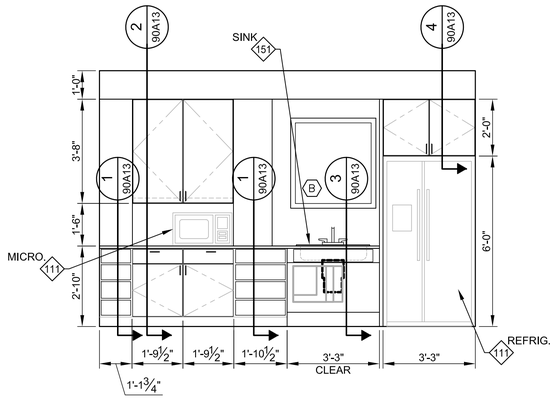

5 BREAK ROOM ELEVATION - EAST

SCALE: 3/8" = 1'-0"
FILE: 10976A1090A505.dwg

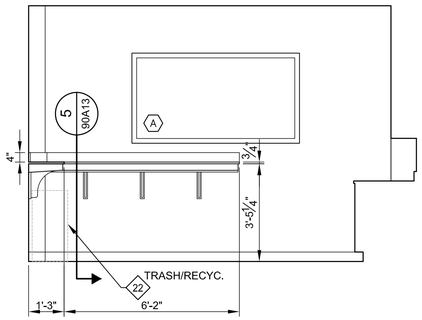

6 BREAK ROOM ELEVATION - NORTH

SCALE: 3/8" = 1'-0"
FILE: 10976A1090A505.dwg

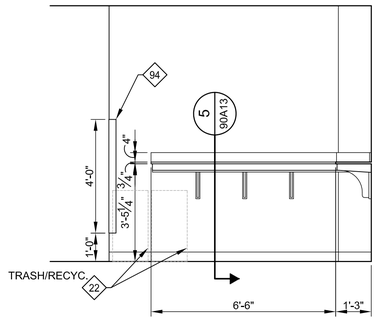

7 BREAK ROOM ELEVATION - WEST

SCALE: 3/8" = 1'-0"
FILE: 10976A1090A505.dwg

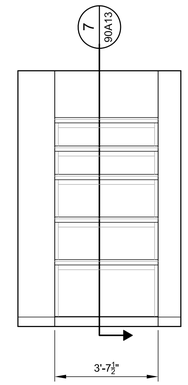

8 CUSTODIAN ELEVATION - EAST

SCALE: 3/8" = 1'-0"
FILE: 10976A1090A505.dwg

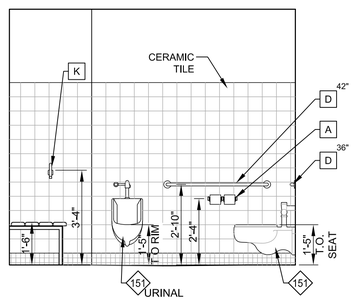

1 RESTROOM ELEVATION - NORTH

SCALE: 3/8" = 1'-0"
FILE: 10976A1090A505.dwg

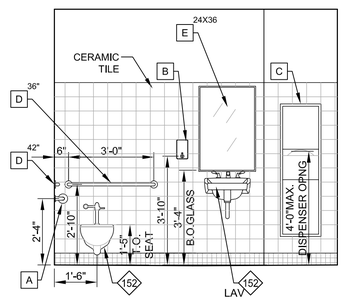

2 RESTROOM ELEVATION - EAST

SCALE: 3/8" = 1'-0"
FILE: 10976A1090A505.dwg

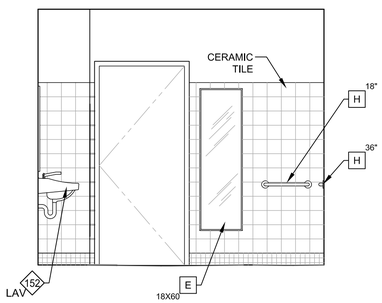

3 RESTROOM ELEVATION - SOUTH

SCALE: 3/8" = 1'-0"
FILE: 10976A1090A505.dwg

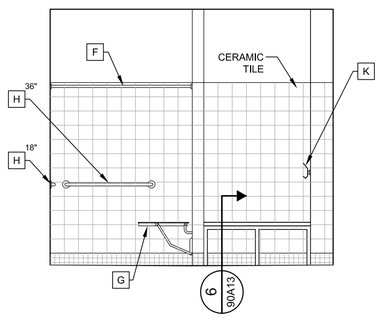

4 RESTROOM ELEVATION - WEST

SCALE: 3/8" = 1'-0"
FILE: 10976A1090A505.dwg

REV	DATE	BY	DESCRIPTION
			CONFORMED DOCUMENTS

DESIGNED JTG
DRAWN JTG
CHECKED JTG
DATE NOVEMBER 2022

** ORIGINAL SEALED BY DAVID NEGRETE 06-10-22 TX RA 11640 **

NEGRETE & KOLAR ARCHITECTS,LLP
11720 NORTH IH 35, AUSTIN TEXAS 78753 P: 512.474.6526

carollo TBPELS No. F-882

CITY OF AUSTIN — FOUNDED 1839

CITY OF AUSTIN

CITY OF AUSTIN
WILD HORSE RANCH WWTP EXPANSION
ARCHITECTURAL
ADMINISTRATION BUILDING INTERIOR ELEVATIONS

VERIFY SCALES
BAR IS ONE INCH ON ORIGINAL DRAWING
0 — 1"
IF NOT ONE INCH ON THIS SHEET, ADJUST SCALES ACCORDINGLY

JOB NO. 10976A.00
DRAWING NO. 90A12
SHEET NO. 311 OF 464

LAST SAVED BY: Jason.George

PROJECT NO. 10976A10 FILE NAME: 10976A1090A12.dwg

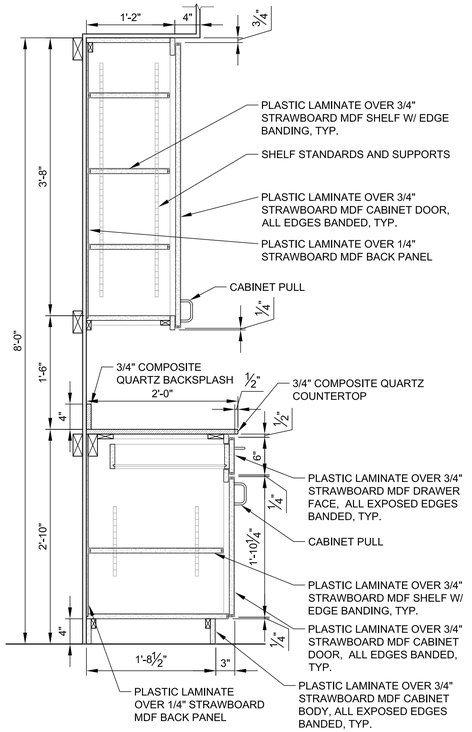

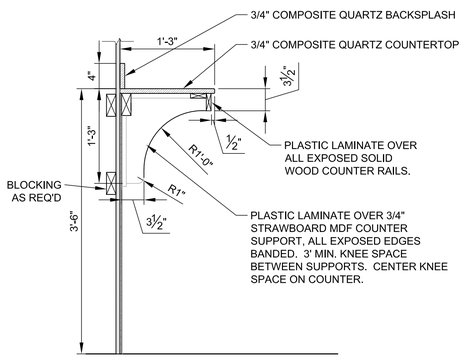

5 COUNTER SECTION

SCALE: 1"=1'-0"
FILE: 10976A1090A601

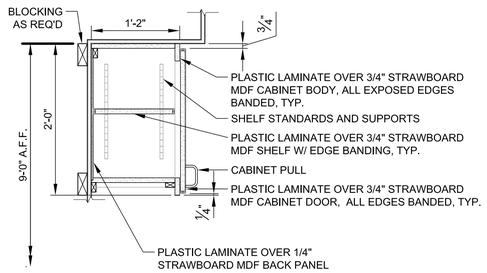

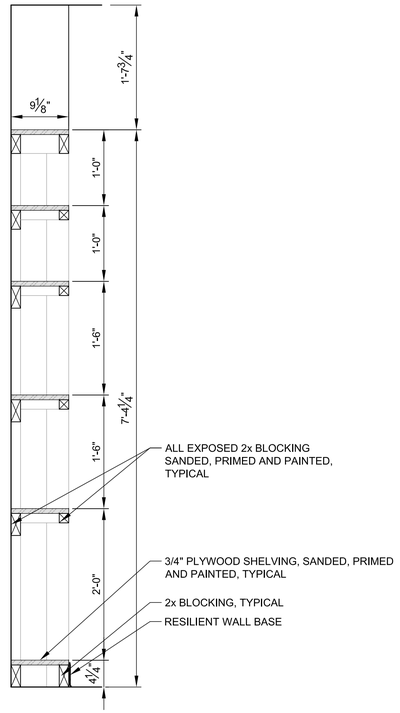

SECURE SHELVES TO WALL FOR LATERAL SUPPORT

2 FULL HEIGHT CABINET SECTION

SCALE: 1"=1'-0"
FILE: 10976A1090A601

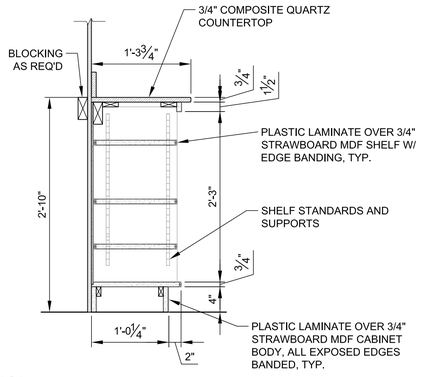

4 HIGH CABINET SECTION

SCALE: 1"=1'-0"
FILE: 10976A1090A601

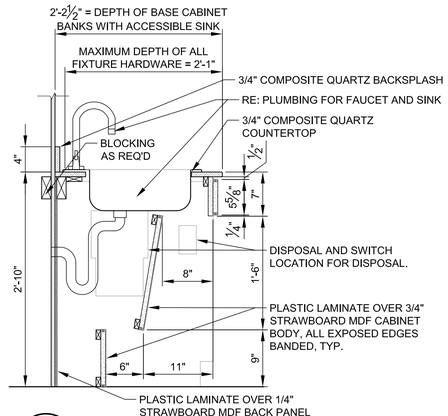

7 SHELVING SECTION

SCALE: 1"=1'-0"
FILE: 10976A1090A601

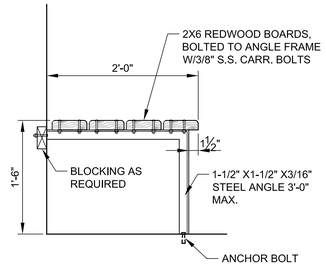

1 LOW SHELF SECTION

SCALE: 1"=1'-0"
FILE: 10976A1090A601

3 CABINET SECTION @ SINK

SCALE: 1"=1'-0"
FILE: 10976A1090A601

6 BENCH SECTION

SCALE: 1"=1'-0"
FILE: 10976A1090A601

THIS CONFORMED DOCUMENT IS RELEASED FOR THE CONVENIENCE OF THE CONTRACTOR UNDER THE AUTHORITY OF:

11-01-22

DAVID NEGRETE, R.A. — DATE
TX LIC NO. 11640

SEE DISCLAIMER FOR LIMITATIONS OF USE.

CONTRACT DOCUMENTS DATED JUNE 10, 2022, AS PART OF THE BIDDING DOCUMENTS (DRAWINGS AND SPECIFICATIONS) AND SUBSEQUENTLY ISSUED ADDENDA HAVE BEEN MERGED INTO ONE CONFORMING SET OF DOCUMENTS FOR THE CONVENIENCE OF THE CONTRACTOR. IF INCONSISTENCIES OR AMBIGUITIES BETWEEN "CONFORMED" DOCUMENTS AND CONTRACT DOCUMENTS ARE FOUND, THE CONTRACT DOCUMENTS SHALL GOVERN.

REV	DATE	BY	DESCRIPTION
			CONFORMED DOCUMENTS

DESIGNED JTG
DRAWN JTG
CHECKED JTG
DATE NOVEMBER 2022

** ORIGINAL SEALED BY DAVID NEGRETE 06-10-22 TX RA 11640 **

NEGRETE & KOLAR ARCHITECTS,LLP
11720 NORTH IH 35, AUSTIN TEXAS 78753 P: 512.474.6526
carollo TBPELS No. F-882
CITY OF AUSTIN FOUNDED 1839 CITY OF AUSTIN

CITY OF AUSTIN
WILD HORSE RANCH WWTP EXPANSION
ARCHITECTURAL
ADMINISTRATION BUILDING CABINET DETAILS

VERIFY SCALES
BAR IS ONE INCH ON ORIGINAL DRAWING
0 — 1"
IF NOT ONE INCH ON THIS SHEET, ADJUST SCALES ACCORDINGLY

JOB NO. 10976A.00
DRAWING NO. 90A13
SHEET NO. 312 OF 464

LAST SAVED BY: Jason.George

PROJECT NO. 10976A10 FILE NAME: 10976A1090A13.dwg

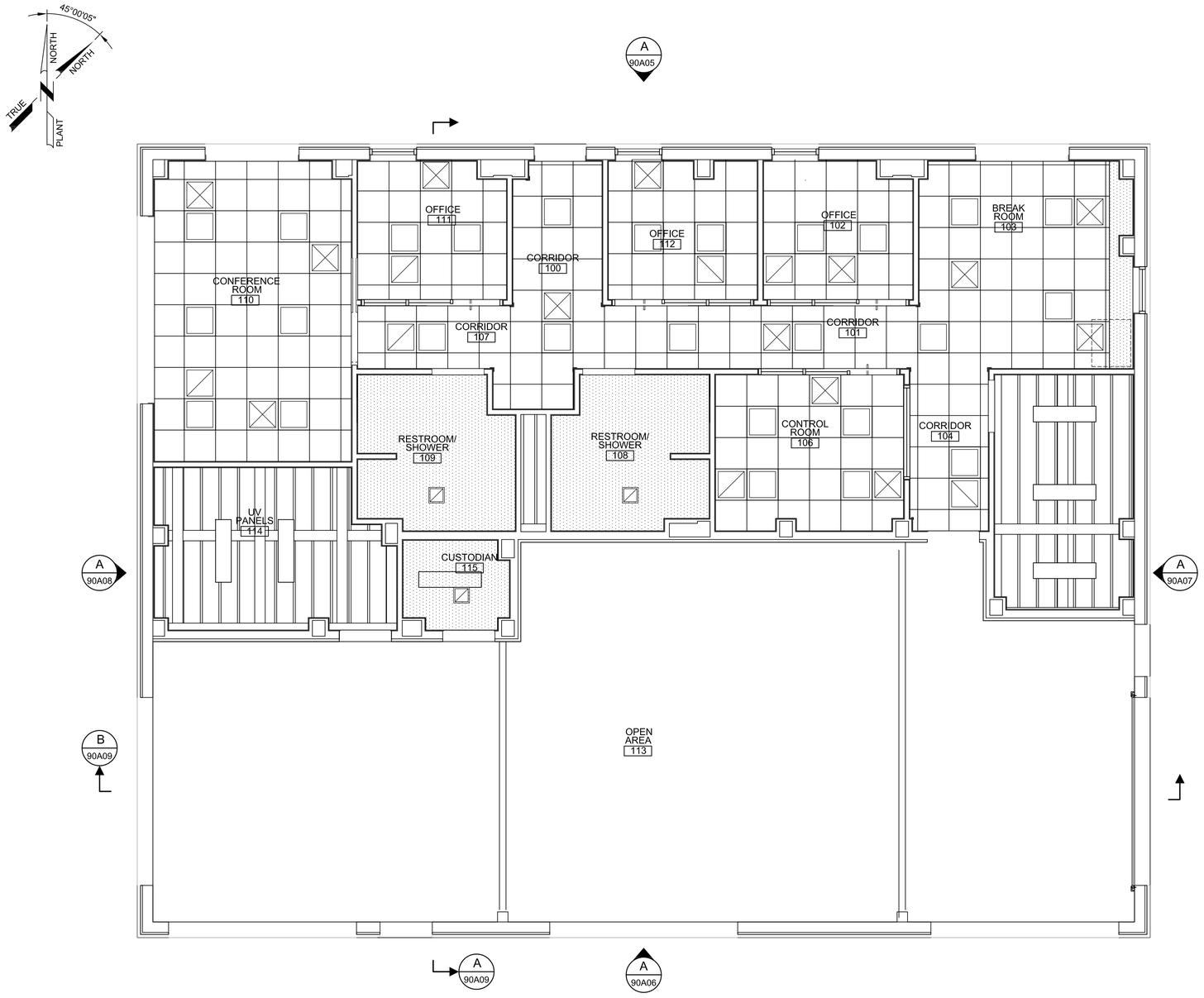

THIS RCP IS PROVIDED TO CLARIFY PLACEMENT OF FIXTURES . FOR MORE INFORMATION REGARDING ELECTRICAL LIGHTING AND HVAC MECHANICAL EQUIPMENT LOCATIONS SEE THE E SERIES AND H SERIES OF DRAWINGS.

THIS CONFORMED DOCUMENT IS RELEASED FOR THE CONVENIENCE OF THE CONTRACTOR UNDER THE AUTHORITY OF:

11-01-22

DAVID NEGRETE, R.A. DATE
TX LIC NO. 11640

SEE DISCLAIMER FOR LIMITATIONS OF USE.

CONTRACT DOCUMENTS DATED JUNE 10, 2022, AS PART OF THE BIDDING DOCUMENTS (DRAWINGS AND SPECIFICATIONS) AND SUBSEQUENTLY ISSUED ADDENDA HAVE BEEN MERGED INTO ONE CONFORMING SET OF DOCUMENTS FOR THE CONVENIENCE OF THE CONTRACTOR. IF INCONSISTENCIES OR AMBIGUITIES BETWEEN "CONFORMED" DOCUMENTS AND CONTRACT DOCUMENTS ARE FOUND, THE CONTRACT DOCUMENTS SHALL GOVERN.

A PLAN - ADMINISTRATION BUILDING - LEVEL 1 REFLECTED CEILING PLAN

SCALE: 1/4"=1'-0"
FILE: 10976A1090A101.dwg

REV	DATE	BY	DESCRIPTION
			CONFORMED DOCUMENTS

DESIGNED JTG
DRAWN JTG
CHECKED JTG
DATE NOVEMBER 2022

** ORIGINAL SEALED BY DAVID NEGRETE 06-10-22 TX RA 11640 **

NEGRETE & KOLAR ARCHITECTS,LLP
11720 NORTH IH 35, AUSTIN TEXAS 78753 P: 512.474.6526

carollo
TBPELS No. F-882

CITY OF AUSTIN

CITY OF AUSTIN
WILD HORSE RANCH WWTP EXPANSION
ARCHITECTURAL
ADMINISTRATION BUILDING
LEVEL ONE REFLECTED CEILING PLAN

VERIFY SCALES
BAR IS ONE INCH ON ORIGINAL DRAWING
0 1"
IF NOT ONE INCH ON THIS SHEET, ADJUST SCALES ACCORDINGLY

JOB NO. 10976A.00
DRAWING NO. 90A14
SHEET NO. 313 OF 464

LAST SAVED BY: Jason.George

PROJECT NO. 10976A10 FILE NAME: 10976A1090A14.dwg

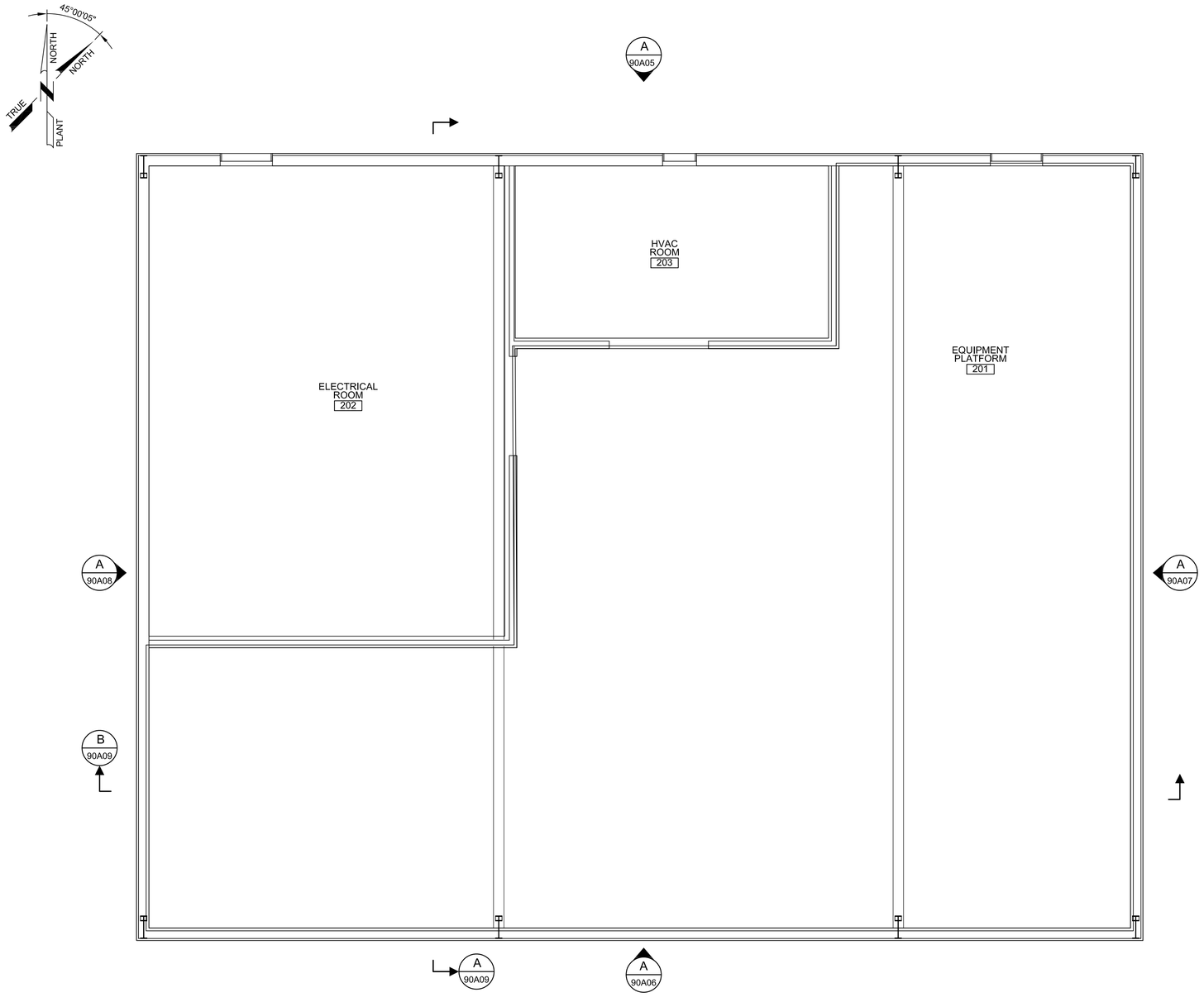

RE: ELECTRICAL LIGHTING PLAN AND HVAC PLAN IN THE E SERIES AND H SERIES.

THIS CONFORMED DOCUMENT IS RELEASED FOR THE CONVENIENCE OF THE CONTRACTOR UNDER THE AUTHORITY OF:

11-01-22

DAVID NEGRETE, R.A. DATE
TX LIC NO. 11640

SEE DISCLAIMER FOR LIMITATIONS OF USE.

CONTRACT DOCUMENTS DATED JUNE 10, 2022, AS PART OF THE BIDDING DOCUMENTS (DRAWINGS AND SPECIFICATIONS) AND SUBSEQUENTLY ISSUED ADDENDA HAVE BEEN MERGED INTO ONE CONFORMING SET OF DOCUMENTS FOR THE CONVENIENCE OF THE CONTRACTOR. IF INCONSISTENCIES OR AMBIGUITIES BETWEEN "CONFORMED" DOCUMENTS AND CONTRACT DOCUMENTS ARE FOUND, THE CONTRACT DOCUMENTS SHALL GOVERN.

A PLAN - ADMINISTRATION BUILDING - EQUIPMENT PLATFORM REFLECTED CEILING PLAN

SCALE: 1/4"=1'-0"
FILE: 10976A1090A101.dwg

REV	DATE	BY	DESCRIPTION
			CONFORMED DOCUMENTS

DESIGNED JTG
DRAWN JTG
CHECKED JTG
DATE NOVEMBER 2022

** ORIGINAL SEALED BY DAVID NEGRETE 06-10-22 TX RA 11640 **

NEGRETE & KOLAR ARCHITECTS,LLP
11720 NORTH IH 35, AUSTIN TEXAS 78753 P: 512.474.6526

carollo
TBPELS No. F-882

CITY OF AUSTIN

CITY OF AUSTIN
WILD HORSE RANCH WWTP EXPANSION
ARCHITECTURAL
ADMINISTRATION BUILDING
EQUIPMENT PLATFORM REFLECTED CEILING PLAN

VERIFY SCALES
BAR IS ONE INCH ON ORIGINAL DRAWING
0 1"
IF NOT ONE INCH ON THIS SHEET, ADJUST SCALES ACCORDINGLY

JOB NO. 10976A.00
DRAWING NO. 90A15
SHEET NO. 314 OF 464

LAST SAVED BY: Jason.George

PROJECT NO. 10976A10 FILE NAME: 10976A1090A15.dwg

CMU NOTES

1. EXTERIOR CMU THIS STRUCTURE: POLISHED FACE, TYPICAL SPRAY ON SEALER AS PER MANUFACTURERS SPECS.
2. RE: STRUCTURAL FOR REINFORCING

CONC FINISH SCHED

1. ALL EXTERIOR CONCRETE SURFACES THIS FACILITY TO RECEIVE A BROOM FINISH
2. ALL INTERIOR CONCRETE SURFACES THIS FACILITY TO RECEIVE A STEEL TROWEL FINISH

RE: SPECIFICATION 03350 FOR ADDL INFO

ABBREVIATIONS

CR	CARD READER
HM	HOLLOW METAL
AL	ALUMINUM
DC	DOOR CONTACT MONITOR
PF	PREFINISHED – FACTORY APPLIED
PNT	PAINT – RE: 09902
GLZ	GLAZING – RE: 08800

ABBREVIATIONS

CONC	CONCRETE
CMU	CONCRETE MASONRY UNITS
PM	SEE PROCESS MECH DWGS FOR COATING
PNT	PAINT – RE: 09902
SC	SEALED CONCRETE
RUB	RUBBED CONCRETE FINISH

INSULATION SCHEDULE

LOCATION	TYPE	R–VAL
METAL ROOF	GLASS FIBER BLANKET INSULATION – RE: 07210	8" R–26 MIN.
EXTERIOR WALLS	GLASS FIBER BLANKET INSULATION – RE: 07213	8" R–13 MIN.
INTERIOR WALLS SEP.COND.SPACE	GLASS FIBER BLANKET INSULATION – RE: 07213	6" R–13 MIN.
EXTERIOR CMU	FOAMED–IN–PLACE INSULATION – RE: 07214	R–13 MIN.

DOOR NOTES

1. RE: DIVISION–8 SPECIFICATIONS FOR ADDITIONAL INFORMATION
2. SCHEDULED ACCESS CONTROL FUNCTIONS TO BE VERIFIED WITH SECURITY PACKAGE
3. RE: ABBREVIATIONS LEGEND THIS SHEET.

RM FINISH NOTES

1. RE: CONCRETE FINISHES SPECIFICATION FOR ADDITIONAL INFORMATION
2. RE: ABBREVIATIONS LEGEND THIS SHEET

SIGNAGE SCHEDULE

LOCATION	TYPE	SIZE	TEXT	NOTES
NORTH ELEVATION	C	12" H	AB	
SOUTH ELEVATION	C	12" H	AB	
DOOR 102	A	6" x 8"	102 / OFFICE	
DOOR 103	A	6" x 8"	103 / OFFICE	
DOOR 104	A	6" x 8"	104 / BREAK ROOM	
DOOR 106	A	6" x 8"	106 / IT–SCADA SERVER	
DOOR 107	A	6" x 8"	107 / CONTROL ROOM	
DOOR 108	A	6" x 8"	108 / UNISEX	TOILET & SHOWER SYMBOLS
DOOR 109	A	6" x 8"	109 / UNISEX	TOILET & SHOWER SYMBOLS
DOOR 110	A	6" x 8"	110 / CONFERENCE ROOM	
DOOR 111	A	6" x 8"	111 / OFFICE	
DOOR 113.1	A	6" x 8"	113 / MAINTENANCE AREA	
DOOR 113.3	A	6" x 8"	113 / MAINTENANCE AREA	
DOOR 114	A	6" x 8"	114 / UV PANELS	
DOOR 115	A	6" x 8"	115 / CUSTODIAN	
DOOR 202	A	6" x 8"	202 / ELECTRICAL ROOM	
DOOR 202	B	14" X 10"	NOTICE: BY ORDER OF THE AUSTIN FIRE DEPARTMENT	LOCATION: INTERIOR SIDE
			THIS ROOM SHALL NOT BE USED FOR STORAGE	OF DOOR
			OF ANY KIND OR FOR ANY DURATION	
DOOR 203	A	6" x 8"	203 / HVAC ROOM	
DOOR 80ER1	B	14" X 10"	NOTICE: BY ORDER OF THE AUSTIN FIRE DEPARTMENT	LOCATION: INTERIOR SIDE
			THIS ROOM SHALL NOT BE USED FOR STORAGE	OF DOOR
			OF ANY KIND OR FOR ANY DURATION	
DOOR 80ER2	B	14" X 10"	NOTICE: BY ORDER OF THE AUSTIN FIRE DEPARTMENT	LOCATION: INTERIOR SIDE
			THIS ROOM SHALL NOT BE USED FOR STORAGE	OF DOOR
			OF ANY KIND OR FOR ANY DURATION	

WINDOW TYPES

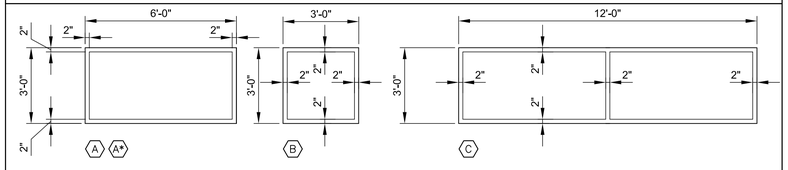

DOOR TYPES

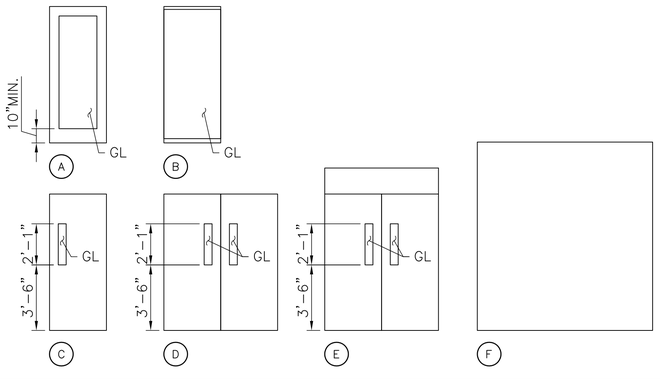

NOTES

1. SEE SCHEDULE FOR REQD LOCATIONS
2. SEE SCHEDULE FOR FRAME SIZE, MATERIAL, AND DETAIL REFERENCES
3. PROVIDE LABELED DOORS PER DOOR SCHEDULE
4. GLASS AT DOORS SHALL BE TEMPERED
5. GLASS AT EXTERIOR DOORS SHALL BE TINTED

DOOR FRAME TYPES

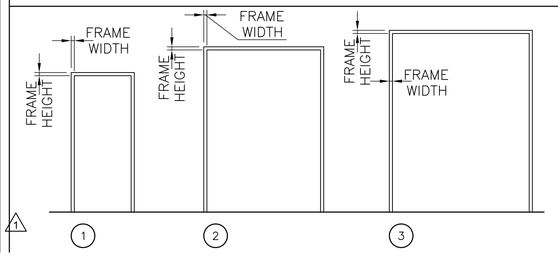

NOTES

1. RE: DOOR SCHEDULE FOR LOCATIONS REQD
2. RE: DOOR SCHEDULE FOR FRAME SIZE, MATERIAL, AND DETAIL REFERENCES
3. VERIFY ALL FRAME SIZES AND ROUGH OPENING REQUIREMENTS PRIOR TO FABRICATION

CONTRACT DOCUMENTS DATED JUNE 10, 2022, AS PART OF THE BIDDING DOCUMENTS (DRAWINGS AND SPECIFICATIONS) AND SUBSEQUENTLY ISSUED ADDENDA HAVE BEEN MERGED INTO ONE CONFORMING SET OF DOCUMENTS FOR THE CONVENIENCE OF THE CONTRACTOR. IF INCONSISTENCIES OR AMBIGUITIES BETWEEN "CONFORMED" DOCUMENTS AND CONTRACT DOCUMENTS ARE FOUND, THE CONTRACT DOCUMENTS SHALL GOVERN.

THIS CONFORMED DOCUMENT IS RELEASED FOR THE CONVENIENCE OF THE CONTRACTOR UNDER THE AUTHORITY OF:

DAVID NEGRETE, R.A.
TX LIC NO. 11640

11-01-22
DATE

SEE DISCLAIMER FOR LIMITATIONS OF USE.

DOOR AND HARDWARE SCHEDULE

DOOR NO	DOOR WIDTH	DOOR HEIGHT	DOOR THICK	DOOR TYPE	DOOR MATL	DOOR FINISH	FRAME WIDTH	FRAME HEIGHT	FRAME THICK	FRAME TYPE	FRAME MATL	FRAME FINISH	DETAILS (RE: 00TA05) HEAD	JAMB	SILL	HARDWARE GROUP	FIRE LABEL	LOUVER SIZE	ACCESS CONTROL	REMARKS	DOOR NO
100	3'0"	7'0"	1.75	A	GLZ/AL	PF	2"	2"	4 1/2"	1	ALUM	PF	G/AJ105	C&G/AJ107	E/AJ109	C715A	--	--	CR, DC	STOREFRONT DOOR	100
102	3'0"	7'0"	1.75	B	GLZ/AL	PF	2"	2"	3 1/2"	--	ALUM	PF	2A/00TA07	--	2B/00TA07	001	--	--	--	PER DEMOUNTABLE PARTITION MFR	102
103	3'0"	7'0"	1.75	B	GLZ/AL	PF	2"	2"	3 1/2"	--	ALUM	PF	2A/00TA07	--	2B/00TA07	001	--	--	--	PER DEMOUNTABLE PARTITION MFR	103
105	3'0"	8'0"	1.75	C	HM	PNT	2"	2"	4-1/2"	1	HM	PNT	G/AJ105	G/AJ107	E/AJ109	701R	--	--	--	--	105
106	3'0"	8'0"	1.75	C	HM	PNT	2"	2"	4-1/2"	1	HM	PNT	A/AJ105	A/AJ107	B/AJ109	C201	--	--	CR, DC	--	106
107	3'0"	7'0"	1.75	B	GLZ/AL	PF	2"	2"	3 1/2"	--	ALUM	PF	2A/00TA07	--	2B/00TA07	001	--	--	--	PER DEMOUNTABLE PARTITION MFR	107
108	3'0"	7'0"	1.75	C	HM	PNT	2"	2"	4-1/2"	1	HM	PNT	A/AJ105	A/AJ107	B/AJ109	301F	--	--	--	NO LITE IN DOOR	108
109	3'0"	7'0"	1.75	C	HM	PNT	2"	2"	4-1/2"	1	HM	PNT	A/AJ105	A/AJ107	B/AJ109	301F	--	--	--	NO LITE IN DOOR	109
110	3'0"	7'0"	1.75	A	HM	PNT	2"	2"	3 1/2"	1	STL/WD	PNT	1A/00TA07	1B/00TA07	--	001	--	--	--	--	110
111	3'0"	7'0"	1.75	B	GLZ/AL	PF	2"	2"	3 1/2"	--	ALUM	PF	2A/00TA07	--	2B/00TA07	001	--	--	--	PER DEMOUNTABLE PARTITION MFR	111
113.1	3'0"	7'0"	1.75	C	HM	PNT	2"	2"	4-1/2"	1	HM	PNT	G/AJ105	C&G/AJ107	E/AJ109	C715	--	--	CR	--	113.1
113.2	12'0"	14'0"	1.75	F	STL	PNT	2"	2"	8"	3	ALUM	PNT	2/85A10, SIM	2/85A10, SIM	2/85A10, SIM	D001	--	--	MO	--	113.2
113.3	3'0"	7'0"	1.75	C	HM	PNT	2"	2"	4-1/2"	1	HM	PNT	G/AJ105	C&G/AJ107	E/AJ109	C715	--	--	CR	--	113.3
114	3'0"	8'0"	1.75	C	ALUM	PF	2"	2"	3 1/2"	2	HM	PNT	G/AJ105	G/AJ107	E/AJ109	501AC	--	--	--	--	114
115	3'0"	7'0"	1.75	C	ALUM	PF	2"	2"	3 1/2"	2	HM	PNT	G/AJ105	G/AJ107	E/AJ109	203AS	--	--	--	--	115
202	6'0"	9'0"	1.75	E	HM	PNT	2"	2"	4-1/2"	1	HM	PNT	G/AJ105	G/AJ107	E/AJ109	C710CMR	--	--	CR	REMOVABLE 2'x6' TRANSOM	202
203	6'0"	7'0"	1.75	D	HM	PNT	2"	2"	8"	2	HM	PNT	G/AJ105	G/AJ107	E/AJ109	200ACR	--	--	--	--	203
80ER1	6'0"	9'0"														C001			CR	REUSE EXISTING, PROVIDE NEW CARD READER LOCATED AT ADJACENT OPS BLDG ELECTRICAL ROOM	80ER1
80ER2	3'0"	9'0"														C001			CR	REUSE EXISTING, PROVIDE NEW CARD READER LOCATED AT ADJACENT OPS BLDG ELECTRICAL ROOM	80ER2

ROOM FINISH SCHEDULE

ROOM NO	ROOM NAME	FLOOR MATL	FLOOR FINISH	BASE MATL	NORTH WALL MATL	NORTH WALL FINISH	SOUTH WALL MATL	SOUTH WALL FINISH	EAST WALL MATL	EAST WALL FINISH	WEST WALL MATL	WEST WALL FINISH	CEILING MATL	CEILING HEIGHT	CEILING FINISH	REMARKS	ROOM NO
100	CORRIDOR	CONC	PC	RB	GYP	PNT	GYP	PNT	GYP	PNT	GYP	PNT	ACT	9'-0"	--	STOREFRONT DOOR IS PF	100
101	CORRIDOR	CONC	PC	RB	GYP	PNT	GYP	PNT	--	--	--	--	ACT	9'-0"	--	DEMOUNTABLE PARTITIONS ARE PF	101
102	OFFICE	CONC	PC	RB	GYP	PNT	GYP	PNT	GYP	PNT	GYP	PNT	ACT	9'-0"	--	DEMOUNTABLE PARTITION & WINDOW ARE PF	102
103	OFFICE	CONC	PC	RB	GYP	PNT	GYP	PNT	GYP	PNT	GYP	PNT	ACT	9'-0"	--	DEMOUNTABLE PARTITION & WINDOW ARE PF	103
104	BREAK ROOM	CONC	PC	RB	GYP	PNT	GYP	PNT	GYP	PNT	GYP	PNT	ACT	9'-0"	--	WINDOWS ARE PF	104
105	CORRIDOR	CONC	PC	RB	--	--	GYP	PNT	GYP	PNT	GYP	PNT	ACT	9'-0"	--	WINDOWS ARE PF	105
106	IT/SCADA SERVER	CONC	PC	RB	GYP	PNT	GYP	PNT	GYP	PNT	GYP	PNT	STRUCT	RE: BUILDING SECTIONS	PNT	WINDOWS ARE PF	106
107	CONTROL ROOM	CONC	PC	RB	GYP	PNT	GYP	PNT	GYP	PNT	GYP	PNT	ACT	9'-0"	--	DEMOUNTABLE PARTITION & WINDOW ARE PF	107
108	RESTROOM/SHOWER	CONC	PC/FAF	CT	GYP	CT/PNT	GYP	CT/PNT	GYP	CT/PNT	GYP	CT/PNT	GYP	9'-0"	PNT	DEMOUNTABLE PARTITION & WINDOW ARE PF	108
109	RESTROOM/SHOWER	CONC	PC/FAF	CT	GYP	CT/PNT	GYP	CT/PNT	GYP	CT/PNT	GYP	CT/PNT	GYP	9'-0"	PNT	DEMOUNTABLE PARTITION & WINDOW ARE PF	109
110	CONFERENCE ROOM	CONC	PC	RB	GYP	PNT	GYP	PNT	GYP	PNT	GYP	PNT	ACT	9'-0"	--	WINDOWS ARE PF	110
111	OFFICE	CONC	PC	RB	GYP	PNT	GYP	PNT	GYP	PNT	GYP	PNT	ACT	9'-0"	--	DEMOUNTABLE PARTITION & WINDOW ARE PF	111
112	CORRIDOR	CONC	PC	RB	GYP	PNT	GYP	PNT	--	--	GYP	PNT	ACT	9'-0"	--	DEMOUNTABLE PARTITIONS ARE PF	112
113	MAINTENANCE AREA	CONC	SC	--	MTL PNL	PF	STRUCT	--	STRUCT	--	STRUCT	--	STRUCT	RE: BUILDING SECTIONS	PNT	WINDOWS ARE PF	113
114	UV PANELS	CONC	SC	RB	GYP	PNT	GYP	PNT	GYP	PNT	GYP	PNT	STRUCT	RE: BUILDING SECTIONS	PNT	--	114
115	CUSTODIAN	CONC	SC	RB	GYP	PNT	GYP	PNT	GYP	PNT	GYP	PNT	GYP	9'-0"	PNT	--	115
201	EQUIPMENT PLATFORM	CONC	SC	RB	STRUCT	--	--	--	--	--	MTL PNL	PF	STRUCT	RE: BUILDING SECTIONS	PNT	--	201
202	ELECTRICAL ROOM	CONC	SC	RB	STRUCT	--	GYP	PNT	GYP	PNT	STRUCT	--	STRUCT	RE: BUILDING SECTIONS	PNT	--	202
203	HVAC ROOM	CONC	SC	RB	STRUCT	--	GYP	PNT	GYP	PNT	GYP	PNT	STRUCT	RE: BUILDING SECTIONS	PNT	--	203

ABBREVIATIONS

AL	ALUMINUM
HM	HOLLOW METAL
PF	PREFINISHED – FACTORY APPLIED
PNT	PAINT – RE: 09902

WINDOW SCHEDULE

WNDW MARK	APPROX SIZE WIDTH	APPROX SIZE HEIGHT	FRAME MATL	FRAME FINISH	WNDW TYPE	HEAD	SILL	JAMB	SHEET NUMBER	GLASS TYPE	REMARKS	WNDW MARK
A	6'0"	3'0"	AL	PF	ALUM	3A	3C	3B	00T07	IGU	*RE: BUILDING ELEVATIONS	A
A*	6'0"	3'0"	AL	PF	ALUM	4A	4C	4B	00T07	MONOLITHIC	INTERIOR LOCATION, CLEAR GLAZING WITH NO TINT	A*
B	3'0"	3'0"	AL	PF	ALUM	3A	3C	3B	00T07	IGU	*RE: BUILDING ELEVATIONS	B
C	12'0"	3'0"	AL	PF	ALUM	3A	3C	3B	00T07	IGU	*RE: BUILDING ELEVATIONS	C

REV	DATE	BY	DESCRIPTION
1	09-06-22	JTG	ADDENDUM NO. 5

CONFORMED DOCUMENTS

DESIGNED JTG
DRAWN JTG
CHECKED JTG
DATE NOVEMBER 2022

** ORIGINAL SEALED BY DAVID NEGRETE 06-10-22 TX RA 11640 **

NEGRETE & KOLAR ARCHITECTS,LLP
11720 NORTH IH 35, AUSTIN TEXAS 78753 P: 512.474.6526

carollo
TBPELS No. F-882

CITY OF AUSTIN
FOUNDED 1839
CITY OF AUSTIN

CITY OF AUSTIN
WILD HORSE RANCH WWTP EXPANSION
ARCHITECTURAL
ADMINISTRATION BUILDING SCHEDULES

VERIFY SCALES
BAR IS ONE INCH ON ORIGINAL DRAWING
0 1"
IF NOT ONE INCH ON THIS SHEET, ADJUST SCALES ACCORDINGLY

JOB NO. 10976A.00
DRAWING NO. 90A16
SHEET NO. 315 OF 464

LAST SAVED BY: Jason.George

PROJECT NO. 10976A10 FILE NAME: 10976A1090A16.dwg

PARTITION NOTES

1. WHERE GYPSUM WALLBOARD IS NOT APPLIED TO BOTH SIDES OF PARTITION FRAMING, INSTALL HORIZONTAL BRIDGING.
2. BOTTOM OF STRUCTURE REFERS TO BOTTOM OF: METAL FLOOR DECK, METAL ROOF DECK, CONCRETE DECK, CONCRETE ROOF, PLYWOOD SHEATHING OR WHICHEVER IS APPLICABLE.
3. BOTTOM OF STRUCTURAL FRAMING REFERS TO BOTTOM OF: STEEL BEAM, STEEL GIRDER, STEEL BAR JOIST, STEEL PURLIN, METAL FLOOR JOIST, METAL ROOF JOIST, METAL RAFTER, METAL TRUSS, CONCRETE BEAM, CONCRETE TEE, WOOD FLOOR JOIST, WOOD ROOF JOIST, WOOD RAFTER OR WOOD TRUSS, WHICHEVER IS APPLICABLE.
4. INSULATE WITH THERMAL INSULATION ALL PARTITION WALLS SEPARATING CONDITIONED SPACE FROM NON-CONDITIONED SPACE. MEET SPECIFIED R-VALUE FOR EXTERIOR BUILDING WALLS.
5. REFER TO A951 & A952 FOR INFORMATION ON PARTITION INTERSECTIONS AND CEILING CONDITIONS.

PARTITION KEY

PARTITION TYPE A - A941
PARTITION TYPE B - A942
PARTITION TYPE C - A943
PARTITION TYPE D - A944
PARTITION TYPE E - A945
PARTITION TYPE F - A946

THIS CONFORMED DOCUMENT IS RELEASED FOR THE CONVENIENCE OF THE CONTRACTOR UNDER THE AUTHORITY OF:

11-01-22

DAVID NEGRETE, R.A. DATE
TX LIC NO. 11640

SEE DISCLAIMER FOR LIMITATIONS OF USE.

CONTRACT DOCUMENTS DATED JUNE 10, 2022, AS PART OF THE BIDDING DOCUMENTS (DRAWINGS AND SPECIFICATIONS) AND SUBSEQUENTLY ISSUED ADDENDA HAVE BEEN MERGED INTO ONE CONFORMING SET OF DOCUMENTS FOR THE CONVENIENCE OF THE CONTRACTOR. IF INCONSISTENCIES OR AMBIGUITIES BETWEEN "CONFORMED" DOCUMENTS AND CONTRACT DOCUMENTS ARE FOUND, THE CONTRACT DOCUMENTS SHALL GOVERN.

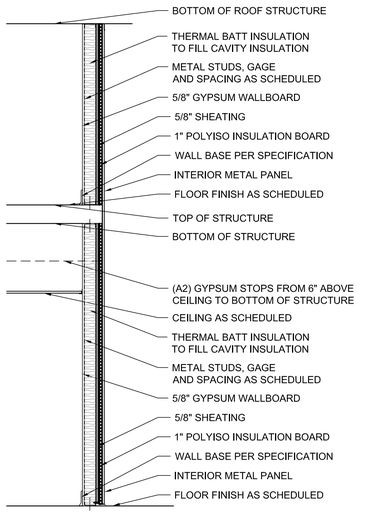

A4 INSULATED 6" STUD WITH NO CEILING OR BASE ONE SIDE, COMPLETE METAL PANEL ASSEMBLY ON OTHER
A3 6" METAL STUD WITH CERAMIC TILE AND BASE ON MOISTURE RESISTANT GYPSUM WALL BOARD
A2 GYPSUM STOPS 6" ABOVE SCHEDULED CEILING
A1 3 5/8" METAL STUD PARTITION
A 6" METAL STUD PARTITION

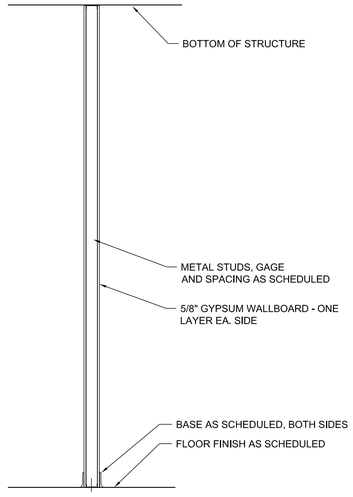

B 3 5/8" METAL STUD PARTITION

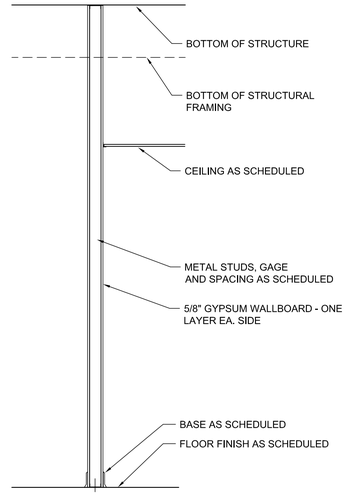

C 3 5/8" METAL STUD PARTITION

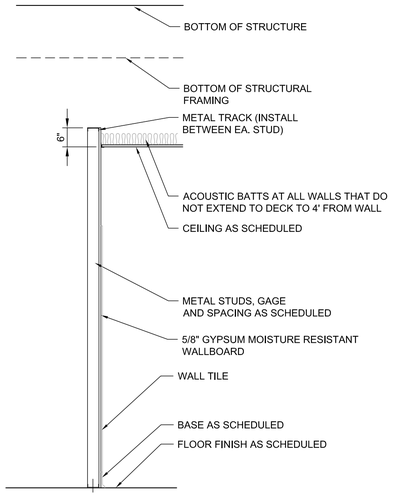

D 3 5/8" METAL STUD FURRING PARTITION WITH CERAMIC TILE
D1 ALL FINISHES ON BOTH SIDES
D2 ADD 5/8" PAPERLESS GYP BOARD, WALL BASE, CEILING, AND SOUND BATT TO OPPOSITE SIDE

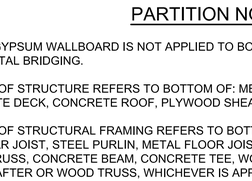

A END AND BUTT JOINT

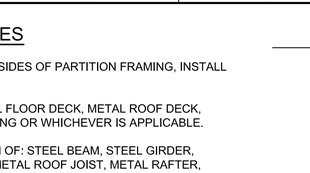

B INTERSECTION

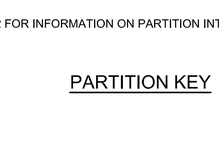

C DOOR AT CORNER

D INTERSECTION

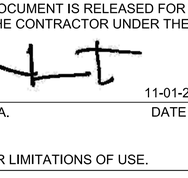

E CORNER

F INTERSECTION

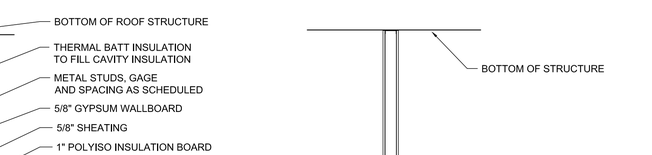

A THRU CEILING
B THRU CEILING

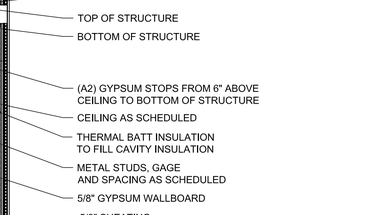

C FLOOR
D ROOF DECK

NOTES:
1. REFERENCE PLANS FOR PARTITION TYPES AND PARTITION SCHEDULE FOR METAL STUD SIZE.
2. ALL GYPSUM WALL BOARD SHALL BE 5/8" THICK UNLESS INDICATED OTHERWISE ON THE DWGS.

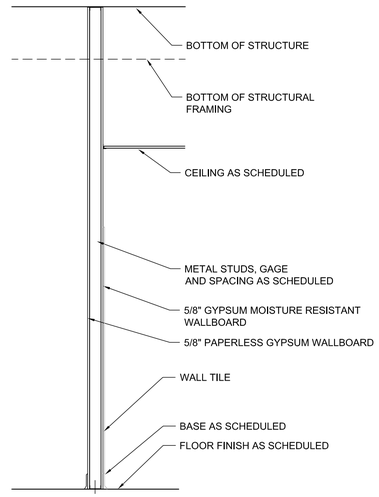

E 3-5/8" METAL STUD FULL HEIGHT PARTITION, GYPSUM BOARD ON ONE SIDE, CERAMIC TILE ON OTHER
E1 CEILING ON BOTH SIDES

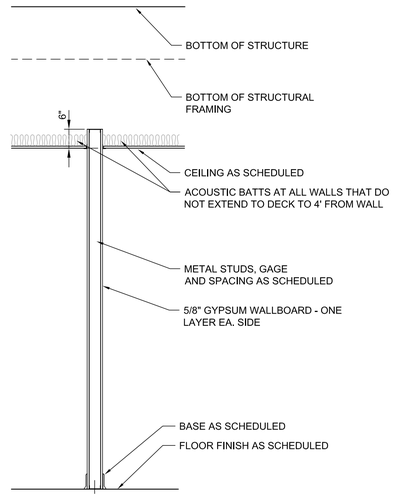

F 3 5/8" METAL STUD PARTITION
F1 BARE STUDS AND NO CEILING ON ONE SIDE

REV	DATE	BY	DESCRIPTION

CONFORMED DOCUMENTS

DESIGNED JTG
DRAWN JTG
CHECKED JTG
DATE NOVEMBER 2022

** ORIGINAL SEALED BY DAVID NEGRETE 06-10-22 TX RA 11640 **

NEGRETE & KOLAR ARCHITECTS,LLP
11720 NORTH IH 35, AUSTIN TEXAS 78753 P: 512.474.6526
carollo TBPELS No. F-882

CITY OF AUSTIN

CITY OF AUSTIN
WILD HORSE RANCH WWTP EXPANSION
ARCHITECTURAL
ADMINISTRATION BUILDING
PARTITION TYPES & DETAILS

VERIFY SCALES
BAR IS ONE INCH ON ORIGINAL DRAWING
0 1"
IF NOT ONE INCH ON THIS SHEET, ADJUST SCALES ACCORDINGLY

JOB NO. 10976A.00
DRAWING NO. 90A17
SHEET NO. 316 OF 464

LAST SAVED BY: Jason.George

PROJECT NO. 10976A10 FILE NAME: 10976A1090A17.dwg

Plot Date: 10-OCT-2022 11:56:45 AM
User: LDietzel
PlotScale: 1:1
DesignScript: Carollo_Std_Pen_v0905.pen
ColorTable: gshade.ctb
Model: Layout1
LAST SAVED BY: eratcliff

GENERAL NOTES:

1. USE STRUCTURAL DRAWINGS IN CONJUNCTION WITH PROJECT DRAWINGS BY OTHER DISCIPLINES AND WITH THE SPECIFICATIONS.

2. UNLESS DETAILED, SPECIFIED, OR INDICATED OTHERWISE, CONSTRUCTION SHALL BE AS INDICATED IN THE GENERAL NOTES AND TYPICAL DETAILS.

3. PRESENTATION CONVENTIONS FOR STRUCTURAL DRAWINGS:

   A. SCREENED LINE WORK INDICATES EXISTING CONDITIONS.
   B. WRITTEN DIMENSIONS TAKE PRECEDENCE OVER SCALED SIZES.
   C. PLANS ARE TREATED AS HORIZONTAL SECTIONS. (I.E.: "PLAN AT ELEVATION 110" SHOWS CONSTRUCTION AT AND BELOW ELEVATION 110.)

4. VERIFY DIMENSIONS AND CONDITIONS BEFORE BEGINNING WORK. ADVISE ENGINEER IMMEDIATELY OF DISCREPANCIES BETWEEN EXISTING CONDITIONS AND DIMENSIONS, AND INFORMATION SHOWN ON THESE DRAWINGS. CONFIRM THE FOLLOWING BEFORE PREPARATION AND SUBMITTAL OF SHOP DRAWINGS:

   A. DIMENSIONS AND WEIGHTS FOR EQUIPMENT SELECTED.
   B. SIZES AND LOCATIONS OF EQUIPMENT PADS FOR EQUIPMENT SELECTED.

5. TYPICAL DETAILS ARE INCLUDED ON THE "TS" DRAWINGS.

   A. TYPICAL DETAILS ARE INTENDED TO APPLY AT LOCATIONS DESCRIBED BY THEIR TITLES, EVEN WHEN NOT SPECIFICALLY REFERENCED ON THE DRAWINGS.
   B. IN STRUCTURAL TYPICAL DETAILS, ORIENTATION OF BARS IN EACH MAT OF REINFORCEMENT (WHETHER "LINES" OR "DOTS"ARE CLOSER TO THE FACE OF THE CONCRETE) IS GENERALLY ARBITRARY. SEE DRAWINGS OF EACH STRUCTURE FOR ORIENTATION REQUIRED AT THAT STRUCTURE.

6. SEE CIVIL DRAWINGS FOR STRUCTURE COORDINATES. POINTS ON THE STRUCTURES TO WHICH SITE COORDINATES REFER ARE SHOWN ON THE STRUCTURAL PLANS.

7. DRAWINGS PREPARED BY OTHER DISCIPLINES INCLUDE OPENINGS, ANCHORS, PIPES, CONDUITS, AND OTHER ITEMS THAT ARE EMBEDDED INTO OR PASS THROUGH STRUCTURES.

   A. CONFIRM SIZE AND LOCATIONS OF OPENINGS, PENETRATIONS AND EMBEDMENT FOR ITEMS AND EQUIPMENT FURNISHED.
   B. IN GENERAL, OPENINGS, EMBEDMENTS, AND PENETRATIONS LESS THAN 12 INCHES IN DIAMETER ARE NOT SHOWN ON THE STRUCTURAL DRAWINGS.
   C. SEE MECHANICAL DRAWINGS FOR DETAILS OF PIPE PENETRATIONS, PIPE SUPPORTS, AND ASSOCIATED STRUCTURAL REQUIREMENTS.
   D. SEE MECHANICAL DRAWINGS FOR EQUIPMENT PADS AND PIPE SUPPORTS.

8. SEE ARCHITECTURAL DRAWINGS FOR LOCATIONS AND SIZES OF DOOR AND WINDOW OPENINGS.

STRUCTURAL DESIGN CRITERIA - GENERAL:

SEE DRAWINGS OF INDIVIDUAL STRUCTURES FOR SPECIFIC DESIGN CRITERIA BASED ON THESE OVERALL CRITERIA FOR THE SITE.

1. BUILDING CODE:

   A. 2015 INTERNATIONAL BUILDING CODE ("IBC 2015") WITH ASCE 7-10.
   B. LOCAL AMENDMENTS:

2. STRUCTURE RISK CATEGORY: III

3. DEAD LOADS: CALCULATED FOR STRUCTURE SELF-WEIGHT.

4. LIVE LOADS: (REDUCTIONS NOT USED)

   A. FLOOR LIVE LOAD: SEE PLANS.
   B. GRATING AND CHECKERED PLATE: 100 PSF (UNO).
   C. ROOF LIVE LOAD: SEE PLANS (20 PSF MINIMUM).
   D. EQUIPMENT LOADS: SEE PLANS.
   E. CONCENTRATED AND IMPACT LOADS: SEE PLANS.

5. FLUID PRESSURE LOADS: 63 PSF/FT (UNO).

6. SNOW LOAD DATA:

   A. GROUND SNOW LOAD, Pg = 5 PSF.
   B. SNOW EXPOSURE FACTOR, Ce = 0.9.
   C. FLAT ROOF SNOW LOAD: 5.5 PSF (MINIMUM).

7. WIND DESIGN DATA:

   A. SPECIAL WIND REGION: NO
   B. WIND-BORNE DEBRIS REGION: NO
   C. BASIC WIND SPEED (3 SEC GUST, 33 FEET ABOVE GROUND): 120 MPH. (ULTIMATE)

8. EARTHQUAKE DESIGN DATA:

		0.2 SECOND	*1.0 SECOND
A.	SITE CLASS: D .		
B.	MAPPED SPECTRAL RESPONSE ACCELERATIONS:	Ss = 0.065 g	S1 = 0.034 g
C.	SITE COEFFICIENTS:	Fa = 1.6	Fv = 2.4
D.	MAXIMUM CONSIDERED ACCELERATIONS:*	Sms =0.104 g	Sm1 = 0.082 g
E.	DESIGN SPECTRAL RESPONSE ACCELERATIONS:* (* 5% DAMPED)	Sds = 0.069 g	Sd1 = 0.055 g

9. FLOOD LOADS:

   A. FLOOD HAZARD AREA: NO

10. CONSTRUCTION LOADS:
    STRUCTURES HAVE BEEN DESIGNED FOR OPERATING LOADS ON COMPLETED FACILITIES. UNTIL CONSTRUCTION IS COMPLETE AND MEMBERS HAVE ACHIEVED THEIR DESIGN STRENGTH, PROTECT STRUCTURES AS REQUIRED BY SHORING, BRACING, AND BALANCING.

GEOTECHNICAL REPORT / FOUNDATION DESIGN CRITERIA:

1. GEOTECHNICAL INVESTIGATION REPORT:
   REPORT GEOTECHNICAL INVESTIGATION - WILD HORSE RANCH WASTEWATER
   TITLE: TREATMENT PLANT EXPANSION
   PREPARED BY:BALCONES GEOTECHNICAL
   REPORT NO: 0119-004 DATED: MARCH 16, 2020

2. FOUNDATION DESIGNS ARE BASED ON RECOMMENDATIONS IN THE GEOTECHNICAL INVESTIGATION REPORT.

   A. NET ALLOWABLE BEARING PRESSURE SEE PLANS.

   B. FROST DEPTH: NA

   C. LATERAL EARTH PRESSURE (UNO):
      SURCHARGE: EQUIVALENT TO 2 FEET OF SOIL ABOVE FINISHED GRADE.

	STATIC (ABOVE THE WATER TABLE)
AT REST (PSF/FT):	70
PASSIVE (PSF/FT):	375
SLIDING COEFFICIENT OF FRICTION:	0.37

SHALLOW FOUNDATION AND SUBGRADE PREPARATION:

1. MAT FOUNDATIONS NET ALLOWABLE BEARING CAPACITY = 3,000 psf

2. SELECT FILL PAD PREPARATION
   A. WITHIN THE STRUCTURE FOOTPRINT AND AT LEAST 5 FT OUTSIDE THE FOOTPRINT, REMOVE AND DISPOSE OF ALL SURFICIAL VEGETATION, PAVEMENTS, DELETERIOUS MATERIALS, AND ANY ADDITIONAL DEPTH REQUIRED TO PROVIDE A SELECT FILL PAD.
   B. SCARIFY THE EXCAVATED, PRE-FILL SUBGRADE AT LEAST 8" AND RECOMPACT TO AT LEAST OF 95% COMPACTION.
   C. BRING THE PAD TO GRADE WITH CRUSHED LIMESTONE DERIVATIVE BASE MATERIAL (select fill).
   D. PLACE A SELECT FILL IN MAXIMUM 8-INCH LOOSE LIFTS AND COMPACT TO 98% COMPACTION.
   E. OUTSIDE OF THE STRUCTURE, THE SELECT FILL PAD SHOULD BE CAPPED, OR COVERED,WITH A SITE-GENERATED CLAY CAP OR WITH IMPERMEABLE CONCRETE FLATWORK, IF CLAY CAP IS USED, PROVIDE A MINIMUM THICKNESS OF 18 INCHES.
   F. REFERENCE TABLE FOR SELECT FILL PAD THICKNESSES IN DIFFERENT AREAS

SELECT FILL PAD THICKNESSES

AREA #	AREA NAME	SELECT FILL PAD THICKNESSES
00	SPLITTER STRUCTURE	4'
30	AERATION BASIN 3 & 4	4'
31	MIXED LIQUOR SPLITTER BOX	10'
40	SECONDARY CLARIFIER 2	5'
40	SECONDARY CLARIFIER 3	5'
40	SCUM STATION 1	4'
40	SCUM STATION 2	4'
45	RAS PUMP STATION AND CANOPY	10'
46	RAS SPLITTER BOX	10'
47	WAS PUMP STATION AND CANOPY	10'
50	FILTERS AND UV DISINFECTION COMPLEX	10'
65	PLANT WATER PUMP STATION	4'
70	SLUDGE HOLDING TANK #1	6'
72	PLANT DRAIN PUMP STATION	3'

TYPICAL STRUCTURAL MATERIALS:

1. MATERIALS SHALL CONFORM TO THE FOLLOWING REQUIREMENTS UNLESS OTHERWISE INDICATED ON THE DRAWINGS.

2. SEE PROJECT SPECIFICATIONS AND NOTES ON DRAWINGS OF SPECIFIC STRUCTURES FOR DETAILED AND LOCATION-SPECIFIC REQUIREMENTS.

REINFORCING STEEL (FOR CONCRETE AND MASONRY):

1. DEFORMED BARS:
   A. TYPICAL: ASTM A 615, GRADE 60.
   B. WHERE INDICATED ON THE DRAWINGS: ASTM A 706.

2. WELDED WIRE FABRIC: ASTM A 1064.

3. PRESTRESSING STRANDS: ASTM A 416, 270 KSI YIELD STRENGTH, 7-WIRE.

4. HORIZ JOINT REINF (FOR MASONRY: ASTM A 951, 3/16"DIA x 2 RODS), GALV.

CONCRETE:

1. NORMAL DENSITY.

2. MINIMUM SPECIFIED CONCRETE COMPRESSIVE STRENGTH, f'c (AT 28 DAYS UNO).

   A. STRUCTURES: "CLASS A"OR "CLASS B" f'c = 4500 PSI.
   B. FILL AND THRUST BLOCKS: "CLASS C" f'c = 2500 PSI.
   C. PIPE ENCASEMENT: "CLASS C" f'c = 2500PSI.
   D. ELECTRICAL DUCT ENCASEMENT: "CLASS CE" f'c = 2500 PSI.
   E. PRECAST AND PRECAST-PRESTRESSED MEMBERS: "CLASS D" f'c = 5000 PSI.

MASONRY:

1. CONCRETE MASONRY

   A. UNITS: ASTM C 90, NORMAL WEIGHT.
   B. MORTAR: ASTM C 270, MINIMUM 28-DAY COMPRESSIVE STRENGTH = 1800 PSI.
   C. GROUT: ASTM C 476. MINIMUM 28-DAY COMPRESSIVE STRENGTH = 2000 PSI.

   D. MINIMUM SPECIFIED COMPRESSIVE STRENGTH, f'm (AT 28 DAYS).
      1) SOLID GROUTED: f'm = 1500 PSI.
      2) PARTIALLY GROUTED: f'm = 1350 PSI.

STRUCTURAL STEEL:

1. SECTIONS

   A. SHAPES W, WT: ASTM A 992 (Fy = 50 KSI)
   B. SHAPES S, ST, M, MT, HP, C, MC, L: ASTM A 36 (Fy = 36 KSI)
   C. PLATES AND BARS: ASTM A 36 (Fy = 36 KSI)
   D. PIPES: ASTM A 53, GRADE B (Fy = 35 KSI)
   E. HOLLOW STRUCTURAL SECTIONS:
      ROUND: ASTM A 500, GRADE B (Fy = 42 KSI)
      SQUARE AND RECTANGULAR: ASTM A 500, GRADE B (Fy = 46 KSI)

2. CONNECTIONS:

   A. BOLTS - STEEL TO-STEEL:
      ASTM F 3125 GRADE A325 HIGH-STRENGTH BOLTS, WITH LOAD INDICATOR WASHERS.
   B. BOLTS - STEEL TO CONCRETE OR MASONRY:
      ANCHOR BOLTS WITH HEX FORGED HEAD.
      ASTM F 593, STAINLESS TYPE 316 (304)
      ASTM F 1554, GRADE 36 GALVANIZED.
   C. WELDS - SHIELDED METAL ARC PROCESS USING E70-XX ELECTRODES.

STAINLESS STEEL:

1. ANSI TYPE 316/316L EXCEPT WHERE TYPE 304/304L IS INDICATED ON THE DRAWINGS.

2. SECTIONS: SHAPES AND BARS: ASTM A 276.

3. BOLTED CONNECTIONS - BOLTS AND ANCHOR BOLTS:

   A. MATCH ALLOY OF THE STRUCTURAL MEMBERS CONNECTED.
   B. TYPE 316/316L: ASTM F 593, GRADE B8M, CLASS 1, HEAVY HEX.
   C. TYPE 304/304L: ASTM F 593, GRADE B8, CLASS 1, HEAVY HEX.

4. WELDED CONNECTIONS:

   A. TYPE 316L: E316L-15 ELECTRODES.
   B. TYPE 304L: E304L-15 ELECTRODES.

STRUCTURAL ALUMINUM:

1. SECTIONS

   A. SHAPES: ASTM B 308, ALLOY 6061-T6.
   B. SHEET AND PLATE: ASTM B 209, ALLOY 6061-T6.

2. BOLTED CONNECTIONS - BOLTS AND ANCHOR BOLTS:

   A. STAINLESS STEEL - TYPE 316, ASTM F 593, GRADE B8M, CLASS 1, HEAVY HEX.

3. WELDED CONNECTIONS:

   A. GAS METAL ARC (MIG) OR GAS TUNGSTEN ARC (TIG) PROCESS USING FILLER ALLOY 4043 ELECTRODES.

CONSTRUCTION:

CONFORM TO THE FOLLOWING REQUIREMENTS UNLESS OTHERWISE INDICATED ON THE DRAWINGS.

EXCAVATION AND BACKFILLING:

1. EXPOSE AND PREPARE SUBGRADE AS SHOWN ON THE DRAWINGS AND SPECIFIED. OBTAIN ENGINEER'S OBSERVATION OF SUBGRADE SURFACES, AS EXPOSED AND AS PREPARED, BEFORE PROCEEDING WITH FOUNDATION CONSTRUCTION.

2. DO NOT PLACE BACKFILL AGAINST WALLS UNTIL STRUCTURES SUPPORTING THE TOP OF THE WALL ARE IN PLACE, ARE COMPLETE, AND (IN THE CASE OF CONCRETE) HAVE CURED TO THEIR MINIMUM SPECIFIED 28-DAY COMPRESSIVE STRENGTH.

3. WHERE BACKFILL MUST BE PLACED AGAINST WALLS BEFORE STRUCTURES ABOVE ARE COMPLETE, PROVIDE BRACING FOR WALLS. KEEP BRACING IN PLACE UNTIL THE STRUCTURE ABOVE IS COMPLETE AND (IN THE CASE OF CONCRETE) HAS CURED TO ITS MINIMUM SPECIFIED 28-DAY COMPRESSIVE STRENGTH.

CONCRETE:

1. SEE S101/TYP FOR CONCRETE NOTES, INCLUDING CLEAR COVER AND LAP SPLICE LENGTH REQUIREMENTS FOR REINFORCING.

2. SUBMIT LOCATIONS OF CONSTRUCTION JOINTS NOT SHOWN ON THE DRAWINGS FOR ACCEPTANCE BY THE ENGINEER BEFORE FORM LAYOUT.

3. PROVIDE CHAMFER AT EXPOSED EDGES OF CAST-IN-PLACE CONCRETE.

4. PROVIDE REINFORCING:

   A. AT CORNERS AND JUNCTIONS - AS INDICATED IN S144/TYP, SUPPLEMENT WITH ADDED BARS WHERE INDICATED ON THE DRAWINGS.
   B. AT OPENINGS - AS INDICATED IN S180/TYP.

5. WELDING OF REINFORCING IS NOT PERMITTED UNLESS DETAILED ON THE DRAWINGS OR ACCEPTED IN ADVANCE BY THE ENGINEER.

6. MAINTAIN MINIMUM 3 INCHES CLEAR CONCRETE COVER BETWEEN REINFORCING AND EMBEDMENTS.

7. FINISH CONCRETE AS SPECIFIED.

8. CONCRETE PADS

   A. (E) EQUIPMENT PAD SEE S302/TYP.

   B. (H) HOUSEKEEPING PAD FOR ELECTRICAL EQUIPMENT SEE S350/TYP.

MASONRY:

1. SEE S400/TYP FOR MASONRY NOTES, INCLUDING LAP SPLICE LENGTHS.

2. PROVIDE REINFORCING:

   A. AT CORNERS AND JUNCTIONS AS INDICATED IN S412/TYP.
   B. AT OPENINGS AS INDICATED IN S410/TYP.

3. WELDING OF REINFORCING IS NOT PERMITTED UNLESS DETAILED ON THE DRAWINGS OR ACCEPTED IN ADVANCE BY THE ENGINEER.

4. GROUTING:

   A. FULLY GROUTED.

STEEL, STAINLESS STEEL, AND ALUMINUM - CONNECTIONS:

1. BOLTED:

   A. MADE USING 3/4-INCH DIAMETER BOLTS.
   B. HAVING A MINIMUM OF 2 BOLTS, SPACED NOT CLOSER THAN 3 INCHES ON CENTER.
   C. WITH A DISTANCE OF AT LEAST 1 1/2 INCHES FROM CENTER OF BOLT TO ANY EDGE OF A PLATE OR STRUCTURAL ELEMENT.

2. WELDED:

   A. FILLET WELDS: PER AWS CODE BASED ON THE THICKNESS OF THE MATERIALS BEING JOINED, AND FULL LENGTH OF THE JOINT.

3. INTERFACE BETWEEN MATERIALS:

   A. AT BOLTED CONNECTIONS THAT INCLUDE DIFFERENT METALS (E.G.: STEEL AND STAINLESS STEEL, OR ALUMINUM AND STAINLESS STEEL) PROVIDE ISOLATING SLEEVES AND WASHERS AS SPECIFIED IN SECTION 05190.
   B. WHERE ALUMINUM IS IN CONTACT WITH MASONRY OR CONCRETE, COAT ALUMINUM SURFACES AS SPECIFIED IN SECTION 09960.

4. POST-INSTALLED ANCHORS IN CONCRETE AND MASONRY:

   A. INSTALL IN FULL COMPLIANCE WITH ACCEPTED BUILDING CODE EVALUATION REPORT AND MANUFACTURER'S INSTRUCTIONS.
   B. DO NOT CUT, DAMAGE, OR INTERRUPT EXISTING REINFORCEMENT TO INSTALL ANCHORS. USE NON-DESTRUCTIVE TESTING EQUIPMENT TO IDENTIFY LOCATIONS OF REINFORCEMENT IN MEMBERS BEFORE DRILLING HOLES FOR ANCHORS.

METAL FABRICATIONS:

1. HANDRAILS AND GUARDRAILS:

   A. ALUMINUM, EXCEPT WHERE OTHER MATERIALS ARE NOTED.

2. GRATING:

   A. ALUMINUM WITH TYPE 316 STAINLESS STEEL FASTENERS, UNLESS OTHERWISE NOTED.
   B. GRATING AND ITS SEATS OR SUPPORTS SHALL BE OF THE SAME MATERIAL.
   C. UNLESS INDICATED ON THE DRAWINGS AS "REMOVABLE GRATING", SECURELY FASTEN GRATING TO SUPPORTS AS INDICATED IN S559/TYP.

3. COVER PLATES:

   A. ALUMINUM WITH TYPE 316 STAINLESS STEEL FASTENERS, UNLESS OTHERWISE NOTED.
   B. COVER PLATE AND ITS SEATS OR SUPPORTS SHALL BE OF THE SAME MATERIAL.

SPECIAL INSPECTION:

1. SPECIAL INSPECTION IS REQUIRED FOR THE FOLLOWING STRUCTURAL MATERIALS AND CONSTRUCTION. SEE SPECIAL INSPECTION TABLE ON DRAWINGS 00GS02 AND 00GS03 SEE SPECIFICATION SECTION 01455 FOR DETAILS.

2. DIVISION 2 SITE CONSTRUCTION (EARTHWORK)

   A. EXCAVATION DEPTH.
   B. ADEQUACY OF EXPOSED SURFACE TO PROVIDE REQUIRED SUPPORT.
   C. PREPARATION OF SOILS/SURFACES SUPPORTING CONSTRUCTION.
   D. FILL AND BACKFILL.
   E. DEEP FOUNDATIONS PILES DRILLED PIERS HELICAL ANCHORS.

3. DIVISION 3 CONCRETE:

   A. LOCATIONS.
   B. FORMWORK AND MEMBER SIZES.
   C. REINFORCING STEEL.
   D. ANCHORS: CAST-IN AND POST-INSTALLED.
   E. CONCRETE MIX AND PLACEMENT.
   F. PROTECTION AND CURING PROCEDURES.

4. DIVISION 4 MASONRY

   A.LOCATIONS.
   B.MEMBER SIZES.
   C.REINFORCING STEEL.
   D.ANCHORS: BUILT-IN AND POST-INSTALLED.
   E.MORTAR AND JOINTS.
   F.GROUT AND GROUTING.
   G.PROTECTION AND CURING PROCEDURES.

THIS CONFORMED DOCUMENT IS RELEASED FOR THE CONVENIENCE OF THE CONTRACTOR UNDER THE AUTHORITY OF:

11-01-22
DATE

DANNY M HURTADO, P.E.
TX LIC NO. 104266

SEE DISCLAIMER FOR LIMITATIONS OF USE.

5. DIVISION 5 METALS

   A. GENERAL ALL METALS:
      1) MEMBER LOCATIONS.
      2) MEMBER SIZES/TYPES.
      3) ANCHORS - CAST-IN AND BUILT-IN ANCHOR BOLTS.
      4) ANCHORS - POST-INSTALLED MECHANICAL AND ADHESIVE.

   B. STRUCTURAL STEEL (CARBON AND STAINLESS).
      1) HIGH-STRENGTH BOLTING.
      2) WELDING.

   C. STRUCTURAL ALUMINUM.
      1) BOLTING.
      2) WELDING.

   D. STEEL JOISTS AND JOIST GIRDERS.
      1) CONNECTIONS.
      2) BRACING.

   E. STEEL DECKING.
      1) CONNECTIONS TO SUPPORTS.
      2) SIDE CONNECTIONS BETWEEN ADJACENT SHEETS.

STRUCTURAL OBSERVATION:

1. STRUCTURAL OBSERVATION IS REQUIRED DURING AND AT SPECIFIC STAGES OF CONSTRUCTION. SEE SPECIFICATION SECTION 01455 FOR DETAILS.

STRUCTURAL SYMBOLS:

1. SEE DRAWING 00G02 FOR KEY TO DRAWING TITLES AND SECTION CUTS, AND FOR DEFINITION OF MATERIALS SHADING PATTERNS.

2. WELDING: SYMBOLS: IN ACCORDANCE WITH AMERICAN WELDING SOCIETY (AWS) A2.4.

STRUCTURAL ABBREVIATIONS:

1. SEE DRAWING 00G04 FOR GENERAL LIST OF ABBREVIATIONS USED ON DRAWINGS.

2. ABBREVIATIONS FOR NAMES OF TECHNICAL GROUPS MAY BE FOUND IN THE PROJECT SPECIFICATIONS.

3. STRUCTURAL MEMBERS:

   A. STEEL: ABBREVIATIONS AND DESIGNATIONS ARE IN ACCORDANCE WITH THE AMERICAN INSTITUTE OF STEEL CONSTRUCTION'S STEEL CONSTRUCTION MANUAL, CURRENT EDITION.

   B. ALUMINUM: ABBREVIATIONS AND DESIGNATIONS ARE IN ACCORDANCE WITH THE ALUMINUM ASSOCIATION'S ALUMINUM DESIGN MANUAL, CURRENT EDITION.

4. ABBREVIATIONS FOR STRUCTURAL DRAWINGS:
   WHEN USED ON THE STRUCTURAL DRAWINGS, THE FOLLOWING ABBREVIATIONS HAVE THE MEANINGS LISTED.

REINFORCEMENT:		OTHER:	
BO	BOTTOM OF	L	ANGLE
EF	EACH FACE	PL	PLATE
I.F.	INSIDE FACE		
O.F.	OUTSIDE FACE		
T.O.	TOP OF		
#	NUMBER (REINFORCING BAR SIZE)		

DEFERRED DESIGN SUBMITTALS

AS DEFINED IN THE BUILDING CODE, DEFERRED DESIGN SUBMITTALS ARE PORTIONS OF THE DESIGN THAT ARE NOT SUBMITTED AT THE TIME OF PERMIT APPLICATION, AND THAT ARE TO BE REVIEWED BY THE REGISTERED DESIGN PROFESSIONAL AND SUBSEQUENTLY SUBMITTED TO THE BUILDING OFFICIAL.

DEFERRED DESIGN SUBMITTALS FOR THIS PROJECT INCLUDE:

1. DIVISION 2 SITE CONSTRUCTION (EARTHWORK).

2. DIVISION 5 METALS.

   A. 05500 HANDRAILS AND GUARDRAILS.
      05500 GRATING
3. DIVISION 13 SPECIAL CONSTRUCTION.

   A. 13122 METAL BUILDING SYSTEM.

4. LIFTING EYES: SUBMIT DETAILS WITH CALCULATIONS DEMONSTRATING THE SPECIFIED LOAD CAPACITY TO ENGINEER. DELIVER REMOVABLE EYES TO OWNER AFTER INSTALLATION OF REMOVABLE PANELS.

CONTRACT DOCUMENTS DATED JUNE 10, 2022, AS PART OF THE BIDDING DOCUMENTS (DRAWINGS AND SPECIFICATIONS) AND SUBSEQUENTLY ISSUED ADDENDA HAVE BEEN MERGED INTO ONE CONFORMING SET OF DOCUMENTS FOR THE CONVENIENCE OF THE CONTRACTOR. IF INCONSISTENCIES OR AMBIGUITIES BETWEEN "CONFORMED" DOCUMENTS AND CONTRACT DOCUMENTS ARE FOUND, THE CONTRACT DOCUMENTS SHALL GOVERN.

REV	DATE	BY	DESCRIPTION
			CONFORMED DOCUMENTS

DESIGNED KMD
DRAWN JKK
CHECKED JDS
DATE NOVEMBER 2022

** ORIGINAL SEALED BY KWASI DUOSE 06-10-22 TX PE 100650 **

carollo®
TBPELS No. F-882

CITY OF AUSTIN
FOUNDED 1839

CITY OF AUSTIN

CITY OF AUSTIN
WILD HORSE RANCH WWTP EXPANSION
STRUCTURAL
GENERAL STRUCTURAL NOTES

VERIFY SCALES
BAR IS ONE INCH ON ORIGINAL DRAWING
0 1"
IF NOT ONE INCH ON THIS SHEET, ADJUST SCALES ACCORDINGLY

JOB NO. 10976A.00
DRAWING NO. 00GS01
SHEET NO. 317 OF 464

TABLE A - CONCRETE SPECIAL INSPECTION SCHEDULE
(Includes: cast-in-place, precast, prestressed, precast-prestressed, and shotcrete.)

Verification and Inspection	Reference Standard ACI 318-14 AWS D1.4-18 IBC 2018	Frequency of Inspection[1] (During Task Listed) Continuous	Periodic
1. Inspect reinforcement, including prestressing tendons, and verify placement.	ACI 318: 20, 25.2, 25.3, 26.6.1-26.6.3 IBC: 1908.4		●
2. Reinforcing bar welding:			
a. Verify weldability of reinforcing bars other than ASTM A706;	AWS D1.4 ACI 318: 26.6.4		●
b. Inspect single-pass fillet welds, maximum 5/16"; and	AWS D1.4 ACI 318: 26.6.4		●
c. Inspect all other welds.	AWS D1.4 ACI 318: 26.6.4	●	
3. Inspect anchors cast in concrete.	ACI 318: 17.8.2		●
4. Inspect anchors post-installed in hardened concrete members.			
a. Adhesive anchors installed in horizontally or upwardly inclined orientations to resist sustained tension loads.	ACI 318: 17.8.2.4	●	
b. Mechanical anchors and adhesive anchors not defined in 4.a.	ACI 318: 17.8.2		●
5. Verify use of required design mix.	ACI 318: 19, 26.4.3, 26.4.4 IBC: 1904.1, 1904.2, 1908.2, 1908.3		●
6. Prior to concrete placement, fabricate specimens for strength tests, perform slump and air content tests, and determine the temperature of the concrete.	ASTM C172 ASTM C31 ACI 318: 26.5, 26.12 IBC: 1908.10	●	
7. Inspect concrete and shotcrete placement for proper application techniques.	ACI 318: 26.5 IBC: 1908.6, 1908.7, 1908.8	●	
8. Verify maintenance of specified curing temperature and techniques.	ACI 318: 26.5.3-26.5.5		●
Verification and Inspection	**Reference Standard ACI 318-14 AWS D1.4-18 IBC 2018**	**Frequency of Inspection[1] (During Task Listed) Continuous**	**Periodic**
	IBC: 1908.9		
9. Inspect prestressed concrete for:			
a. Application of prestressing forces; and	ACI 318: 26.10	●	
b. Grouting of bonded prestressing tendons.	ACI 318: 26.10	●	
10. Inspect erection of precast concrete members.	ACI 318: 26.9		●
11. Verify in-situ concrete strength, prior to stressing of tendons in post-tensioned concrete and prior to removal of shores and forms from beams and structural slabs.	ACI 318: 26.11.2		●
12. Inspect formwork for shape, location and dimensions of the concrete member being formed.	ACI 318: 26.11.1.2.(b)		●

Notes:
(1) The "●" represents a required inspection activity for the project where it occurs.

TABLE B - ARCHITECTURAL, MECHANICAL AND ELECTRICAL COMPONENTS
SPECIAL INSPECTION SCHEDULE

Verification and Inspection	Reference Standard IBC 2015	Frequency of Inspection[1] (During Task Listed) Continuous	Periodic
1. Architectural components:	Not required for SDC A		
2. Plumbing, mechanical, and electrical components:	Not required for SDC A		
3. Fire-resistance elements:			
a. Sprayed fire-resistant coatings:	IBC: 1705.14		●
b. Mastic and intumescent coatings:	IBC: 1705.15		●
c. Fire-resistant penetrations and joint systems:	IBC: 1705.17,		●
4. Smoke control systems;	IBC: 1705.18		●

Notes:
(1) The "●" represents a required inspection activity for the project where it occurs.

TABLE C1 - MECHANICAL SPECIAL INSPECTION SCHEDULE - "LEVEL B"

MINIMUM TESTS

Verification of Slump flow and Visual Stability Index (VSI) as delivered to the project site as determined by ASTM C1611 for self-consolidating grout

Verification of f'_m in accordance with Specification Section 04220 - Concrete Unit Masonry prior to construction.

MINIMUM SPECIAL INSPECTION – LEVEL B			
Verification and Inspection	**Reference Standard ACI 530-13 ACI 530.1-13**	**Frequency of Inspection[1] (During Task Listed) Continuous**	**Periodic**
1. Verify compliance with the approved submittals.	ACI 530.1: Art. 1.5		●
2. As masonry construction begins, verify that the following are in compliance:			
a. Proportions of site-prepared mortar.	ACI 530.1: Art. 2.1, 2.6A		●
b. Placement of masonry units and construction of mortar joints.	ACI 530.1: Art. 3.3B		●
c. Placement of reinforcement, connectors, and anchors.	ACI 530.1: Art. 3.4, 6.1, 6.2.6, 6.2.7		●
d. Reinforcing bar couplers and terminators.		●	
3. Prior to grouting, verify that the following are in compliance:			
a. Placement of masonry units and construction of mortar joints	ACI 530.1: Art.3.3B		●
b. Grout space.	ACI 530.1: Art. 3.2D, 3.2F		●
c. Grade, type, and size of reinforcement and anchor bolts.	ACI 530.1: Art. 2.4, 3.4 ACI 530: Sec. 6.1		●
d. Placement of reinforcement, connectors, and anchors.	ACI 530.1: Art. 3.2E, 3.4 ACI 530: Sec. 6.1		●
e. Proportions of site-prepared grout.	ACI 530.1: Art. 2.6B		●
MINIMUM SPECIAL INSPECTION – LEVEL B			
Verification and Inspection	**Reference Standard ACI 530-13 ACI 530.1-13**	**Frequency of Inspection[1] (During Task Listed) Continuous**	**Periodic**
4. Verify during construction:			
a. Size and location of structural elements:	ACI 530.1: Art. 3.3F		●
b. Type, size, and location of anchors, including details of anchorage of masonry to structural members, frames, or other construction.	ACI 530: Sec. 1.2.1(e), 6.1.4.3, 6.2.1		●
c. Welding of reinforcement.	ACI 530: Sec. 8.1.6.7.2, 9.3.3.4(c),11.3.3.4(b)	●	
d. Preparation, construction, and protection of masonry during cold weather (temperature below 40 degrees F) or hot weather (temperature above 90 degrees F).	ACI 530.1: Art. 1.8C, 1.8D		●
5. Observe preparation of grout specimens, mortar specimens, and/or prisms.	ACI 530.1: Art. 1.4 B.2.a.3, 1.4 B.2.b.3, 1.4 B.2.c.3, 1.4 B.3, 1.4 B.4		●

Notes:
(1) The "●" represents a required inspection activity for the project where it occurs.

TABLE C2 - MASONRY SPECIAL INSPECTION SCHEDULE - "LEVEL C"

MINIMUM TESTS

Verification of Slump flow and Visual Stability Index (VSI) as delivered to the project site as determined by ASTM C1611 for self-consolidating grout.

Verification of proportions of materials in premixed or pre-blended mortar and grout as delivered to the project site.

Verification of f'_m in accordance with Specification Section 04220 - Concrete Unit Masonry prior to construction.

MINIMUM SPECIAL INSPECTION – LEVEL C			
Verification and Inspection	**Reference Standard ACI 530-13 ACI 530.1-13**	**Frequency of Inspection[1] (During Task Listed) Continuous**	**Periodic**
1. Verify compliance with the approved submittals.	ACI 530.1: Art. 1.5		●
2. As masonry construction begins, verify that the following are in compliance:			
a. Proportions of site-prepared mortar.	ACI 530.1: Art. 2.1, 2.6A		●
b. Placement of masonry units and construction of mortar joints.	ACI 530.1: Art. 3.3B		●
c. Placement of reinforcement, connectors, and anchors.	ACI 530.1: Art 3.4 ACI 530: Sec 6.1, 6.2.6, 6.2.7	●	
d. Reinforcing bar couplers and terminators.		●	
3. Prior to grouting, verify that the following are in compliance:			
a. Placement of masonry units and construction of mortar joints.	ACI 530.1: Art. 3.3B		●
b. Grout space.	ACI 530.1: Art. 3.2D, 3.2F	●	
c. Grade, type, and size of reinforcement and anchor bolts.	ACI 530.1: Art. 2.4, 3.4 ACI 530: Sec. 6.1		●
d. Placement of reinforcement, connectors, and anchors.	ACI 530.1: Art. 3.2E, 3.4 ACI 530: Sec. 6.1, 6.2.6, 6.2.7	●	
MINIMUM SPECIAL INSPECTION – LEVEL C			
Verification and Inspection	**Reference Standard ACI 530-13 ACI 530.1-13**	**Frequency of Inspection[1] (During Task Listed) Continuous**	**Periodic**
4. Verify during construction:			
a. Size and location of structural elements:	ACI 530.1: Art. 3.3F		●
b. Type, size, and location of anchors, including details of anchorage of masonry to structural members, frames, or other construction.	ACI 530: Sec. 1.2.1(e), 6.1.4.3, 6.2.1	●	
c. Welding of reinforcement.	ACI 530: Sec 8.1.6.7.2, 9.3.3.4(c), 11.3.3.4(b)	●	
d. Preparation, construction, and protection of masonry during cold weather (temperature below 40 degrees F) or hot weather (temperature above 90 degrees F).	ACI 530.1: Art. 1.8C, 1.8D		●
5. Observe preparation of grout specimens, mortar specimens, and/or prisms.	ACI 530.1: Art. 1.4 B.2.a.3, 1.4 B.2.b.3, 1.4 B.2.c.3, 1.4 B.3, 1.4 B.4	●	

Notes:
(1) The "●" represents a required inspection activity for the project where it occurs.

THIS CONFORMED DOCUMENT IS RELEASED FOR THE CONVENIENCE OF THE CONTRACTOR UNDER THE AUTHORITY OF:

DANNY M HURTADO, P.E.
TX LIC NO. 104266

11-01-22
DATE

SEE DISCLAIMER FOR LIMITATIONS OF USE.

CONTRACT DOCUMENTS DATED JUNE 10, 2022, AS PART OF THE BIDDING DOCUMENTS (DRAWINGS AND SPECIFICATIONS) AND SUBSEQUENTLY ISSUED ADDENDA HAVE BEEN MERGED INTO ONE CONFORMING SET OF DOCUMENTS FOR THE CONVENIENCE OF THE CONTRACTOR. IF INCONSISTENCIES OR AMBIGUITIES BETWEEN "CONFORMED" DOCUMENTS AND CONTRACT DOCUMENTS ARE FOUND, THE CONTRACT DOCUMENTS SHALL GOVERN.

REV	DATE	BY	DESCRIPTION
			CONFORMED DOCUMENTS

DESIGNED KMD
DRAWN JKK
CHECKED JDS
DATE NOVEMBER 2022

** ORIGINAL SEALED BY KWASI DUOSE 06-10-22 TX PE 100650 **

carollo®
TBPELS No. F-882

CITY OF AUSTIN
FOUNDED 1839
CITY OF AUSTIN

CITY OF AUSTIN
WILD HORSE RANCH WWTP EXPANSION
STRUCTURAL
SPECIAL INSPECTION NOTES 1

VERIFY SCALES
BAR IS ONE INCH ON ORIGINAL DRAWING
0 1"
IF NOT ONE INCH ON THIS SHEET, ADJUST SCALES ACCORDINGLY

JOB NO. 10976A.00
DRAWING NO. 00GS02
SHEET NO. 318 OF 464

PROJECT NO. 10976A10 FILE NAME: 10976A1000GS02.dgn

Plot Date: 10-OCT-2022 12:03:09 PM
User: LDietzel
PlotScale: 1:1
DesignScript: Carollo_Std_Pen_v0905.pen
ColorTable: gshade.ctb
Model: Layout1
LAST SAVED BY: denriquez

TABLE D - SOILS VERIFICATION ND INSPECTION SCHEDULE

Verification and Inspection	Reference Standard IBC 2015	Frequency of Inspection(1) (During Task Listed) Continuous	Periodic
1. Verify materials below shallow foundations are adequate to achieve the design bearing capacity.	IBC: T-1705.6		●
2. Verify excavations are extended to proper depth and have reached proper material.	IBC: T-1705.6		●
3. Perform classification and testing of fill and backfill materials.	IBC: T-1705.6		●
4. Verify use of proper materials, densities, and lift thicknesses during placement and compaction of fill and backfill.	IBC: T-1705.6	●	
5. Prior to placement of fill, observe subgrade and verify that site has been prepared properly.	IBC: T-1705.6		●

Notes:
(1) The "●" represents a required inspection activity for the project where it occurs.

TABLE E - STRUCTURAL STEEL SPECIAL INSPECTION SCHEDULE

Verification and Inspection	Referenced Standard AISC 360-10	Frequency of Inspection(1) (During Task Listed) Continuous	Periodic
Inspection Tasks Prior to Welding	AISC 360, Table N5.4-1		
1. Welding procedure specifications (WPSs) available.		●	
2. Manufacturer certifications for welding consumables available.		●	
3. Material identification (type/grade).			●
4. Welder identification system.			●
5. Fit-up groove welds (including joint geometry): • Joint preparation. • Dimensions (alignment, root opening, root face, bevel). • Cleanliness (condition of steel surfaces). • Tacking (tack weld quality and location). • Backing type and fit (if applicable).			●
5. Configuration and finish of access holes.			●
6. Fit-up of fillet welds: • Dimensions (alignment, gaps at root). • Cleanliness (condition of steel surfaces). • Tacking (tack weld quality and location).			●
7. Check welding equipment.			●
Inspection Tasks During Welding	AISC 360, Table N5.4-2		
8. Use of qualified welders.			●
9. Control and handling of welding consumables: • Packaging. • Exposure control.			●
10. No welding over cracked tack welds.			●
11. Environmental conditions: • Wind speed within limits. • Precipitation and temperature.			●

Verification and Inspection	Referenced Standard AISC 360-10	Frequency of Inspection(1) (During Task Listed) Continuous	Periodic
12. WPS followed: • Settings on welding equipment. • Travel speed. • Selected welding materials. • Shielding gas type/flow rate. • Preheat applied. • Interpass temperature maintained (min/max). • Proper position (F, V, H, OH).			●
13. Welding techniques: • Interpass and final cleaning. • Each pass within profile limitations. • Each pass meets quality requirements.			●
Inspection Tasks After Welding	AISC 360, Table N5.4-3		
14. Welds cleaned.			●
15. Size, length, and location of welds.		●	
16. Welds meet visual acceptance criteria: • Crack prohibition. • Weld/base-metal fusion. • Crater cross section. • Weld profiles. • Weld size. • Undercut. • Porosity.		●	
17. Arc strikes.		●	
18. k-area.		●	
19. Backing removed and weld tabs removed (if required).		●	
20. Repair activities.		●	
21. Document acceptance or rejection of welded joint or member.		●	

Notes:
(1) The "●" represents a required inspection activity for the project where it occurs.

TABLE F - STRUCTURAL STEEL BOLTING SPECIAL INSPECTION SCHEDULE

Verification and Inspection	Referenced Standard ASIC 360-10	Frequency of Inspection(1) (During Task Listed) Continuous	Periodic
Inspection Tasks Prior to Bolting	AISC 360, Table N5.6-1		
1. Manufacturer's certifications available for fastener materials.		●	
2. Fasteners marked in accordance with ASTM requirements.			●
3. Proper fasteners selected for the joint detail (grade, type, bolt length if threads are to be excluded from shear plane).			●
4. Proper bolting procedure selected for joint detail.			●
5. Connecting elements, including the appropriate faying surface condition and hole preparation, if specified, meet applicable requirements.			●
6. Pre-installation verification testing by installation personnel observed and documented for fastener assemblies and methods used.			●
7. Proper storage provided for bolts, nuts, washers and other fastener components.			●
Inspection Tasks During Bolting	AISC 360, Table N5.6-2		
8. Fastener assemblies, of suitable condition, placed in all holes and washers (if required) are positioned as required.			●
9. Joint brought to the snug-tight condition prior to the pretensioning operation.			●
10. Fastener component not turned by the wrench prevented from rotating.			●
11. Fasteners are pretensioned in accordance with the RCSC Specification, progressing systematically from the most rigid point toward the free edges.			●
Inspection Tasks After Bolting	AISC 360, Table N5.6-3		
12. Document acceptance or rejection of bolted connections.		●	

Notes:
(1) The "●" represents a required inspection activity for the project where it occurs.

TABLE G - STRUCTURAL CONSTRUCTION - STEEL DECK; OPEN WEB STEEL JOISTS AND JOIST GIRDERS; AND COLD-FORMED STEEL TRUSSES
SPECIAL INSPECTION SCHEDULE

Verification and Inspection	Referenced Standard IBC 2015	Frequency of Inspection(1) (During Task Listed) Continuous	Periodic
1. Cold-formed steel deck:			
a. Materials: Identification markings conform to ASTM standards specified in the approved construction documents.	Applicable ASTM material standards		●
b. Materials: Manufacturer's certified test reports.			●
c. Welding: Floor and roof deck welds.	AWS D1.3		●
2. Open web steel joints and joist girders:			
a. End connections – welded or bolted	SJI specs		●
b. Bridging – horizontal or diagonal	SJI specs		●
3. Cold-formed steel:			
a. Trusses: Inspect temporary and permanent installation restraints/bracing conform to approved truss submittal.	IBC 1705.2.4		●

Notes:
(1) The "●" represents a required inspection activity for the project where it occurs.

TABLE H - DEEP FOUNDATIONS, CAST-IN-PLACE - SPECIAL INSPECTION

Verification and Inspection	Reference Standard IBC 2015	Frequency of Inspection(1) (During task listed) Continuous	Periodic
1. Observe drilling operations and maintain complete and accurate records for each element.	IBC 1705.8	●	
2. Verify placement locations and plumbness, confirm element diameters, bell diameters (if applicable), lengths, embedment into bedrock or specified stratum (if applicable), and adequate end-bearing strata capacity. Record concrete or grout volumes.	IBC 1705.8	●	
3. For concrete or grout installations, perform additional special inspection in accordance with Appendix A – Concrete Special Inspection.	IBC 1705.8	-	-

Notes:
(1) The "●" represents a required inspection activity for the project where it occurs.

TABLE J - DEEP FOUNDATIONS, DRIVEN - SPECIAL INSPECTION SCHEDULE

Verification and Inspection	Reference Standard IBC 2015	Frequency of Inspection(1) (During task listed) Continuous	Periodic
1. Verify that element materials, sizes, and lengths comply with approved contract documents and approved shop drawings.	IBC 1705.7	●	
2. Determine capacities of test elements and conduct additional load tests, as required	IBC 1705.7		
3. Inspect driving operations and maintain complete and accurate records for each element.	IBC 1705.7	●	
4. Verify placement location and plumbness, confirm type and size of hammer, record number of blows per foot of penetration, determine required penetrations to achieve required/design capacity, record tip and butt elevations, and document any damage to foundation element.	IBC 1705.7	●	
5. Steel elements: perform additional special inspection as specified for structural steel.	IBC 1705.7	-	-
6. Concrete and concrete-filled elements: perform tests and additional special inspections as specified for concrete.	IBC 1705.7	-	-
7. Specialty elements: perform additional inspections as indicated on the approved shop drawings.	IBC 1705.7	-	-

Notes:
(1) The "●" represents a required inspection activity for the project where it occurs.

THIS CONFORMED DOCUMENT IS RELEASED FOR THE CONVENIENCE OF THE CONTRACTOR UNDER THE AUTHORITY OF:

DANNY M HURTADO, P.E.
TX LIC NO. 104266

11-01-22
DATE

SEE DISCLAIMER FOR LIMITATIONS OF USE.

CONTRACT DOCUMENTS DATED JUNE 10, 2022, AS PART OF THE BIDDING DOCUMENTS (DRAWINGS AND SPECIFICATIONS) AND SUBSEQUENTLY ISSUED ADDENDA HAVE BEEN MERGED INTO ONE CONFORMING SET OF DOCUMENTS FOR THE CONVENIENCE OF THE CONTRACTOR. IF INCONSISTENCIES OR AMBIGUITIES BETWEEN "CONFORMED" DOCUMENTS AND CONTRACT DOCUMENTS ARE FOUND, THE CONTRACT DOCUMENTS SHALL GOVERN.

REV	DATE	BY	DESCRIPTION
			CONFORMED DOCUMENTS

DESIGNED KMD
DRAWN JKK
CHECKED JDS
DATE NOVEMBER 2022

** ORIGINAL SEALED BY KWASI DUOSE 06-10-22 TX PE 100650 **

carollo®
TBPELS No. F-882

CITY OF AUSTIN

CITY OF AUSTIN
WILD HORSE RANCH WWTP EXPANSION
STRUCTURAL
SPECIAL INSPECTION NOTES 2

VERIFY SCALES
BAR IS ONE INCH ON ORIGINAL DRAWING
0 1"
IF NOT ONE INCH ON THIS SHEET, ADJUST SCALES ACCORDINGLY

JOB NO. 10976A.00
DRAWING NO. 00GS03
SHEET NO. 319 OF 464

PROJECT NO. 10976A10 FILE NAME: 10976A1000GS03.dgn

Plot Date: 10-OCT-2022 12:06:12 PM
User: LDietzel
PlotScale: 1:1
DesignScript: Carollo_Std_Pen_v0905.pen
ColorTable: gshade.ctb
Model: Layout1
LAST SAVED BY: denriquez

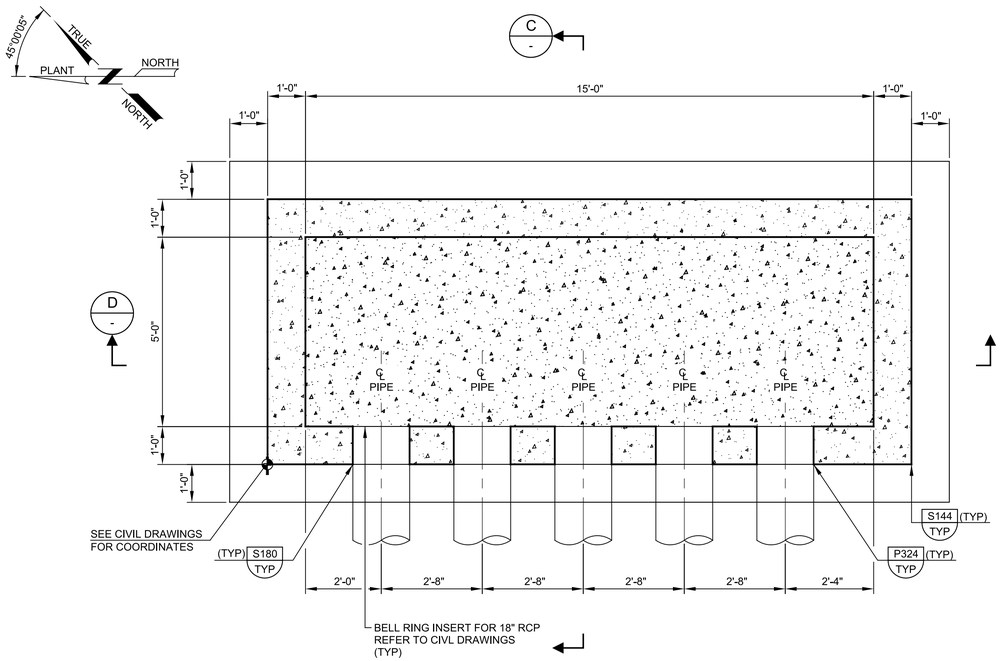

A LOWER PLAN

SCALE: 1/2" = 1'-0"
FILE: 10976A1000S101

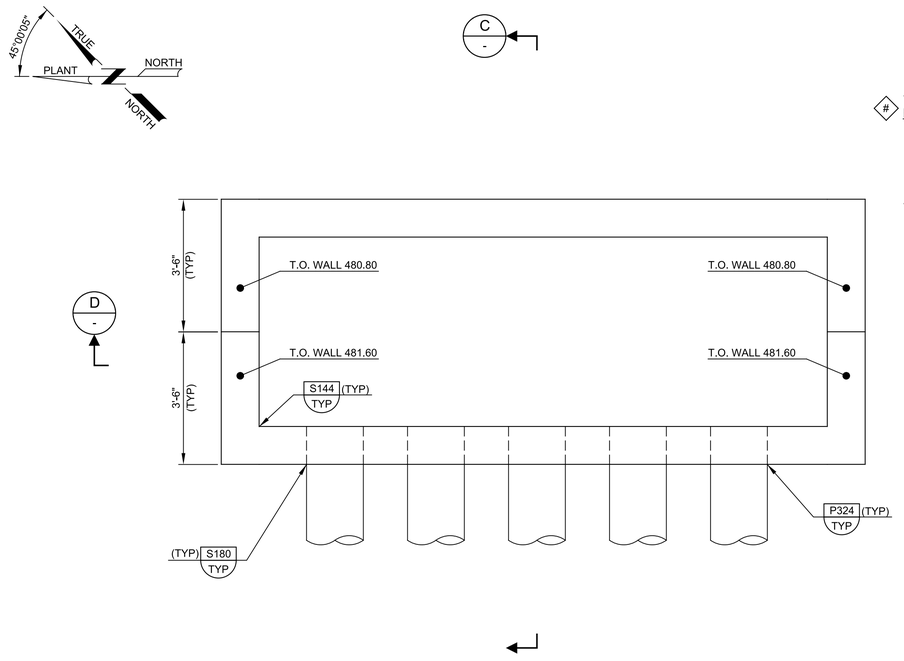

B UPPER PLAN

SCALE: 1/2" = 1'-0"
FILE: 10976A1000S102

GENERAL NOTES:

1. FOR GENERAL STRUCTURAL NOTES SEE DRAWING 00GS01.
2. REFER TO DRAWING 00C02 FOR LOCATION OF STORMWATER SPLITTER STRUCTURE.
3. FOR ALL OPENINGS IN CONCRETE SLABS OR WALLS SEE S180/TYP.
4. VERIFY COORDINATES WITH CIVIL DRAWINGS.

KEY NOTES:

1. FOR FOUNDATION AND SUBGRADE PREPARATION SEE GENERAL STRUCTURAL NOTES DRAWING 00GS01.
2. REMOVE AND REPLACE EXISTING SOIL WITH SELECT FILL FOR A MINIMUM OF 5'-0" OUTSIDE THE STRUCTURE FOOTPRINT.

THIS CONFORMED DOCUMENT IS RELEASED FOR THE CONVENIENCE OF THE CONTRACTOR UNDER THE AUTHORITY OF:

11-01-22
DANNY M HURTADO, P.E. DATE
TX LIC NO. 104266

SEE DISCLAIMER FOR LIMITATIONS OF USE.

CONTRACT DOCUMENTS DATED JUNE 10, 2022, AS PART OF THE BIDDING DOCUMENTS (DRAWINGS AND SPECIFICATIONS) AND SUBSEQUENTLY ISSUED ADDENDA HAVE BEEN MERGED INTO ONE CONFORMING SET OF DOCUMENTS FOR THE CONVENIENCE OF THE CONTRACTOR. IF INCONSISTENCIES OR AMBIGUITIES BETWEEN "CONFORMED" DOCUMENTS AND CONTRACT DOCUMENTS ARE FOUND, THE CONTRACT DOCUMENTS SHALL GOVERN.

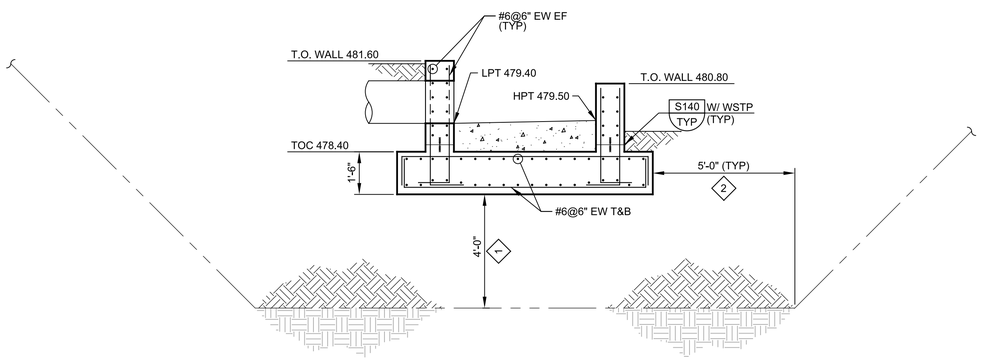

C SECTION

SCALE: 3/8" = 1'-0"
FILE: 10976A1000S301

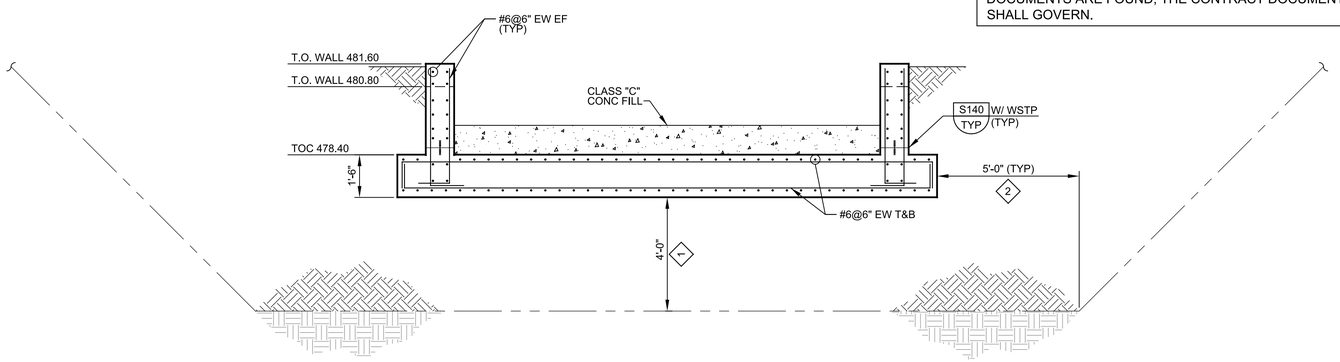

D SECTION

SCALE: 3/8" = 1'-0"
FILE: 10976A1000S302

REV	DATE	BY	DESCRIPTION
			CONFORMED DOCUMENTS

DESIGNED KMD
DRAWN JLH
CHECKED JDS
DATE NOVEMBER 2022

** ORIGINAL SEALED BY KWASI DUOSE 06-10-22 TX PE 100650 **

carollo®
TBPELS No. F-882

CITY OF AUSTIN
FOUNDED 1839
CITY OF AUSTIN

CITY OF AUSTIN
WILD HORSE RANCH WWTP EXPANSION
STRUCTURE
SPLITTER STRUCTURE
LOWER/UPPER PLANS AND SECTIONS

VERIFY SCALES
BAR IS ONE INCH ON ORIGINAL DRAWING
0 1"
IF NOT ONE INCH ON THIS SHEET, ADJUST SCALES ACCORDINGLY

JOB NO. 10976A.00
DRAWING NO. 00S01
SHEET NO. 320 OF 464

PROJECT NO. 10976A10 FILE NAME: 10976A1000S001.dgn

Plot Date: 10-OCT-2022 12:08:54 PM
User: LDietzel
PlotScale: 1:1
DesignScript: Carollo_Std_Pen_v0905.pen
ColorTable: gshade.ctb
Model: Layout1
LAST SAVED BY: jhill

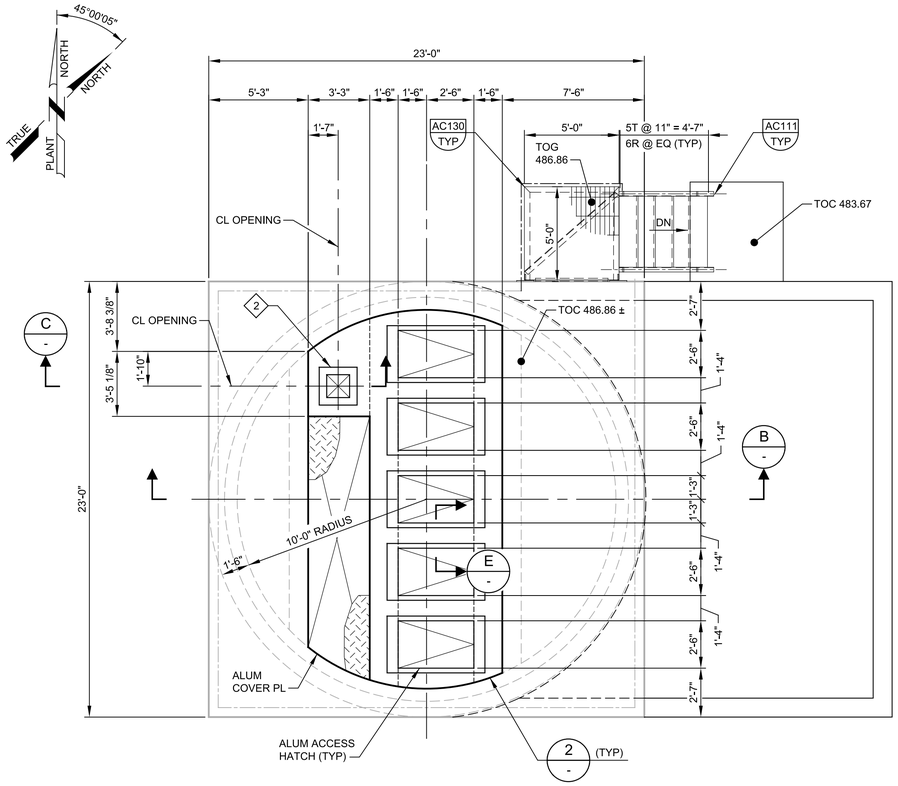

A UPPER PLAN

SCALE: 1/4" = 1'-0"
FILE: 10976A1010S101

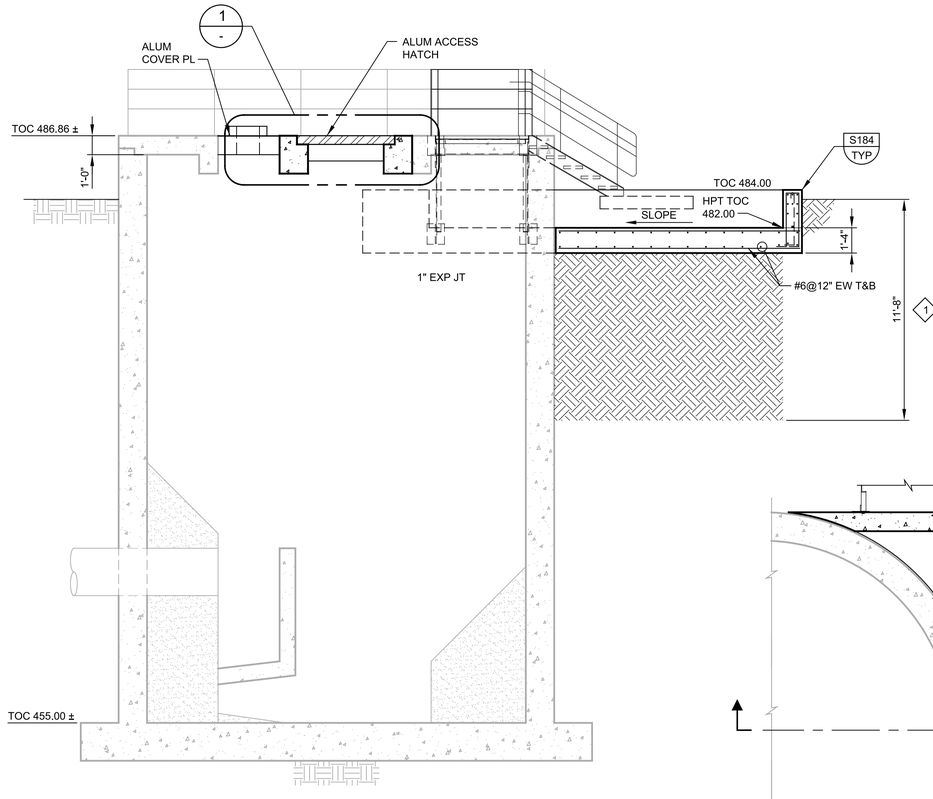

B SECTION

SCALE: 1/4" = 1'-0"
FILE: 10976A1010S301

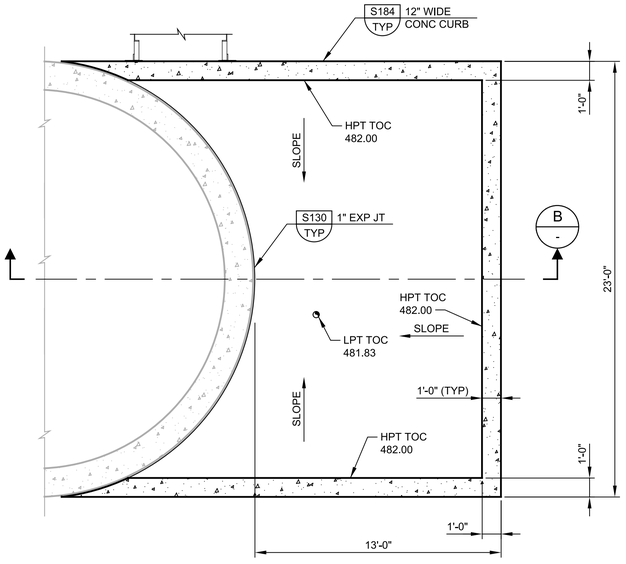

D INTERMEDIATE PLAN

SCALE: 1/4" = 1'-0"
FILE: 10976A1010S102

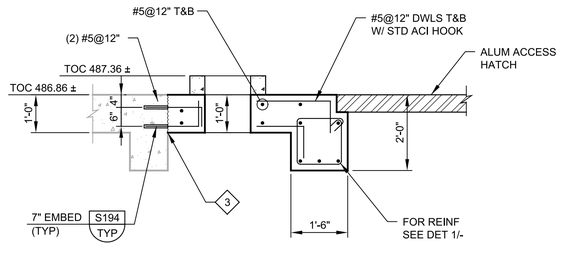

C SECTION

SCALE: 1/2" = 1'-0"
FILE: 10976A1010S401

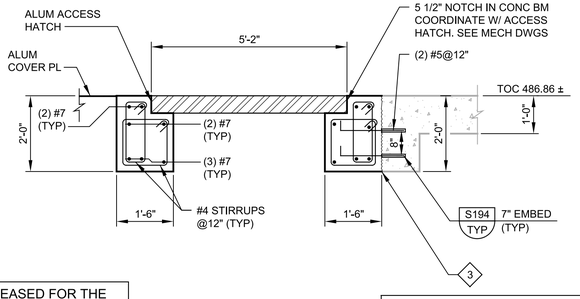

1 DETAIL

SCALE: 1/2" = 1'-0"
FILE: 10976A1010S301

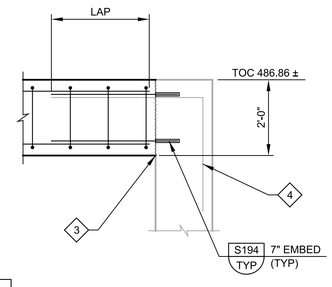

2 DETAIL

SCALE: 1/2" = 1'-0"
FILE: 10976A1010S401

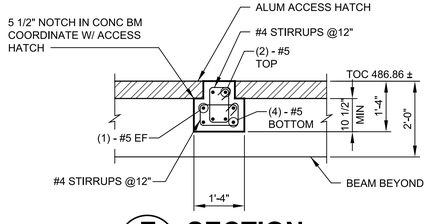

E SECTION

SCALE: 1/2" = 1'-0"
FILE: 10976A1010S302

THIS CONFORMED DOCUMENT IS RELEASED FOR THE CONVENIENCE OF THE CONTRACTOR UNDER THE AUTHORITY OF:

11-01-22
DANNY M HURTADO, P.E. DATE
TX LIC NO. 104266

SEE DISCLAIMER FOR LIMITATIONS OF USE.

CONTRACT DOCUMENTS DATED JUNE 10, 2022, AS PART OF THE BIDDING DOCUMENTS (DRAWINGS AND SPECIFICATIONS) AND SUBSEQUENTLY ISSUED ADDENDA HAVE BEEN MERGED INTO ONE CONFORMING SET OF DOCUMENTS FOR THE CONVENIENCE OF THE CONTRACTOR. IF INCONSISTENCIES OR AMBIGUITIES BETWEEN "CONFORMED" DOCUMENTS AND CONTRACT DOCUMENTS ARE FOUND, THE CONTRACT DOCUMENTS SHALL GOVERN.

GENERAL NOTES:

1. FOR GENERAL STRUCTURAL NOTES SEE DRAWING 00GS01.
2. LIVE LOAD = 100 PSF.

KEY NOTES:

1. FOR FOUNDATION AND SUBGRADE PREPARATION, SEE GENERAL STRUCTURAL NOTES DRAWING 00GS01.
2. 1'-2 1/2" SQ OPENING IN NEW ROOF CONCRETE SLAB W/ 2'-0" SQ ROOF CURB FOR SUPPLY FAN. SEE MECHANICAL DRAWING FOR ADDITIONAL INFORMATION.
3. ROUGHEN JOINT TO 1/4" AMPLITUDE AND COAT WITH EPOXY CEMENT BONDING AGENT.
4. EXISTING REINFORCEMENT LAP SPLICE WITH NEW BEAM REINFORCEMENT.

REV	DATE	BY	DESCRIPTION
			CONFORMED DOCUMENTS

DESIGNED AAC
DRAWN TJD
CHECKED JDS
DATE NOVEMBER 2022

** ORIGINAL SEALED BY KWASI DUOSE 06-10-22 TX PE 100650 **

carollo®
TBPELS No. F-882

CITY OF AUSTIN
FOUNDED 1839

CITY OF AUSTIN

CITY OF AUSTIN
WILD HORSE RANCH WWTP EXPANSION
STRUCTURAL
INFLUENT LIFT STATION
FOUNDATION PLAN, SECTION AND DETAILS

VERIFY SCALES
BAR IS ONE INCH ON ORIGINAL DRAWING
0 1"
IF NOT ONE INCH ON THIS SHEET, ADJUST SCALES ACCORDINGLY

JOB NO. 10976A.00
DRAWING NO. 10S01
SHEET NO. 321 OF 464

PROJECT NO. 10976A10 FILE NAME: 10976A1010S001.dgn

Plot Date: 10-OCT-2022 12:12:13 PM
User: LDietzel
DesignScript: Carollo_Std_Pen_v0905.pen
ColorTable: gshade.ctb
Model: Layout1
PlotScale: 1:1
LAST SAVED BY: denriquez

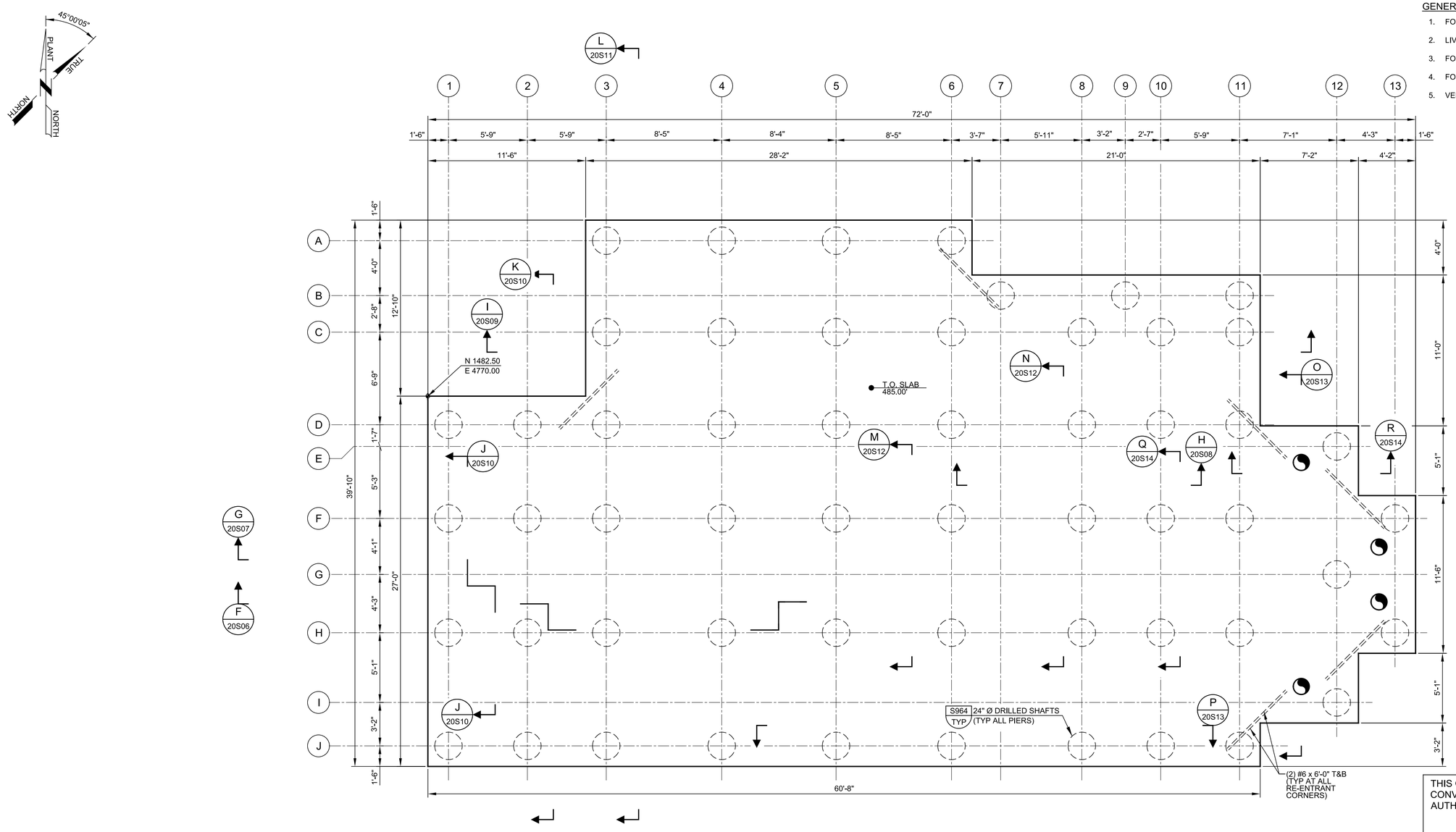

GENERAL NOTES:

1. FOR GENERAL STRUCTURAL NOTES SEE DWG 00GS01.
2. LIVE LOAD = 100 PSF.
3. FOR COATINGS SEE SPECIFICATION SECTION 09960.
4. FOR ALL OPENINGS IN CONCRETE SLABS OR WALLS SEE S180/TYP.
5. VERIFY COORDINATES WITH CIVIL DRAWINGS.

A PIER LAYOUT PLAN

SCALE: 1/4" = 1'-0"
FILE: 10976A1020S100

THIS CONFORMED DOCUMENT IS RELEASED FOR THE CONVENIENCE OF THE CONTRACTOR UNDER THE AUTHORITY OF:

DANNY M HURTADO, P.E.
TX LIC NO. 104266

11-01-22
DATE

SEE DISCLAIMER FOR LIMITATIONS OF USE.

CONTRACT DOCUMENTS DATED JUNE 10, 2022, AS PART OF THE BIDDING DOCUMENTS (DRAWINGS AND SPECIFICATIONS) AND SUBSEQUENTLY ISSUED ADDENDA HAVE BEEN MERGED INTO ONE CONFORMING SET OF DOCUMENTS FOR THE CONVENIENCE OF THE CONTRACTOR. IF INCONSISTENCIES OR AMBIGUITIES BETWEEN "CONFORMED" DOCUMENTS AND CONTRACT DOCUMENTS ARE FOUND, THE CONTRACT DOCUMENTS SHALL GOVERN.

REV	DATE	BY	DESCRIPTION
			CONFORMED DOCUMENTS

DESIGNED KMD
DRAWN JLH
CHECKED JDS
DATE NOVEMBER 2022

** ORIGINAL SEALED BY KWASI DUOSE 06-10-22 TX PE 100650 **

carollo
TBPELS No. F-882

CITY OF AUSTIN

CITY OF AUSTIN
WILD HORSE RANCH WWTP EXPANSION
STRUCTURAL
HEADWORKS
PIER LAYOUT PLAN

VERIFY SCALES
BAR IS ONE INCH ON ORIGINAL DRAWING
0 1"
IF NOT ONE INCH ON THIS SHEET, ADJUST SCALES ACCORDINGLY

JOB NO. 10976A.00
DRAWING NO. 20S01
SHEET NO. 322 OF 464

PROJECT NO. 10976A10 FILE NAME: 10976A1020S001.dgn

Plot Date: 10-OCT-2022 12:14:04 PM
User: LDietzel
PlotScale: 1:1
DesignScript: Carollo_Std_Pen_v0905.pen
ColorTable: gshade.ctb
Model: Layout1
LAST SAVED BY: denriquez

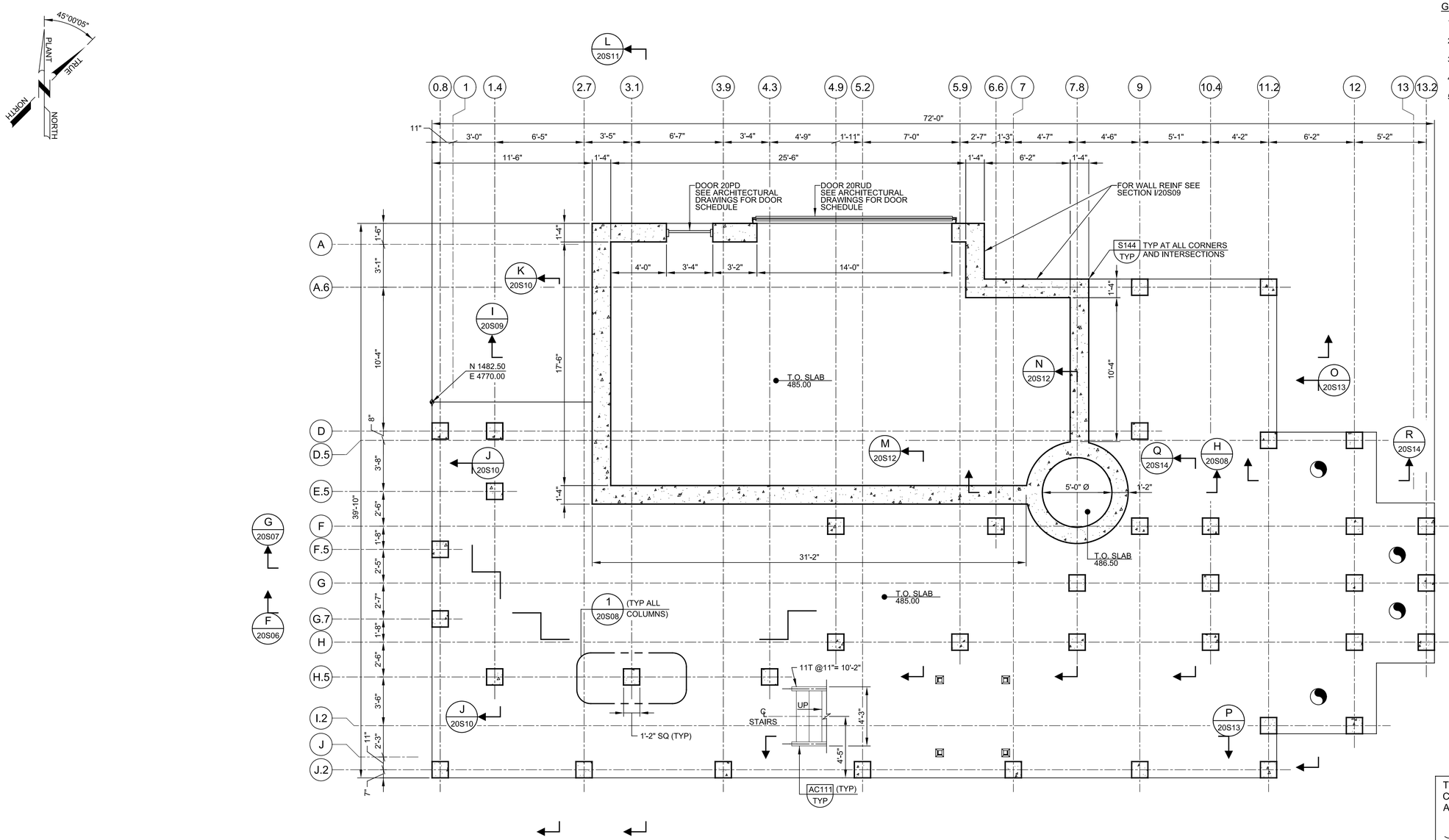

B COLUMN LAYOUT PLAN - EL. 485.00'

SCALE: 1/4" = 1'-0"
FILE: 10976A1020S101

THIS CONFORMED DOCUMENT IS RELEASED FOR THE CONVENIENCE OF THE CONTRACTOR UNDER THE AUTHORITY OF:

DANNY M HURTADO, P.E.
TX LIC NO. 104266

11-01-22
DATE

SEE DISCLAIMER FOR LIMITATIONS OF USE.

CONTRACT DOCUMENTS DATED JUNE 10, 2022, AS PART OF THE BIDDING DOCUMENTS (DRAWINGS AND SPECIFICATIONS) AND SUBSEQUENTLY ISSUED ADDENDA HAVE BEEN MERGED INTO ONE CONFORMING SET OF DOCUMENTS FOR THE CONVENIENCE OF THE CONTRACTOR. IF INCONSISTENCIES OR AMBIGUITIES BETWEEN "CONFORMED" DOCUMENTS AND CONTRACT DOCUMENTS ARE FOUND, THE CONTRACT DOCUMENTS SHALL GOVERN.

REV	DATE	BY	DESCRIPTION
			CONFORMED DOCUMENTS

DESIGNED KMD
DRAWN JLH
CHECKED JDS
DATE NOVEMBER 2022

** ORIGINAL SEALED BY KWASI DUOSE 06-10-22 TX PE 100650 **

carollo® TBPELS No. F-882

CITY OF AUSTIN

CITY OF AUSTIN
WILD HORSE RANCH WWTP EXPANSION
STRUCTURAL
HEADWORKS
COLUMN LAYOUT PLAN - EL. 485.00'

VERIFY SCALES
BAR IS ONE INCH ON ORIGINAL DRAWING
0 1"
IF NOT ONE INCH ON THIS SHEET, ADJUST SCALES ACCORDINGLY

JOB NO. 10976A.00
DRAWING NO. 20S02
SHEET NO. 323 OF 464

PROJECT NO. 10976A10 FILE NAME: 10976A1020S002.dgn

LAST SAVED BY: dentiquez Model: Layout1 ColorTable: gshade.ctb DesignScript: Carollo_Std_Pen_v0905.pen PlotScale: 1:1 Plot Date: 10-OCT-2022 12:15:37 PM User: LDietzel

Plot Date: 10-OCT-2022 12:17:51 PM
User: LDietzel
PlotScale: 1:1
DesignScript: Carollo_Std_Pen_v0905.pen
ColorTable: gshade.ctb
Model: Layout1
LAST SAVED BY: denriquez

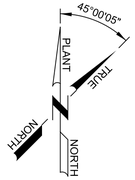

GENERAL NOTES:

1. FOR GENERAL STRUCTURAL NOTES SEE DWG 00GS01.
2. LIVE LOAD = 100 PSF.
3. FOR COATINGS SEE SPECIFICATION SECTION 09960.
4. FOR ALL OPENINGS IN CONCRETE SLABS OR WALLS SEE S180/TYP.
5. VERIFY COORDINATES WITH CIVIL DRAWINGS.

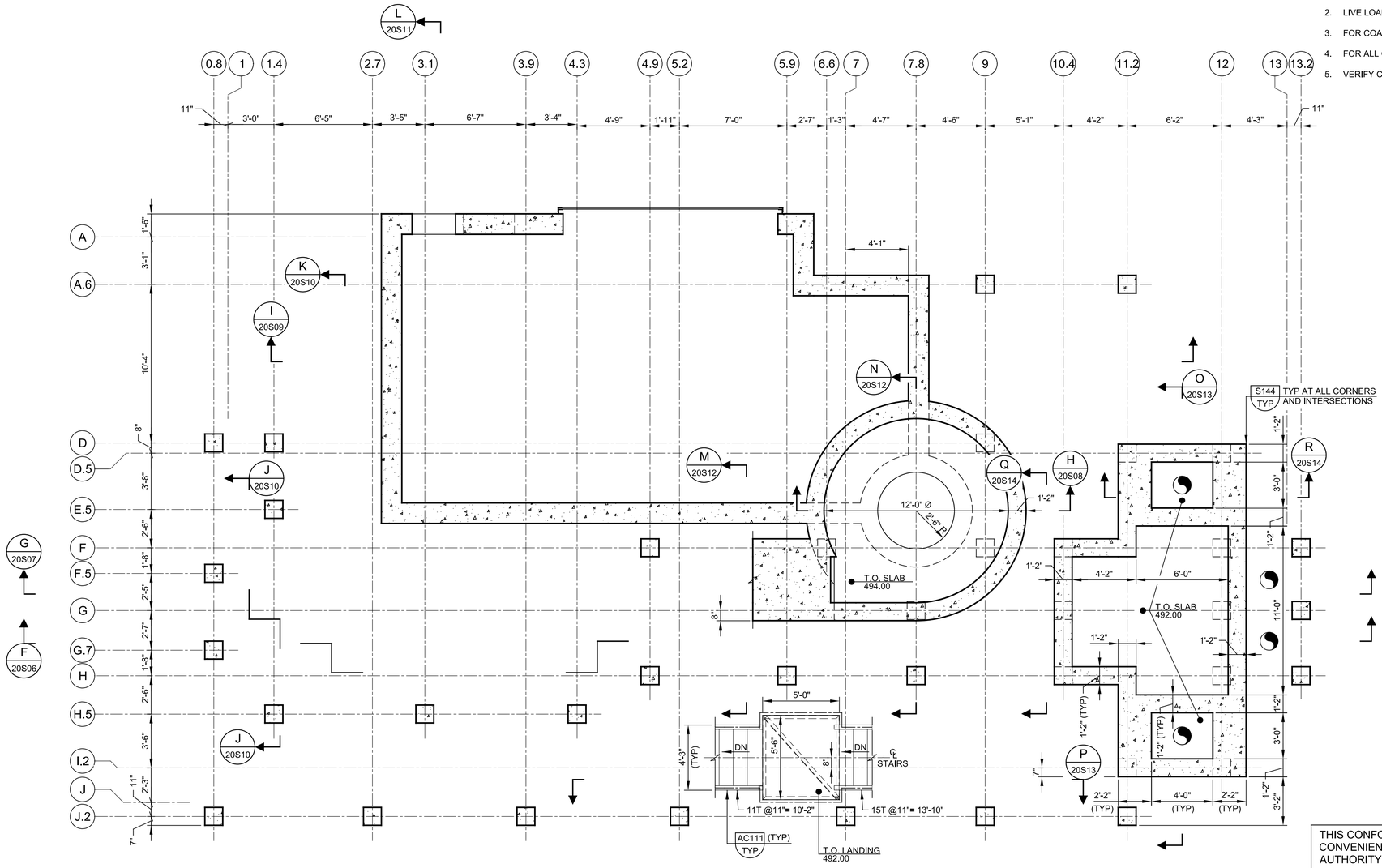

C INTERMEDIATE PLAN - EL. 494.00'

SCALE: 1/4" = 1'-0"
FILE: 10976A1020S104

THIS CONFORMED DOCUMENT IS RELEASED FOR THE CONVENIENCE OF THE CONTRACTOR UNDER THE AUTHORITY OF:

11-01-22

DANNY M HURTADO, P.E. DATE
TX LIC NO. 104266

SEE DISCLAIMER FOR LIMITATIONS OF USE.

CONTRACT DOCUMENTS DATED JUNE 10, 2022, AS PART OF THE BIDDING DOCUMENTS (DRAWINGS AND SPECIFICATIONS) AND SUBSEQUENTLY ISSUED ADDENDA HAVE BEEN MERGED INTO ONE CONFORMING SET OF DOCUMENTS FOR THE CONVENIENCE OF THE CONTRACTOR. IF INCONSISTENCIES OR AMBIGUITIES BETWEEN "CONFORMED" DOCUMENTS AND CONTRACT DOCUMENTS ARE FOUND, THE CONTRACT DOCUMENTS SHALL GOVERN.

REV	DATE	BY	DESCRIPTION
			CONFORMED DOCUMENTS

DESIGNED KMD
DRAWN JLH
CHECKED JDS
DATE NOVEMBER 2022

** ORIGINAL SEALED BY KWASI DUOSE 06-10-22 TX PE 100650 **

carollo®
TBPELS No. F-882

CITY OF AUSTIN
CITY OF AUSTIN

CITY OF AUSTIN
WILD HORSE RANCH WWTP EXPANSION
STRUCTURAL
HEADWORKS
INTERMEDIATE PLAN - EL. 494.00'

VERIFY SCALES
BAR IS ONE INCH ON ORIGINAL DRAWING
0 1"
IF NOT ONE INCH ON THIS SHEET, ADJUST SCALES ACCORDINGLY

JOB NO. 10976A.00
DRAWING NO. 20S03
SHEET NO. 324 OF 464

Plot Date: 10-OCT-2022 12:19:24 PM
User: LDietzel
PlotScale: 1:1
DesignScript: Carollo_Std_Pen_v0905.pen
ColorTable: gshade.ctb
Model: Layout1
LAST SAVED BY: dentriquez

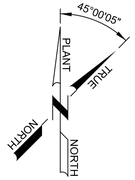

GENERAL NOTES:

1. FOR GENERAL STRUCTURAL NOTES SEE DWG 00GS01.
2. LIVE LOAD = 100 PSF.
3. FOR COATINGS SEE SPECIFICATION SECTION 09960.
4. FOR ALL OPENINGS IN CONCRETE SLABS OR WALLS SEE S180/TYP.
5. VERIFY COORDINATES WITH CIVIL DRAWINGS.

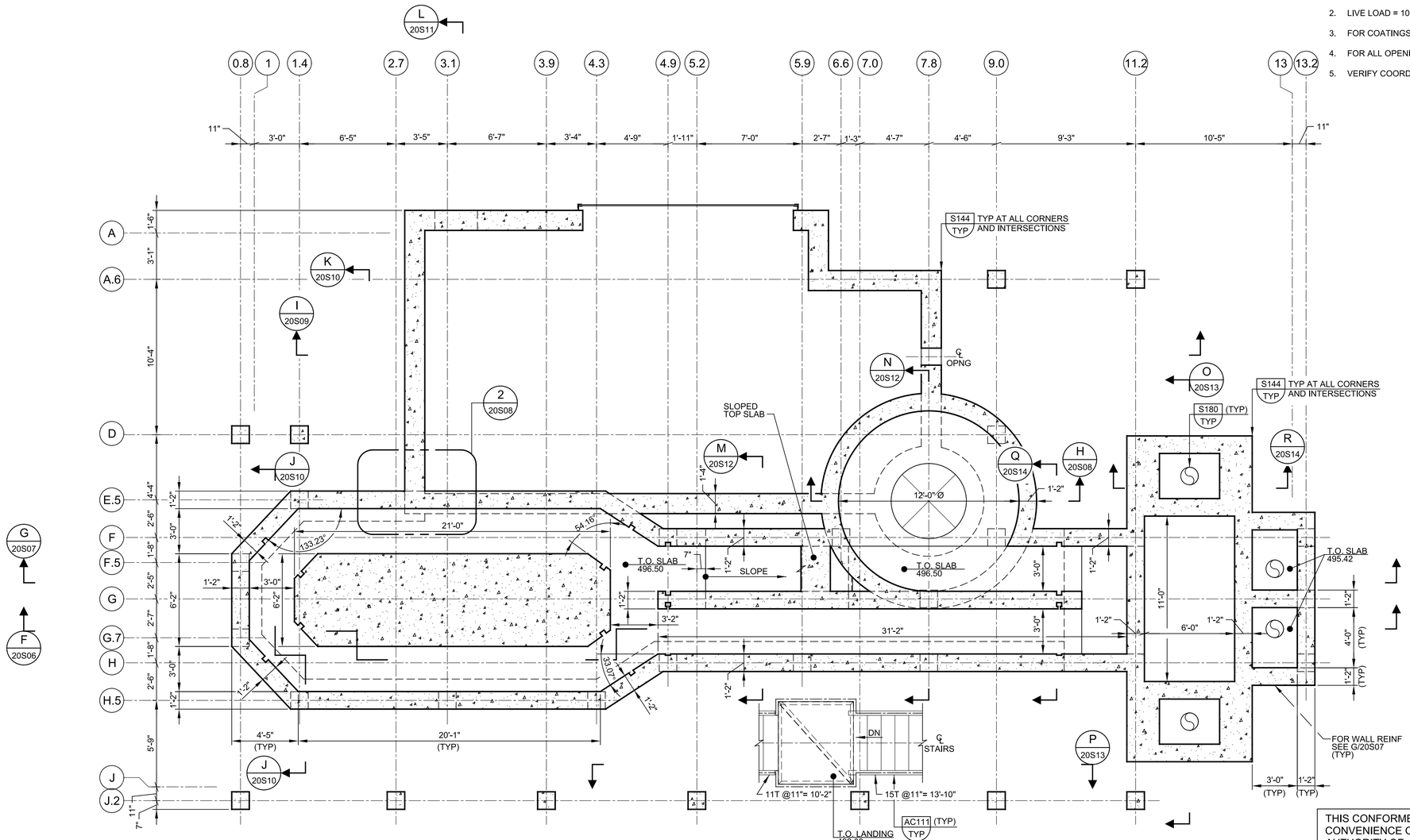

D INTERMEDIATE PLAN - EL. 496.50'

SCALE: 1/4" = 1'-0"
FILE: 10976A1020S103

THIS CONFORMED DOCUMENT IS RELEASED FOR THE CONVENIENCE OF THE CONTRACTOR UNDER THE AUTHORITY OF:

11-01-22
DANNY M HURTADO, P.E. DATE
TX LIC NO. 104266

SEE DISCLAIMER FOR LIMITATIONS OF USE.

CONTRACT DOCUMENTS DATED JUNE 10, 2022, AS PART OF THE BIDDING DOCUMENTS (DRAWINGS AND SPECIFICATIONS) AND SUBSEQUENTLY ISSUED ADDENDA HAVE BEEN MERGED INTO ONE CONFORMING SET OF DOCUMENTS FOR THE CONVENIENCE OF THE CONTRACTOR. IF INCONSISTENCIES OR AMBIGUITIES BETWEEN "CONFORMED" DOCUMENTS AND CONTRACT DOCUMENTS ARE FOUND, THE CONTRACT DOCUMENTS SHALL GOVERN.

REV	DATE	BY	DESCRIPTION
			CONFORMED DOCUMENTS

DESIGNED KMD
DRAWN JLH
CHECKED JDS
DATE NOVEMBER 2022

** ORIGINAL SEALED BY KWASI DUOSE 06-10-22 TX PE 100650 **

carollo®
TBPELS No. F-882

CITY OF AUSTIN
FOUNDED 1839
CITY OF AUSTIN

CITY OF AUSTIN
WILD HORSE RANCH WWTP EXPANSION
STRUCTURAL
HEADWORKS
INTERMEDIATE PLAN - EL. 496.50'

VERIFY SCALES
BAR IS ONE INCH ON ORIGINAL DRAWING
0 1"
IF NOT ONE INCH ON THIS SHEET, ADJUST SCALES ACCORDINGLY

JOB NO. 10976A.00
DRAWING NO. 20S04
SHEET NO. 325 OF 464

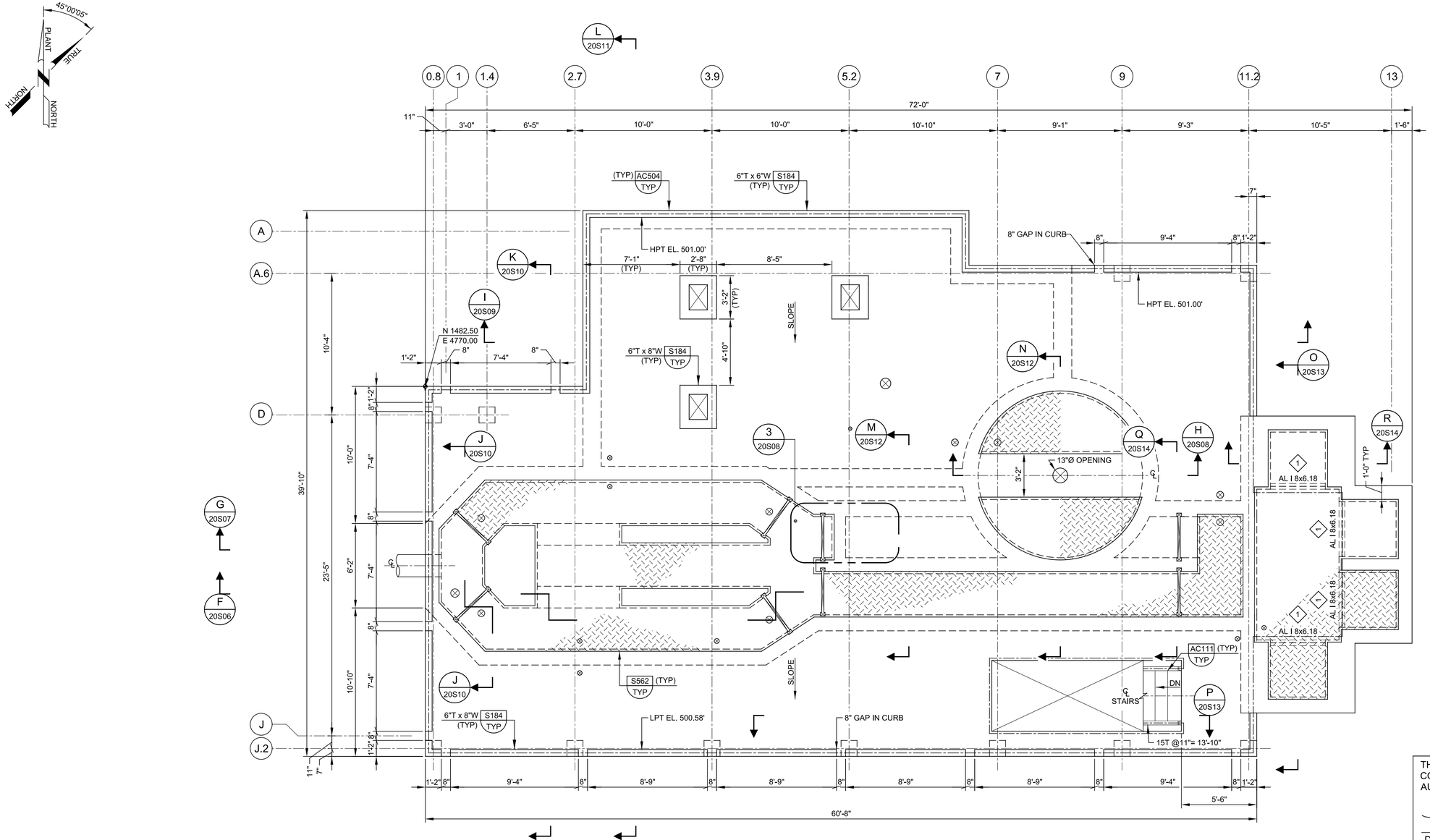

E UPPER PLAN - EL. 501.00'

SCALE: 1/4" = 1'-0"
FILE: 10976A1020S102

GENERAL NOTES:

1. FOR GENERAL STRUCTURAL NOTES SEE DWG 00GS01.
2. LIVE LOAD = 100 PSF.
3. FOR COATINGS SEE SPECIFICATION SECTION 09960.
4. FOR ALL OPENINGS IN CONCRETE SLABS OR WALLS SEE S180/TYP.
5. VERIFY COORDINATES WITH CIVIL DRAWINGS.

KEY NOTES:

1. CONNECTION OF BEAM TO CONCRETE PER S550/TYP.

THIS CONFORMED DOCUMENT IS RELEASED FOR THE CONVENIENCE OF THE CONTRACTOR UNDER THE AUTHORITY OF:

11-01-22

DANNY M HURTADO, P.E. DATE
TX LIC NO. 104266

SEE DISCLAIMER FOR LIMITATIONS OF USE.

CONTRACT DOCUMENTS DATED JUNE 10, 2022, AS PART OF THE BIDDING DOCUMENTS (DRAWINGS AND SPECIFICATIONS) AND SUBSEQUENTLY ISSUED ADDENDA HAVE BEEN MERGED INTO ONE CONFORMING SET OF DOCUMENTS FOR THE CONVENIENCE OF THE CONTRACTOR. IF INCONSISTENCIES OR AMBIGUITIES BETWEEN "CONFORMED" DOCUMENTS AND CONTRACT DOCUMENTS ARE FOUND, THE CONTRACT DOCUMENTS SHALL GOVERN.

REV	DATE	BY	DESCRIPTION
			CONFORMED DOCUMENTS

DESIGNED KMD
DRAWN JLH
CHECKED JDS
DATE NOVEMBER 2022

** ORIGINAL SEALED BY KWASI DUOSE 06-10-22 TX PE 100650 **

carollo® TBPELS No. F-882

CITY OF AUSTIN — FOUNDED 1839

CITY OF AUSTIN

CITY OF AUSTIN
WILD HORSE RANCH WWTP EXPANSION
STRUCTURAL
HEADWORKS
UPPER PLAN - EL. 501.00'

VERIFY SCALES
BAR IS ONE INCH ON ORIGINAL DRAWING
0 1"
IF NOT ONE INCH ON THIS SHEET, ADJUST SCALES ACCORDINGLY

JOB NO. 10976A.00
DRAWING NO. 20S05
SHEET NO. 326 OF 464

Plot Date: 10-OCT-2022 12:30:02 PM
User: LDietzel
Model: Layout1 ColorTable: gshade.ctb DesignScript: Carollo_Std_Pen_v0905.pen PlotScale: 1:1
LAST SAVED BY: denriquez
PROJECT NO. 10976A10 FILE NAME: 10976A1020S005.dgn

Plot Date: 10-OCT-2022 12:33:03 PM
User: LDietzel
PlotScale: 1:1
DesignScript: Carollo_Std_Pen_v0905.pen
ColorTable: gshade.ctb
Model: Layout1
LAST SAVED BY: jhill

GENERAL NOTES:

1. FOR GENERAL STRUCTURAL NOTES SEE DWG 00GS01.
2. LIVE LOAD = 100 PSF.
3. FOR COATINGS SEE SPECIFICATION SECTION 09960.
4. FOR ALL OPENINGS IN CONCRETE SLABS OR WALLS SEE S180/TYP.
5. VERIFY COORDINATES WITH CIVIL DRAWINGS.

(#) KEY NOTES:

1. LAP TOP REINFORCING BETWEEN COLUMN SUPPORTS AND LAP BOTTOM REINFORCING AT COLUMN SUPPORTS.
2. CONNECTION OF BEAM TO CONCRETE PER S550/TYP.

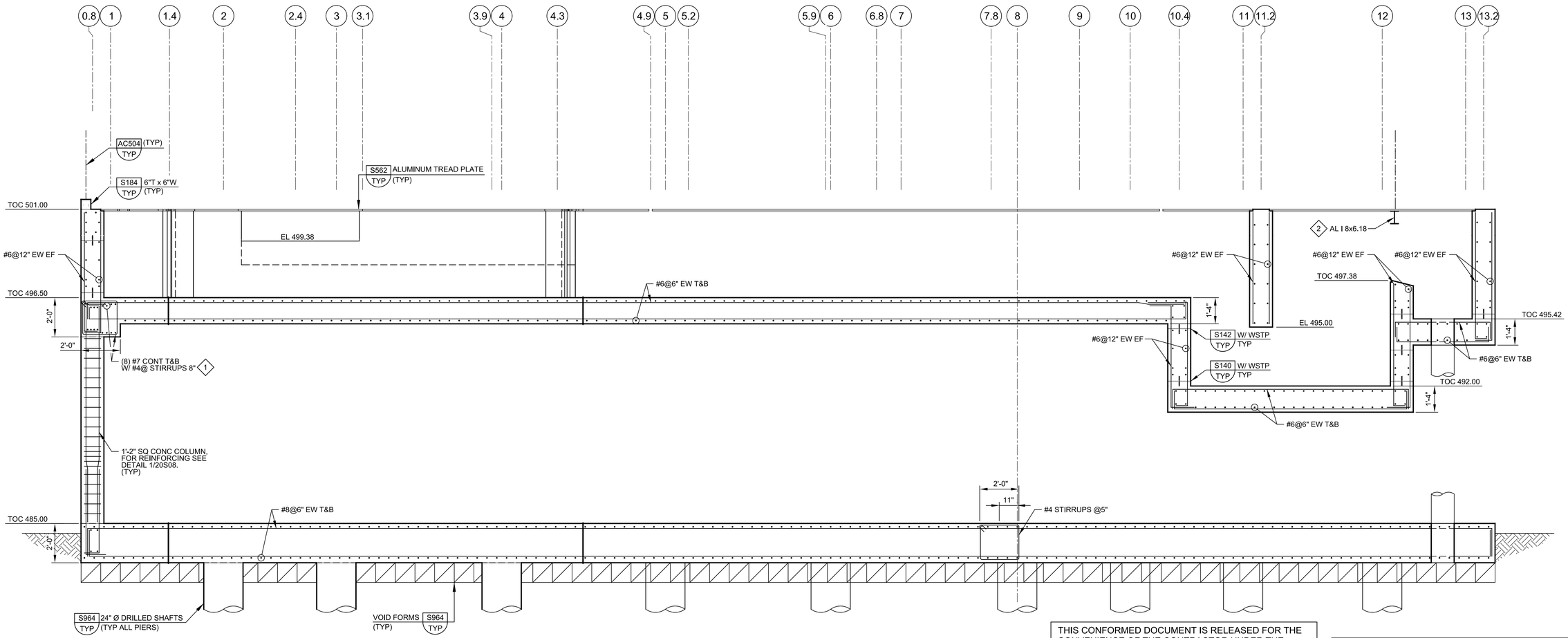

F SECTION

20S01

SCALE: 3/8" = 1'-0"
FILE: 10976A1020S301

THIS CONFORMED DOCUMENT IS RELEASED FOR THE CONVENIENCE OF THE CONTRACTOR UNDER THE AUTHORITY OF:

DANNY M HURTADO, P.E.
TX LIC NO. 104266

11-01-22
DATE

SEE DISCLAIMER FOR LIMITATIONS OF USE.

CONTRACT DOCUMENTS DATED JUNE 10, 2022, AS PART OF THE BIDDING DOCUMENTS (DRAWINGS AND SPECIFICATIONS) AND SUBSEQUENTLY ISSUED ADDENDA HAVE BEEN MERGED INTO ONE CONFORMING SET OF DOCUMENTS FOR THE CONVENIENCE OF THE CONTRACTOR. IF INCONSISTENCIES OR AMBIGUITIES BETWEEN "CONFORMED" DOCUMENTS AND CONTRACT DOCUMENTS ARE FOUND, THE CONTRACT DOCUMENTS SHALL GOVERN.

REV	DATE	BY	DESCRIPTION
			CONFORMED DOCUMENTS

DESIGNED KMD
DRAWN JLH
CHECKED JDS
DATE NOVEMBER 2022

** ORIGINAL SEALED BY KWASI DUOSE 06-10-22 TX PE 100650 **

carollo®
TBPELS No. F-882

CITY OF AUSTIN
FOUNDED 1839

CITY OF AUSTIN

CITY OF AUSTIN
WILD HORSE RANCH WWTP EXPANSION
STRUCTURAL
HEADWORKS
SECTIONS AND DETAILS 1

VERIFY SCALES
BAR IS ONE INCH ON ORIGINAL DRAWING
0 1"
IF NOT ONE INCH ON THIS SHEET, ADJUST SCALES ACCORDINGLY

JOB NO. 10976A.00
DRAWING NO. 20S06
SHEET NO. 327 OF 464

PROJECT NO. 10976A10 FILE NAME: 10976A1020S006.dgn

Plot Date: 10-OCT-2022 12:35:42 PM
User: LDietzel
PlotScale: 1:1
DesignScript: Carollo_Std_Pen_v0905.pen
ColorTable: gshade.ctb
Model: Layout1
LAST SAVED BY: denriquez

GENERAL NOTES:

1. FOR GENERAL STRUCTURAL NOTES SEE DWG 00GS01.
2. LIVE LOAD = 100 PSF.
3. FOR COATINGS SEE SPECIFICATION SECTION 09960.
4. FOR ALL OPENINGS IN CONCRETE SLABS OR WALLS SEE S180/TYP.
5. VERIFY COORDINATES WITH CIVIL DRAWINGS.

(#) KEY NOTES:

1. LAP TOP REINFORCING BETWEEN COLUMN SUPPORTS AND LAP BOTTOM REINFORCING AT COLUMN SUPPORTS.
2. CONNECTION OF BEAM TO CONCRETE PER S550/TYP.

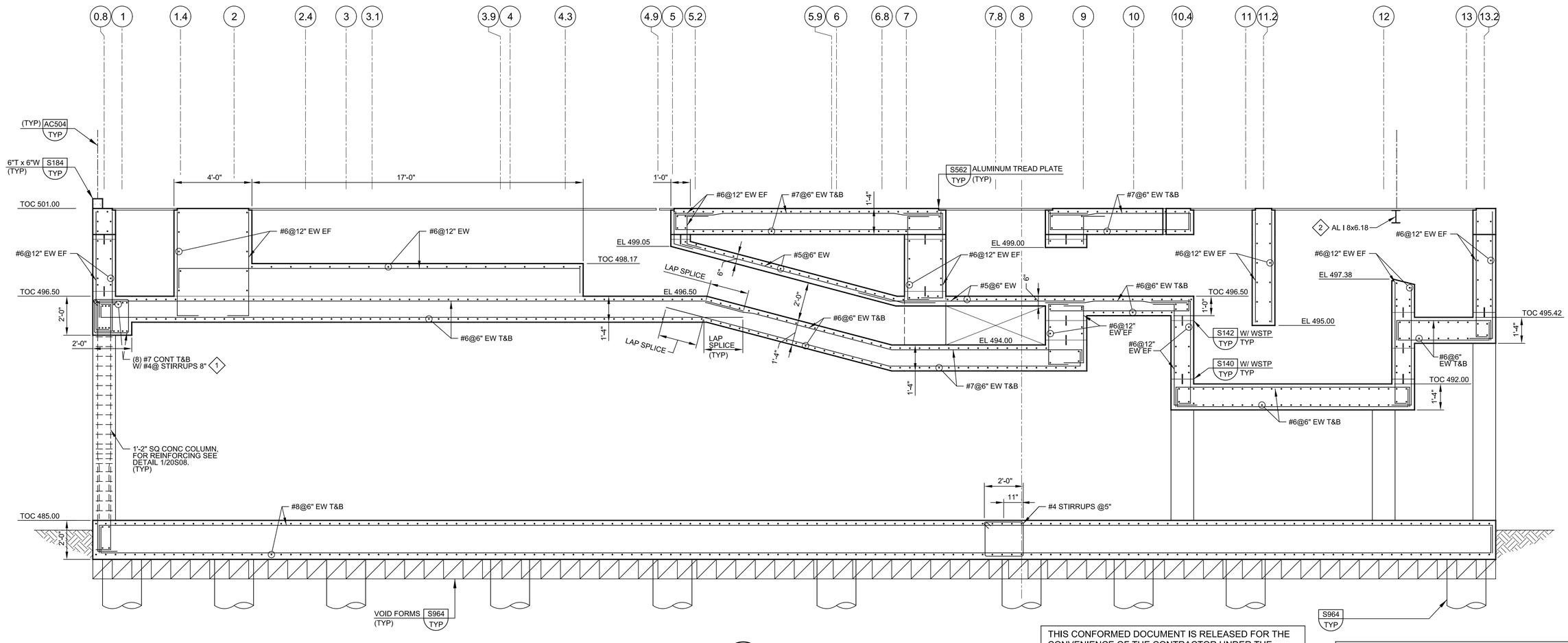

G 20S01 SECTION

SCALE: 3/8" = 1'-0"
FILE: 10976A1020S302

THIS CONFORMED DOCUMENT IS RELEASED FOR THE CONVENIENCE OF THE CONTRACTOR UNDER THE AUTHORITY OF:

DANNY M HURTADO, P.E.
TX LIC NO. 104266
24" Ø DRILLED SHAFTS
CITY OF AUSTIN

11-01-22
DATE

SEE DISCLAIMER FOR LIMITATIONS OF USE.

CONTRACT DOCUMENTS DATED JUNE 10, 2022, AS PART OF THE BIDDING DOCUMENTS (DRAWINGS AND SPECIFICATIONS) AND SUBSEQUENTLY ISSUED ADDENDA HAVE BEEN MERGED INTO ONE CONFORMING SET OF DOCUMENTS FOR THE CONVENIENCE OF THE CONTRACTOR. IF INCONSISTENCIES OR AMBIGUITIES BETWEEN "CONFORMED" DOCUMENTS AND CONTRACT DOCUMENTS ARE FOUND, THE CONTRACT DOCUMENTS SHALL GOVERN.

REV	DATE	BY	DESCRIPTION
			CONFORMED DOCUMENTS

DESIGNED KMD
DRAWN JLH
CHECKED JDS
DATE NOVEMBER 2022

** ORIGINAL SEALED BY KWASI DUOSE 06-10-22 TX PE 100650 **

carollo®
TBPELS No. F-882

CITY OF AUSTIN
FOUNDED 1839

CITY OF AUSTIN

CITY OF AUSTIN
WILD HORSE RANCH WWTP EXPANSION
STRUCTURAL
HEADWORKS
SECTIONS AND DETAILS 2

VERIFY SCALES
BAR IS ONE INCH ON ORIGINAL DRAWING
0 1"
IF NOT ONE INCH ON THIS SHEET, ADJUST SCALES ACCORDINGLY

JOB NO. 10976A.00
DRAWING NO. 20S07
SHEET NO. 328 OF 464

PROJECT NO. 10976A10 FILE NAME: 10976A1020S007.dgn

Plot Date: 10-OCT-2022 12:37:22 PM
User: LDietzel
PlotScale: 1:1
DesignScript: Carollo_Std_Pen_v0905.pen
ColorTable: gshade.ctb
Model: Layout1
LAST SAVED BY: jhill

GENERAL NOTES:

1. FOR GENERAL STRUCTURAL NOTES SEE DWG 00GS01.
2. LIVE LOAD = 100 PSF.
3. FOR COATINGS SEE SPECIFICATION SECTION 09960.
4. FOR ALL OPENINGS IN CONCRETE SLABS OR WALLS SEE S180/TYP.
5. VERIFY COORDINATES WITH CIVIL DRAWINGS.

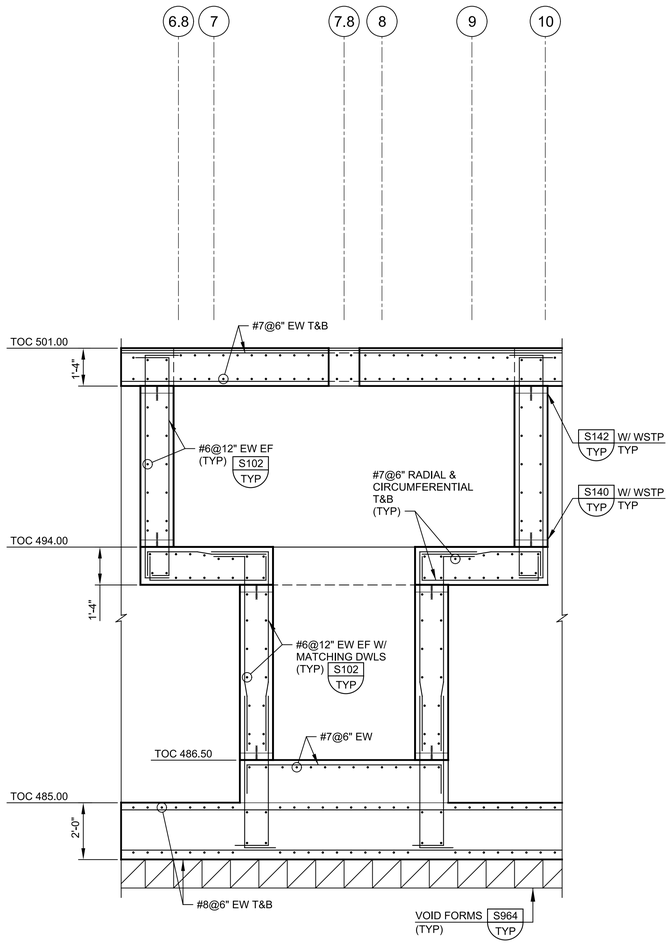

H SECTION
20S01
SCALE: 3/8" = 1'-0"
FILE: 10976A1020S306

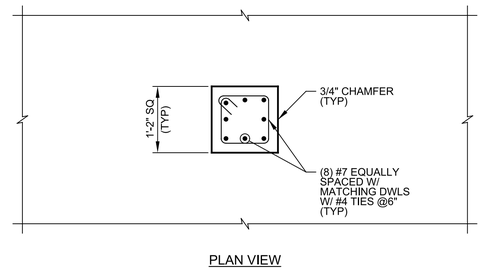

PLAN VIEW

1 DETAIL
20S02
SCALE: 3/4" = 1'-0"
FILE: 10976A1020S101

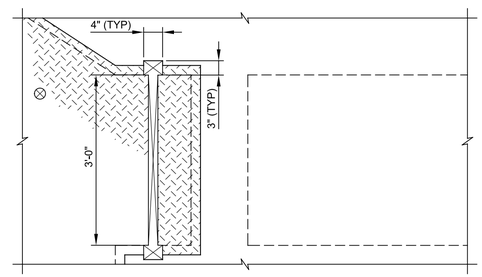

3 DETAIL
20S05
SCALE: 3/4" = 1'-0"
FILE: 10976A1020S102

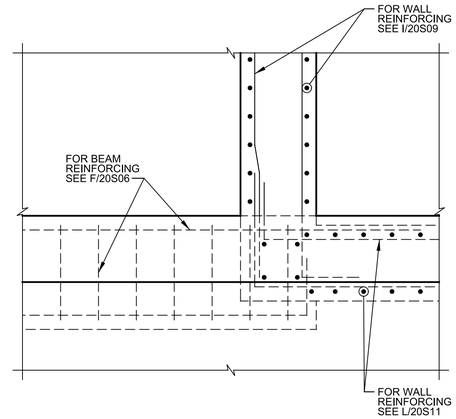

2 DETAIL
20S04
SCALE: 3/4" = 1'-0"
FILE: 10976A1020S103

THIS CONFORMED DOCUMENT IS RELEASED FOR THE CONVENIENCE OF THE CONTRACTOR UNDER THE AUTHORITY OF:

11-01-22
DANNY M HURTADO, P.E. DATE
TX LIC NO. 104266

SEE DISCLAIMER FOR LIMITATIONS OF USE.

CONTRACT DOCUMENTS DATED JUNE 10, 2022, AS PART OF THE BIDDING DOCUMENTS (DRAWINGS AND SPECIFICATIONS) AND SUBSEQUENTLY ISSUED ADDENDA HAVE BEEN MERGED INTO ONE CONFORMING SET OF DOCUMENTS FOR THE CONVENIENCE OF THE CONTRACTOR. IF INCONSISTENCIES OR AMBIGUITIES BETWEEN "CONFORMED" DOCUMENTS AND CONTRACT DOCUMENTS ARE FOUND, THE CONTRACT DOCUMENTS SHALL GOVERN.

REV	DATE	BY	DESCRIPTION
			CONFORMED DOCUMENTS

DESIGNED KMD
DRAWN JLH
CHECKED JDS
DATE NOVEMBER 2022

** ORIGINAL SEALED BY KWASI DUOSE 06-10-22 TX PE 100650 **

carollo®
TBPELS No. F-882

CITY OF AUSTIN
FOUNDED 1839

CITY OF AUSTIN

CITY OF AUSTIN
WILD HORSE RANCH WWTP EXPANSION
STRUCTURAL
HEADWORKS
SECTIONS AND DETAILS 3

VERIFY SCALES
BAR IS ONE INCH ON ORIGINAL DRAWING
0 1"
IF NOT ONE INCH ON THIS SHEET, ADJUST SCALES ACCORDINGLY

JOB NO. 10976A.00
DRAWING NO. 20S08
SHEET NO. 329 OF 464

PROJECT NO. 10976A10 FILE NAME: 10976A1020S008.dgn

Plot Date: 10-OCT-2022 12:39:14 PM
User: LDietzel
PlotScale: 1:1
DesignScript: Carollo_Std_Pen_v0905.pen
ColorTable: gshade.ctb
Model: Layout1
LAST SAVED BY: jhill

GENERAL NOTES:

1. FOR GENERAL STRUCTURAL NOTES SEE DWG 00GS01.
2. LIVE LOAD = 100 PSF.
3. FOR COATINGS SEE SPECIFICATION SECTION 09960.
4. FOR ALL OPENINGS IN CONCRETE SLABS OR WALLS SEE S180/TYP.
5. VERIFY COORDINATES WITH CIVIL DRAWINGS.

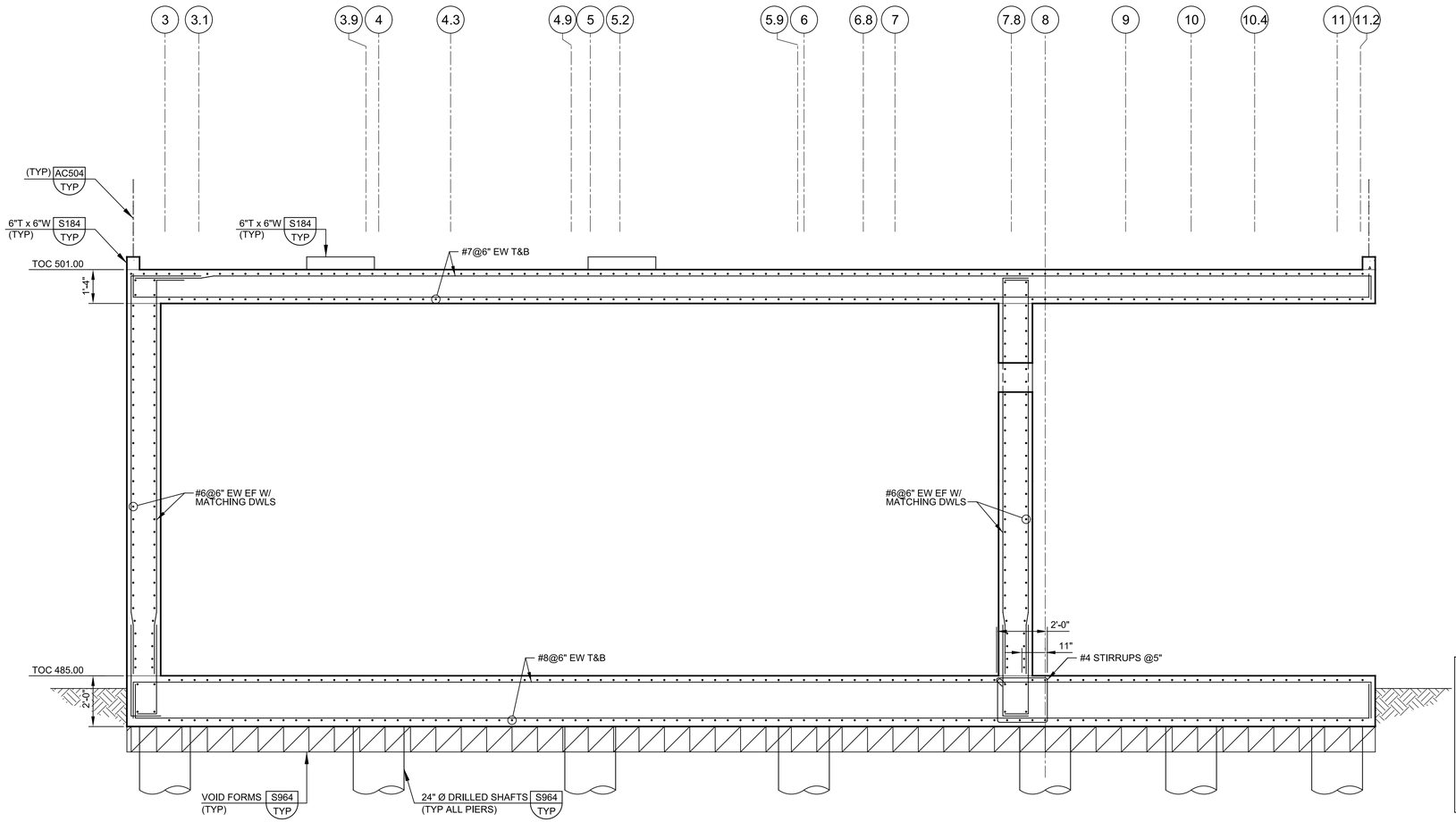

I 20S01 **SECTION**
SCALE: 3/8" = 1'-0"
FILE: 10976A1020S303

THIS CONFORMED DOCUMENT IS RELEASED FOR THE CONVENIENCE OF THE CONTRACTOR UNDER THE AUTHORITY OF:

11-01-22
DANNY M HURTADO, P.E. DATE
TX LIC NO. 104266

SEE DISCLAIMER FOR LIMITATIONS OF USE.

CONTRACT DOCUMENTS DATED JUNE 10, 2022, AS PART OF THE BIDDING DOCUMENTS (DRAWINGS AND SPECIFICATIONS) AND SUBSEQUENTLY ISSUED ADDENDA HAVE BEEN MERGED INTO ONE CONFORMING SET OF DOCUMENTS FOR THE CONVENIENCE OF THE CONTRACTOR. IF INCONSISTENCIES OR AMBIGUITIES BETWEEN "CONFORMED" DOCUMENTS AND CONTRACT DOCUMENTS ARE FOUND, THE CONTRACT DOCUMENTS SHALL GOVERN.

REV	DATE	BY	DESCRIPTION
			CONFORMED DOCUMENTS

DESIGNED KMD
DRAWN JLH
CHECKED JDS
DATE NOVEMBER 2022

** ORIGINAL SEALED BY KWASI DUOSE 06-10-22 TX PE 100650 **

carollo®
TBPELS No. F-882

CITY OF AUSTIN
FOUNDED 1839

CITY OF AUSTIN

CITY OF AUSTIN
WILD HORSE RANCH WWTP EXPANSION
STRUCTURAL
HEADWORKS
SECTIONS AND DETAILS 4

VERIFY SCALES
BAR IS ONE INCH ON ORIGINAL DRAWING
0 1"
IF NOT ONE INCH ON THIS SHEET, ADJUST SCALES ACCORDINGLY

JOB NO. 10976A.00
DRAWING NO. 20S09
SHEET NO. 330 OF 464

PROJECT NO. 10976A10 FILE NAME: 10976A1020S009.dgn

THIS CONFORMED DOCUMENT IS RELEASED FOR THE CONVENIENCE OF THE CONTRACTOR UNDER THE AUTHORITY OF:

DANNY M HURTADO, P.E.
TX LIC NO. 104266

11-01-22
DATE

SEE DISCLAIMER FOR LIMITATIONS OF USE.

CONTRACT DOCUMENTS DATED JUNE 10, 2022, AS PART OF THE BIDDING DOCUMENTS (DRAWINGS AND SPECIFICATIONS) AND SUBSEQUENTLY ISSUED ADDENDA HAVE BEEN MERGED INTO ONE CONFORMING SET OF DOCUMENTS FOR THE CONVENIENCE OF THE CONTRACTOR. IF INCONSISTENCIES OR AMBIGUITIES BETWEEN "CONFORMED" DOCUMENTS AND CONTRACT DOCUMENTS ARE FOUND, THE CONTRACT DOCUMENTS SHALL GOVERN.

GENERAL NOTES:

1. FOR GENERAL STRUCTURAL NOTES SEE DWG 00GS01.
2. LIVE LOAD = 100 PSF.
3. FOR COATINGS SEE SPECIFICATION SECTION 09960.
4. FOR ALL OPENINGS IN CONCRETE SLABS OR WALLS SEE S180/TYP.
5. VERIFY COORDINATES WITH CIVIL DRAWINGS.

KEY NOTES:

1. LAP TOP REINFORCING BETWEEN COLUMN SUPPORTS AND LAP BOTTOM REINFORCING AT COLUMN SUPPORTS.

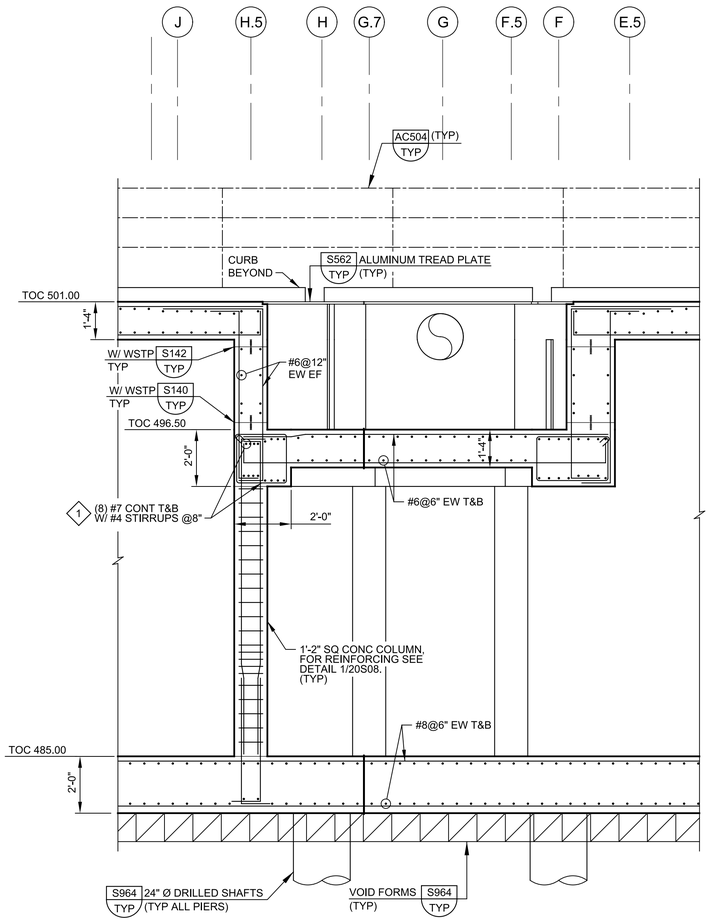

J SECTION

20S01

SCALE: 3/8" = 1'-0"
FILE: 10976A1020S309

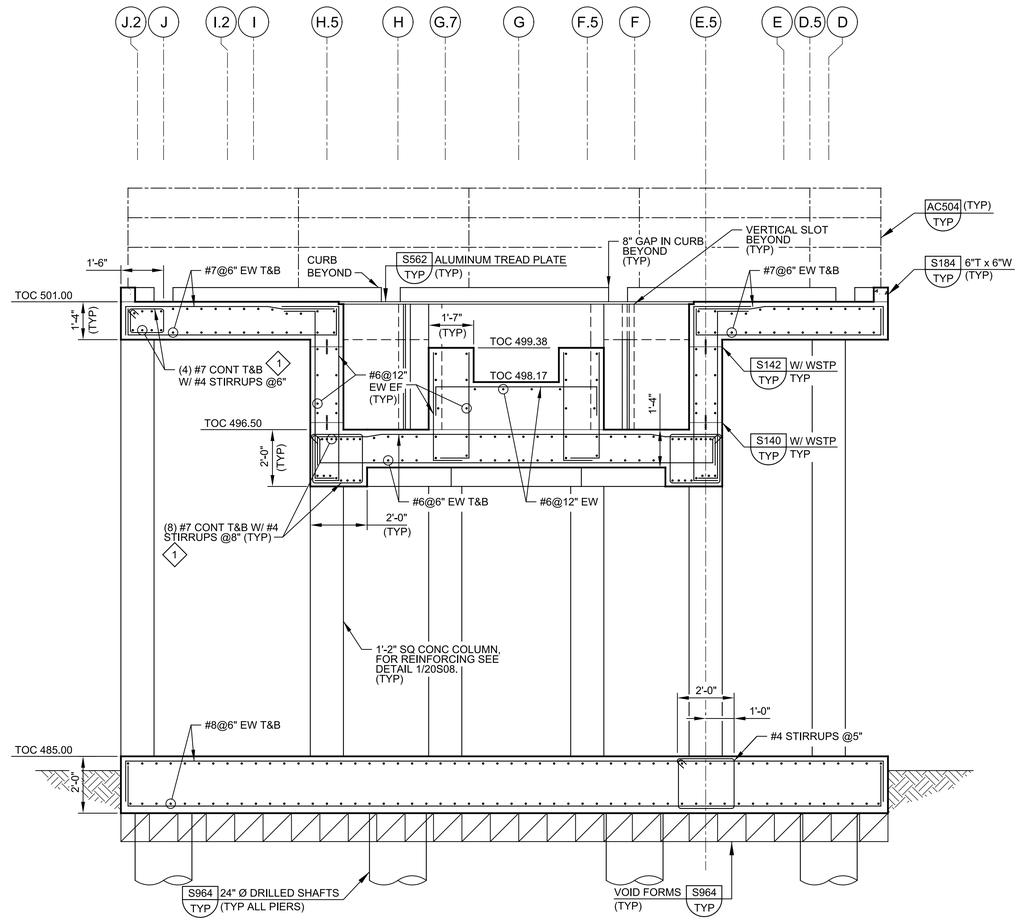

K SECTION

20S01

SCALE: 3/8" = 1'-0"
FILE: 10976A1020S304

REV	DATE	BY	DESCRIPTION
			CONFORMED DOCUMENTS

DESIGNED KMD
DRAWN JLH
CHECKED JDS
DATE NOVEMBER 2022

** ORIGINAL SEALED BY KWASI DUOSE 06-10-22 TX PE 100650 **

carollo®
TBPELS No. F-882

CITY OF AUSTIN
FOUNDED 1839

CITY OF AUSTIN

CITY OF AUSTIN
WILD HORSE RANCH WWTP EXPANSION
STRUCTURAL
HEADWORKS
SECTIONS AND DETAILS 5

VERIFY SCALES
BAR IS ONE INCH ON ORIGINAL DRAWING
0 1"
IF NOT ONE INCH ON THIS SHEET, ADJUST SCALES ACCORDINGLY

JOB NO. 10976A.00
DRAWING NO. 20S10
SHEET NO. 331 OF 464

PROJECT NO. 10976A10 FILE NAME: 10976A1020S010.dgn

Plot Date: 10-OCT-2022 12:41:09 PM
User: LDietzel
PlotScale: 1:1
DesignScript: Carollo_Std_Pen_v0905.pen
ColorTable: gshade.ctb
Model: Layout1
LAST SAVED BY: denriquez

Plot Date: 10-OCT-2022 12:42:44 PM
User: LDietzel
PlotScale: 1:1
DesignScript: Carollo_Std_Pen_v0905.pen
ColorTable: gshade.ctb
Model: Layout1
LAST SAVED BY: jhill

GENERAL NOTES:

1. FOR GENERAL STRUCTURAL NOTES SEE DWG 00GS01.
2. LIVE LOAD = 100 PSF.
3. FOR COATINGS SEE SPECIFICATION SECTION 09960.
4. FOR ALL OPENINGS IN CONCRETE SLABS OR WALLS SEE S180/TYP.
5. VERIFY COORDINATES WITH CIVIL DRAWINGS.

◇# KEY NOTES:

1. LAP TOP REINFORCING BETWEEN COLUMN SUPPORTS AND LAP BOTTOM REINFORCING AT COLUMN SUPPORTS.

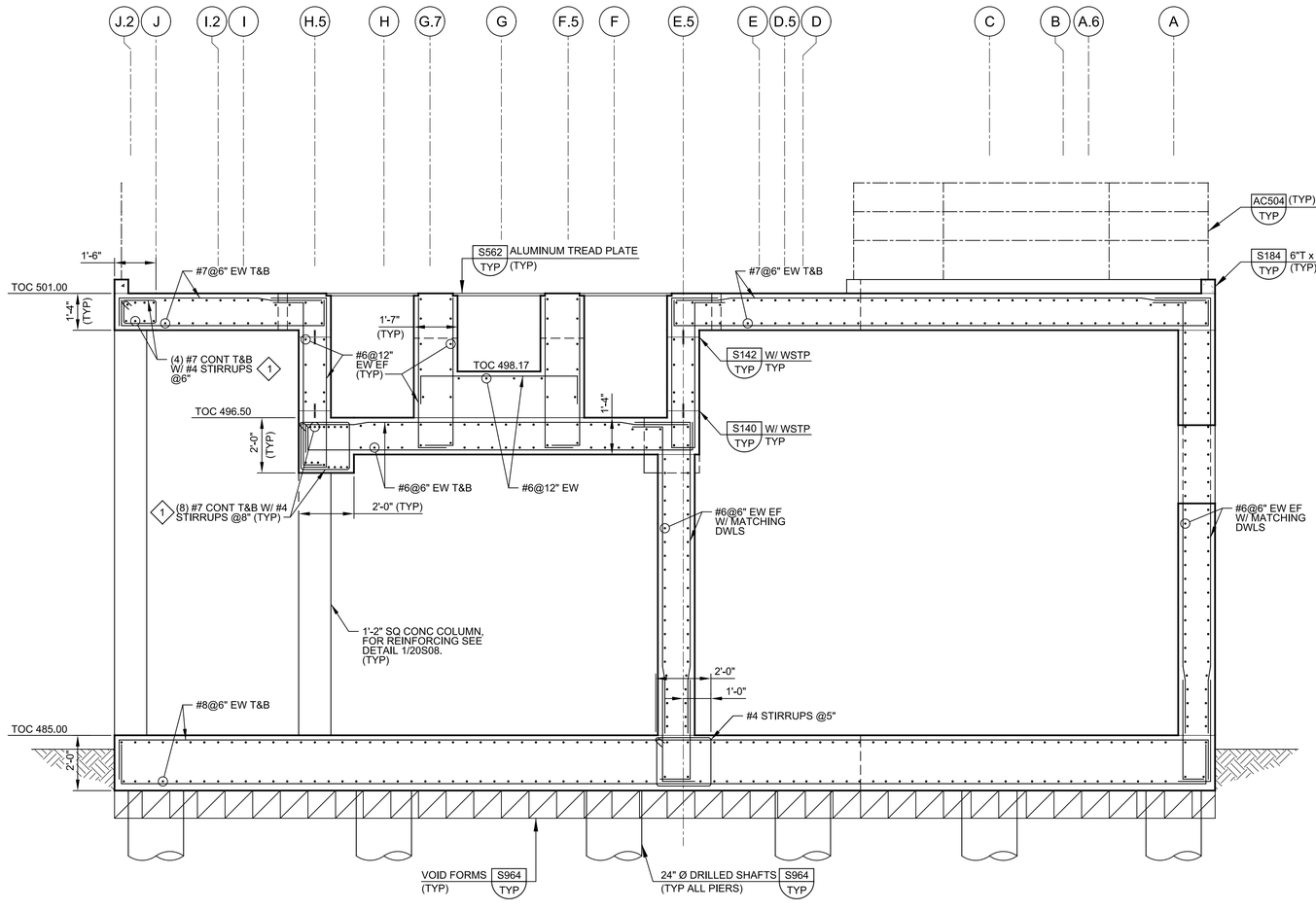

L 20S01 **SECTION**
SCALE: 3/8" = 1'-0"
FILE: 10976A1020S305

THIS CONFORMED DOCUMENT IS RELEASED FOR THE CONVENIENCE OF THE CONTRACTOR UNDER THE AUTHORITY OF:

11-01-22
DANNY M HURTADO, P.E. DATE
TX LIC NO. 104266

SEE DISCLAIMER FOR LIMITATIONS OF USE.

CONTRACT DOCUMENTS DATED JUNE 10, 2022, AS PART OF THE BIDDING DOCUMENTS (DRAWINGS AND SPECIFICATIONS) AND SUBSEQUENTLY ISSUED ADDENDA HAVE BEEN MERGED INTO ONE CONFORMING SET OF DOCUMENTS FOR THE CONVENIENCE OF THE CONTRACTOR. IF INCONSISTENCIES OR AMBIGUITIES BETWEEN "CONFORMED" DOCUMENTS AND CONTRACT DOCUMENTS ARE FOUND, THE CONTRACT DOCUMENTS SHALL GOVERN.

REV	DATE	BY	DESCRIPTION
			CONFORMED DOCUMENTS

DESIGNED KMD
DRAWN JLH
CHECKED JDS
DATE NOVEMBER 2022

** ORIGINAL SEALED BY KWASI DUOSE 06-10-22 TX PE 100650 **

carollo® TBPELS No. F-882

CITY OF AUSTIN — FOUNDED 1839

CITY OF AUSTIN

CITY OF AUSTIN
WILD HORSE RANCH WWTP EXPANSION
STRUCTURAL
HEADWORKS
SECTIONS AND DETAILS 6

VERIFY SCALES
BAR IS ONE INCH ON ORIGINAL DRAWING
0 1"
IF NOT ONE INCH ON THIS SHEET, ADJUST SCALES ACCORDINGLY

JOB NO. 10976A.00
DRAWING NO. 20S11
SHEET NO. 332 OF 464

Plot Date: 10-OCT-2022 12:44:16 PM
User: LDietzel
PlotScale: 1:1
DesignScript: Carollo_Std_Pen_v0905.pen
ColorTable: gshade.ctb
Model: Layout1
LAST SAVED BY: jhill

GENERAL NOTES:

1. FOR GENERAL STRUCTURAL NOTES SEE DWG 00GS01.
2. LIVE LOAD = 100 PSF.
3. FOR COATINGS SEE SPECIFICATION SECTION 09960.
4. FOR ALL OPENINGS IN CONCRETE SLABS OR WALLS SEE S180/TYP.
5. VERIFY COORDINATES WITH CIVIL DRAWINGS.

(#) KEY NOTES:

1. LAP TOP REINFORCING BETWEEN COLUMN SUPPORTS AND LAP BOTTOM REINFORCING AT COLUMN SUPPORTS.

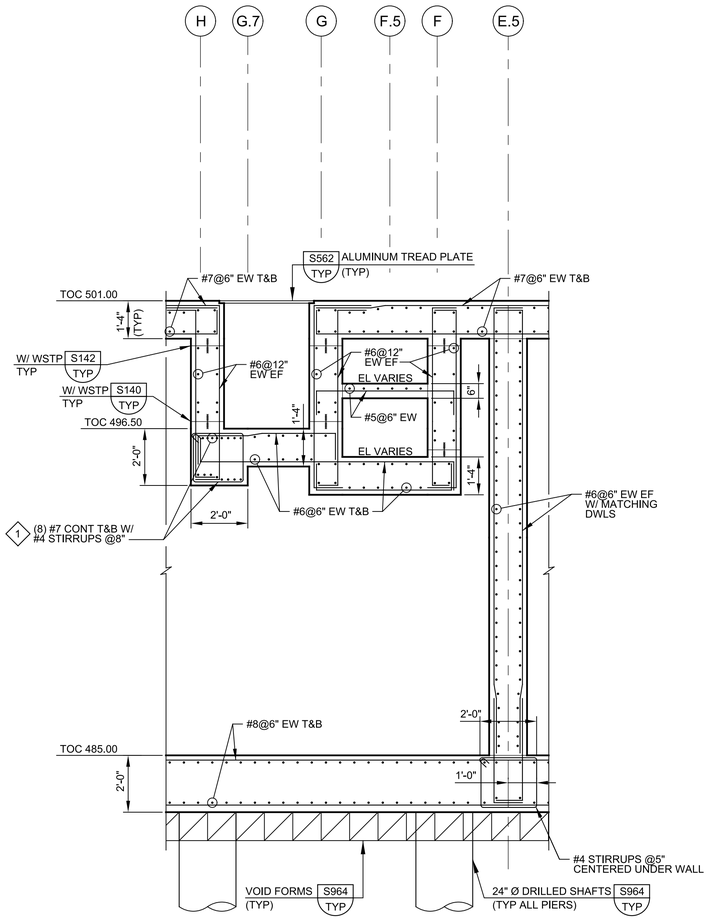

M SECTION
20S01
SCALE: 3/8" = 1'-0"
FILE: 10976A1020S311

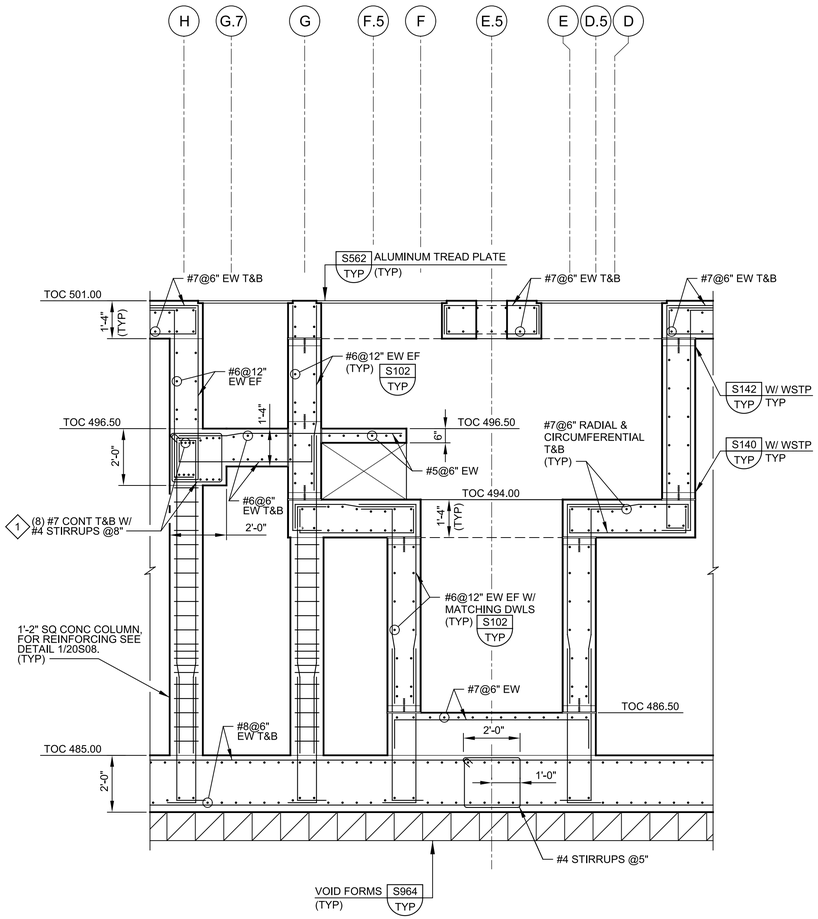

N SECTION
20S01
SCALE: 3/8" = 1'-0"
FILE: 10976A1020S307

THIS CONFORMED DOCUMENT IS RELEASED FOR THE CONVENIENCE OF THE CONTRACTOR UNDER THE AUTHORITY OF:

DANNY M HURTADO, P.E.
TX LIC NO. 104266
11-01-22
DATE

SEE DISCLAIMER FOR LIMITATIONS OF USE.

CONTRACT DOCUMENTS DATED JUNE 10, 2022, AS PART OF THE BIDDING DOCUMENTS (DRAWINGS AND SPECIFICATIONS) AND SUBSEQUENTLY ISSUED ADDENDA HAVE BEEN MERGED INTO ONE CONFORMING SET OF DOCUMENTS FOR THE CONVENIENCE OF THE CONTRACTOR. IF INCONSISTENCIES OR AMBIGUITIES BETWEEN "CONFORMED" DOCUMENTS AND CONTRACT DOCUMENTS ARE FOUND, THE CONTRACT DOCUMENTS SHALL GOVERN.

CONFORMED DOCUMENTS

REV	DATE	BY	DESCRIPTION

DESIGNED KMD
DRAWN JLH
CHECKED JDS
DATE NOVEMBER 2022

** ORIGINAL SEALED BY KWASI DUOSE 06-10-22 TX PE 100650 **

carollo®
TBPELS No. F-882

CITY OF AUSTIN
FOUNDED 1839
CITY OF AUSTIN

CITY OF AUSTIN
WILD HORSE RANCH WWTP EXPANSION
STRUCTURAL
HEADWORKS
SECTIONS AND DETAILS 7

VERIFY SCALES
BAR IS ONE INCH ON ORIGINAL DRAWING
0 1"
IF NOT ONE INCH ON THIS SHEET, ADJUST SCALES ACCORDINGLY

JOB NO. 10976A.00
DRAWING NO. 20S12
SHEET NO. 333 OF 464

PROJECT NO. 10976A10 FILE NAME: 10976A1020S012.dgn

THIS CONFORMED DOCUMENT IS RELEASED FOR THE CONVENIENCE OF THE CONTRACTOR UNDER THE AUTHORITY OF:

11-01-22

DANNY M HURTADO, P.E. DATE
TX LIC NO. 104266

SEE DISCLAIMER FOR LIMITATIONS OF USE.

CONTRACT DOCUMENTS DATED JUNE 10, 2022, AS PART OF THE BIDDING DOCUMENTS (DRAWINGS AND SPECIFICATIONS) AND SUBSEQUENTLY ISSUED ADDENDA HAVE BEEN MERGED INTO ONE CONFORMING SET OF DOCUMENTS FOR THE CONVENIENCE OF THE CONTRACTOR. IF INCONSISTENCIES OR AMBIGUITIES BETWEEN "CONFORMED" DOCUMENTS AND CONTRACT DOCUMENTS ARE FOUND, THE CONTRACT DOCUMENTS SHALL GOVERN.

GENERAL NOTES:

1. FOR GENERAL STRUCTURAL NOTES SEE DWG 00GS01.
2. LIVE LOAD = 100 PSF.
3. FOR COATINGS SEE SPECIFICATION SECTION 09960.
4. FOR ALL OPENINGS IN CONCRETE SLABS OR WALLS SEE S180/TYP.
5. VERIFY COORDINATES WITH CIVIL DRAWINGS.

◇# KEY NOTES:

1. CONNECTION OF BEAM TO CONCRETE PER S550/TYP.
2. STAIR PLATFORM SHALL BE A DELEGATED DESIGN. CONTRACTOR SHALL SUBMIT CALCULATIONS AND DRAWINGS SIGNED AND SEALED BY A TX PE FOR ENGINEERS REVIEW AND APPROVAL PRIOR TO CONSTRUCTION.

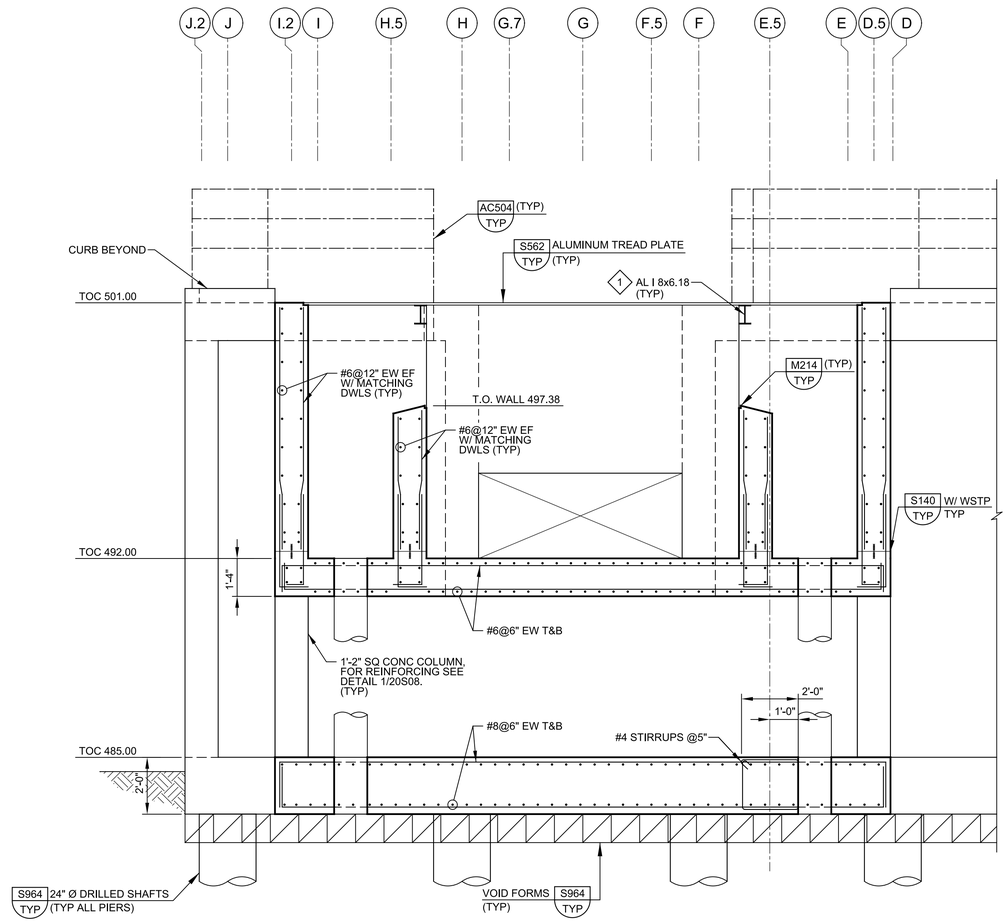

O SECTION
20S01
SCALE: 3/8" = 1'-0"
FILE: 10976A1020S308

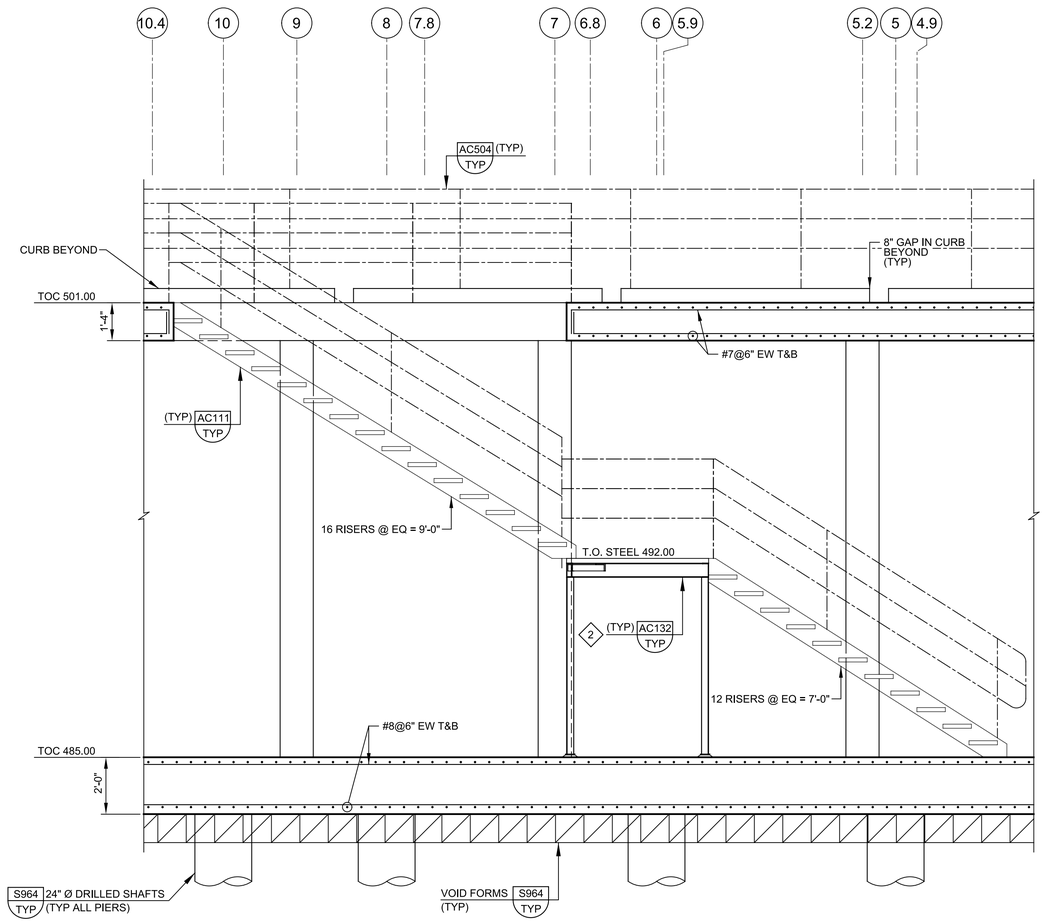

P SECTION
20S01
SCALE: 3/8" = 1'-0"
FILE: 10976A1020S310

REV	DATE	BY	DESCRIPTION
			CONFORMED DOCUMENTS

DESIGNED KMD
DRAWN JLH
CHECKED JDS
DATE NOVEMBER 2022

** ORIGINAL SEALED BY KWASI DUOSE 06-10-22 TX PE 100650 **

carollo®
TBPELS No. F-882

CITY OF AUSTIN
FOUNDED 1839

CITY OF AUSTIN

CITY OF AUSTIN
WILD HORSE RANCH WWTP EXPANSION
STRUCTURAL
HEADWORKS
SECTIONS AND DETAILS 8

VERIFY SCALES
BAR IS ONE INCH ON ORIGINAL DRAWING
0 1"
IF NOT ONE INCH ON THIS SHEET, ADJUST SCALES ACCORDINGLY

JOB NO. 10976A.00
DRAWING NO. 20S13
SHEET NO. 334 OF 464

PROJECT NO. 10976A10 FILE NAME: 10976A1020S013.dgn

Plot Date: 10-OCT-2022 12:46:13 PM
User: LDietzel
PlotScale: 1:1
DesignScript: Carollo_Std_Pen_v0905.pen
ColorTable: gshade.ctb
Model: Layout1
LAST SAVED BY: jhill

Plot Date: 10-OCT-2022 12:47:47 PM
User: LDietzel
PlotScale: 1:1
DesignScript: Carollo_Std_Pen_v0905.pen
ColorTable: gshade.ctb
Model: Layout1
LAST SAVED BY: jhill

GENERAL NOTES:

1. FOR GENERAL STRUCTURAL NOTES SEE DWG 00GS01.
2. LIVE LOAD = 100 PSF.
3. FOR COATINGS SEE SPECIFICATION SECTION 09960.
4. FOR ALL OPENINGS IN CONCRETE SLABS OR WALLS SEE S180/TYP.
5. VERIFY COORDINATES WITH CIVIL DRAWINGS.

(#) KEY NOTES:

1. LAP TOP REINFORCING BETWEEN COLUMN SUPPORTS AND LAP BOTTOM REINFORCING AT COLUMN SUPPORTS.

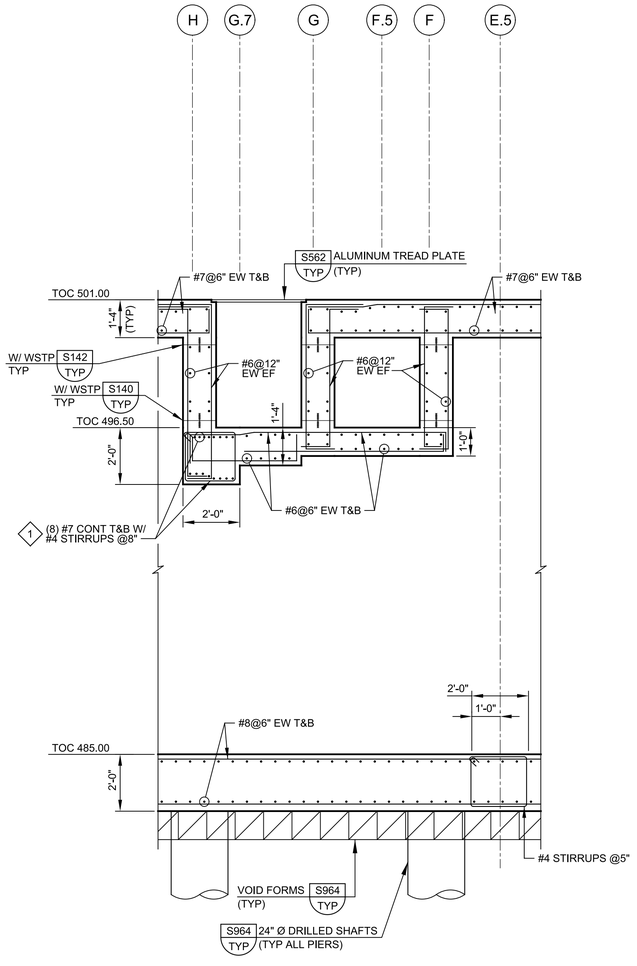

Q SECTION
20S01
SCALE: 3/8" = 1'-0"
FILE: 10976A1020S312

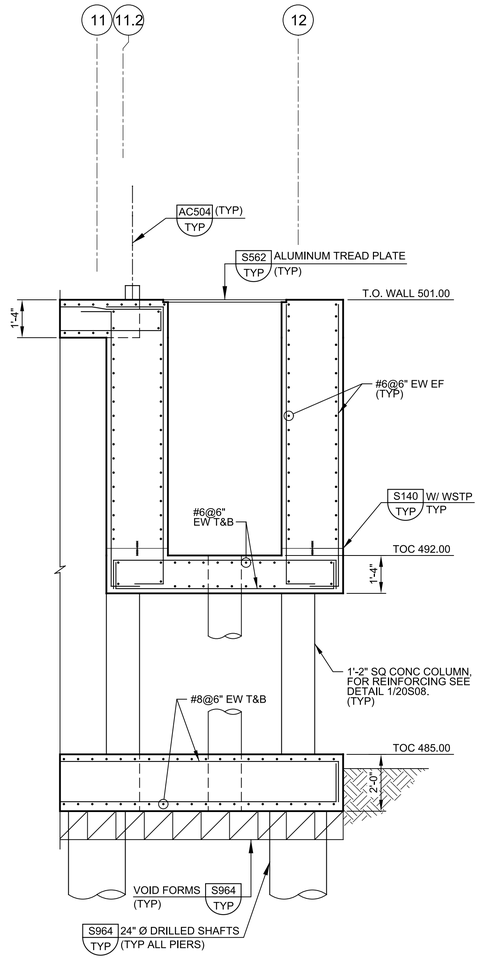

R SECTION
20S01
SCALE: 3/8" = 1'-0"
FILE: 10976A1020S313

THIS CONFORMED DOCUMENT IS RELEASED FOR THE CONVENIENCE OF THE CONTRACTOR UNDER THE AUTHORITY OF:

DANNY M HURTADO, P.E.
TX LIC NO. 104266

11-01-22
DATE

SEE DISCLAIMER FOR LIMITATIONS OF USE.

CONTRACT DOCUMENTS DATED JUNE 10, 2022, AS PART OF THE BIDDING DOCUMENTS (DRAWINGS AND SPECIFICATIONS) AND SUBSEQUENTLY ISSUED ADDENDA HAVE BEEN MERGED INTO ONE CONFORMING SET OF DOCUMENTS FOR THE CONVENIENCE OF THE CONTRACTOR. IF INCONSISTENCIES OR AMBIGUITIES BETWEEN "CONFORMED" DOCUMENTS AND CONTRACT DOCUMENTS ARE FOUND, THE CONTRACT DOCUMENTS SHALL GOVERN.

REV	DATE	BY	DESCRIPTION
			CONFORMED DOCUMENTS

DESIGNED KMD
DRAWN JLH
CHECKED JDS
DATE NOVEMBER 2022

** ORIGINAL SEALED BY KWASI DUOSE 06-10-22 TX PE 100650 **

carollo®
TBPELS No. F-882

CITY OF AUSTIN
POUNDED 1839

CITY OF AUSTIN

CITY OF AUSTIN
WILD HORSE RANCH WWTP EXPANSION
STRUCTURAL
HEADWORKS
SECTIONS AND DETAILS 9

VERIFY SCALES
BAR IS ONE INCH ON ORIGINAL DRAWING
0 1"
IF NOT ONE INCH ON THIS SHEET, ADJUST SCALES ACCORDINGLY

JOB NO. 10976A.00
DRAWING NO. 20S14
SHEET NO. 335 OF 464

Plot Date: 10-OCT-2022 12:49:21 PM
User: LDietzel
PlotScale: 1:1
DesignScript: Carollo_Std_Pen_v0905.pen
ColorTable: gshade.ctb
Model: Layout1
LAST SAVED BY: jhill

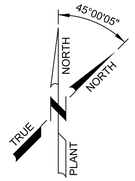

GENERAL NOTES:

1. FOR GENERAL STRUCTURAL NOTES SEE DRAWING NO. 00GS01.
2. LIVE LOAD = 250 PSF.
3. FOR ALL EQUIPMENT PAD SIZES AND LOCATIONS, SEE MECHANICAL DRAWINGS.
4. VERIFY COORDINATES WITH CIVIL DRAWINGS.

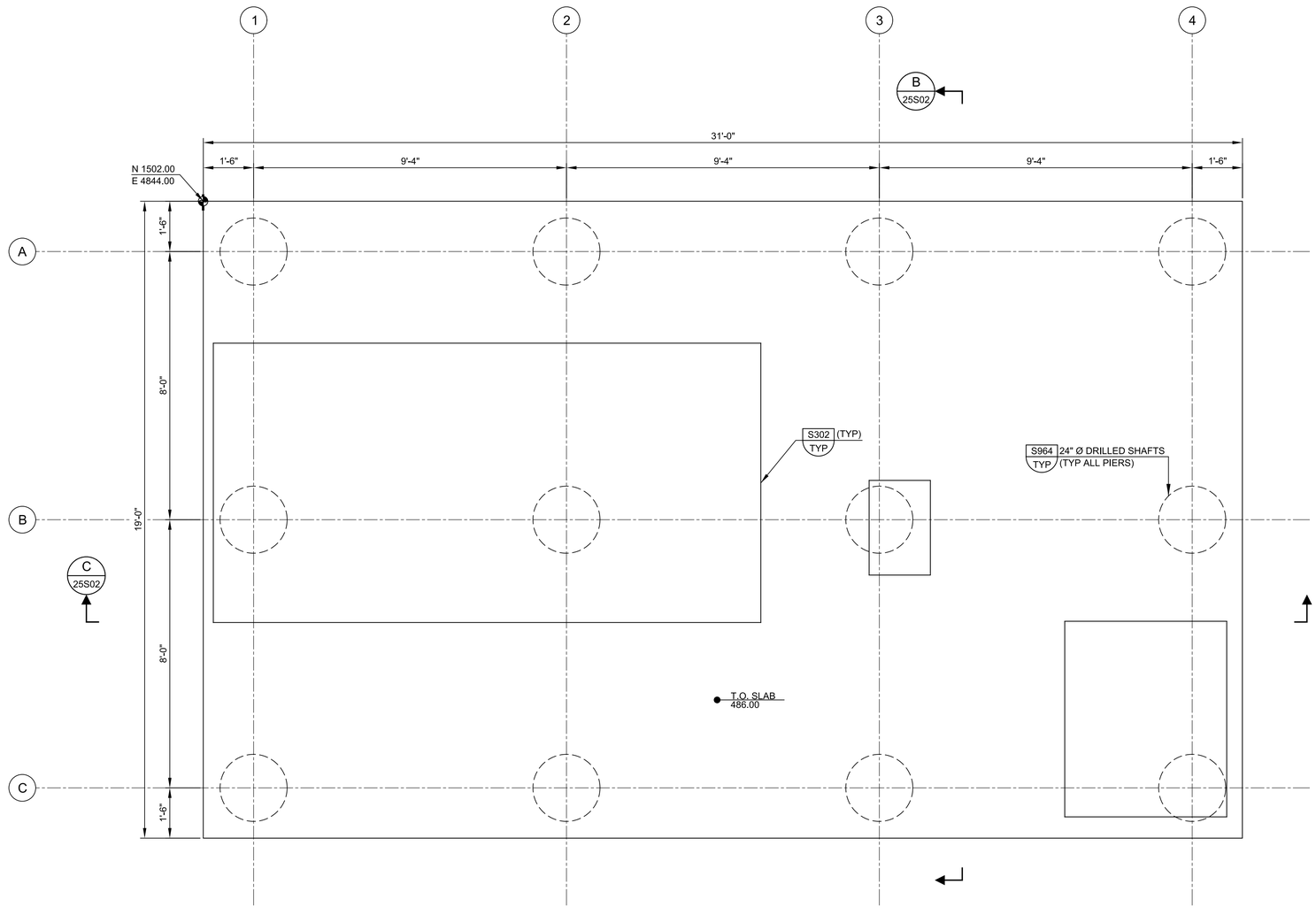

A FOUNDATION PLAN

SCALE: 1/2" = 1'-0"
FILE: 10976A1025S101

THIS CONFORMED DOCUMENT IS RELEASED FOR THE CONVENIENCE OF THE CONTRACTOR UNDER THE AUTHORITY OF:

DANNY M HURTADO, P.E.
TX LIC NO. 104266

11-01-22
DATE

SEE DISCLAIMER FOR LIMITATIONS OF USE.

CONTRACT DOCUMENTS DATED JUNE 10, 2022, AS PART OF THE BIDDING DOCUMENTS (DRAWINGS AND SPECIFICATIONS) AND SUBSEQUENTLY ISSUED ADDENDA HAVE BEEN MERGED INTO ONE CONFORMING SET OF DOCUMENTS FOR THE CONVENIENCE OF THE CONTRACTOR. IF INCONSISTENCIES OR AMBIGUITIES BETWEEN "CONFORMED" DOCUMENTS AND CONTRACT DOCUMENTS ARE FOUND, THE CONTRACT DOCUMENTS SHALL GOVERN.

REV	DATE	BY	DESCRIPTION
			CONFORMED DOCUMENTS

DESIGNED KMD
DRAWN JLH
CHECKED JDS
DATE NOVEMBER 2022

**
ORIGINAL SEALED BY KWASI DUOSE
06-10-22
TX PE 100650
**

carollo®
TBPELS No. F-882

CITY OF AUSTIN
FOUNDED 1839

CITY OF AUSTIN

CITY OF AUSTIN
WILD HORSE RANCH WWTP EXPANSION
STRUCTURAL
HEADWORKS ODOR CONTROL
FOUNDATION PLAN

VERIFY SCALES
BAR IS ONE INCH ON ORIGINAL DRAWING
0 1"
IF NOT ONE INCH ON THIS SHEET, ADJUST SCALES ACCORDINGLY

JOB NO. 10976A.00
DRAWING NO. 25S01
SHEET NO. 336 OF 464

PROJECT NO. 10976A10 FILE NAME: 10976A1025S001.dgn

Plot Date: 10-OCT-2022 12:52:17 PM
User: LDietzel
ColorTable: gshade.ctb
DesignScript: Carollo_Std_Pen_v0905.pen
PlotScale: 1:1
LAST SAVED BY: jhill

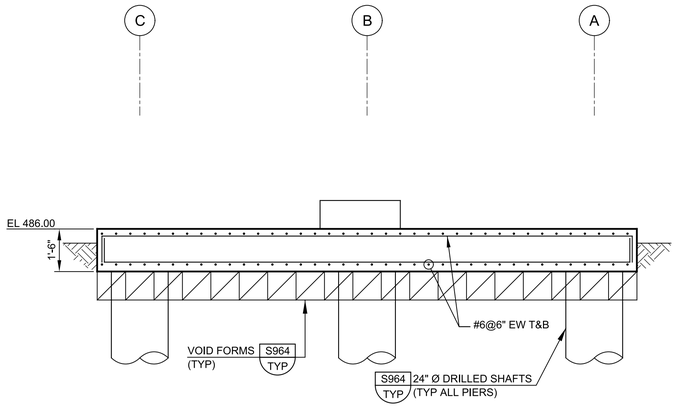

B SECTION
25S01
SCALE: 3/8" = 1'-0"
FILE: 10976A1025S301

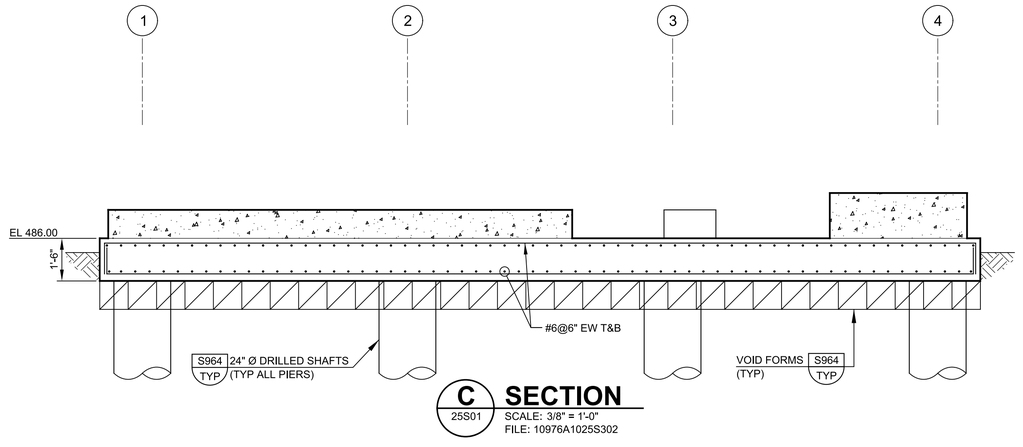

C SECTION
25S01
SCALE: 3/8" = 1'-0"
FILE: 10976A1025S302

GENERAL NOTES:

1. FOR GENERAL STRUCTURAL NOTES SEE DRAWING NO. 00GS01.
2. FOR ALL EQUIPMENT PAD SIZES AND LOCATIONS, SEE MECHANICAL DRAWINGS.
3. VERIFY COORDINATES WITH CIVIL DRAWINGS.

THIS CONFORMED DOCUMENT IS RELEASED FOR THE CONVENIENCE OF THE CONTRACTOR UNDER THE AUTHORITY OF:

DANNY M HURTADO, P.E.
TX LIC NO. 104266

11-01-22
DATE

SEE DISCLAIMER FOR LIMITATIONS OF USE.

CONTRACT DOCUMENTS DATED JUNE 10, 2022, AS PART OF THE BIDDING DOCUMENTS (DRAWINGS AND SPECIFICATIONS) AND SUBSEQUENTLY ISSUED ADDENDA HAVE BEEN MERGED INTO ONE CONFORMING SET OF DOCUMENTS FOR THE CONVENIENCE OF THE CONTRACTOR. IF INCONSISTENCIES OR AMBIGUITIES BETWEEN "CONFORMED" DOCUMENTS AND CONTRACT DOCUMENTS ARE FOUND, THE CONTRACT DOCUMENTS SHALL GOVERN.

REV	DATE	BY	DESCRIPTION
			CONFORMED DOCUMENTS

DESIGNED KMD
DRAWN JLH
CHECKED JDS
DATE NOVEMBER 2022

** ORIGINAL SEALED BY KWASI DUOSE 06-10-22 TX PE 100650 **

carollo®
TBPELS No. F-882

CITY OF AUSTIN
FOUNDED 1839
CITY OF AUSTIN

CITY OF AUSTIN
WILD HORSE RANCH WWTP EXPANSION
STRUCTURAL
HEADWORKS ODOR CONTROL SECTIONS AND DETAILS 1

VERIFY SCALES
BAR IS ONE INCH ON ORIGINAL DRAWING
0 1"
IF NOT ONE INCH ON THIS SHEET, ADJUST SCALES ACCORDINGLY

JOB NO. 10976A.00
DRAWING NO. 25S02
SHEET NO. 337 OF 464

PROJECT NO. 10976A10 FILE NAME: 10976A1025S002.dgn

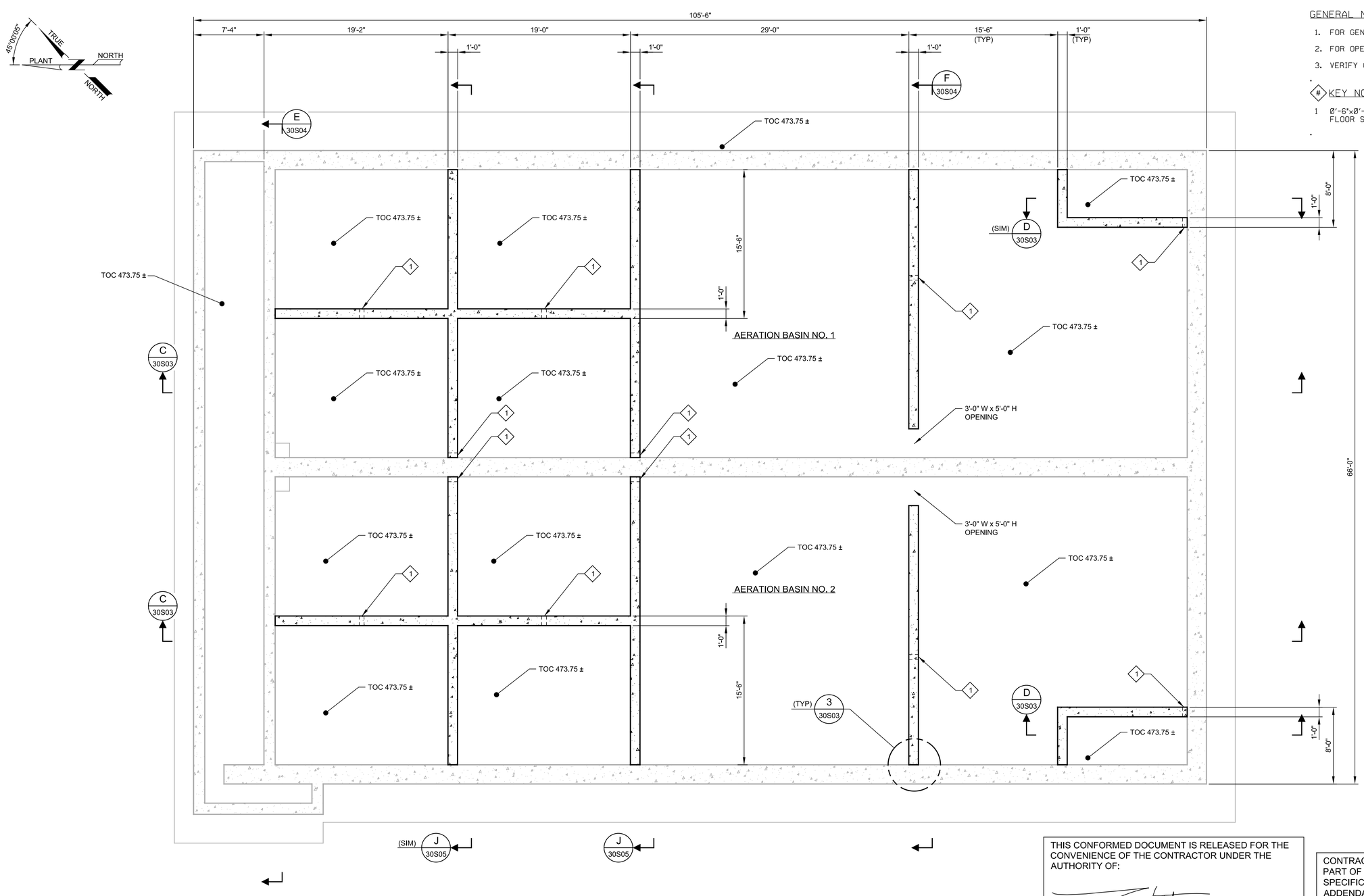

GENERAL NOTES:

1. FOR GENERAL STRUCTURAL NOTES SEE DRAWING 00GS01.
2. FOR OPENING IN CONCRETE SLABS OR WALLS SEE S180/TYP.
3. VERIFY COORDINATES WITH CIVIL DRAWINGS.

KEY NOTES:

1 0'-6"x0'-6" SQ OPENING IN BAFFLE WALL. INVERT = T.O. FLOOR SLAB

A LOWER PLAN

SCALE: 3/16" = 1'-0"
FILE: 10976A1030S101

THIS CONFORMED DOCUMENT IS RELEASED FOR THE CONVENIENCE OF THE CONTRACTOR UNDER THE AUTHORITY OF:

DANNY M HURTADO, P.E.
TX LIC NO. 104266

11-01-22
DATE

SEE DISCLAIMER FOR LIMITATIONS OF USE.

CONTRACT DOCUMENTS DATED JUNE 10, 2022, AS PART OF THE BIDDING DOCUMENTS (DRAWINGS AND SPECIFICATIONS) AND SUBSEQUENTLY ISSUED ADDENDA HAVE BEEN MERGED INTO ONE CONFORMING SET OF DOCUMENTS FOR THE CONVENIENCE OF THE CONTRACTOR. IF INCONSISTENCIES OR AMBIGUITIES BETWEEN "CONFORMED" DOCUMENTS AND CONTRACT DOCUMENTS ARE FOUND, THE CONTRACT DOCUMENTS SHALL GOVERN.

REV	DATE	BY	DESCRIPTION
			CONFORMED DOCUMENTS

DESIGNED AAC
DRAWN TJD
CHECKED JDS
DATE NOVEMBER 2022

** ORIGINAL SEALED BY KWASI DUOSE 06-10-22 TX PE 100650 **

carollo
TBPELS No. F-882

CITY OF AUSTIN
FOUNDED 1839
CITY OF AUSTIN

CITY OF AUSTIN
WILD HORSE RANCH WWTP EXPANSION
STRUCTURAL
EXISTING AERATION BASIN 1 & 2
LOWER PLAN

VERIFY SCALES
BAR IS ONE INCH ON ORIGINAL DRAWING
0 1"
IF NOT ONE INCH ON THIS SHEET, ADJUST SCALES ACCORDINGLY

JOB NO. 10976A.00
DRAWING NO. 30S01
SHEET NO. 338 OF 464

Plot Date: 10-OCT-2022 12:54:34 PM
User: LDietzel
PlotScale: 1:1
DesignScript: Carollo_Std_Pen_v0905.pen
ColorTable: gshade.ctb
Model: Layout1
LAST SAVED BY: jhill
PROJECT NO. 10976A10
FILE NAME: 10976A1030S001.dgn

Plot Date: 10-OCT-2022 12:56:19 PM
User: LDietzel
Model: Layout1 ColorTable: gshade.ctb DesignScript: Carollo_Std_Pen_v0905.pen PlotScale: 1:1
LAST SAVED BY: dentiquez

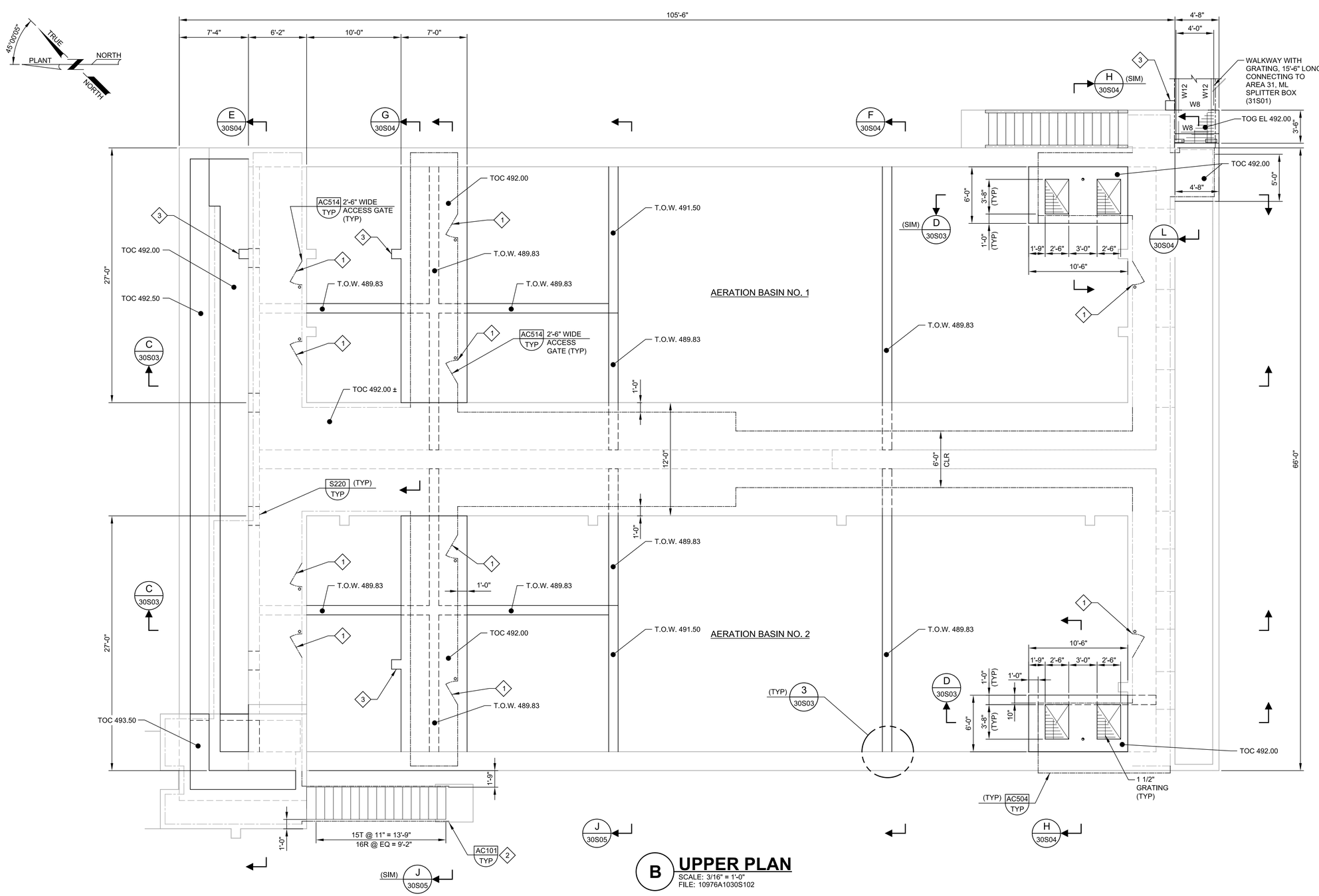

B UPPER PLAN

SCALE: 3/16" = 1'-0"
FILE: 10976A1030S102

GENERAL NOTES:

1. FOR GENERAL STRUCTURAL NOTES SEE DRAWING 00GS01.
2. WALKWAY BRIDGE LIVE LOAD = 100 PSF.
3. ALL STRUCTURAL MEMBERS, CONNECTIONS AND GRATING SHALL BE ALUMINUM AT WALKWAY BRIDGE.
4. FOR ALL OPENINGS IN CONCRETE SLABS OR WALLS SEE S180/TYP.
5. VERIFY COORDINATES WITH CIVIL DRAWINGS.

KEY NOTES:

1 ACCESS SWING GATE AS PART OF ALUMINUM HANDRAIL SHALL PROVIDE OPERATIONAL ACCESS TO AERATION BASIN FLOOR. DBI SALA FLUSH MOUNT DAVIT SLEEVE SHALL BE PROVIDED ADJACENT TO EACH ACCESS GATE. COORDINATE LOCATION WITH MECHANICAL DRAWINGS.

2 MODIFY DET AC101/TYP, TOP OF AL STAIRS TO CONCRETE SLAB SHALL BE 5/8" DIAMETER ANCHOR WITH HIT-HY 200R WITH 6" MIN EMBED CENTERED IN 8" SLAB (E.G. 4" EDGE DISTANCE).

3 CONCRETE CORBEL FOR LIGHTING ATTACHED TO WALKWAY, SEE S973/TYP. SEE ELECTRICAL DRAWINGS FOR LOCATION.

THIS CONFORMED DOCUMENT IS RELEASED FOR THE CONVENIENCE OF THE CONTRACTOR UNDER THE AUTHORITY OF:

DANNY M HURTADO, P.E.
TX LIC NO. 104266
11-01-22
DATE

SEE DISCLAIMER FOR LIMITATIONS OF USE.

CONTRACT DOCUMENTS DATED JUNE 10, 2022, AS PART OF THE BIDDING DOCUMENTS (DRAWINGS AND SPECIFICATIONS) AND SUBSEQUENTLY ISSUED ADDENDA HAVE BEEN MERGED INTO ONE CONFORMING SET OF DOCUMENTS FOR THE CONVENIENCE OF THE CONTRACTOR. IF INCONSISTENCIES OR AMBIGUITIES BETWEEN "CONFORMED" DOCUMENTS AND CONTRACT DOCUMENTS ARE FOUND, THE CONTRACT DOCUMENTS SHALL GOVERN.

CONFORMED DOCUMENTS

REV	DATE	BY	DESCRIPTION

DESIGNED AAC
DRAWN TJD
CHECKED JDS
DATE NOVEMBER 2022

** ORIGINAL SEALED BY KWASI DUOSE 06-10-22 TX PE 100650 **

carollo®
TBPELS No. F-882

CITY OF AUSTIN
FOUNDED 1839
CITY OF AUSTIN

CITY OF AUSTIN
WILD HORSE RANCH WWTP EXPANSION
STRUCTURAL
EXISTING AERATION BASIN 1 & 2
UPPER PLAN

VERIFY SCALES
BAR IS ONE INCH ON ORIGINAL DRAWING
0 1"
IF NOT ONE INCH ON THIS SHEET, ADJUST SCALES ACCORDINGLY

JOB NO. 10976A.00
DRAWING NO. 30S02
SHEET NO. 339 OF 464

PROJECT NO. 10976A10 FILE NAME: 10976A1030S002.dgn

Plot Date: 10-OCT-2022 12:58:00 PM
User: LDietzel
Model: Layout1 ColorTable: gshade.ctb DesignScript: Carollo_Std_Pen_v0905.pen PlotScale: 1:1
LAST SAVED BY: denriquez

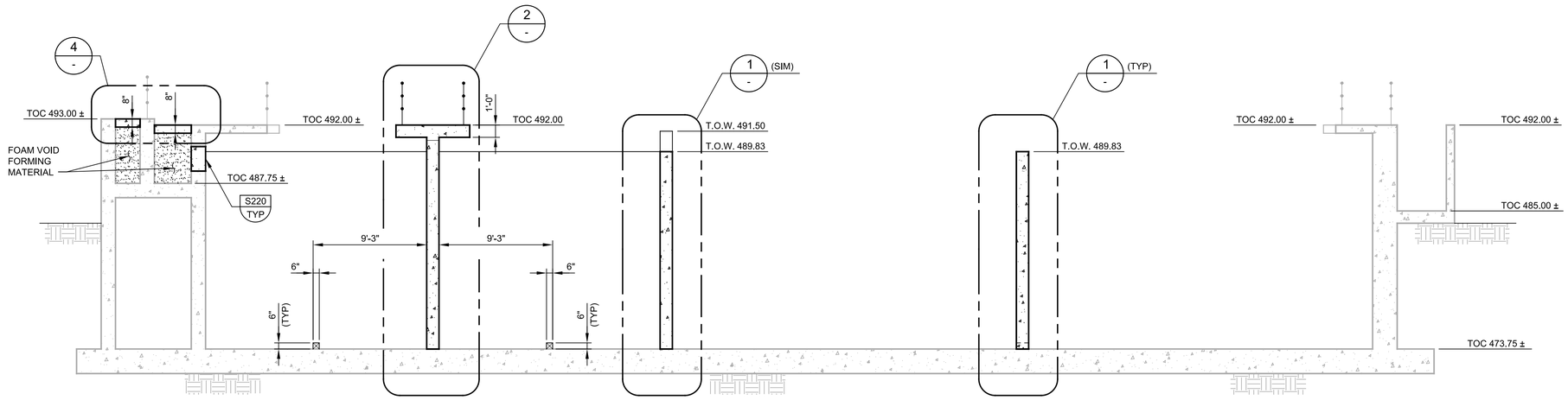

C SECTION
30S01
SCALE: 3/16" = 1'-0"
FILE: 10976A1030S301

GENERAL NOTES:

1. FOR GENERAL STRUCTURAL NOTES SEE DRAWING 00GS01.
2. FOR ALL OPENINGS IN CONCRETE SLABS OR WALLS SEE S180/TYP.
3. VERIFY COORDINATES WITH CIVIL DRAWINGS.

KEY NOTES:

1 ROUGHEN JOINT TO 1/4" AMPLITUDE AND COAT WITH EPOXY CEMENT BONDING AGENT.

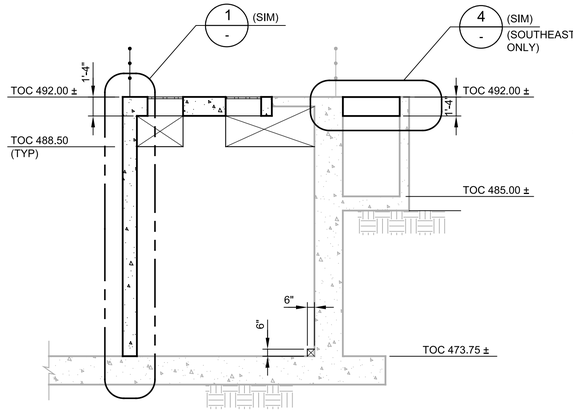

D SECTION
30S01
SCALE: 3/16" = 1'-0"
FILE: 10976A1030S303

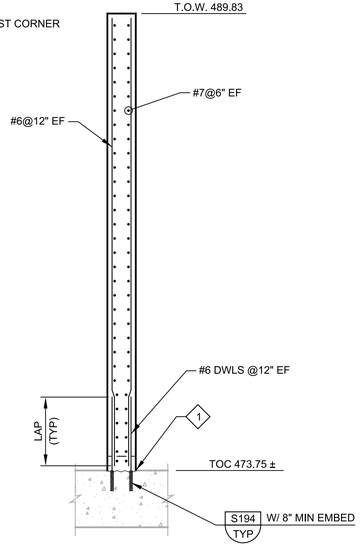

1 DETAIL
-
SCALE: 3/8" = 1'-0"
FILE: 10976A1030S301

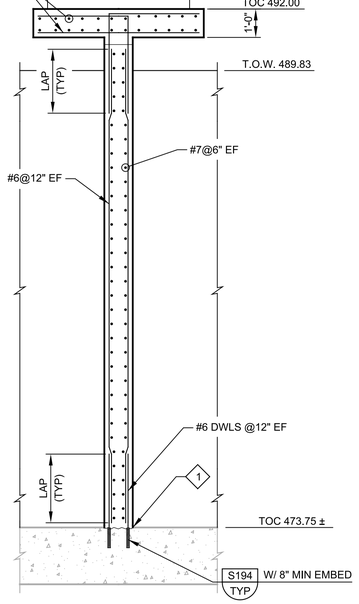

2 DETAIL
-
SCALE: 3/8" = 1'-0"
FILE: 10976A1030S301

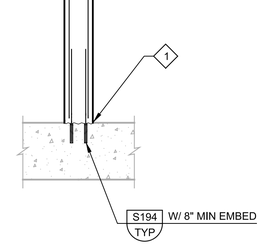

3 DETAIL
30S01
SCALE: 3/8" = 1'-0"
FILE: 10976A1030S101

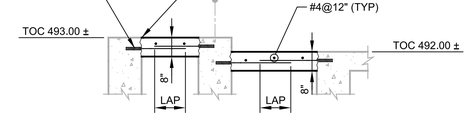

4 DETAIL
-
SCALE: 3/8" = 1'-0"
FILE: 10976A1030S301

THIS CONFORMED DOCUMENT IS RELEASED FOR THE CONVENIENCE OF THE CONTRACTOR UNDER THE AUTHORITY OF:

11-01-22
DANNY M HURTADO, P.E. DATE
TX LIC NO. 104266

SEE DISCLAIMER FOR LIMITATIONS OF USE.

CONTRACT DOCUMENTS DATED JUNE 10, 2022, AS PART OF THE BIDDING DOCUMENTS (DRAWINGS AND SPECIFICATIONS) AND SUBSEQUENTLY ISSUED ADDENDA HAVE BEEN MERGED INTO ONE CONFORMING SET OF DOCUMENTS FOR THE CONVENIENCE OF THE CONTRACTOR. IF INCONSISTENCIES OR AMBIGUITIES BETWEEN "CONFORMED" DOCUMENTS AND CONTRACT DOCUMENTS ARE FOUND, THE CONTRACT DOCUMENTS SHALL GOVERN.

REV	DATE	BY	DESCRIPTION
			CONFORMED DOCUMENTS

DESIGNED AAC
DRAWN TJD
CHECKED JDS
DATE NOVEMBER 2022

** ORIGINAL SEALED BY KWASI DUOSE 06-10-22 TX PE 100650 **

carollo®
TBPELS No. F-882

CITY OF AUSTIN
FOUNDED 1839

CITY OF AUSTIN

CITY OF AUSTIN
WILD HORSE RANCH WWTP EXPANSION
STRUCTURAL
EXISTING AERATION BASIN 1 & 2 SECTIONS AND DETAILS 1

VERIFY SCALES
BAR IS ONE INCH ON ORIGINAL DRAWING
0 1"
IF NOT ONE INCH ON THIS SHEET, ADJUST SCALES ACCORDINGLY

JOB NO. 10976A.00
DRAWING NO. 30S03
SHEET NO. 340 OF 464

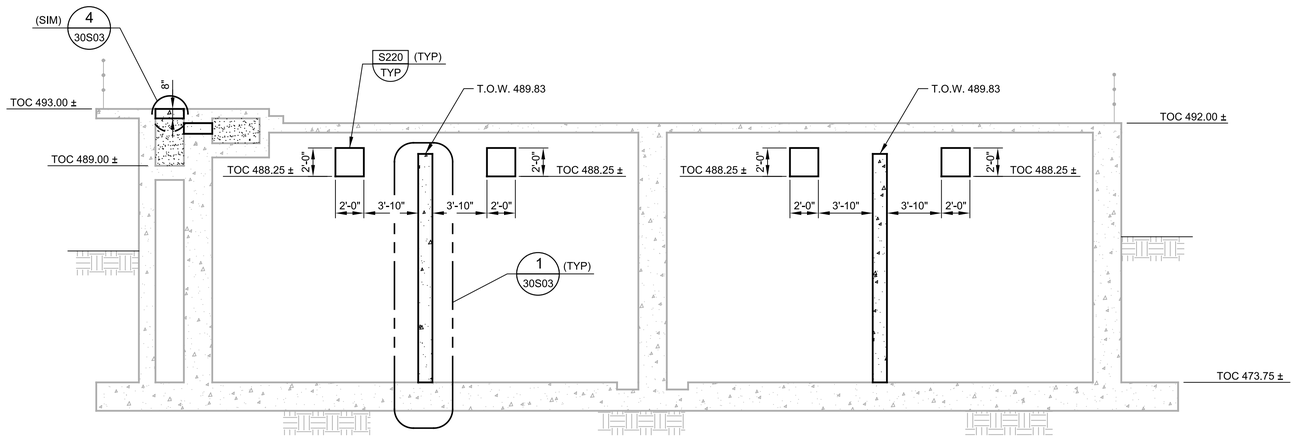

E SECTION (30S01)
SCALE: 3/16" = 1'-0"
FILE: 10976A1030S302

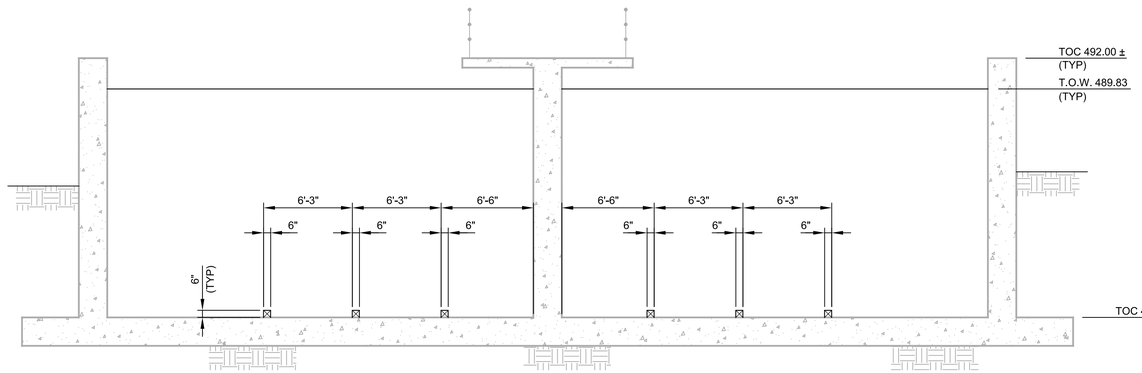

F SECTION (30S01)
SCALE: 3/16" = 1'-0"
FILE: 10976A1030S304

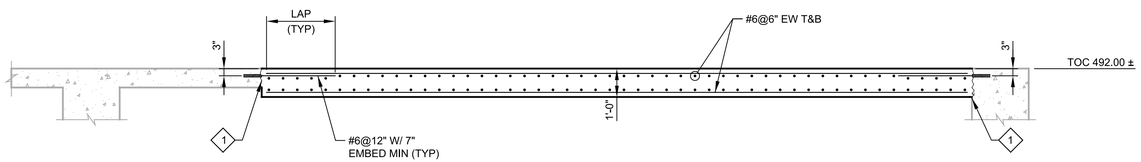

G SECTION (30S02)
SCALE: 3/8" = 1'-0"
FILE: 10976A1030S305

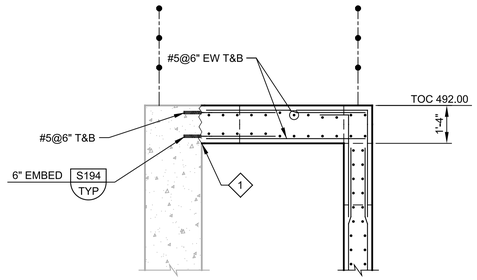

H SECTION (30S02)
SCALE: 3/8" = 1'-0"
FILE: 10976A1030S306

GENERAL NOTES:

1. FOR GENERAL STRUCTURAL NOTES SEE DRAWING 00GS01.
2. FOR ALL OPENINGS IN CONCRETE SLABS OR WALLS SEE S180/TYP.
3. VERIFY COORDINATES WITH CIVIL DRAWINGS.

KEY NOTES:

1 ROUGHEN JOINT TO 1/4" AMPLITUDE AND COAT WITH EPOXY CEMENT BONDING AGENT.

THIS CONFORMED DOCUMENT IS RELEASED FOR THE CONVENIENCE OF THE CONTRACTOR UNDER THE AUTHORITY OF:

11-01-22
DANNY M HURTADO, P.E. DATE
TX LIC NO. 104266

SEE DISCLAIMER FOR LIMITATIONS OF USE.

CONTRACT DOCUMENTS DATED JUNE 10, 2022, AS PART OF THE BIDDING DOCUMENTS (DRAWINGS AND SPECIFICATIONS) AND SUBSEQUENTLY ISSUED ADDENDA HAVE BEEN MERGED INTO ONE CONFORMING SET OF DOCUMENTS FOR THE CONVENIENCE OF THE CONTRACTOR. IF INCONSISTENCIES OR AMBIGUITIES BETWEEN "CONFORMED" DOCUMENTS AND CONTRACT DOCUMENTS ARE FOUND, THE CONTRACT DOCUMENTS SHALL GOVERN.

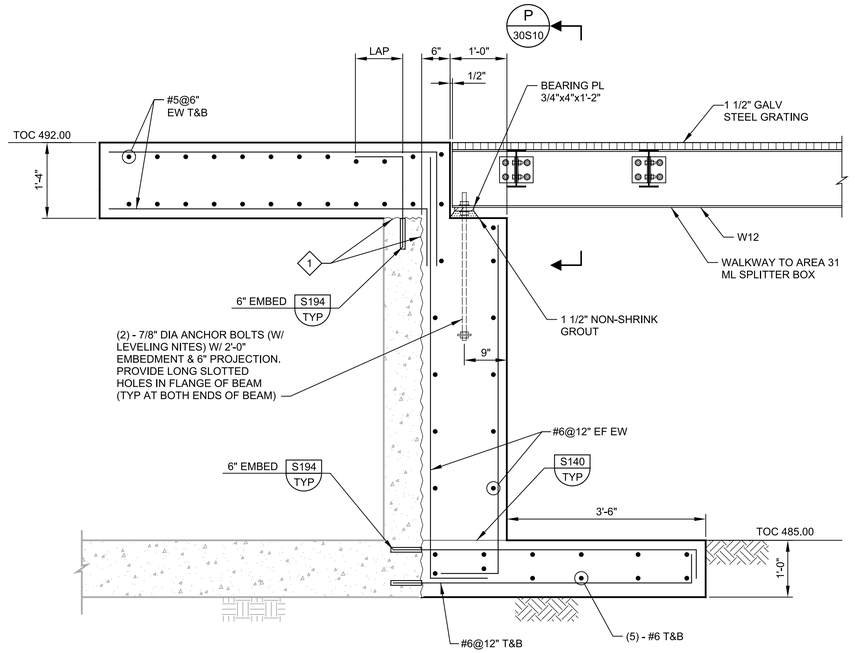

L SECTION (30S02)
SCALE: 3/8" = 1'-0"
FILE: 10976A1030S308

REV	DATE	BY	DESCRIPTION
			CONFORMED DOCUMENTS

DESIGNED AAC
DRAWN TJD
CHECKED JDS
DATE NOVEMBER 2022

** ORIGINAL SEALED BY KWASI DUOSE 06-10-22 TX PE 100650 **

carollo® TBPELS No. F-882

CITY OF AUSTIN FOUNDED 1839 **CITY OF AUSTIN**

CITY OF AUSTIN
WILD HORSE RANCH WWTP EXPANSION
STRUCTURAL
EXISTING AERATION BASIN 1 & 2 SECTIONS AND DETAILS 2

VERIFY SCALES
BAR IS ONE INCH ON ORIGINAL DRAWING
0 1"
IF NOT ONE INCH ON THIS SHEET, ADJUST SCALES ACCORDINGLY

JOB NO. 10976A.00
DRAWING NO. 30S04
SHEET NO. 341 OF 464

PROJECT NO. 10976A10 FILE NAME: 10976A1030S004.dgn

Plot Date: 10-OCT-2022 1:01:27 PM
User: LDietzel
PlotScale: 1:1
DesignScript: Carollo_Std_Pen_v0905.pen
ColorTable: gshade.ctb
Model: Layout1
LAST SAVED BY: jhill

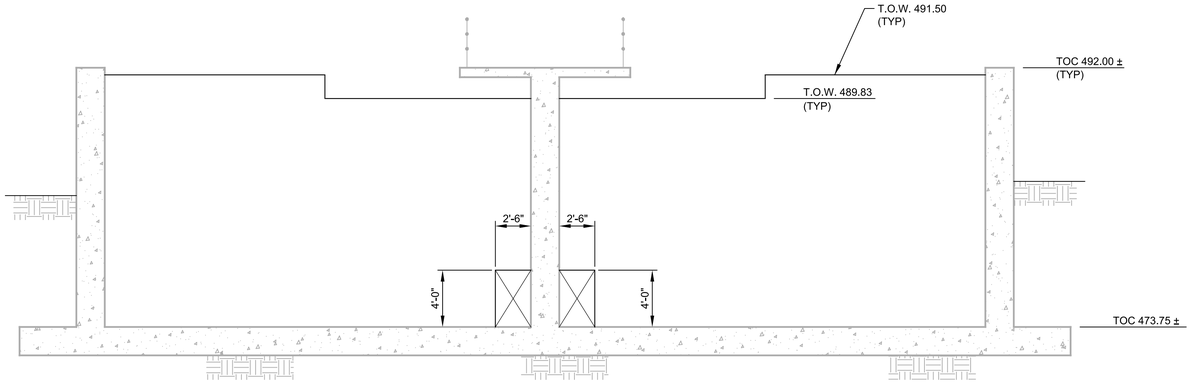

J SECTION
30S01
SCALE: 3/16" = 1'-0"
FILE: 10976A1030S307

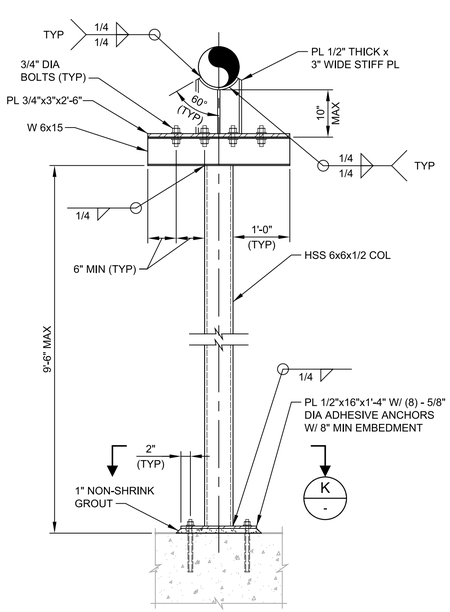

NOTES:
1. PIPE SUPPORT SHALL BE AS INDICATED ON DRAWINGS.
2. IF PIPE SUPPORT IS SUBMERGED OR BELOW THE TOP OF WALL IN WATER BEARING STRUCTURES, MATERIAL FOR ANCHOR BOLTS, BOLTS, PIPE STRAP, STRUCTURAL STEEL AND ALL CONNECTIONS AND MATERIALS SHOWN SHALL BE STAINLESS STEEL. IN ALL OTHER AREAS, MATERIAL SHALL BE HOT-DIP GALVANIZED STEEL UNLESS OTHERWISE INDICATED ON THE DRAWINGS.
3. PIPE SADDLE SHALL BE WELDED CONSTRUCTION.

5 DETAIL - FIXED PIPE SUPPORT
SCALE: 3/4" = 1'-0"
FILE: 10976A1030S401

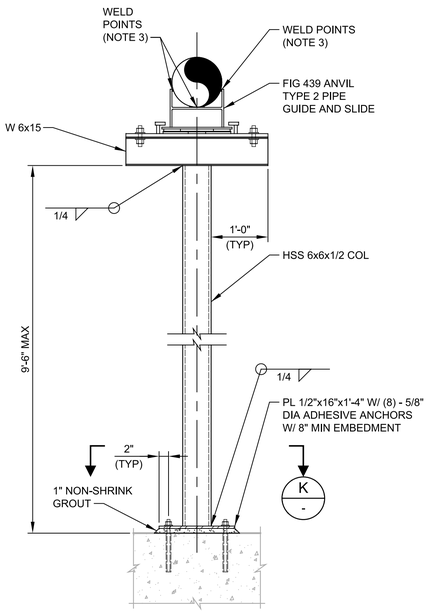

NOTES:
1. PIPE SUPPORT SHALL BE AS INDICATED ON DRAWINGS.
2. IF PIPE SUPPORT IS SUBMERGED OR BELOW THE TOP OF WALL IN WATER BEARING STRUCTURES, MATERIAL FOR ANCHOR BOLTS, BOLTS, PIPE STRAP, STRUCTURAL STEEL AND ALL CONNECTIONS AND MATERIALS SHOWN SHALL BE STAINLESS STEEL. IN ALL OTHER AREAS, MATERIAL SHALL BE HOT-DIP GALVANIZED STEEL UNLESS OTHERWISE INDICATED ON THE DRAWINGS.
3. PROVIDE WELD POINTS NOT TO EXCEED THE MINIMUM OF PIPE THICKNESS MINUS 1/16" OR FIG 439 ANVIL MINUS 1/16"

6 DETAIL - ROLLER PIPE SUPPORT
SCALE: 3/4" = 1'-0"
FILE: 10976A1030S401

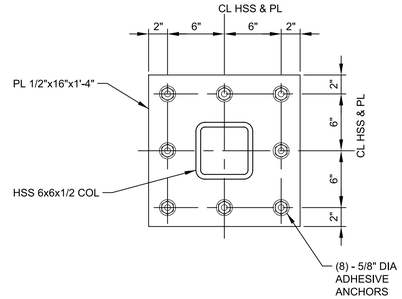

K SECTION
SCALE: 1 1/2" = 1'-0"
FILE: 10976A1030S401

GENERAL NOTES:
1. FOR GENERAL STRUCTURAL NOTES SEE DRAWING 00GS01.
2. ALL OPENINGS IN CONCRETE SLABS OR WALLS SEE S180/TYP.
3. VERIFY COORDINATES WITH CIVIL DRAWINGS.

THIS CONFORMED DOCUMENT IS RELEASED FOR THE CONVENIENCE OF THE CONTRACTOR UNDER THE AUTHORITY OF:

11-01-22
DANNY M HURTADO, P.E. DATE
TX LIC NO. 104266

SEE DISCLAIMER FOR LIMITATIONS OF USE.

CONTRACT DOCUMENTS DATED JUNE 10, 2022, AS PART OF THE BIDDING DOCUMENTS (DRAWINGS AND SPECIFICATIONS) AND SUBSEQUENTLY ISSUED ADDENDA HAVE BEEN MERGED INTO ONE CONFORMING SET OF DOCUMENTS FOR THE CONVENIENCE OF THE CONTRACTOR. IF INCONSISTENCIES OR AMBIGUITIES BETWEEN "CONFORMED" DOCUMENTS AND CONTRACT DOCUMENTS ARE FOUND, THE CONTRACT DOCUMENTS SHALL GOVERN.

REV	DATE	BY	DESCRIPTION
			CONFORMED DOCUMENTS

DESIGNED AAC
DRAWN TJD
CHECKED JDS
DATE NOVEMBER 2022

** ORIGINAL SEALED BY KWASI DUOSE 06-10-22 TX PE 100650 **

carollo®
TBPELS No. F-882

CITY OF AUSTIN
FOUNDED 1839
CITY OF AUSTIN

CITY OF AUSTIN
WILD HORSE RANCH WWTP EXPANSION
STRUCTURAL
EXISTING AERATION BASIN 1 & 2
SECTIONS AND DETAILS 3

VERIFY SCALES
BAR IS ONE INCH ON ORIGINAL DRAWING
0 1"
IF NOT ONE INCH ON THIS SHEET, ADJUST SCALES ACCORDINGLY

JOB NO. 10976A.00
DRAWING NO. 30S05
SHEET NO. 342 OF 464

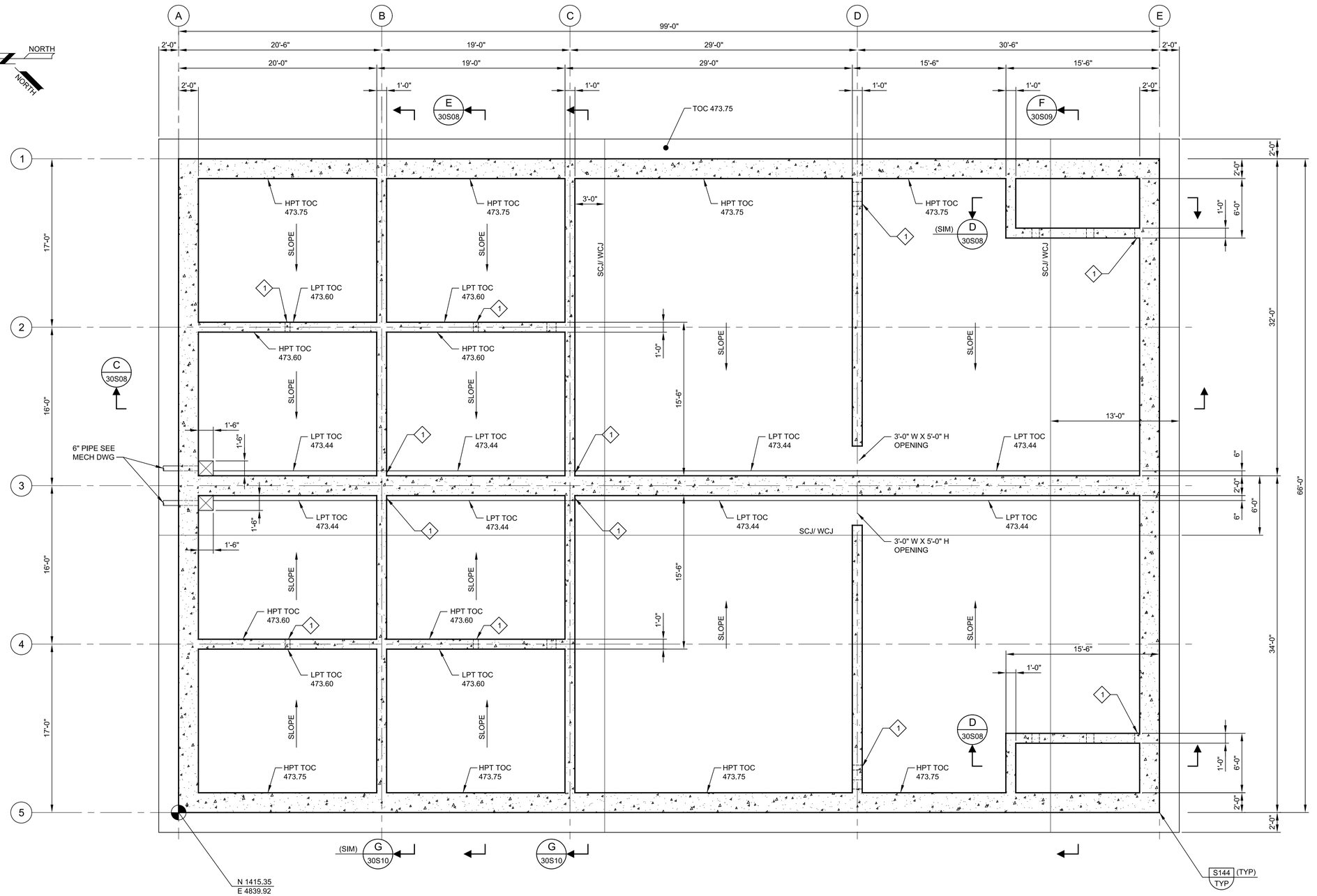

A LOWER PLAN

SCALE: 3/16" = 1'-0"
FILE: 10976A1030S111

GENERAL NOTES:

1. FOR GENERAL STRUCTURAL NOTES SEE DRAWING 00GS01.
2. CONTRACTOR SHALL PROVIDE CONSTRUCTION JOINTS IN SLABS AND WALLS PER SPECIFICATION SECTION SP403S AND SUBMIT PROPOSED JOINT LAYOUT FOR ENGINEER'S REVIEW.
3. SCJ = SLAB CONSTRUCTION JOINT PER DETAIL S110/TYP.
   WCJ = WALL CONSTRUCTION JOINT PER DETAIL S110/TYP.
4. SEE MECHANICAL DRAWING FOR PIPES SIZES AND LOCATION.
5. NOT ALL STRUCTURAL PENETRATIONS SHOWN OR DIMENSIONED. COORDINATE PENETRATIONS WITH MECHANICAL AND ELECTRICAL DRAWINGS. REINFORCE PENETRATIONS AT CONCRETE PER DETAIL S180/TYP UNLESS OTHERWISE NOTED.
6. VERIFY COORDINATES WITH CIVIL DRAWINGS.

KEY NOTES:

1 Ø'-6"xØ'-6" SQ OPENING IN BAFFLE WALL. INVERT = T.O. FLOOR SLAB.

THIS CONFORMED DOCUMENT IS RELEASED FOR THE CONVENIENCE OF THE CONTRACTOR UNDER THE AUTHORITY OF:

11-01-22
DANNY M HURTADO, P.E. DATE
TX LIC NO. 104266

SEE DISCLAIMER FOR LIMITATIONS OF USE.

CONTRACT DOCUMENTS DATED JUNE 10, 2022, AS PART OF THE BIDDING DOCUMENTS (DRAWINGS AND SPECIFICATIONS) AND SUBSEQUENTLY ISSUED ADDENDA HAVE BEEN MERGED INTO ONE CONFORMING SET OF DOCUMENTS FOR THE CONVENIENCE OF THE CONTRACTOR. IF INCONSISTENCIES OR AMBIGUITIES BETWEEN "CONFORMED" DOCUMENTS AND CONTRACT DOCUMENTS ARE FOUND, THE CONTRACT DOCUMENTS SHALL GOVERN.

CONFORMED DOCUMENTS

REV	DATE	BY	DESCRIPTION

DESIGNED KD
DRAWN TJD
CHECKED JDS
DATE NOVEMBER 2022

** ORIGINAL SEALED BY KWASI DUOSE 06-10-22 TX PE 100650 **

carollo®
TBPELS No. F-882

CITY OF AUSTIN
FOUNDED 1839
CITY OF AUSTIN

CITY OF AUSTIN
WILD HORSE RANCH WWTP EXPANSION
STRUCTURAL
AERATION BASIN 3 & 4
LOWER PLAN

VERIFY SCALES
BAR IS ONE INCH ON ORIGINAL DRAWING
0 1"
IF NOT ONE INCH ON THIS SHEET, ADJUST SCALES ACCORDINGLY

JOB NO. 10976A.00
DRAWING NO. 30S06
SHEET NO. 343 OF 464

PROJECT NO. 10976A10 FILE NAME: 10976A1030S006.dgn

Plot Date: 10-OCT-2022 1:03:10 PM
User: LDietzel
PlotScale: 1:1
DesignScript: Carollo_Std_Pen_v0905.pen
ColorTable: gshade.ctb
Model: Layout1
LAST SAVED BY: jhill

Plot Date: 10-OCT-2022 1:04:55 PM
User: LDietzel
Model: Layout1 ColorTable: gshade.ctb DesignScript: Carollo_Std_Pen_v0905.pen PlotScale: 1:1
LAST SAVED BY: dentiquez

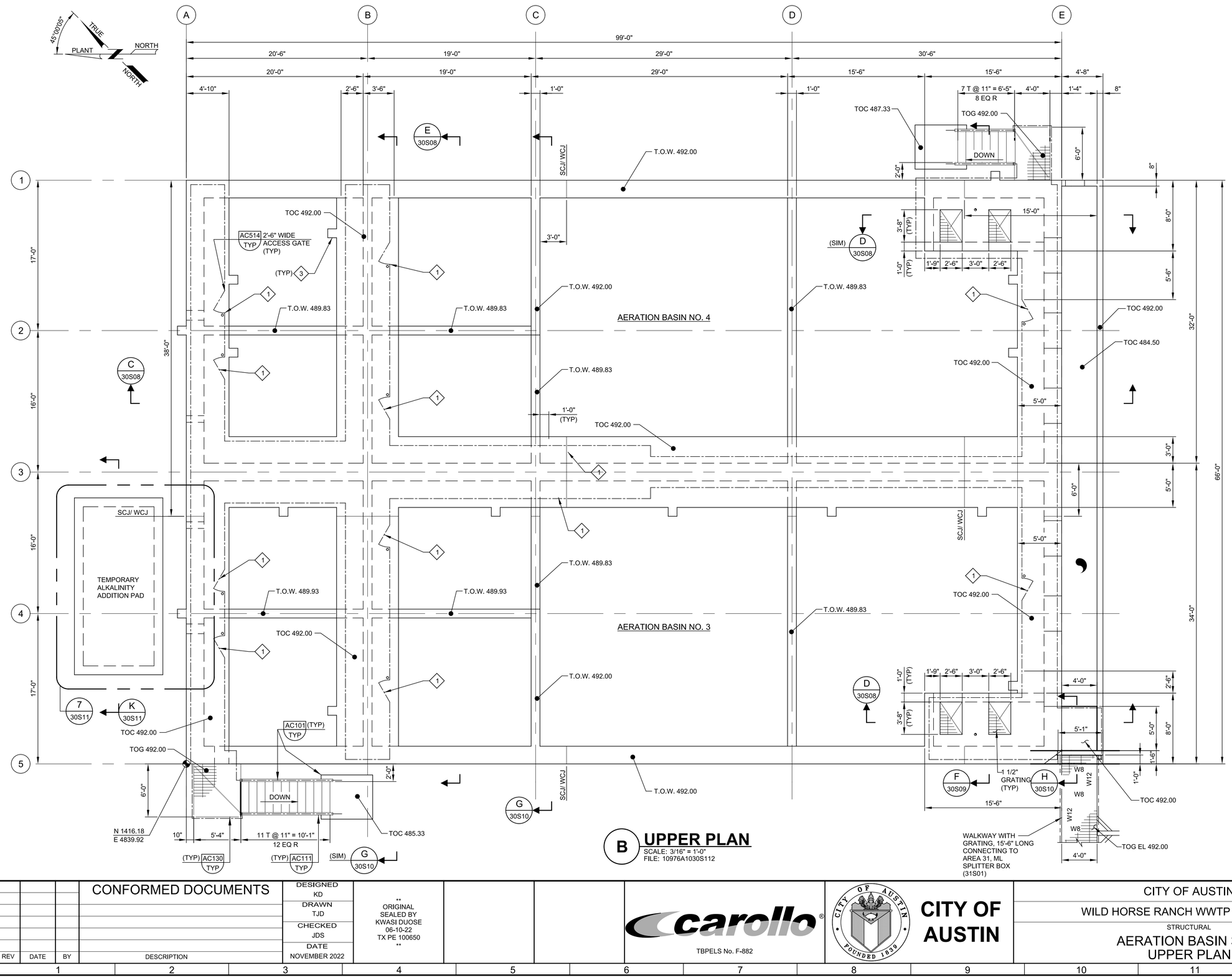

B UPPER PLAN

SCALE: 3/16" = 1'-0"
FILE: 10976A1030S112

GENERAL NOTES:

1. FOR GENERAL STRUCTURAL NOTES SEE DRAWING 00GS01.
2. SCJ = SLAB CONSTRUCTION JOINT PER DETAIL S110/TYP
   WCJ = WALL CONTRUCTION JOINT PER DETAIL S110/TYP.
3. WALKWAY BRIDGE LIVE LOAD = 100 PSF.
4. ALL STRUCTURAL MEMBERS, CONNECTIONS AND GRATING SHALL BE HOT-DIPPED GALVANIZED AT WALKWAY BRIDGE.
5. FOR OPENINGS IN CONCRETE SLABS OR WALLS SEE S180/TYP.
6. VERIFY COORDINATES WITH CIVIL DRAWINGS.

KEY NOTES:

1 ACCESS SWING GATE AS PART OF ALUMINUM HANDRAIL SHALL PROVIDE OPERATIONAL ACCESS TO AERATION BASIN FLOOR. DBI SALA FLUSH MOUNT DAVIT SLEEVE SHALL BE PROVIDED ADJACENT TO EACH ACCESS GATE. COORDINATE LOCATION WITH MECHANICAL DRAWINGS.

2 PROVIDE EXPANSION JOINT PER DET S130/TYP IN SLAB.

3 CONCRETE CORBEL ATTACHED TO WALKWAY, SEE S973/TYP. SEE ELECTRICAL DRAWINGS FOR LOCATION.

THIS CONFORMED DOCUMENT IS RELEASED FOR THE CONVENIENCE OF THE CONTRACTOR UNDER THE AUTHORITY OF:

DANNY M HURTADO, P.E. 11-01-22
TX LIC NO. 104266 DATE

SEE DISCLAIMER FOR LIMITATIONS OF USE.

CONTRACT DOCUMENTS DATED JUNE 10, 2022, AS PART OF THE BIDDING DOCUMENTS (DRAWINGS AND SPECIFICATIONS) AND SUBSEQUENTLY ISSUED ADDENDA HAVE BEEN MERGED INTO ONE CONFORMING SET OF DOCUMENTS FOR THE CONVENIENCE OF THE CONTRACTOR. IF INCONSISTENCIES OR AMBIGUITIES BETWEEN "CONFORMED" DOCUMENTS AND CONTRACT DOCUMENTS ARE FOUND, THE CONTRACT DOCUMENTS SHALL GOVERN.

REV	DATE	BY	DESCRIPTION
			CONFORMED DOCUMENTS

DESIGNED KD
DRAWN TJD
CHECKED JDS
DATE NOVEMBER 2022

** ORIGINAL SEALED BY KWASI DUOSE 06-10-22 TX PE 100650 **

carollo®
TBPELS No. F-882

CITY OF AUSTIN
FOUNDED 1839
CITY OF AUSTIN

CITY OF AUSTIN
WILD HORSE RANCH WWTP EXPANSION
STRUCTURAL
AERATION BASIN 3 & 4
UPPER PLAN

VERIFY SCALES
BAR IS ONE INCH ON ORIGINAL DRAWING
0 1"
IF NOT ONE INCH ON THIS SHEET, ADJUST SCALES ACCORDINGLY

JOB NO. 10976A.00
DRAWING NO. 30S07
SHEET NO. 344 OF 464

PROJECT NO. 10976A10 FILE NAME: 10976A1030S007.dgn

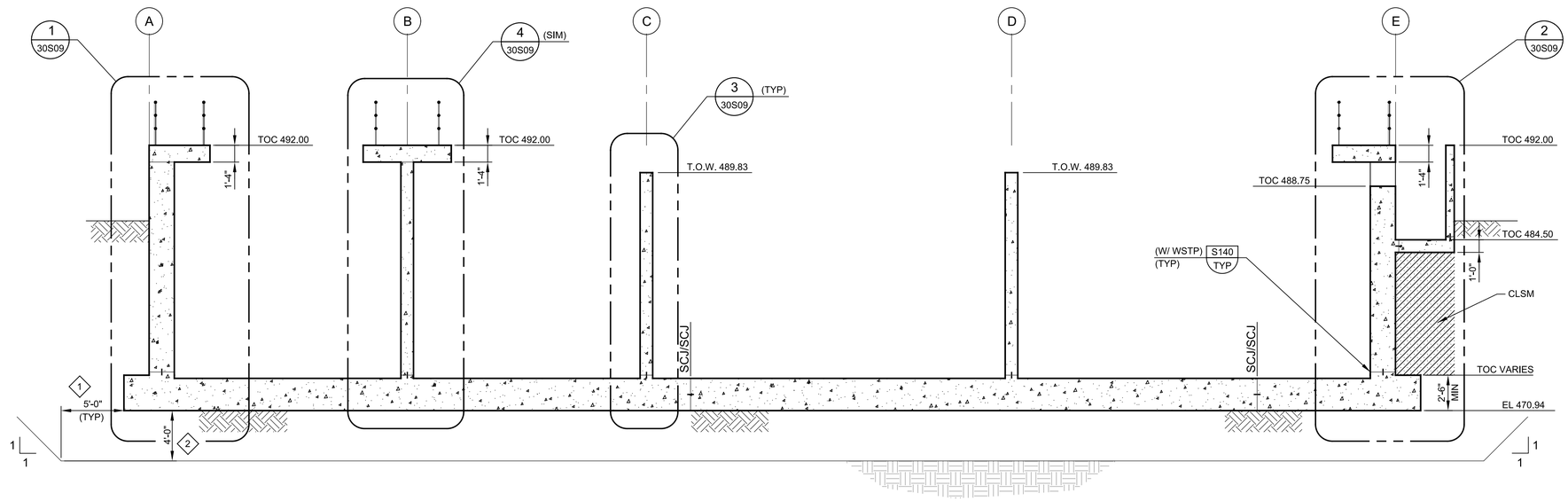

C SECTION

30S06

SCALE: 3/16" = 1'-0"
FILE: 10976A1030S311

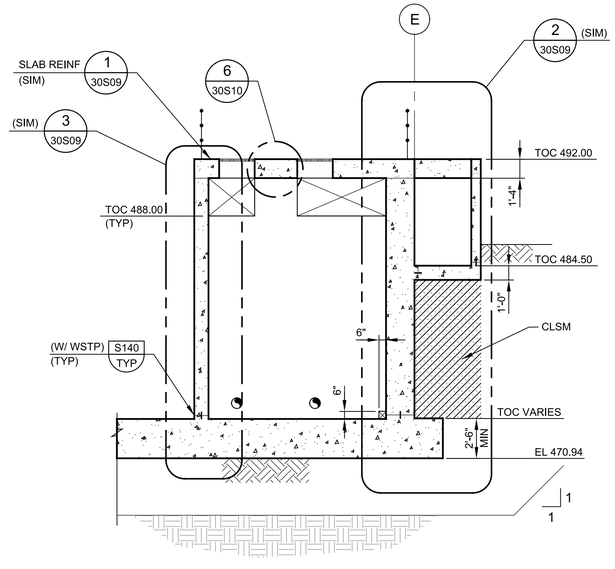

D SECTION

30S06

SCALE: 3/16" = 1'-0"
FILE: 10976A1030S314

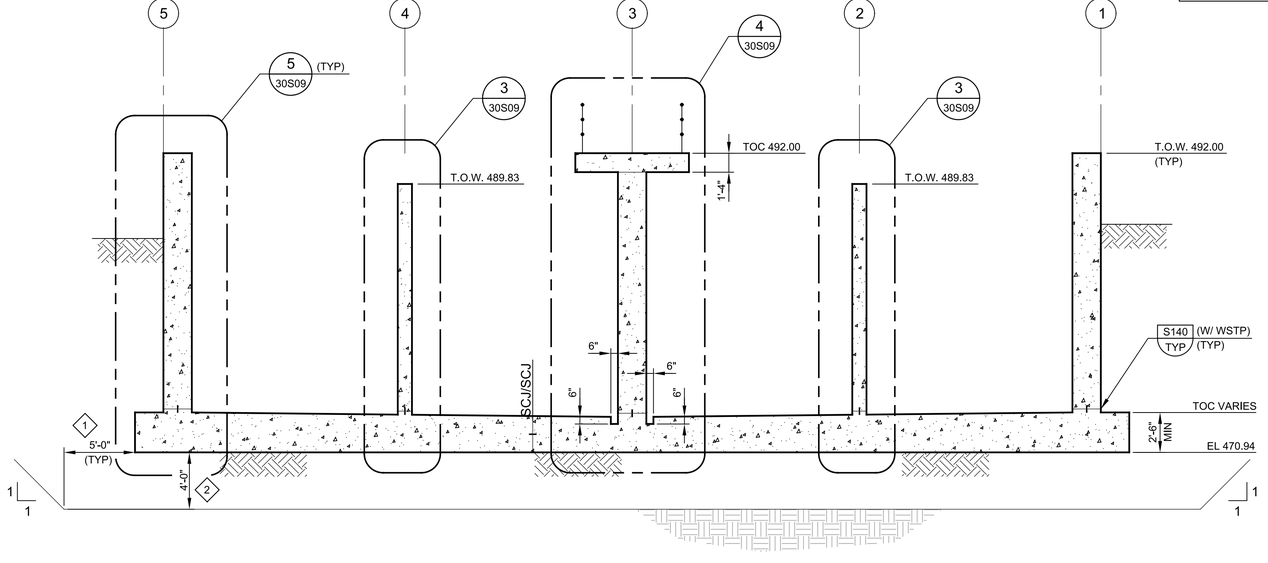

E SECTION

30S06

SCALE: 3/16" = 1'-0"
FILE: 10976A1030S312

GENERAL NOTES:

1. FOR GENERAL STRUCTURAL NOTES SEE DRAWING 00GS01.
2. SCJ = SLAB CONSTRUCTION JOINT PER DETAIL S110/TYP
   WCJ = WALL CONTRUCTION JOINT PER DETAIL S110/TYP.
3. FOR OPENINGS IN CONCRETE SLABS OR WALLS SEE S180/TYP.
4. VERIFY COORDINATES WITH CIVIL DRAWINGS.

◇ # KEY NOTES:

1 REMOVE AND REPLACE EXISTING SOIL WITH SELECT FILL FOR A MINIMUM OF 5FT OUTSIDE THE STRUCTURE FOOTPRINT.

2 FOR FOUNDATION AND SUBGRADE PREPARATION, SEE GENERAL STRUCTURAL NOTES DRAWING 00GS01.

THIS CONFORMED DOCUMENT IS RELEASED FOR THE CONVENIENCE OF THE CONTRACTOR UNDER THE AUTHORITY OF:

DANNY M HURTADO, P.E.
TX LIC NO. 104266

11-01-22
DATE

SEE DISCLAIMER FOR LIMITATIONS OF USE.

CONTRACT DOCUMENTS DATED JUNE 10, 2022, AS PART OF THE BIDDING DOCUMENTS (DRAWINGS AND SPECIFICATIONS) AND SUBSEQUENTLY ISSUED ADDENDA HAVE BEEN MERGED INTO ONE CONFORMING SET OF DOCUMENTS FOR THE CONVENIENCE OF THE CONTRACTOR. IF INCONSISTENCIES OR AMBIGUITIES BETWEEN "CONFORMED" DOCUMENTS AND CONTRACT DOCUMENTS ARE FOUND, THE CONTRACT DOCUMENTS SHALL GOVERN.

REV	DATE	BY	DESCRIPTION
			CONFORMED DOCUMENTS

DESIGNED KD
DRAWN TJD
CHECKED JDS
DATE NOVEMBER 2022

** ORIGINAL SEALED BY KWASI DUOSE 06-10-22 TX PE 100650 **

carollo®
TBPELS No. F-882

CITY OF AUSTIN
FOUNDED 1839

CITY OF AUSTIN

CITY OF AUSTIN
WILD HORSE RANCH WWTP EXPANSION
STRUCTURAL
AERATION BASIN 3 & 4
SECTIONS AND DETAILS 1

VERIFY SCALES
BAR IS ONE INCH ON ORIGINAL DRAWING
0 1"
IF NOT ONE INCH ON THIS SHEET, ADJUST SCALES ACCORDINGLY

JOB NO. 10976A.00
DRAWING NO. 30S08
SHEET NO. 345 OF 464

Plot Date: 10-OCT-2022 1:06:44 PM
User: LDietzel
PlotScale: 1:1
DesignScript: Carollo_Std_Pen_v0905.pen
ColorTable: gshade.ctb
Model: Layout1
LAST SAVED BY: jhill
PROJECT NO. 10976A10
FILE NAME: 10976A1030S008.dgn

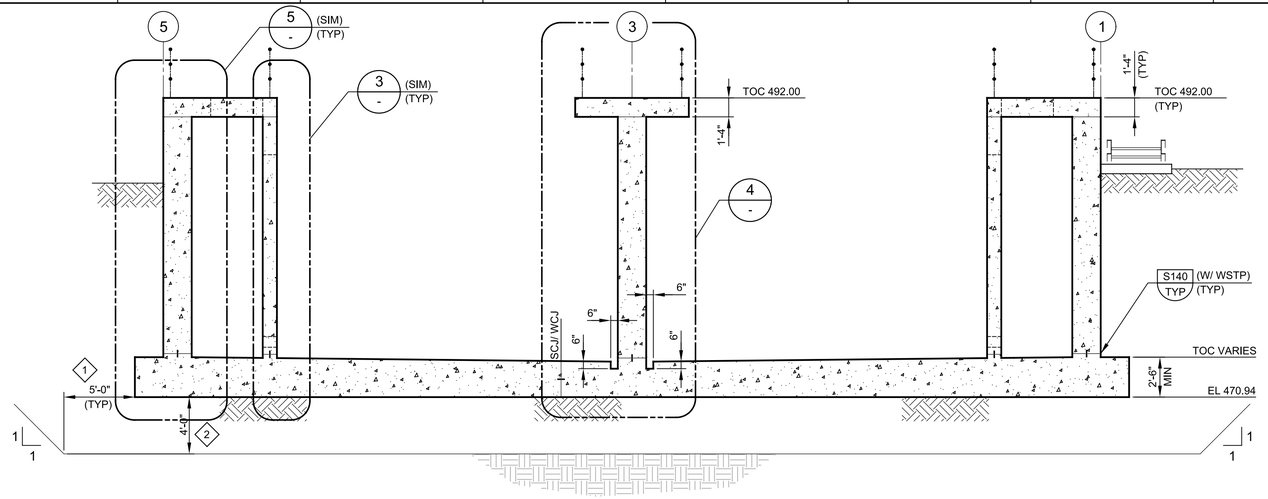

F SECTION
30S06
SCALE: 3/16" = 1'-0"
FILE: 10976A1030S313

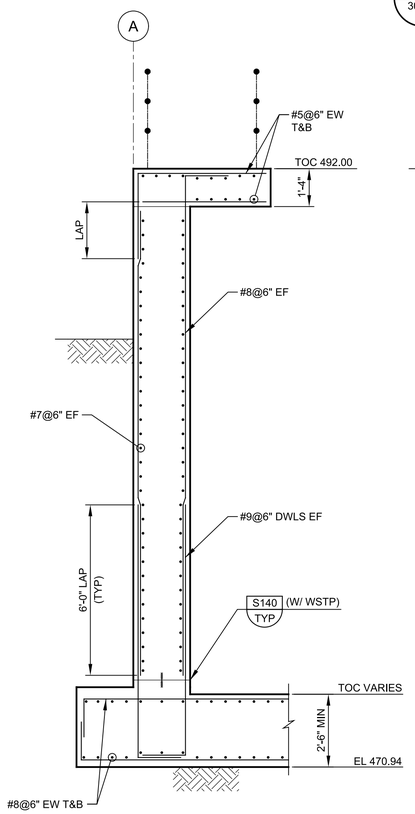

1 DETAIL
30S08
SCALE: 3/8" = 1'-0"
FILE: 10976A1030S311

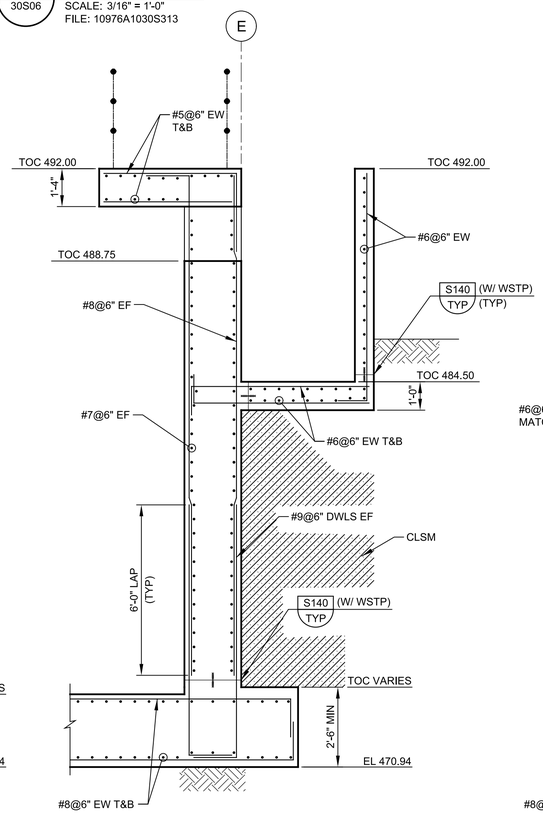

2 DETAIL
30S08
SCALE: 3/8" = 1'-0"
FILE: 10976A1030S311

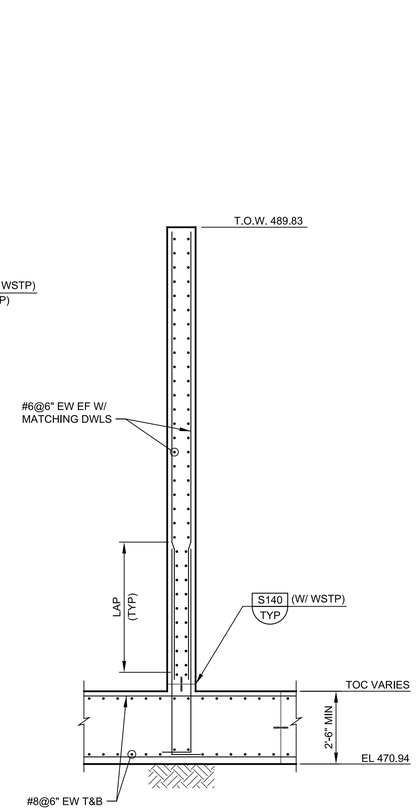

3 DETAIL
30S08
SCALE: 3/8" = 1'-0"
FILE: 10976A1030S311

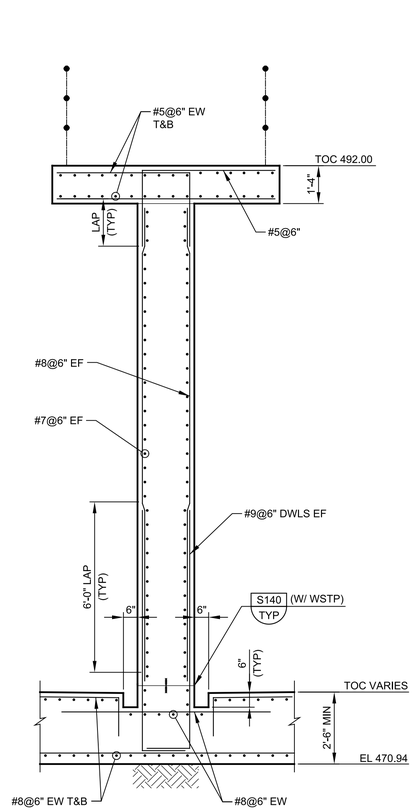

4 DETAIL
30S08
SCALE: 3/8" = 1'-0"
FILE: 10976A1030S312

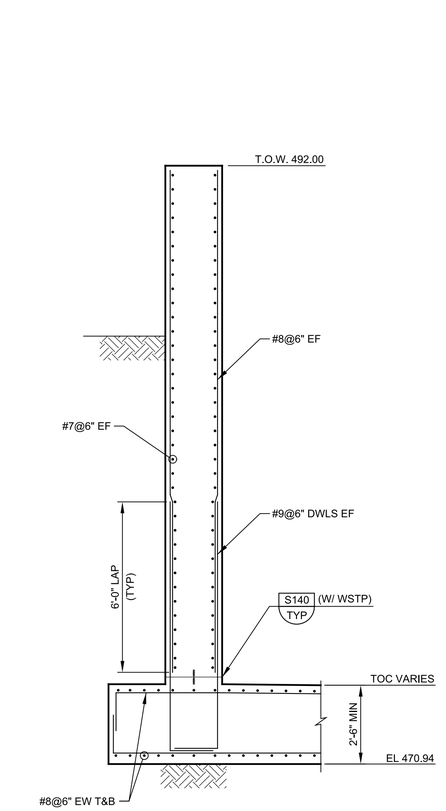

5 DETAIL
30S08
SCALE: 3/8" = 1'-0"
FILE: 10976A1030S312

THIS CONFORMED DOCUMENT IS RELEASED FOR THE CONVENIENCE OF THE CONTRACTOR UNDER THE AUTHORITY OF:

11-01-22

DANNY M HURTADO, P.E. DATE
TX LIC NO. 104266

SEE DISCLAIMER FOR LIMITATIONS OF USE.

CONTRACT DOCUMENTS DATED JUNE 10, 2022, AS PART OF THE BIDDING DOCUMENTS (DRAWINGS AND SPECIFICATIONS) AND SUBSEQUENTLY ISSUED ADDENDA HAVE BEEN MERGED INTO ONE CONFORMING SET OF DOCUMENTS FOR THE CONVENIENCE OF THE CONTRACTOR. IF INCONSISTENCIES OR AMBIGUITIES BETWEEN "CONFORMED" DOCUMENTS AND CONTRACT DOCUMENTS ARE FOUND, THE CONTRACT DOCUMENTS SHALL GOVERN.

GENERAL NOTES:

1. FOR GENERAL STRUCTURAL NOTES SEE DRAWING 00GS01.
2. SCJ = SLAB CONSTRUCTION JOINT PER DETAIL S110/TYP
   WCJ = WALL CONTRUCTION JOINT PER DETAIL S110/TYP.
3. FOR OPENINGS IN CONCRETE SLABS OR WALLS SEE S180/TYP.
4. VERIFY COORDINATES WITH CIVIL DRAWINGS.

KEY NOTES:

1 REMOVE AND REPLACE EXISTING SOIL WITH SELECT FILL FOR A MINIMUM OF 5FT OUTSIDE THE STRUCTURE FOOTPRINT.

2 FOR FOUNDATION AND SUBGRADE PREPARATION, SEE GENERAL STRUCTURAL NOTES DRAWING 00GS01.

REV	DATE	BY	DESCRIPTION
			CONFORMED DOCUMENTS

DESIGNED KD
DRAWN TJD
CHECKED JDS
DATE NOVEMBER 2022

** ORIGINAL SEALED BY KWASI DUOSE 06-10-22 TX PE 100650 **

carollo
TBPELS No. F-882

CITY OF AUSTIN
FOUNDED 1839
CITY OF AUSTIN

CITY OF AUSTIN
WILD HORSE RANCH WWTP EXPANSION
STRUCTURAL
AERATION BASIN 3 & 4
SECTIONS AND DETAILS 2

VERIFY SCALES
BAR IS ONE INCH ON ORIGINAL DRAWING
0 1"
IF NOT ONE INCH ON THIS SHEET, ADJUST SCALES ACCORDINGLY

JOB NO. 10976A.00
DRAWING NO. 30S09
SHEET NO. 346 OF 464

PROJECT NO. 10976A10 FILE NAME: 10976A1030S009.dgn

Plot Date: 10-OCT-2022 1:08:30 PM
User: LDietzel
PlotScale: 1:1
DesignScript: Carollo_Std_Pen_v0905.pen
ColorTable: gshade.ctb
Model: Layout1
LAST SAVED BY: jhill

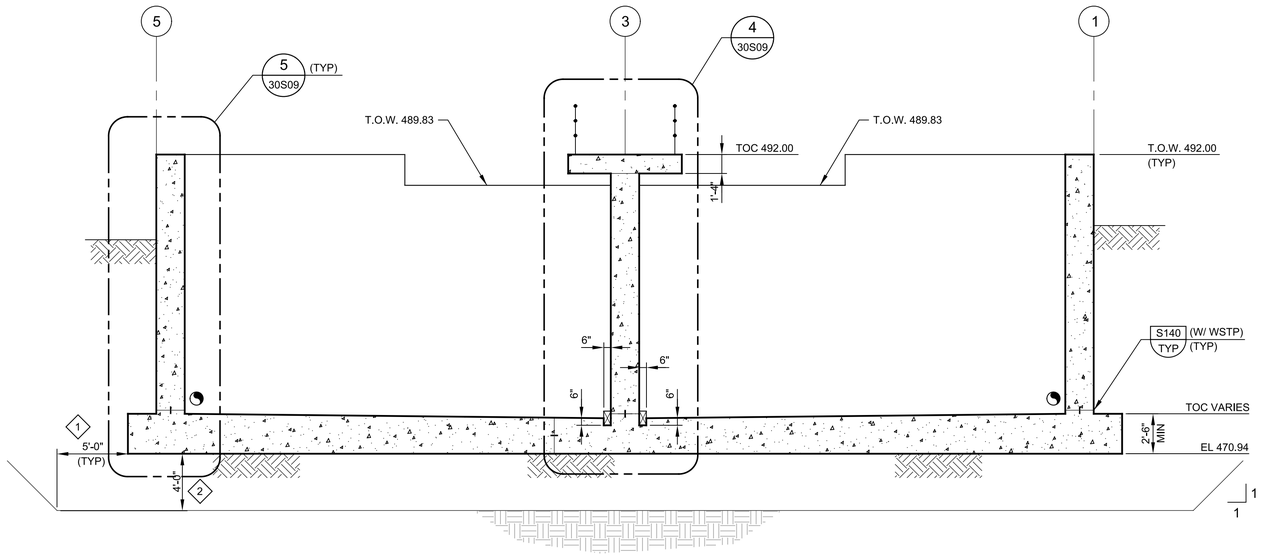

G SECTION

30S06

SCALE: 3/16" = 1'-0"
FILE: 10976A1030S315

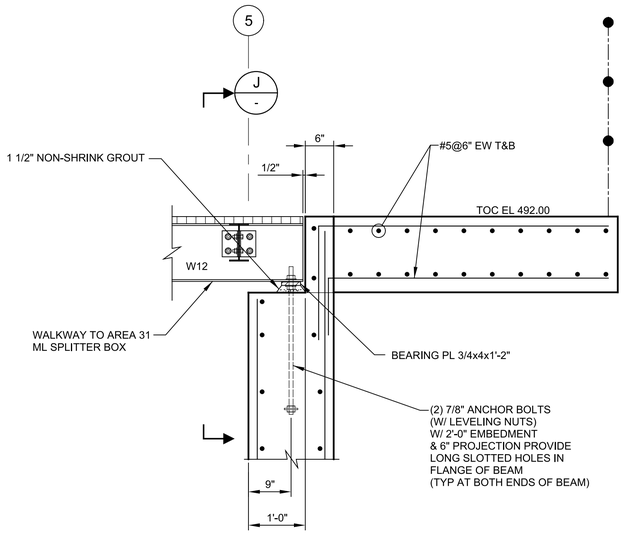

H SECTION

30S07

SCALE: 3/4" = 1'-0"
FILE: 10976A1030S316

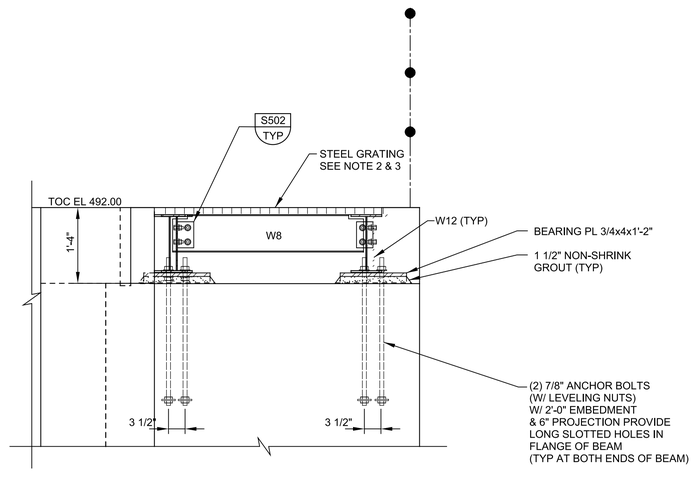

J SECTION

-

SCALE: 3/4" = 1'-0"
FILE: 10976A1030S317

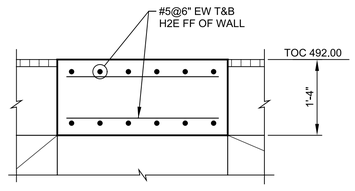

6 DETAIL

30S08

SCALE: 3/4" = 1'-0"
FILE: 10976A1030S314

GENERAL NOTES:

1. FOR GENERAL STRUCTURAL NOTES SEE DRAWING 00GS01.
2. STEEL GRATING LIVE LOAD = 100 psf.
3. ALL STRUCTURAL MEMBERS, CONNECTIONS AND GRATING SHALL BE HOT DIPPED GALVANIZED AT WALKWAY BRIDGE.
4. SCJ = SLAB CONSTRUCTION JOINT PER DETAIL S110/TYP
   WCJ = WALL CONTRUCTION JOINT PER DETAIL S110/TYP.
5. FOR OPENINGS IN CONCRETE SLABS OR WALLS SEE S180/TYP.
6. VERIFY COORDINATES WITH CIVIL DRAWINGS.

KEY NOTES:

1 REMOVE AND REPLACE EXISTING SOIL WITH SELECT FILL FOR A MINIMUM OF 5FT OUTSIDE THE STRUCTURE FOOTPRINT.

2 FOR FOUNDATION AND SUBGRADE PREPARATION, SEE GENERAL STRUCTURAL NOTES DRAWING 00GS01.

THIS CONFORMED DOCUMENT IS RELEASED FOR THE CONVENIENCE OF THE CONTRACTOR UNDER THE AUTHORITY OF:

11-01-22

DANNY M HURTADO, P.E.
TX LIC NO. 104266

DATE

SEE DISCLAIMER FOR LIMITATIONS OF USE.

CONTRACT DOCUMENTS DATED JUNE 10, 2022, AS PART OF THE BIDDING DOCUMENTS (DRAWINGS AND SPECIFICATIONS) AND SUBSEQUENTLY ISSUED ADDENDA HAVE BEEN MERGED INTO ONE CONFORMING SET OF DOCUMENTS FOR THE CONVENIENCE OF THE CONTRACTOR. IF INCONSISTENCIES OR AMBIGUITIES BETWEEN "CONFORMED" DOCUMENTS AND CONTRACT DOCUMENTS ARE FOUND, THE CONTRACT DOCUMENTS SHALL GOVERN.

REV	DATE	BY	DESCRIPTION
			CONFORMED DOCUMENTS

DESIGNED KD
DRAWN TJD
CHECKED JDS
DATE NOVEMBER 2022

** ORIGINAL SEALED BY KWASI DUOSE 06-10-22 TX PE 100650 **

carollo
TBPELS No. F-882

CITY OF AUSTIN
WILD HORSE RANCH WWTP EXPANSION
STRUCTURAL
AERATION BASIN 3 & 4
SECTIONS AND DETAILS 3

VERIFY SCALES
BAR IS ONE INCH ON ORIGINAL DRAWING
0 1"
IF NOT ONE INCH ON THIS SHEET, ADJUST SCALES ACCORDINGLY

JOB NO. 10976A.00
DRAWING NO. 30S10
SHEET NO. 347 OF 464

PROJECT NO. 10976A10 FILE NAME: 10976A1030S010.dgn

Plot Date: 10-OCT-2022 1:10:22 PM
User: LDietzel
PlotScale: 1:1
DesignScript: Carollo_Std_Pen_v0905.pen
ColorTable: gshade.ctb
Model: Layout1
LAST SAVED BY: jhill

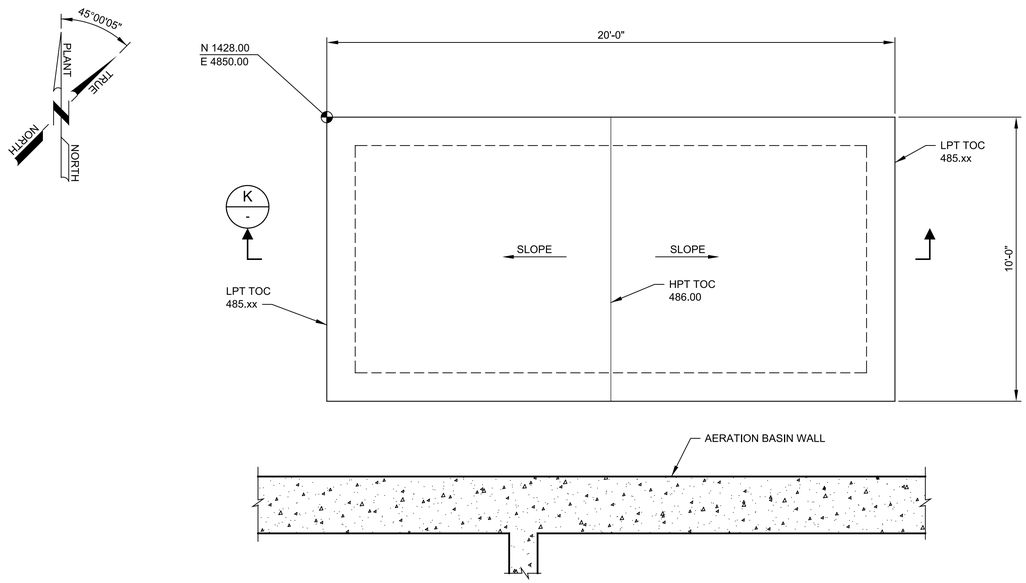

7 DETAIL
30S07
SCALE: 3/8" = 1'-0"
FILE: 10976A1030S113

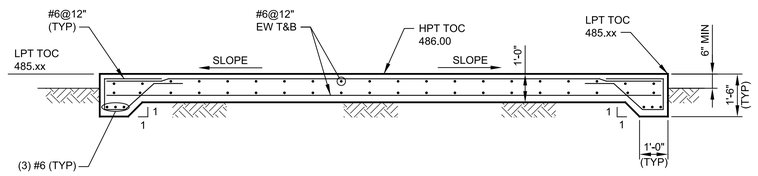

K SECTION
30S07
SCALE: 3/8" = 1'-0"
FILE: 10976A1030S318

GENERAL NOTES:

1. FOR GENERAL STRUCTURAL NOTES SEE DRAWING 00GS01.
2. FOR FOUNDATION AND SUBGRADE PREPARATION, SEE GENERAL STRUCTURAL NOTES DRAWING 00GS01, FOLLOW RECOMMENDATION FOR AREA 30 AERATION BASINS.
3. FOR OPENINGS IN CONCRETE SLABS OR WALLS SEE S180/TYP.
4. VERIFY COORDINATES WITH CIVIL DRAWINGS.

THIS CONFORMED DOCUMENT IS RELEASED FOR THE CONVENIENCE OF THE CONTRACTOR UNDER THE AUTHORITY OF:

11-01-22
DANNY M HURTADO, P.E. DATE
TX LIC NO. 104266

SEE DISCLAIMER FOR LIMITATIONS OF USE.

CONTRACT DOCUMENTS DATED JUNE 10, 2022, AS PART OF THE BIDDING DOCUMENTS (DRAWINGS AND SPECIFICATIONS) AND SUBSEQUENTLY ISSUED ADDENDA HAVE BEEN MERGED INTO ONE CONFORMING SET OF DOCUMENTS FOR THE CONVENIENCE OF THE CONTRACTOR. IF INCONSISTENCIES OR AMBIGUITIES BETWEEN "CONFORMED" DOCUMENTS AND CONTRACT DOCUMENTS ARE FOUND, THE CONTRACT DOCUMENTS SHALL GOVERN.

REV	DATE	BY	DESCRIPTION
			CONFORMED DOCUMENTS

DESIGNED KD
DRAWN TJD
CHECKED JDS
DATE NOVEMBER 2022

** ORIGINAL SEALED BY KWASI DUOSE 06-10-22 TX PE 100650 **

carollo®
TBPELS No. F-882

CITY OF AUSTIN
FOUNDED 1839

CITY OF AUSTIN

CITY OF AUSTIN
WILD HORSE RANCH WWTP EXPANSION
STRUCTURAL
TEMPORARY ALKALINITY ADDITION PAD
PLAN AND SECTION

VERIFY SCALES
BAR IS ONE INCH ON ORIGINAL DRAWING
0 1"
IF NOT ONE INCH ON THIS SHEET, ADJUST SCALES ACCORDINGLY

JOB NO. 10976A.00
DRAWING NO. 30S11
SHEET NO. 348 OF 464

PROJECT NO. 10976A10 FILE NAME: 10976A1030S011.dgn

LAST SAVED BY: jhill Model: Layout1 ColorTable: gshade.ctb DesignScript: Carollo_Std_Pen_v0905.pen PlotScale: 1:1 Plot Date: 10-OCT-2022 1:12:12 PM User: LDietzel

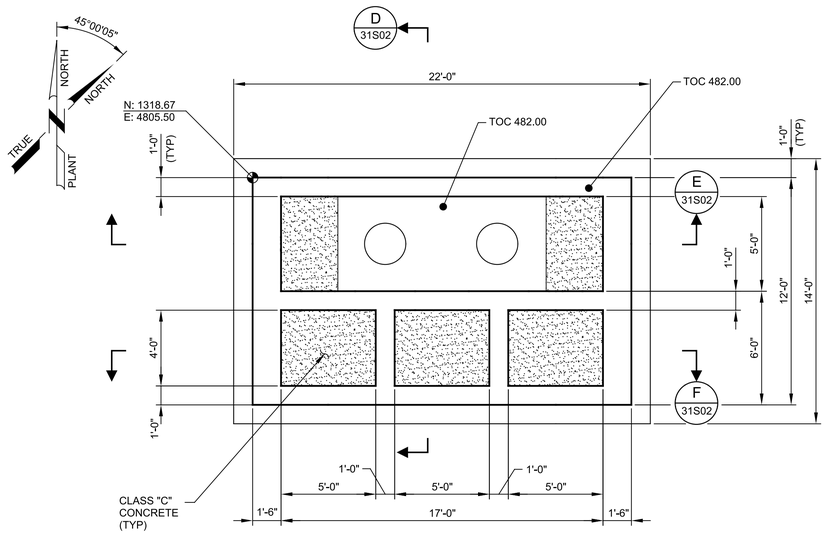

A LOWER PLAN

SCALE: 1/4" = 1'-0"
FILE: 10976A1031S0101

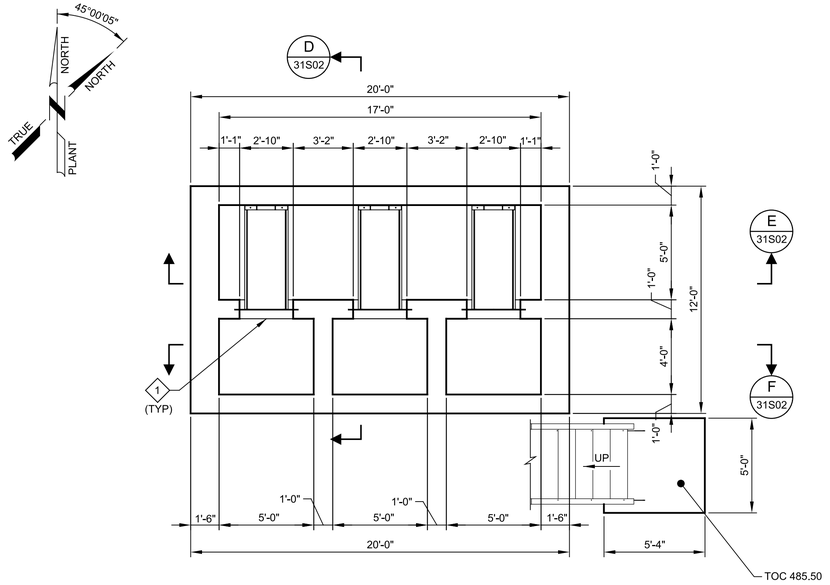

B INTERMEDIATE PLAN

SCALE: 1/4" = 1'-0"
FILE: 10976A1031S0103

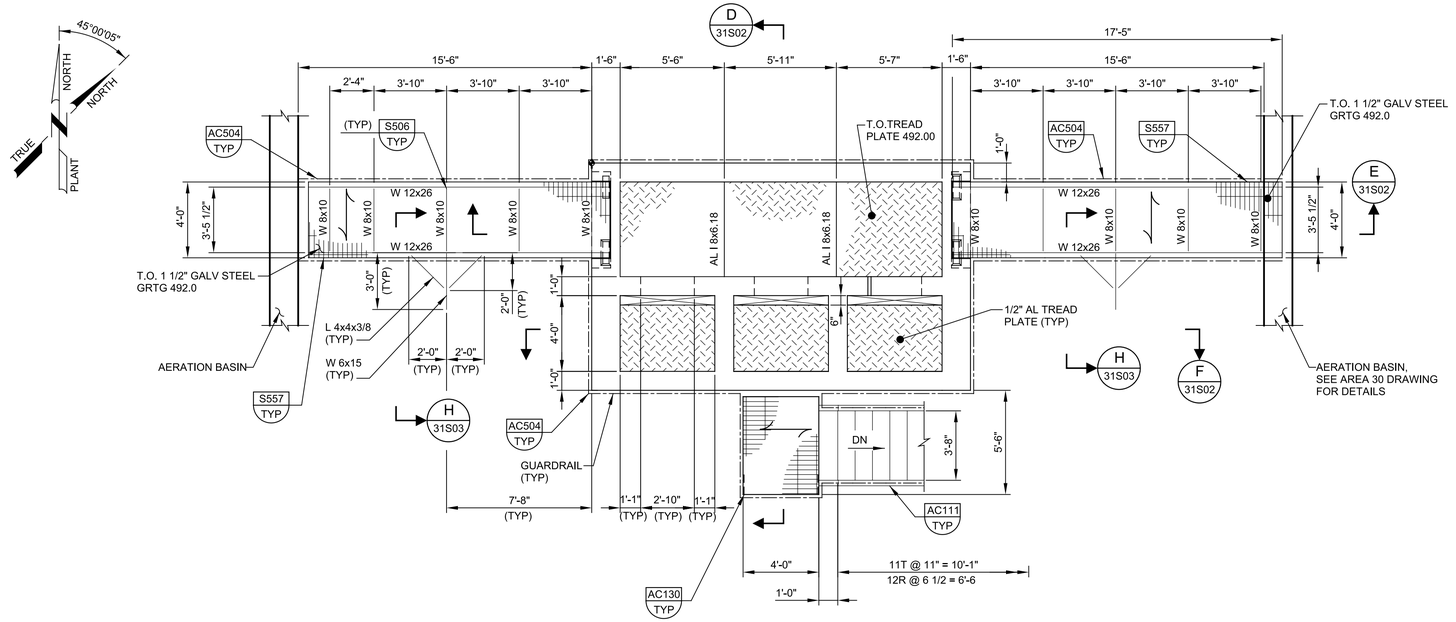

C UPPER PLAN

SCALE: 1/4" = 1'-0"
FILE: 10976A1031S0102

GENERAL NOTES:

1. FOR GENERAL STRUCTURAL NOTES SEE DRAWING 00GS01.
2. LIVE LOAD = 100 psf
3. NET ALLOWABLE SOIL BEARING PRESSURE = 3000 PSF.
4. FOR OPENINGS IN CONCRETE SLABS OR WALLS SEE S180/TYP.
5. VERIFY COORDINATES WITH CIVIL DRAWINGS.

(#) KEY NOTES:

1. COORDINATE OPENING DIMENSIONS AND LOCATION WITH TROUGH MANUFACTURER TO ENSURE PROPER SUPPORT AND WEIR ELEVATION. THE OPENING SHALL PROVIDE A MINIMUM OF 4 INCHES SPACE AROUND TROUGH. OPENING IN WALL SHALL BE FILLED WITH GROUT AFTER TROUGH IS POSITIONED AND LEVELED.

THIS CONFORMED DOCUMENT IS RELEASED FOR THE CONVENIENCE OF THE CONTRACTOR UNDER THE AUTHORITY OF:

11-01-22
DANNY M HURTADO, P.E. DATE
TX LIC NO. 104266

SEE DISCLAIMER FOR LIMITATIONS OF USE.

CONTRACT DOCUMENTS DATED JUNE 10, 2022, AS PART OF THE BIDDING DOCUMENTS (DRAWINGS AND SPECIFICATIONS) AND SUBSEQUENTLY ISSUED ADDENDA HAVE BEEN MERGED INTO ONE CONFORMING SET OF DOCUMENTS FOR THE CONVENIENCE OF THE CONTRACTOR. IF INCONSISTENCIES OR AMBIGUITIES BETWEEN "CONFORMED" DOCUMENTS AND CONTRACT DOCUMENTS ARE FOUND, THE CONTRACT DOCUMENTS SHALL GOVERN.

REV	DATE	BY	DESCRIPTION
			CONFORMED DOCUMENTS

DESIGNED AAC
DRAWN JKK
CHECKED JDS
DATE NOVEMBER 2022

** ORIGINAL SEALED BY KWASI DUOSE 06-10-22 TX PE 100650 **

carollo JDS
TBPELS No. F-882

CITY OF AUSTIN
WILD HORSE RANCH WWTP EXPANSION
STRUCTURAL
MIXED LIQUOR SPLITTER BOX PLANS

VERIFY SCALES
BAR IS ONE INCH ON ORIGINAL DRAWING
0 1"
IF NOT ONE INCH ON THIS SHEET, ADJUST SCALES ACCORDINGLY

JOB NO. 10976A.00
DRAWING NO. 31S01
SHEET NO. 349 OF 464

PROJECT NO. 10976A10 FILE NAME: 10976A1031S001.dgn

Plot Date: 10-OCT-2022 1:13:52 PM
User: LDietzel
Model: Layout1 ColorTable: gshade.ctb DesignScript: Carollo_Std_Pen_v0905.pen PlotScale: 1:1
LAST SAVED BY: denriquez

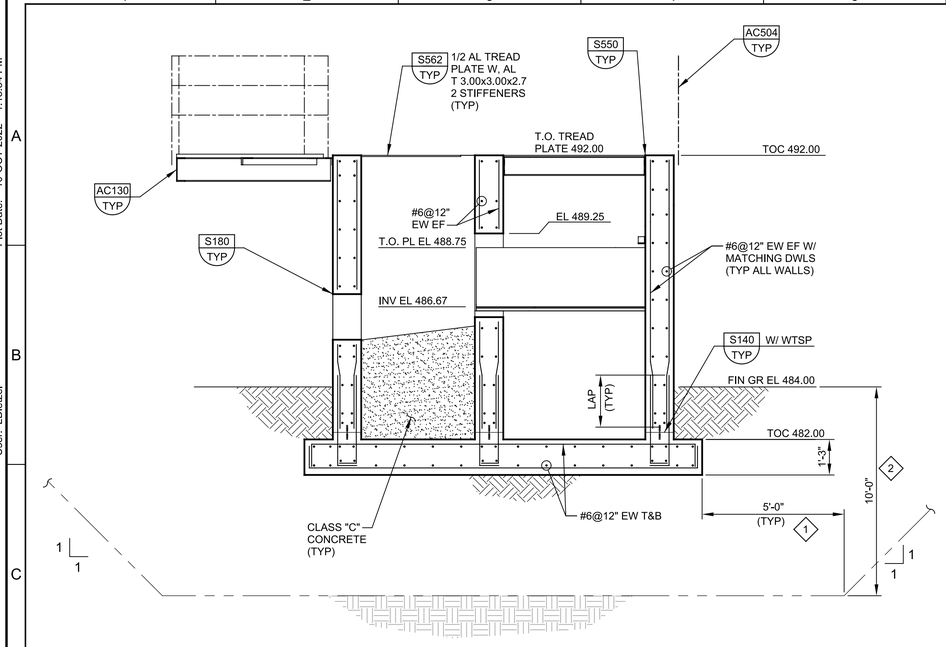

D SECTION
31S01
SCALE: 3/8" = 1'-0"
FILE: 10976A1031S0301

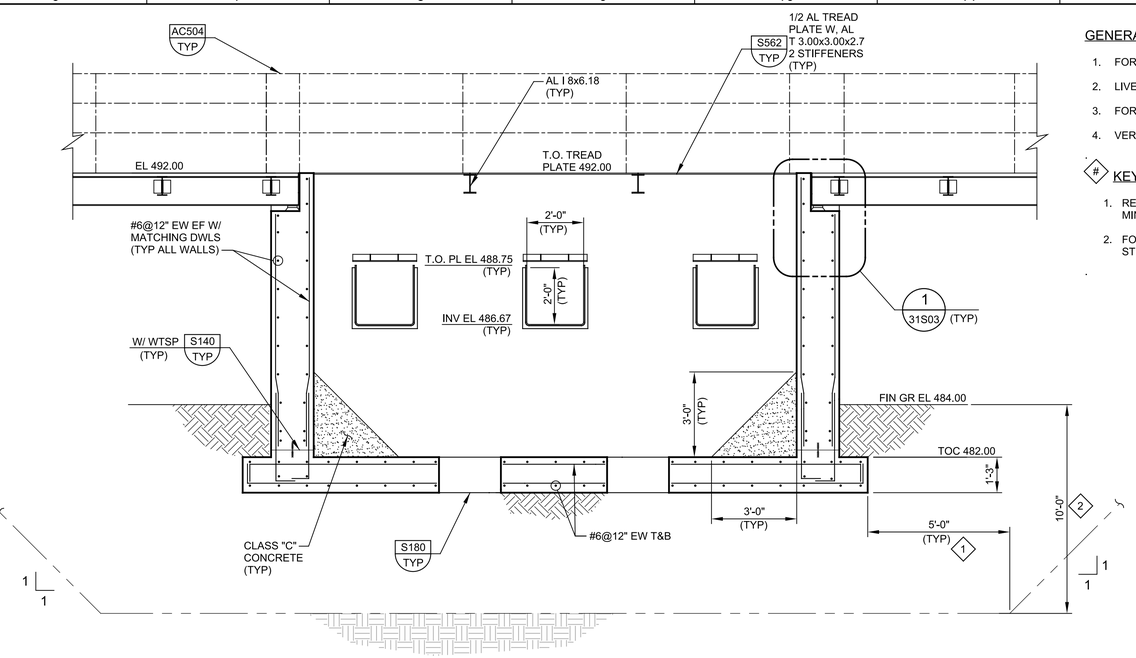

E SECTION
31S01
SCALE: 3/8" = 1'-0"
FILE: 10976A1031S0302

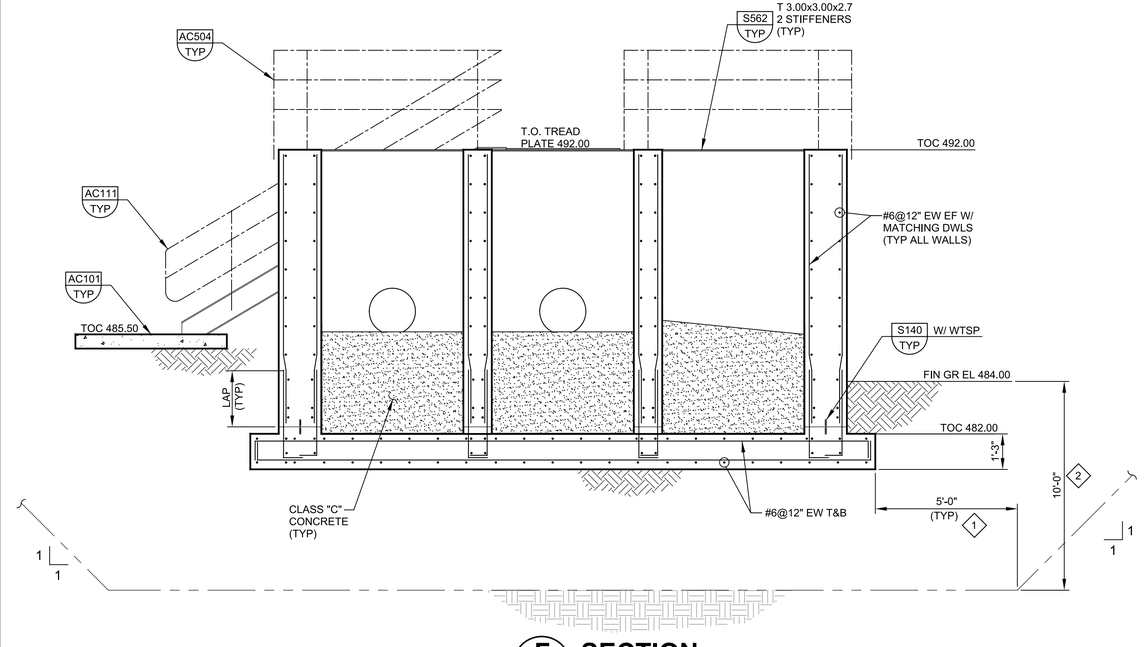

F SECTION
31S01
SCALE: 3/8" = 1'-0"
FILE: 10976A1031S0303

GENERAL NOTES:

1. FOR GENERAL STRUCTURAL NOTES SEE DRAWING 00GS01.
2. LIVE LOAD = 100 PSF.
3. FOR OPENINGS IN CONCRETE SLABS OR WALLS SEE S180/TYP.
4. VERIFY COORDINATES WITH CIVIL DRAWINGS.

KEY NOTES:

1. REMOVE AND REPLACE EXISTING SOIL WITH SELECT FILL FOR MINIMUM OF 5FT OUTSIDE THE STRUCTURE FOOTPRINT.
2. FOR FOUNDATION AND SUBGRADE PREPARATION, SEE GENERAL STRUCTURAL NOTES DRAWING 00GS01.

THIS CONFORMED DOCUMENT IS RELEASED FOR THE CONVENIENCE OF THE CONTRACTOR UNDER THE AUTHORITY OF:

DANNY M HURTADO, P.E.
TX LIC NO. 104266

11-01-22
DATE

SEE DISCLAIMER FOR LIMITATIONS OF USE.

CONTRACT DOCUMENTS DATED JUNE 10, 2022, AS PART OF THE BIDDING DOCUMENTS (DRAWINGS AND SPECIFICATIONS) AND SUBSEQUENTLY ISSUED ADDENDA HAVE BEEN MERGED INTO ONE CONFORMING SET OF DOCUMENTS FOR THE CONVENIENCE OF THE CONTRACTOR. IF INCONSISTENCIES OR AMBIGUITIES BETWEEN "CONFORMED" DOCUMENTS AND CONTRACT DOCUMENTS ARE FOUND, THE CONTRACT DOCUMENTS SHALL GOVERN.

REV	DATE	BY	DESCRIPTION
			CONFORMED DOCUMENTS

DESIGNED AAC
DRAWN JKK
CHECKED JDS
DATE NOVEMBER 2022

** ORIGINAL SEALED BY KWASI DUOSE 06-10-22 TX PE 100650 **

carollo®
TBPELS No. F-882

CITY OF AUSTIN

CITY OF AUSTIN
WILD HORSE RANCH WWTP EXPANSION
STRUCTURAL
MIXED LIQUOR SPLITTER BOX SECTIONS 1

VERIFY SCALES
BAR IS ONE INCH ON ORIGINAL DRAWING
0 1"
IF NOT ONE INCH ON THIS SHEET, ADJUST SCALES ACCORDINGLY

JOB NO. 10976A.00
DRAWING NO. 31S02
SHEET NO. 350 OF 464

Plot Date: 10-OCT-2022 1:15:34 PM
User: LDietzel
PlotScale: 1:1
DesignScript: Carollo_Std_Pen_v0905.pen
ColorTable: gshade.ctb
Model: Layout1
LAST SAVED BY: jhill

PROJECT NO. 10976A10 FILE NAME: 10976A1031S002.dgn

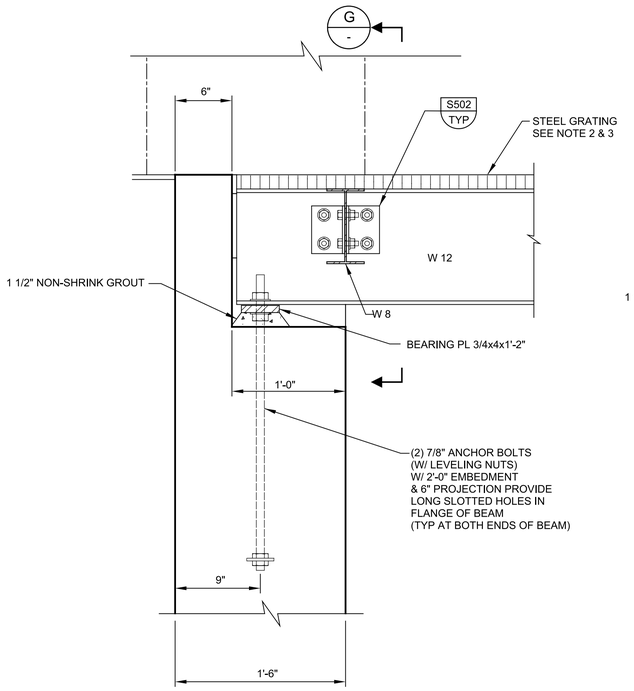

1 DETAIL
31S02

SCALE: 1 1/2" = 1'-0"
FILE: 10976A1031S0302

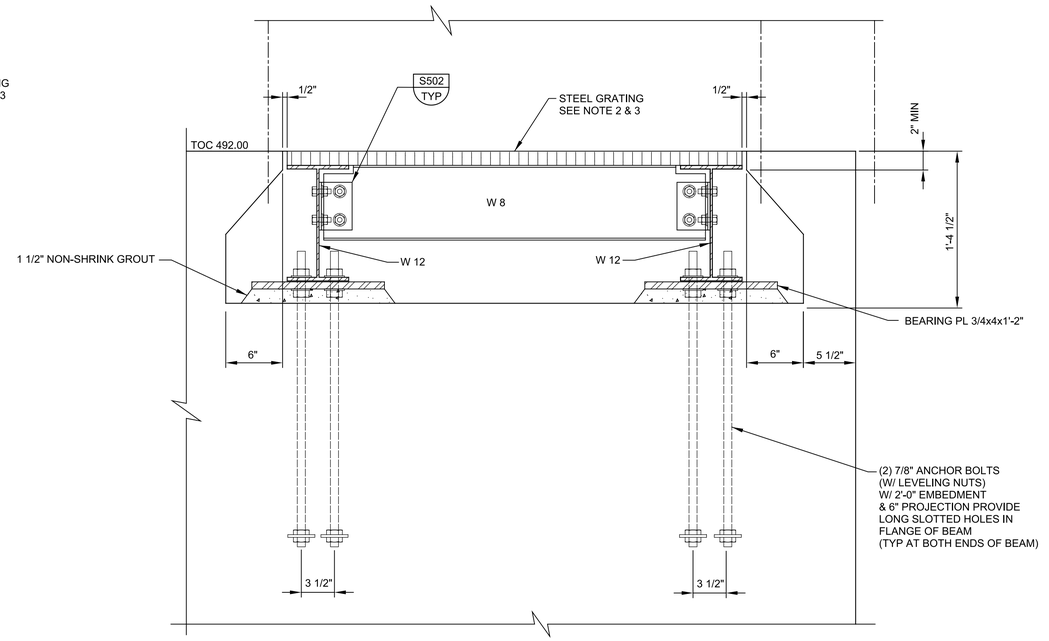

G SECTION
-

SCALE: 1 1/2" = 1'-0"
FILE: 10976A1031S0304

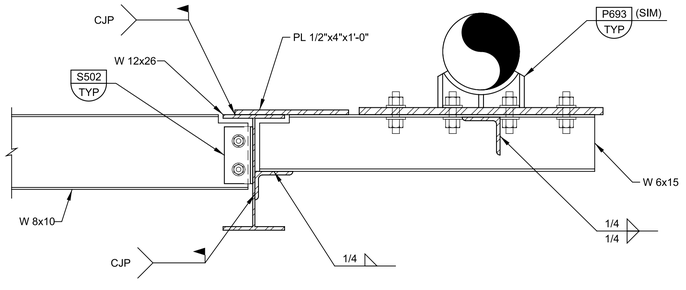

H SECTION
31S01

SCALE: 1 1/2" = 1'-0"
FILE: 10976A1031S0305

GENERAL NOTES:

1. FOR GENERAL STRUCTURAL NOTES SEE DRAWING 00GS01.
2. STEEL GRATING LIVE LOAD = 100 PSF.
3. ALL STRUCTURAL MEMBERS, CONNECTIONS AND GRATING SHALL BE HOT DIPPED GALVANIZED AT WALKWAY BRIDGE.
4. FOR OPENING IN CONCRETE SLABS OR WALLS SEE S180/TYP.
5. VERIFY COORDINATES WITH CIVIL DRAWINGS.

THIS CONFORMED DOCUMENT IS RELEASED FOR THE CONVENIENCE OF THE CONTRACTOR UNDER THE AUTHORITY OF:

DANNY M HURTADO, P.E.
TX LIC NO. 104266

11-01-22
DATE

SEE DISCLAIMER FOR LIMITATIONS OF USE.

CONTRACT DOCUMENTS DATED JUNE 10, 2022, AS PART OF THE BIDDING DOCUMENTS (DRAWINGS AND SPECIFICATIONS) AND SUBSEQUENTLY ISSUED ADDENDA HAVE BEEN MERGED INTO ONE CONFORMING SET OF DOCUMENTS FOR THE CONVENIENCE OF THE CONTRACTOR. IF INCONSISTENCIES OR AMBIGUITIES BETWEEN "CONFORMED" DOCUMENTS AND CONTRACT DOCUMENTS ARE FOUND, THE CONTRACT DOCUMENTS SHALL GOVERN.

REV	DATE	BY	DESCRIPTION
			CONFORMED DOCUMENTS

DESIGNED AAC
DRAWN JKK
CHECKED JDS
DATE NOVEMBER 2022

** ORIGINAL SEALED BY KWASI DUOSE 06-10-22 TX PE 100650 **

carollo®
TBPELS No. F-882

CITY OF AUSTIN
FOUNDED 1839

CITY OF AUSTIN

CITY OF AUSTIN
WILD HORSE RANCH WWTP EXPANSION
STRUCTURAL
MIXED LIQUOR SPLITTER BOX
SECTIONS 2

VERIFY SCALES
BAR IS ONE INCH ON ORIGINAL DRAWING
0 1"
IF NOT ONE INCH ON THIS SHEET, ADJUST SCALES ACCORDINGLY

JOB NO. 10976A.00
DRAWING NO. 31S03
SHEET NO. 351 OF 464

LAST SAVED BY: denriquez

PROJECT NO. 10976A10 FILE NAME: 10976A1031S003.dgn

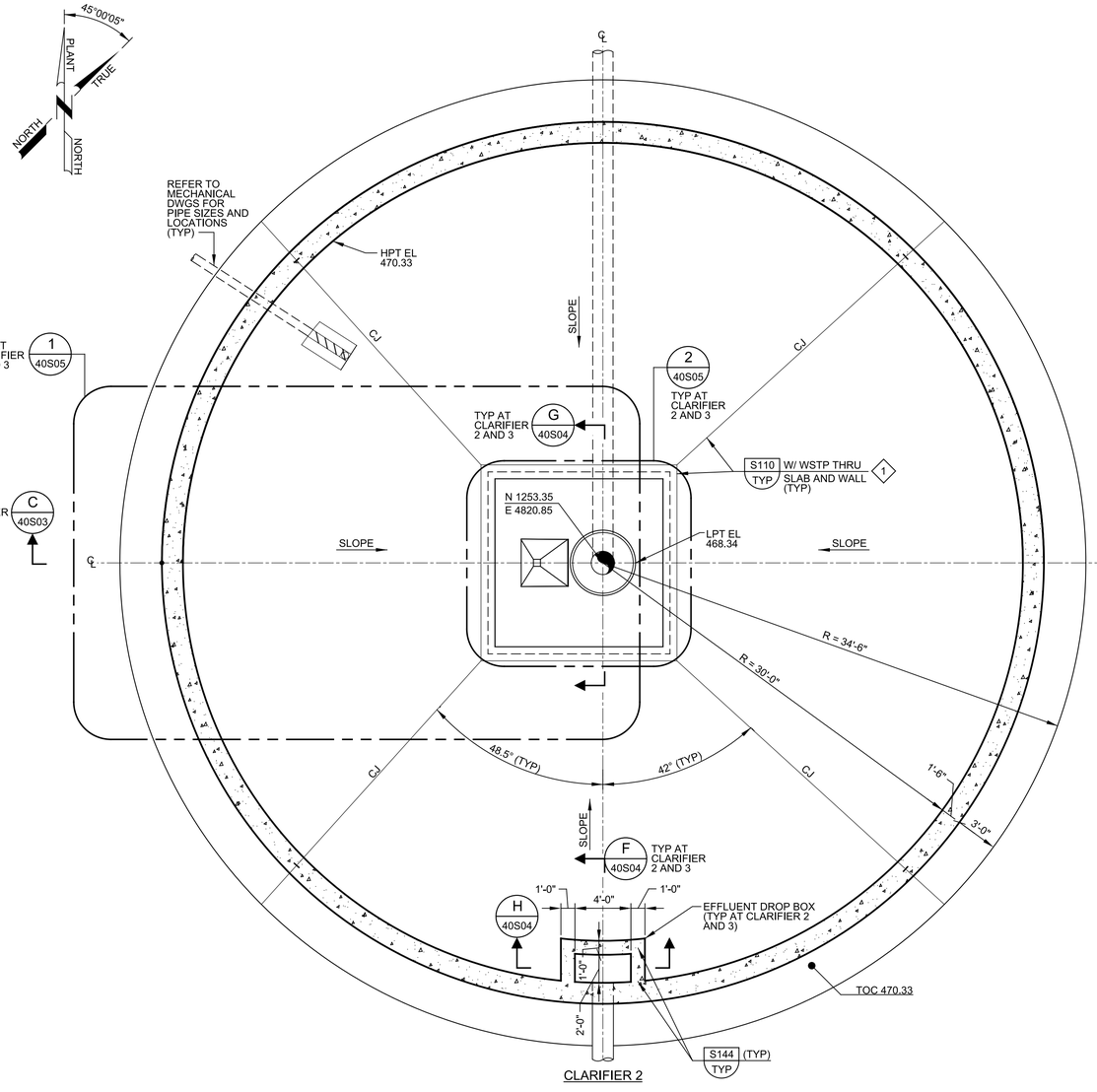

CLARIFIER 2

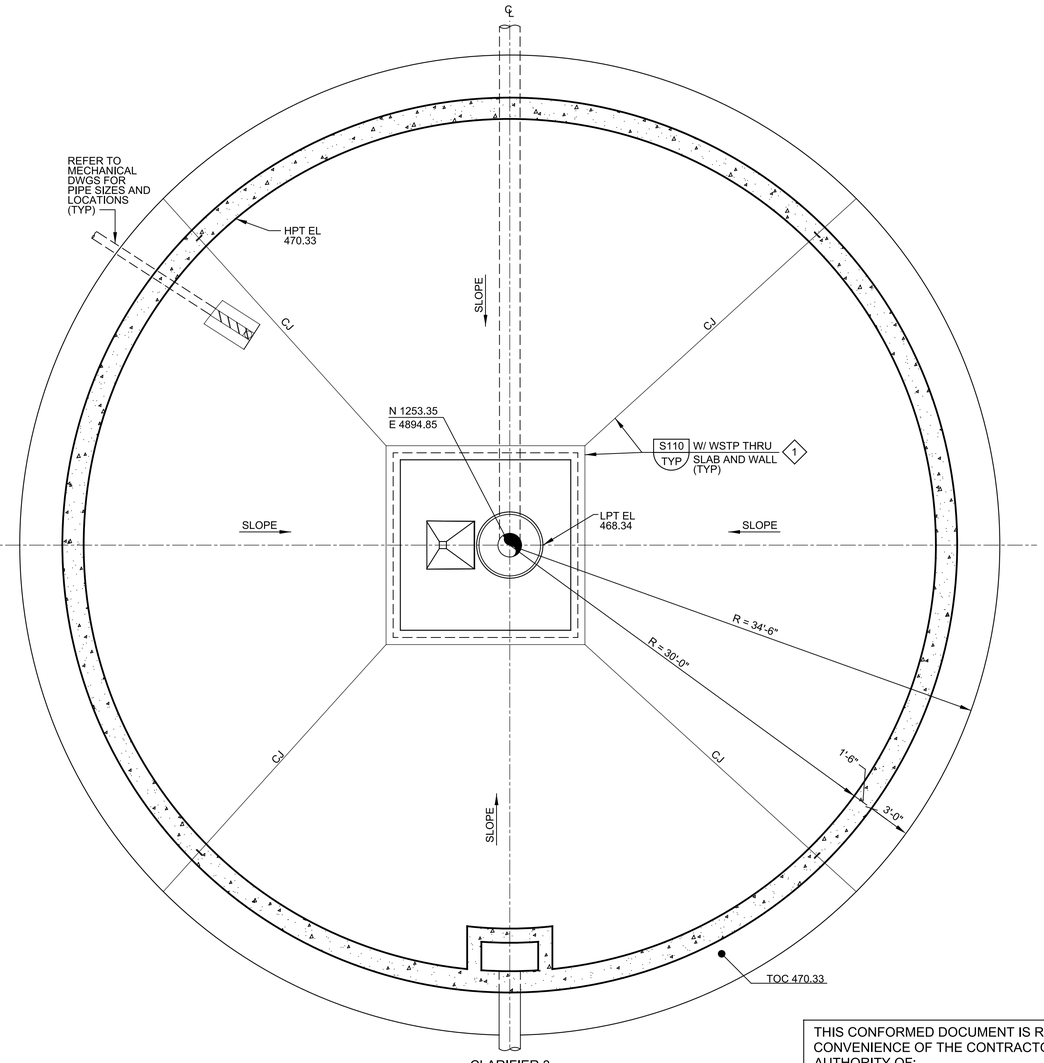

CLARIFIER 3

NOTE: CLARIFIER 3 IS IDENTICAL TO CLARIFIER 2.

A LOWER PLAN

SCALE: 3/16" = 1'-0"
FILE: 10976A1040S101

GENERAL NOTES:

1. FOR GENERAL STRUCTURAL NOTES SEE DWG NO. 00GS01.
2. LIVE LOAD = 100 PSF.
3. FOR ADDITIONAL REINFORCEMENT REQUIREMENT SEE S102/TYP.
4. FOR LOCATIONS AND ELEVATIONS OF PIPE PENETRATIONS, SEE MECHANICAL DRAWINGS, REINFORCE ALL PENETRATIONS PER S180/TYP.
5. VERIFY COORDINATES WITH CIVIL DRAWINGS.

KEY NOTES:

1. LOCATE CONSTRUCTION JOINTS TO CLEAR ALL PIPES IN WALL.

THIS CONFORMED DOCUMENT IS RELEASED FOR THE CONVENIENCE OF THE CONTRACTOR UNDER THE AUTHORITY OF:

DANNY M HURTADO, P.E.
TX LIC NO. 104266
11-01-22
DATE

SEE DISCLAIMER FOR LIMITATIONS OF USE.

CONTRACT DOCUMENTS DATED JUNE 10, 2022, AS PART OF THE BIDDING DOCUMENTS (DRAWINGS AND SPECIFICATIONS) AND SUBSEQUENTLY ISSUED ADDENDA HAVE BEEN MERGED INTO ONE CONFORMING SET OF DOCUMENTS FOR THE CONVENIENCE OF THE CONTRACTOR. IF INCONSISTENCIES OR AMBIGUITIES BETWEEN "CONFORMED" DOCUMENTS AND CONTRACT DOCUMENTS ARE FOUND, THE CONTRACT DOCUMENTS SHALL GOVERN.

REV	DATE	BY	DESCRIPTION
			CONFORMED DOCUMENTS

DESIGNED KMD
DRAWN JLH
CHECKED JDS
DATE NOVEMBER 2022

** ORIGINAL SEALED BY KWASI DUOSE 06-10-22 TX PE 100650 **

carollo®
TBPELS No. F-882

CITY OF AUSTIN
FOUNDED 1839
CITY OF AUSTIN

CITY OF AUSTIN
WILD HORSE RANCH WWTP EXPANSION
STRUCTURAL
CLARIFIER 2 AND 3
LOWER PLAN

VERIFY SCALES
BAR IS ONE INCH ON ORIGINAL DRAWING
0 1"
IF NOT ONE INCH ON THIS SHEET, ADJUST SCALES ACCORDINGLY

JOB NO. 10976A.00
DRAWING NO. 40S01
SHEET NO. 352 OF 464

Plot Date: 10-OCT-2022 1:20:20 PM
User: LDietzel
PlotScale: 1:1
DesignScript: Carollo_Std_Pen_v0905.pen
ColorTable: gshade.ctb
Model: Layout1
LAST SAVED BY: jhill

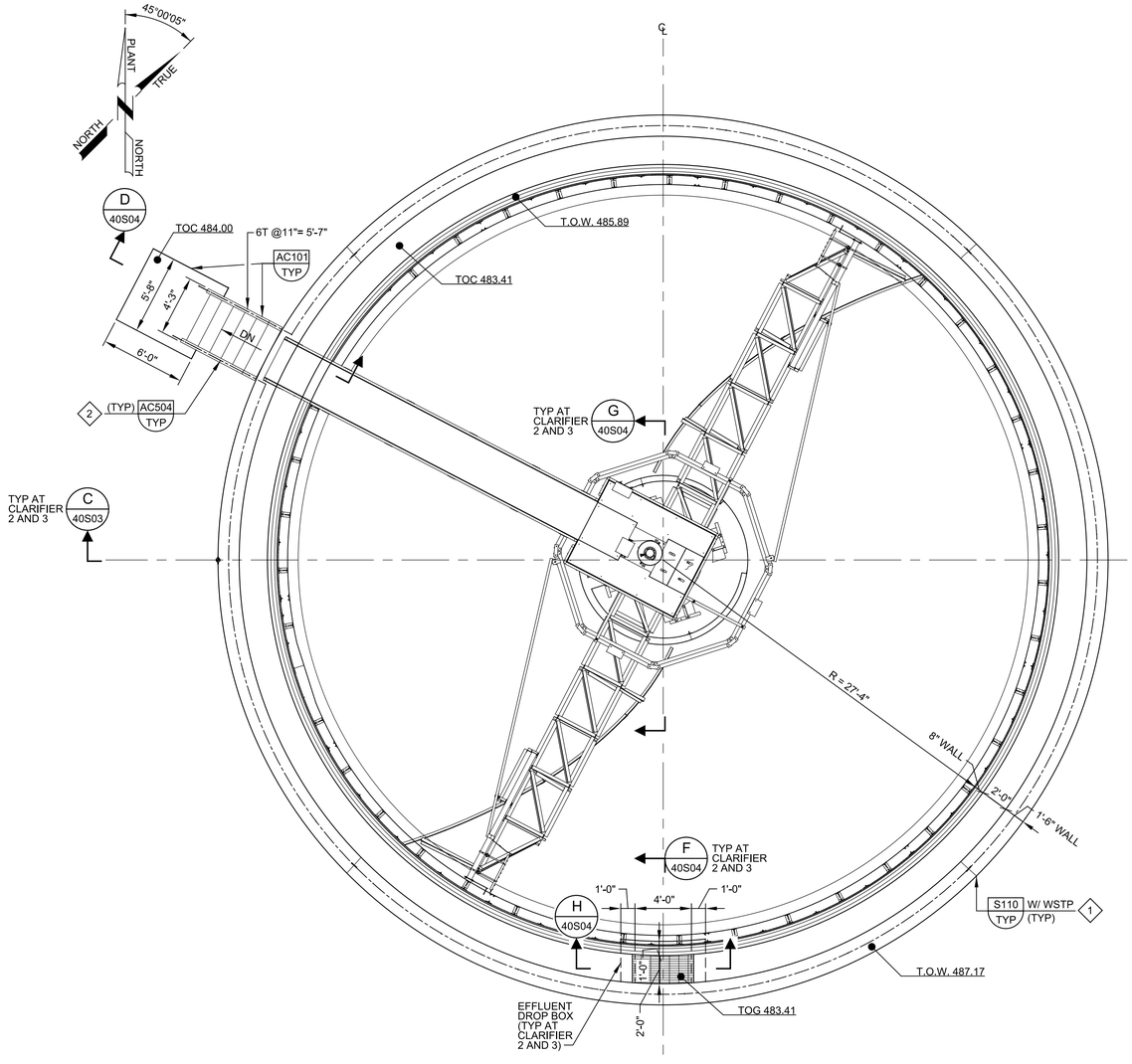

CLARIFIER 2

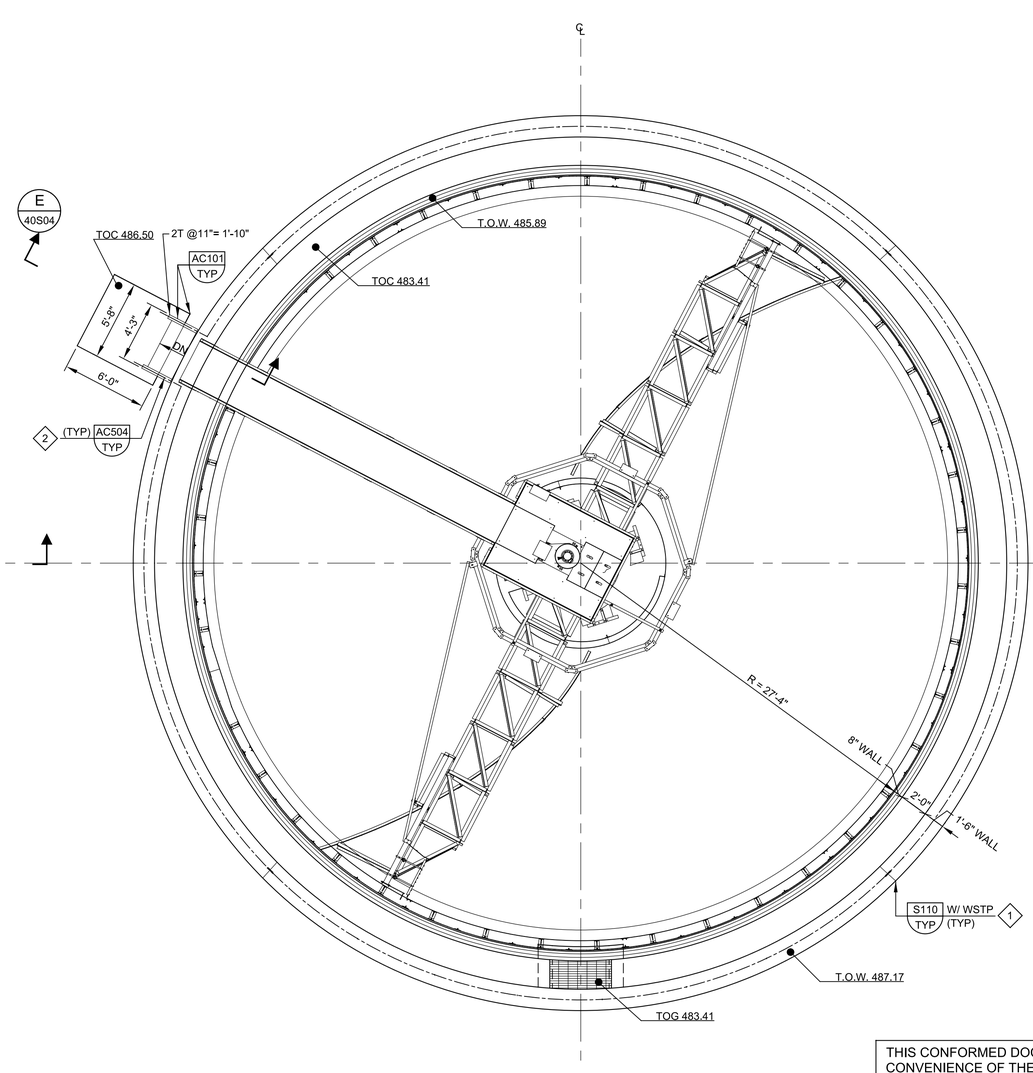

CLARIFIER 3

NOTE: CLARIFIER 3 IS IDENTICAL TO CLARIFIER 2.

B UPPER PLAN

SCALE: 3/16" = 1'-0"
FILE: 10976A1040S102

GENERAL NOTES:

1. FOR GENERAL STRUCTURAL NOTES SEE DWG NO. 00GS01.
2. LIVE LOAD = 100 PSF.
3. FOR ADDITIONAL REINFORCEMENT REQUIREMENT SEE S102/TYP.
4. FOR LOCATIONS AND ELEVATIONS OF PIPE PENETRATIONS, SEE MECHANICAL DRAWINGS. REINFORCE ALL PENETRATIONS PER S180/TYP.
5. VERIFY COORDINATES WITH CIVIL DRAWINGS.

KEY NOTES:

1. LOCATE CONSTRUCTION JOINTS TO CLEAR ALL PIPES IN WALL.
2. ALL HANDRAILS SHALL BE ALUMINUM UNLESS SPECIFIED OTHERWISE.

THIS CONFORMED DOCUMENT IS RELEASED FOR THE CONVENIENCE OF THE CONTRACTOR UNDER THE AUTHORITY OF:

DANNY M HURTADO, P.E.
TX LIC NO. 104266

11-01-22
DATE

SEE DISCLAIMER FOR LIMITATIONS OF USE.

CONTRACT DOCUMENTS DATED JUNE 10, 2022, AS PART OF THE BIDDING DOCUMENTS (DRAWINGS AND SPECIFICATIONS) AND SUBSEQUENTLY ISSUED ADDENDA HAVE BEEN MERGED INTO ONE CONFORMING SET OF DOCUMENTS FOR THE CONVENIENCE OF THE CONTRACTOR. IF INCONSISTENCIES OR AMBIGUITIES BETWEEN "CONFORMED" DOCUMENTS AND CONTRACT DOCUMENTS ARE FOUND, THE CONTRACT DOCUMENTS SHALL GOVERN.

REV	DATE	BY	DESCRIPTION
			CONFORMED DOCUMENTS

DESIGNED KMD
DRAWN JLH
CHECKED JDS
DATE NOVEMBER 2022

** ORIGINAL SEALED BY KWASI DUOSE 06-10-22 TX PE 100650 **

carollo®
TBPELS No. F-882

CITY OF AUSTIN
FOUNDED 1839

CITY OF AUSTIN

CITY OF AUSTIN
WILD HORSE RANCH WWTP EXPANSION
STRUCTURAL
CLARIFIER 2 AND 3
UPPER PLAN

VERIFY SCALES
BAR IS ONE INCH ON ORIGINAL DRAWING
0 1"
IF NOT ONE INCH ON THIS SHEET, ADJUST SCALES ACCORDINGLY

JOB NO. 10976A.00
DRAWING NO. 40S02
SHEET NO. 353 OF 464

Plot Date: 10-OCT-2022 1:22:00 PM
User: LDietzel
PlotScale: 1:1
DesignScript: Carollo_Std_Pen_v0905.pen
ColorTable: gshade.ctb
Model: Layout1
LAST SAVED BY: eratcliff

GENERAL NOTES:

1. FOR GENERAL STRUCTURAL NOTES SEE DWG NO. 00GS01.
2. LIVE LOAD = 100 PSF.
3. FOR ADDITIONAL REINFORCEMENT REQUIREMENT SEE S102/TYP.
4. FOR LOCATIONS AND ELEVATIONS OF PIPE PENETRATIONS, SEE MECHANICAL DRAWINGS, REINFORCE ALL PENETRATIONS PER S180/TYP.
5. VERIFY COORDINATES WITH CIVIL DRAWINGS.

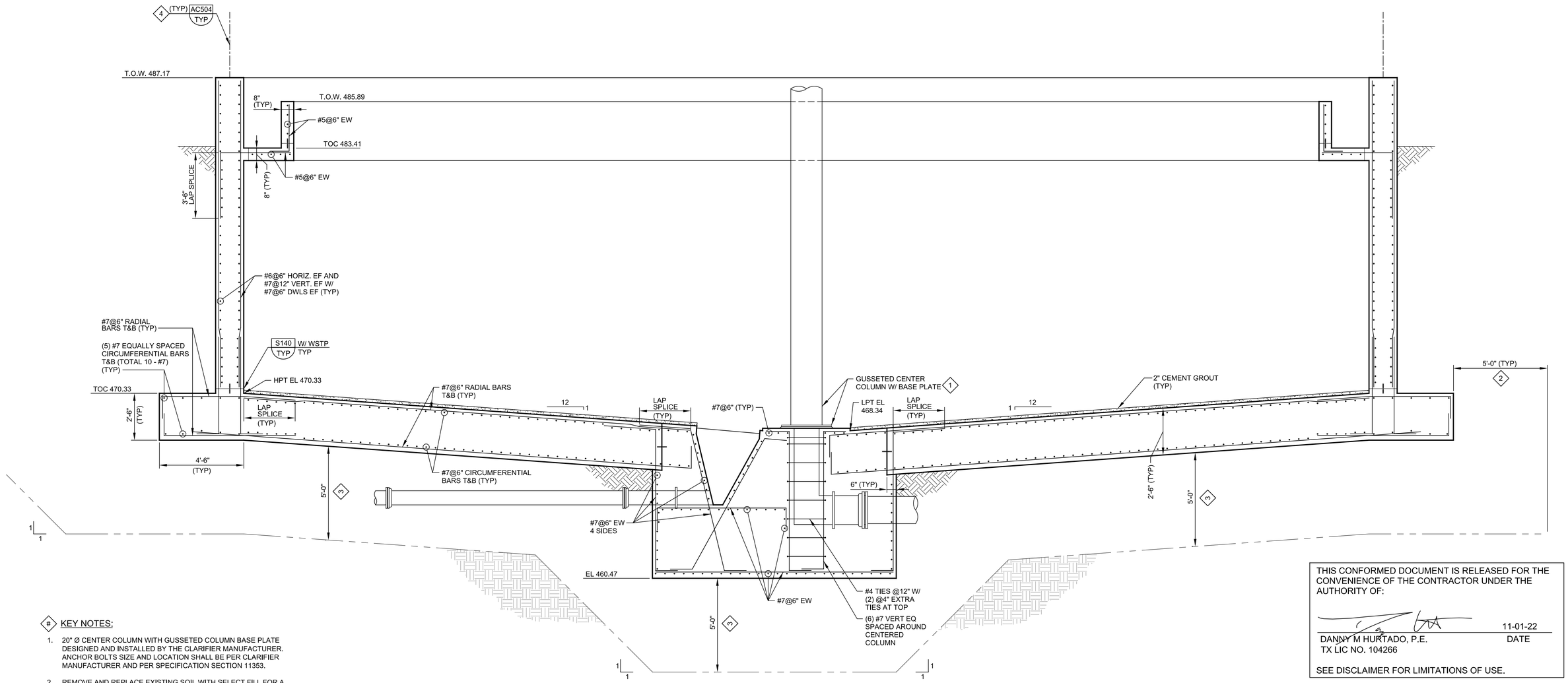

C 40S01 **SECTION**
SCALE: 3/8" = 1'-0"
FILE: 10976A1040S301

KEY NOTES:

1. 20" Ø CENTER COLUMN WITH GUSSETED COLUMN BASE PLATE DESIGNED AND INSTALLED BY THE CLARIFIER MANUFACTURER. ANCHOR BOLTS SIZE AND LOCATION SHALL BE PER CLARIFIER MANUFACTURER AND PER SPECIFICATION SECTION 11353.
2. REMOVE AND REPLACE EXISTING SOIL WITH SELECT FILL FOR A MINIMUM OF 5'-0" OUTSIDE THE STRUCTURE FOOTPRINT.
3. FOR FOUNDATION AND SUBGRADE PREPARATION, SEE GENERAL STRUCTURAL NOTES DRAWING 00GS01.
4. ALL HANDRAILS SHALL BE ALUMINUM UNLESS SPECIFIED OTHERWISE.

THIS CONFORMED DOCUMENT IS RELEASED FOR THE CONVENIENCE OF THE CONTRACTOR UNDER THE AUTHORITY OF:

DANNY M HURTADO, P.E.
TX LIC NO. 104266
11-01-22
DATE

SEE DISCLAIMER FOR LIMITATIONS OF USE.

CONTRACT DOCUMENTS DATED JUNE 10, 2022, AS PART OF THE BIDDING DOCUMENTS (DRAWINGS AND SPECIFICATIONS) AND SUBSEQUENTLY ISSUED ADDENDA HAVE BEEN MERGED INTO ONE CONFORMING SET OF DOCUMENTS FOR THE CONVENIENCE OF THE CONTRACTOR. IF INCONSISTENCIES OR AMBIGUITIES BETWEEN "CONFORMED" DOCUMENTS AND CONTRACT DOCUMENTS ARE FOUND, THE CONTRACT DOCUMENTS SHALL GOVERN.

REV	DATE	BY	DESCRIPTION
			CONFORMED DOCUMENTS

DESIGNED KMD
DRAWN JLH
CHECKED JDS
DATE NOVEMBER 2022

** ORIGINAL SEALED BY KWASI DUOSE 06-10-22 TX PE 100650 **

carollo® TBPELS No. F-882

CITY OF AUSTIN — FOUNDED 1839

CITY OF AUSTIN

CITY OF AUSTIN
WILD HORSE RANCH WWTP EXPANSION
STRUCTURAL
CLARIFIER 2 AND 3
SECTIONS AND DETAILS 1

VERIFY SCALES
BAR IS ONE INCH ON ORIGINAL DRAWING
0 1"
IF NOT ONE INCH ON THIS SHEET, ADJUST SCALES ACCORDINGLY

JOB NO. 10976A.00
DRAWING NO. 40S03
SHEET NO. 354 OF 464

Plot Date: 10-OCT-2022 1:23:43 PM
User: LDietzel
PlotScale: 1:1
DesignScript: Carollo_Std_Pen_v0905.pen
ColorTable: gshade.ctb
Model: Layout1
LAST SAVED BY: eratcliff

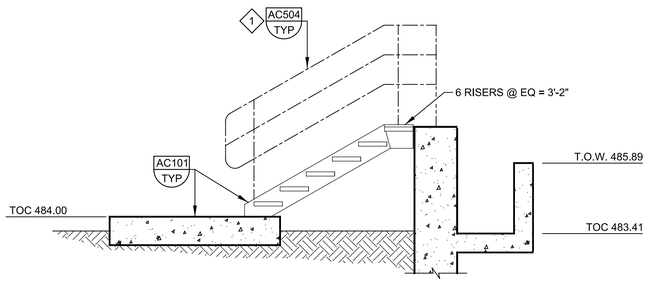

D SECTION
40S02
SCALE: 3/8" = 1'-0"
FILE: 10976A1040S302

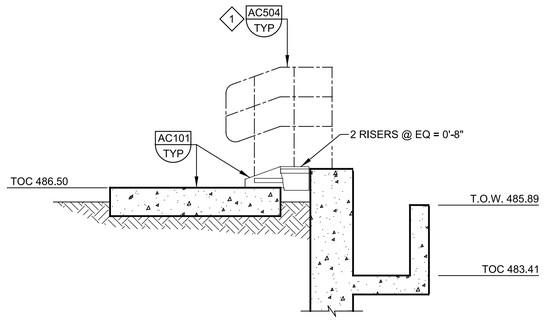

E SECTION
40S02
SCALE: 3/8" = 1'-0"
FILE: 10976A1040S304

THIS CONFORMED DOCUMENT IS RELEASED FOR THE CONVENIENCE OF THE CONTRACTOR UNDER THE AUTHORITY OF:

DANNY M HURTADO, P.E.
TX LIC NO. 104266

11-01-22
DATE

SEE DISCLAIMER FOR LIMITATIONS OF USE.

CONTRACT DOCUMENTS DATED JUNE 10, 2022, AS PART OF THE BIDDING DOCUMENTS (DRAWINGS AND SPECIFICATIONS) AND SUBSEQUENTLY ISSUED ADDENDA HAVE BEEN MERGED INTO ONE CONFORMING SET OF DOCUMENTS FOR THE CONVENIENCE OF THE CONTRACTOR. IF INCONSISTENCIES OR AMBIGUITIES BETWEEN "CONFORMED" DOCUMENTS AND CONTRACT DOCUMENTS ARE FOUND, THE CONTRACT DOCUMENTS SHALL GOVERN.

GENERAL NOTES:

1. FOR GENERAL STRUCTURAL NOTES SEE DWG NO. 00GS01.
2. LIVE LOAD = 100 PSF.
3. FOR ADDITIONAL REINFORCEMENT REQUIREMENT SEE S102/TYP.
4. FOR LOCATIONS AND ELEVATIONS OF PIPE PENETRATIONS, SEE MECHANICAL DRAWINGS, REINFORCE ALL PENETRATIONS PER S180/TYP.
5. VERIFY COORDINATES WITH CIVIL DRAWINGS.

KEY NOTES:

1. ALL HANDRAILS SHALL BE ALUMINUM UNLESS SPECIFIED OTHERWISE.
2. 20" Ø CENTER COLUMN WITH GUSSETED COLUMN BASE PLATE DESIGNED AND INSTALLED BY THE CLARIFIER MANUFACTURER. ANCHOR BOLTS SIZE AND LOCATION SHALL BE PER CLARIFIER MANUFACTURER AND PER SPECIFICATION SECTION 11353.
3. FOR FOUNDATION AND SUBGRADE PREPARATION, SEE GENERAL STRUCTURAL NOTES DRAWING 00GS01.

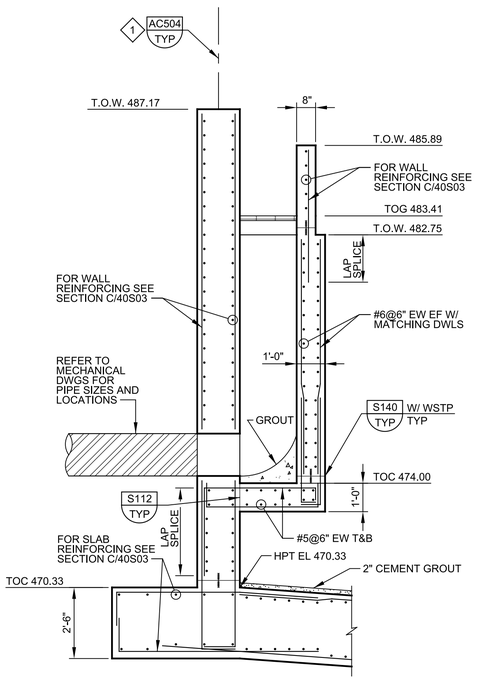

F SECTION
40S01
SCALE: 3/8" = 1'-0"
FILE: 10976A1040S308

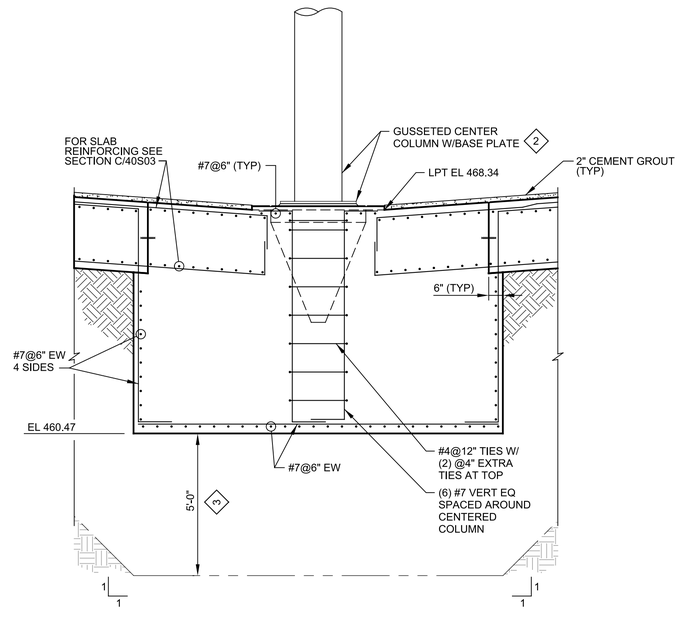

G SECTION
40S01
SCALE: 3/8" = 1'-0"
FILE: 10976A1040S309

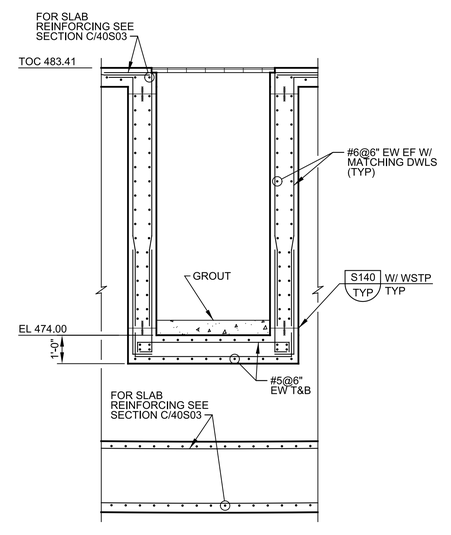

H SECTION
40S01
SCALE: 3/8" = 1'-0"
FILE: 10976A1040S310

REV	DATE	BY	DESCRIPTION
			CONFORMED DOCUMENTS

DESIGNED KMD
DRAWN JLH
CHECKED JDS
DATE NOVEMBER 2022

** ORIGINAL SEALED BY KWASI DUOSE 06-10-22 TX PE 100650 **

carollo®
TBPELS No. F-882

CITY OF AUSTIN
FOUNDED 1839
CITY OF AUSTIN

CITY OF AUSTIN
WILD HORSE RANCH WWTP EXPANSION
STRUCTURAL
CLARIFIER 2 AND 3
SECTIONS AND DETAILS 2

VERIFY SCALES
BAR IS ONE INCH ON ORIGINAL DRAWING
0 1"
IF NOT ONE INCH ON THIS SHEET, ADJUST SCALES ACCORDINGLY

JOB NO. 10976A.00
DRAWING NO. 40S04
SHEET NO. 355 OF 464

Plot Date: 10-OCT-2022 1:25:27 PM
User: LDietzel
DesignScript: Carollo_Std_Pen_v0905.pen PlotScale: 1:1
ColorTable: gshade.ctb
Model: Layout1
LAST SAVED BY: eratcliff

GENERAL NOTES:

1. FOR GENERAL STRUCTURAL NOTES SEE DWG NO. 00GS01.
2. LIVE LOAD = 100 PSF.
3. FOR ADDITIONAL REINFORCEMENT REQUIREMENT SEE S102/TYP.
4. FOR LOCATIONS AND ELEVATIONS OF PIPE PENETRATIONS, SEE MECHANICAL DRAWINGS, REINFORCE ALL PENETRATIONS PER S180/TYP.
5. VERIFY COORDINATES WITH CIVIL DRAWINGS.

(#) KEY NOTES:

1. LOCATE CONSTRUCTION JOINTS TO CLEAR ALL PIPES IN WALL.
2. 20" Ø CENTER COLUMN WITH GUSSETED COLUMN BASE PLATE DESIGNED AND INSTALLED BY THE CLARIFIER MANUFACTURER. ANCHOR BOLTS SIZE AND LOCATION SHALL BE PER CLARIFIER MANUFACTURER AND PER SPECIFICATION SECTION 11353.

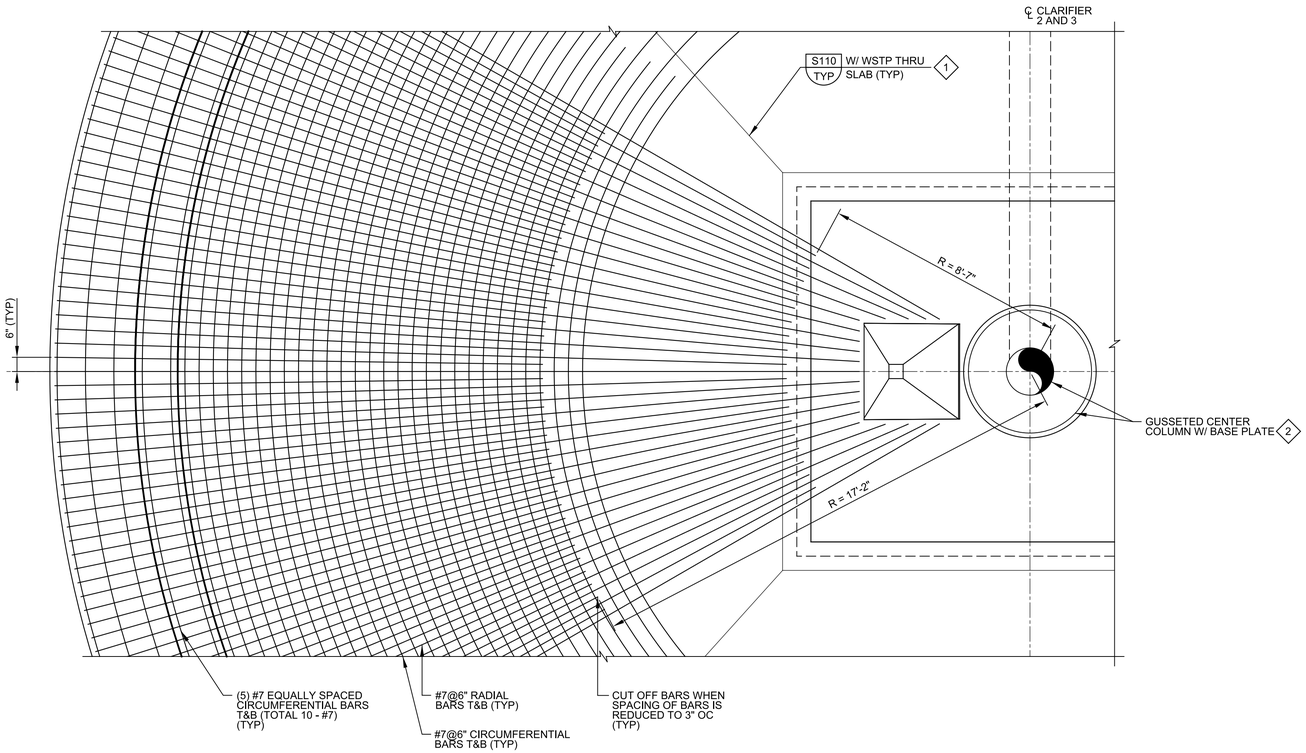

1 DETAIL (40S01)
SCALE: 3/8" = 1'-0"
FILE: 10976A1040S101

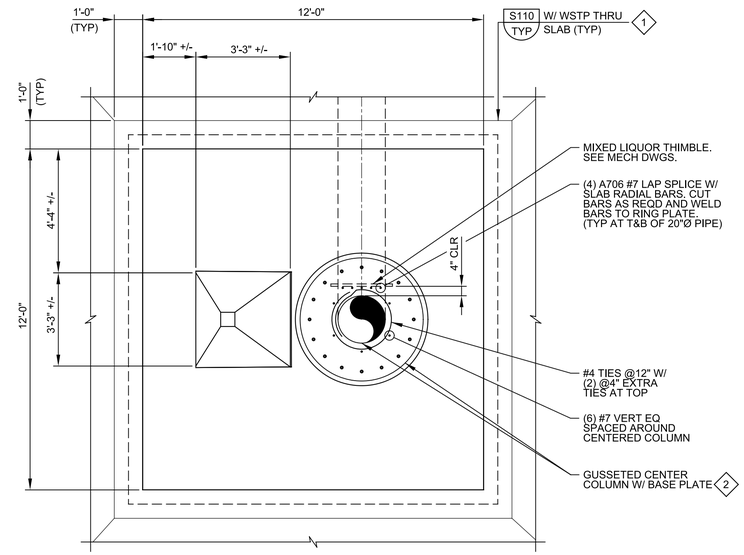

2 DETAIL (40S01)
SCALE: 3/8" = 1'-0"
FILE: 10976A1040S307

THIS CONFORMED DOCUMENT IS RELEASED FOR THE CONVENIENCE OF THE CONTRACTOR UNDER THE AUTHORITY OF:

DANNY M HURTADO, P.E.
TX LIC NO. 104266

11-01-22
DATE

SEE DISCLAIMER FOR LIMITATIONS OF USE.

CONTRACT DOCUMENTS DATED JUNE 10, 2022, AS PART OF THE BIDDING DOCUMENTS (DRAWINGS AND SPECIFICATIONS) AND SUBSEQUENTLY ISSUED ADDENDA HAVE BEEN MERGED INTO ONE CONFORMING SET OF DOCUMENTS FOR THE CONVENIENCE OF THE CONTRACTOR. IF INCONSISTENCIES OR AMBIGUITIES BETWEEN "CONFORMED" DOCUMENTS AND CONTRACT DOCUMENTS ARE FOUND, THE CONTRACT DOCUMENTS SHALL GOVERN.

REV	DATE	BY	DESCRIPTION
			CONFORMED DOCUMENTS

DESIGNED KMD
DRAWN JLH
CHECKED JDS
DATE NOVEMBER 2022

** ORIGINAL SEALED BY KWASI DUOSE 06-10-22 TX PE 100650 **

carollo
TBPELS No. F-882

CITY OF AUSTIN
FOUNDED 1839
CITY OF AUSTIN

CITY OF AUSTIN
WILD HORSE RANCH WWTP EXPANSION
STRUCTURAL
CLARIFIER 2 AND 3
SECTIONS AND DETAILS 3

VERIFY SCALES
BAR IS ONE INCH ON ORIGINAL DRAWING
0 1"
IF NOT ONE INCH ON THIS SHEET, ADJUST SCALES ACCORDINGLY

JOB NO. 10976A.00
DRAWING NO. 40S05
SHEET NO. 356 OF 464

Plot Date: 10-OCT-2022 1:27:01 PM
User: LDietzel
PlotScale: 1:1
DesignScript: Carollo_Std_Pen_v0905.pen
ColorTable: gshade.ctb
Model: Layout1
LAST SAVED BY: jhill

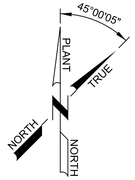

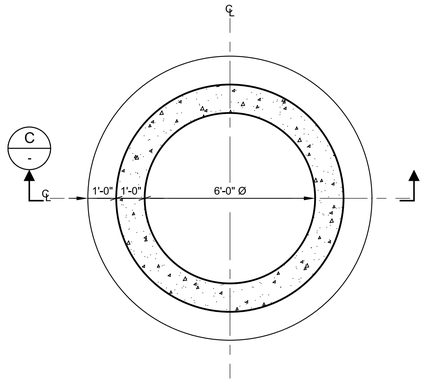

A LOWER PLAN

SCALE: 3/8" = 1'-0"
FILE: 10976A1040S105

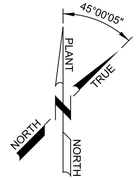

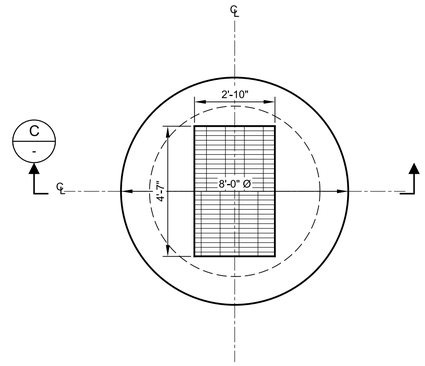

B UPPER PLAN

SCALE: 3/8" = 1'-0"
FILE: 10976A1040S106

GENERAL NOTES:

1. FOR GENERAL STRUCTURAL NOTES SEE DWG NO. 00GS01.
2. LIVE LOAD = 100 PSF.
3. FOR ADDITIONAL REINFORCEMENT REQUIREMENT SEE S102/TYP.
4. FOR LOCATIONS AND ELEVATIONS OF PIPE PENETRATIONS, SEE MECHANICAL DRAWINGS, REINFORCE ALL PENETRATIONS PER S180/TYP.
5. VERIFY COORDINATES WITH CIVIL DRAWINGS.

KEY NOTES:

1. REMOVE AND REPLACE EXISTING SOIL WITH SELECT FILL FOR A MINIMUM OF 5'-0" OUTSIDE THE STRUCTURE FOOTPRINT.
2. FOR FOUNDATION AND SUBGRADE PREPARATION, SEE GENERAL STRUCTURAL NOTES DRAWING 00GS01.

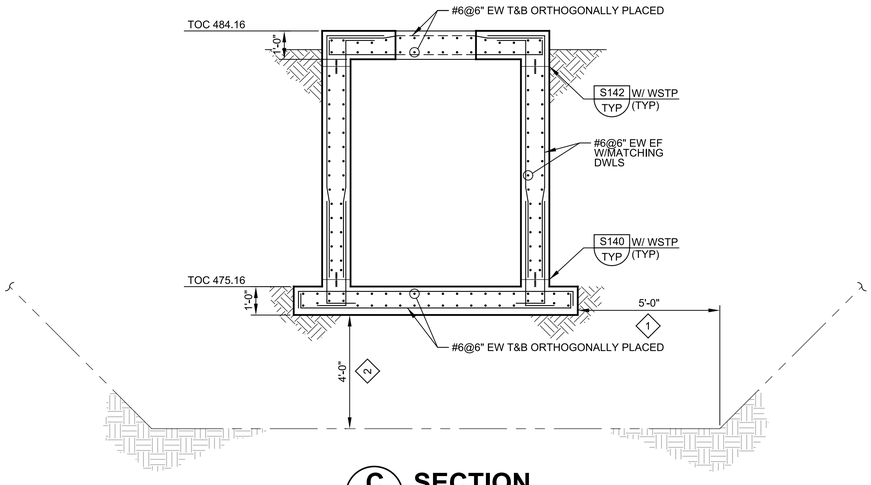

C SECTION

SCALE: 3/8" = 1'-0"
FILE: 10976A1040S305

THIS CONFORMED DOCUMENT IS RELEASED FOR THE CONVENIENCE OF THE CONTRACTOR UNDER THE AUTHORITY OF:

DANNY M HURTADO, P.E.
TX LIC NO. 104266

11-01-22
DATE

SEE DISCLAIMER FOR LIMITATIONS OF USE.

CONTRACT DOCUMENTS DATED JUNE 10, 2022, AS PART OF THE BIDDING DOCUMENTS (DRAWINGS AND SPECIFICATIONS) AND SUBSEQUENTLY ISSUED ADDENDA HAVE BEEN MERGED INTO ONE CONFORMING SET OF DOCUMENTS FOR THE CONVENIENCE OF THE CONTRACTOR. IF INCONSISTENCIES OR AMBIGUITIES BETWEEN "CONFORMED" DOCUMENTS AND CONTRACT DOCUMENTS ARE FOUND, THE CONTRACT DOCUMENTS SHALL GOVERN.

REV	DATE	BY	DESCRIPTION
			CONFORMED DOCUMENTS

DESIGNED KMD
DRAWN JLH
CHECKED JDS
DATE NOVEMBER 2022

** ORIGINAL SEALED BY KWASI DUOSE 06-10-22 TX PE 100650 **

carollo®
TBPELS No. F-882

CITY OF AUSTIN
FOUNDED 1839

CITY OF AUSTIN

CITY OF AUSTIN
WILD HORSE RANCH WWTP EXPANSION
STRUCTURAL
SCUM STATION 1
LOWER/UPPER PLANS AND SECTIONS

VERIFY SCALES
BAR IS ONE INCH ON ORIGINAL DRAWING
0 1"
IF NOT ONE INCH ON THIS SHEET, ADJUST SCALES ACCORDINGLY

JOB NO. 10976A.00
DRAWING NO. 40S06
SHEET NO. 357 OF 464

Plot Date: 10-OCT-2022 1:28:39 PM
User: LDietzel
Model: Layout1 ColorTable: gshade.ctb DesignScript: Carollo_Std_Pen_v0905.pen PlotScale: 1:1
LAST SAVED BY: jhill

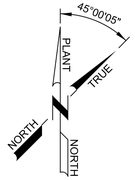

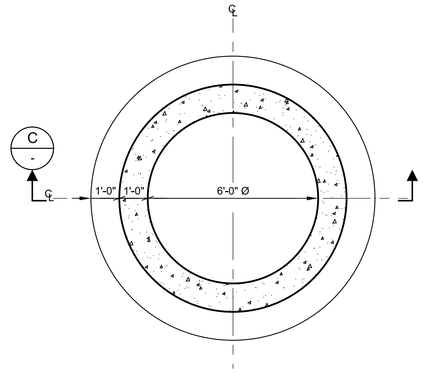

A LOWER PLAN

SCALE: 3/8" = 1'-0"
FILE: 10976A1040S107

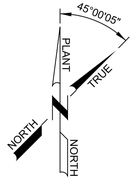

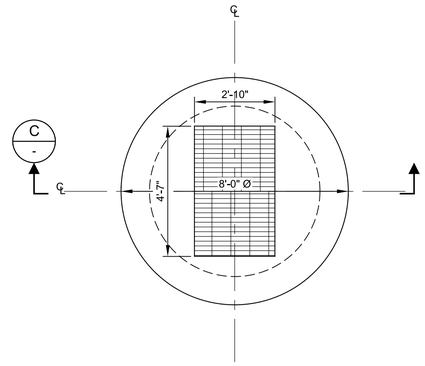

B UPPER PLAN

SCALE: 3/8" = 1'-0"
FILE: 10976A1040S108

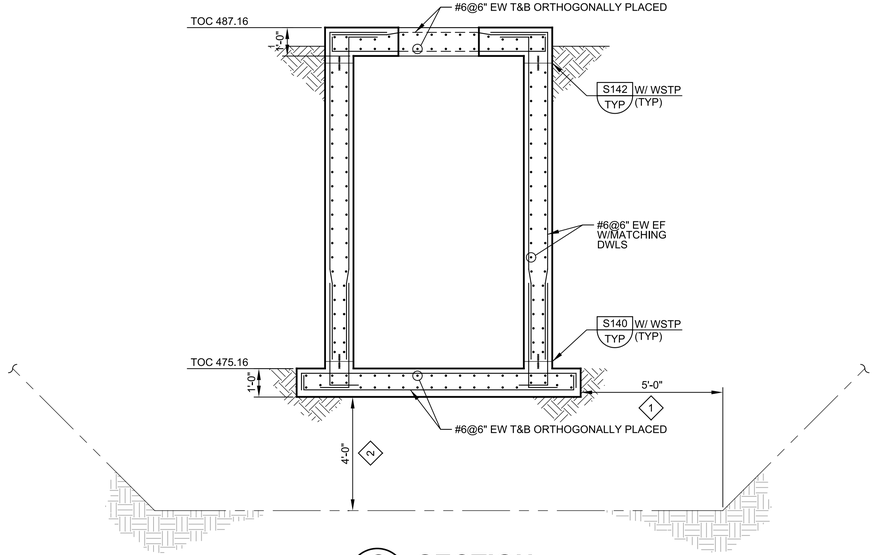

C SECTION

SCALE: 3/8" = 1'-0"
FILE: 10976A1040S306

GENERAL NOTES:

1. FOR GENERAL STRUCTURAL NOTES SEE DWG NO. 00GS01.
2. LIVE LOAD = 100 PSF.
3. FOR ADDITIONAL REINFORCEMENT REQUIREMENT SEE S102/TYP.
4. FOR LOCATIONS AND ELEVATIONS OF PIPE PENETRATIONS, SEE MECHANICAL DRAWINGS, REINFORCE ALL PENETRATIONS PER S180/TYP.
5. VERIFY COORDINATES WITH CIVIL DRAWINGS.

KEY NOTES:

1. REMOVE AND REPLACE EXISTING SOIL WITH SELECT FILL FOR A MINIMUM OF 5'-0" OUTSIDE THE STRUCTURE FOOTPRINT.
2. FOR FOUNDATION AND SUBGRADE PREPARATION, SEE GENERAL STRUCTURAL NOTES DRAWING 00GS01.

THIS CONFORMED DOCUMENT IS RELEASED FOR THE CONVENIENCE OF THE CONTRACTOR UNDER THE AUTHORITY OF:

DANNY M HURTADO, P.E.
TX LIC NO. 104266

11-01-22
DATE

SEE DISCLAIMER FOR LIMITATIONS OF USE.

CONTRACT DOCUMENTS DATED JUNE 10, 2022, AS PART OF THE BIDDING DOCUMENTS (DRAWINGS AND SPECIFICATIONS) AND SUBSEQUENTLY ISSUED ADDENDA HAVE BEEN MERGED INTO ONE CONFORMING SET OF DOCUMENTS FOR THE CONVENIENCE OF THE CONTRACTOR. IF INCONSISTENCIES OR AMBIGUITIES BETWEEN "CONFORMED" DOCUMENTS AND CONTRACT DOCUMENTS ARE FOUND, THE CONTRACT DOCUMENTS SHALL GOVERN.

REV	DATE	BY	DESCRIPTION
			CONFORMED DOCUMENTS

DESIGNED KMD
DRAWN JLH
CHECKED JDS
DATE NOVEMBER 2022

** ORIGINAL SEALED BY KWASI DUOSE 06-10-22 TX PE 100650 **

carollo®
TBPELS No. F-882

CITY OF AUSTIN
FOUNDED 1839

CITY OF AUSTIN

CITY OF AUSTIN
WILD HORSE RANCH WWTP EXPANSION
STRUCTURAL
SCUM STATION 2
LOWER/UPPER PLANS AND SECTIONS

VERIFY SCALES
BAR IS ONE INCH ON ORIGINAL DRAWING
0 1"
IF NOT ONE INCH ON THIS SHEET, ADJUST SCALES ACCORDINGLY

JOB NO. 10976A.00
DRAWING NO. 40S07
SHEET NO. 358 OF 464

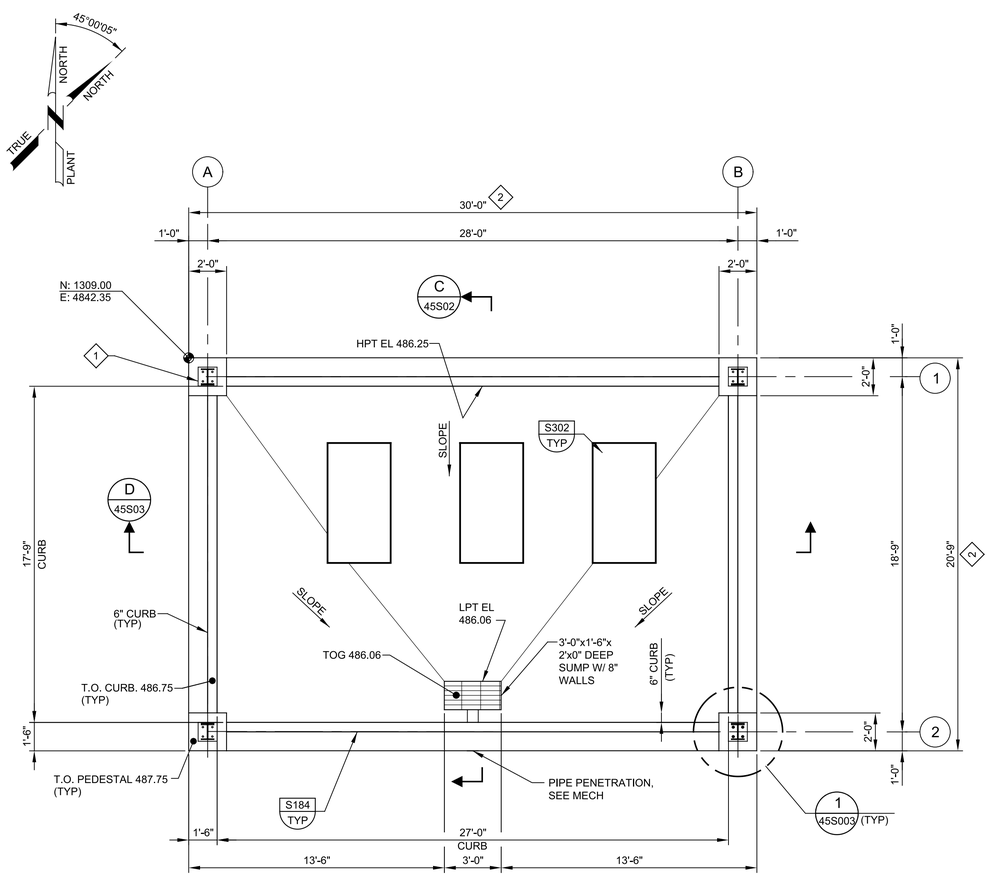

A FOUNDATION PLAN

SCALE: 1/4" = 1'-0"
FILE: 10976A1045S101

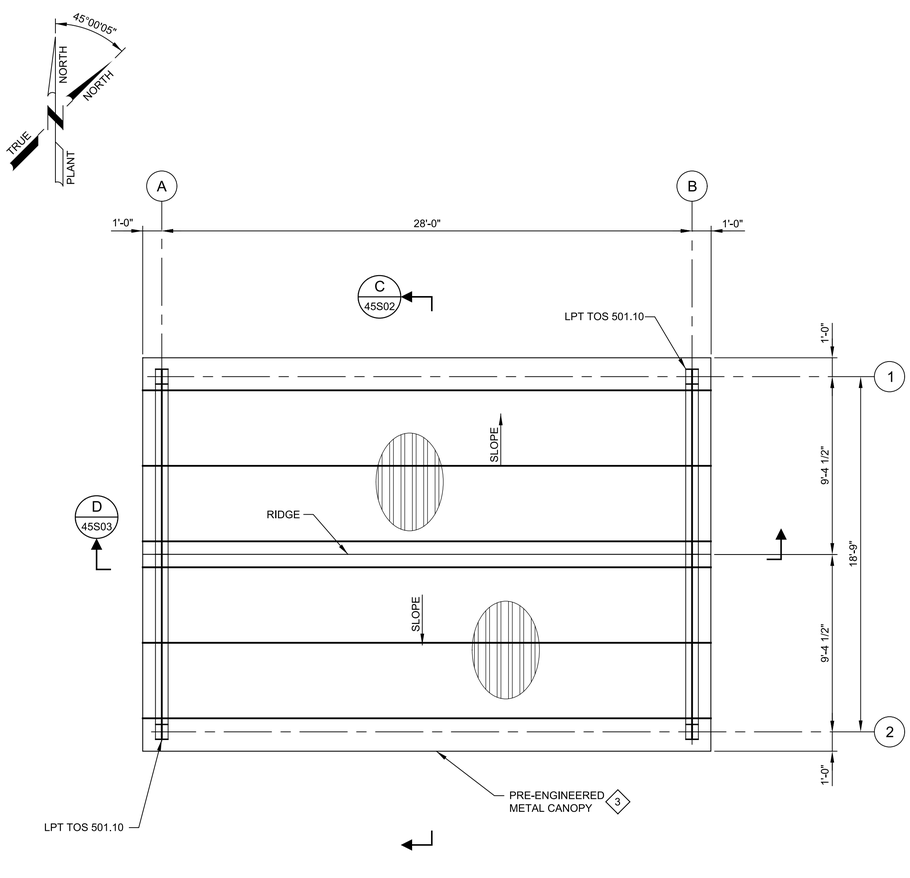

B CANOPY FRAMING PLAN

SCALE: 1/4" = 1'-0"
FILE: 10976A1045S102

GENERAL NOTES:

1. FOR GENERAL STRUCTURAL NOTES SEE DRAWING 00GS01.
2. FLOOR LIVE LOAD = 150 psf.
3. CANOPY ROOF DESIGN LIVE LOAD = 20 psf.
4. NET ALLOWABLE SOIL BEARING PRESSURE: 3,000 psf.
5. FOR OPENINGS IN CONCRETE SLABS OR WALLS SEE S180/TYP.
6. VERIFY COORDINATES WITH CIVIL DRAWINGS.

PRE-ENGINEERED METAL CANOPY NOTES:

1. CANOPY STRUCTURE AND ANCHORAGE SHALL BE DESIGNED BY THE CANOPY MANUFACTURER PER SPECIFICATION SECTION 13122. MOMENT FRAMES IN BOTH DIRECTIONS, BRACING NOT PERMITTED. FRAMES, COLUMN, BEAMS, AND OTHER CANOPY RELATED DESIGN ELEMENTS ARE DESIGNED BY THE CANOPY MANUFACTURER. LOCATED COLUMNS WHERE SHOWN. AT LEAST FOUR (4) ANCHORS RODS ARE REQUIRED PER COLUMN BASE PLATES.
2. MINIMUM BUILDING FOUNDATION DIMENSIONS AND REINFORCEMENT ARE SHOWN ON THIS DRAWING. FINAL DIMENSIONS AND REINFORCEMENT SHALL BE COORDINATED WITH THE ACTUAL BUILDING LOADS AS DETERMINED FROM THE APPROVED PRE-ENGINEERED METAL BUILDING SUBMITTAL.
3. THE PRE-ENGINEERED METAL CANOPY REACTIONS USED FOR THE FOUNDATION DESIGN HAVE BEEN ASSUMED AND ARE LISTED ON THIS SHEET.

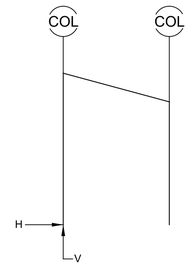

COLUMN LOAD REACTIONS (KIPS)		
LOAD GROUP	H	V
DEAD LOAD	1.0	4.0
ROOF LIVE LOAD	1.0	5.5
WIND LOAD	-6.5	-1.0

FRAME DIAGRAM W/ COLUMN SERVICE (UNFACTORED) LEVEL REACTION

THIS CONFORMED DOCUMENT IS RELEASED FOR THE CONVENIENCE OF THE CONTRACTOR UNDER THE AUTHORITY OF:

11-01-22
DANNY M HURTADO, P.E. DATE
TX LIC NO. 104266

SEE DISCLAIMER FOR LIMITATIONS OF USE.

CONTRACT DOCUMENTS DATED JUNE 10, 2022, AS PART OF THE BIDDING DOCUMENTS (DRAWINGS AND SPECIFICATIONS) AND SUBSEQUENTLY ISSUED ADDENDA HAVE BEEN MERGED INTO ONE CONFORMING SET OF DOCUMENTS FOR THE CONVENIENCE OF THE CONTRACTOR. IF INCONSISTENCIES OR AMBIGUITIES BETWEEN "CONFORMED" DOCUMENTS AND CONTRACT DOCUMENTS ARE FOUND, THE CONTRACT DOCUMENTS SHALL GOVERN.

REV	DATE	BY	DESCRIPTION
			CONFORMED DOCUMENTS

DESIGNED AAC
DRAWN JKK
CHECKED JDS
DATE NOVEMBER 2022

** ORIGINAL SEALED BY KWASI DUOSE 06-10-22 TX PE 100650 **

carollo® TBPELS No. F-882

CITY OF AUSTIN FOUNDED 1839 **CITY OF AUSTIN**

CITY OF AUSTIN
WILD HORSE RANCH WWTP EXPANSION
STRUCTURAL
RAS PUMP STATION PLANS

VERIFY SCALES
BAR IS ONE INCH ON ORIGINAL DRAWING
0 1"
IF NOT ONE INCH ON THIS SHEET, ADJUST SCALES ACCORDINGLY

JOB NO. 10976A.00
DRAWING NO. 45S01
SHEET NO. 359 OF 464

PROJECT NO. 10976A10 FILE NAME: 10976A1045S001.dgn

Plot Date: 10-OCT-2022 1:30:12 PM
User: LDietzel
PlotScale: 1:1
DesignScript: Carollo_Std_Pen_v0905.pen
ColorTable: gshade.ctb
Model: Layout1
LAST SAVED BY: jhill

Plot Date: 10-OCT-2022 1:31:45 PM
User: LDietzel
PlotScale: 1:1
DesignScript: Carollo_Std_Pen_v0905.pen
ColorTable: gshade.ctb
Model: Layout1
LAST SAVED BY: jhill

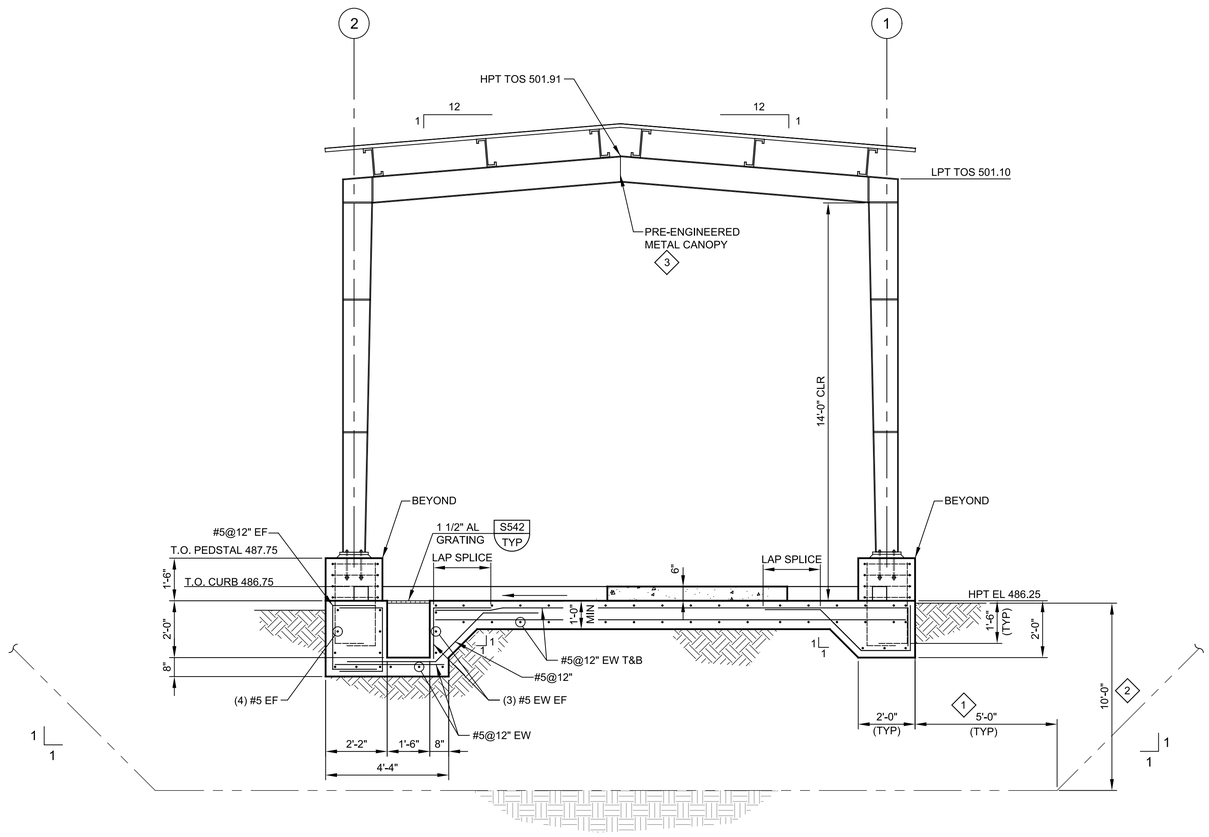

C SECTION
45S01
SCALE: 3/8" = 1'-0"
FILE: 10976A1045S302

GENERAL NOTES:

1. FOR GENERAL STRUCTURAL NOTES SEE DRAWING 00GS01.
2. FOR OPENINGS IN CONCRETE SLABS OR WALLS SEE S180/TYP.
3. VERIFY COORDINATES WITH CIVIL DRAWINGS.

KEY NOTES:

1 REMOVE AND REPLACE EXISTING SOIL WITH SELECT FILL FOR MINIMUM OF 5FT OUTSIDE THE STRUCTURE FOOTPRINT.

2 FOR FOUNDATION AND SUBGRADE PREPARATION, SEE GENERAL STRUCTURAL NOTES DRAWING 00GS01.

3 PRE-ENGINEERING METAL CANOPY BY CONTRACTOR. REFER TO PRE-ENGINEERED METAL CANOPY NOTES ON 45S01 AND SPECIFICATION SECTION 13120 FOR CRITERIA.

THIS CONFORMED DOCUMENT IS RELEASED FOR THE CONVENIENCE OF THE CONTRACTOR UNDER THE AUTHORITY OF:

DANNY M HURTADO, P.E.
TX LIC NO. 104266

11-01-22
DATE

SEE DISCLAIMER FOR LIMITATIONS OF USE.

CONTRACT DOCUMENTS DATED JUNE 10, 2022, AS PART OF THE BIDDING DOCUMENTS (DRAWINGS AND SPECIFICATIONS) AND SUBSEQUENTLY ISSUED ADDENDA HAVE BEEN MERGED INTO ONE CONFORMING SET OF DOCUMENTS FOR THE CONVENIENCE OF THE CONTRACTOR. IF INCONSISTENCIES OR AMBIGUITIES BETWEEN "CONFORMED" DOCUMENTS AND CONTRACT DOCUMENTS ARE FOUND, THE CONTRACT DOCUMENTS SHALL GOVERN.

REV	DATE	BY	DESCRIPTION
			CONFORMED DOCUMENTS

DESIGNED AAC
DRAWN JKK
CHECKED JDS
DATE NOVEMBER 2022

** ORIGINAL SEALED BY KWASI DUOSE 06-10-22 TX PE 100650 **

carollo®
TBPELS No. F-882

CITY OF AUSTIN
FOUNDED 1839

CITY OF AUSTIN

CITY OF AUSTIN
WILD HORSE RANCH WWTP EXPANSION
STRUCTURAL
RAS PUMP STATION
SECTIONS 1

VERIFY SCALES
BAR IS ONE INCH ON ORIGINAL DRAWING
0 1"
IF NOT ONE INCH ON THIS SHEET, ADJUST SCALES ACCORDINGLY

JOB NO. 10976A.00
DRAWING NO. 45S02
SHEET NO. 360 OF 464

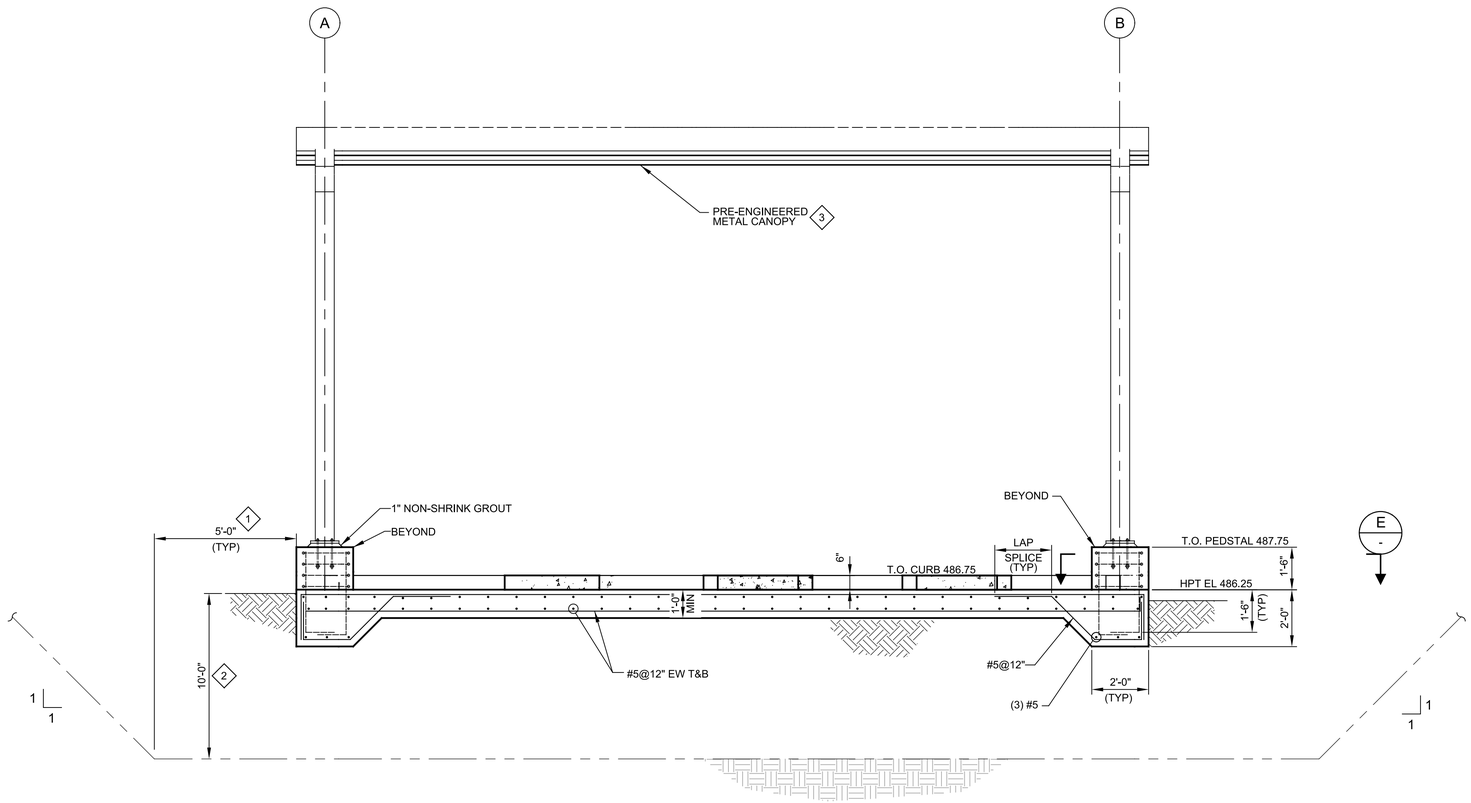

D SECTION
45S01
SCALE: 3/8" = 1'-0"
FILE: 10976A1045S0301

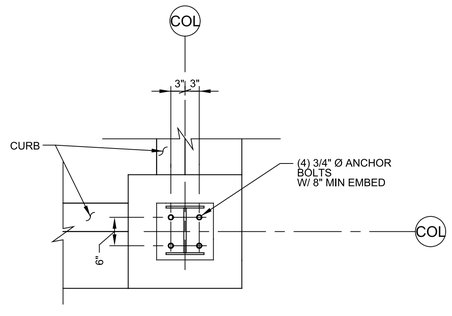

1 DETAIL
45S01
SCALE: 3/4" = 1'-0"
FILE: 10976A1045S0101

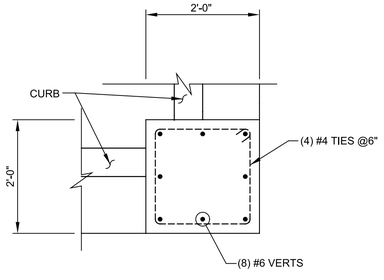

E SECTION
45S01
SCALE: 3/4" = 1'-0"
FILE: 10976A1045S0101

GENERAL NOTES:

1. FOR GENERAL STRUCTURAL NOTES SEE DRAWING 00GS01.
2. FOR OPENINGS IN CONCRETE SLABS OR WALLS SEE S180/TYP.
3. VERIFY COORDINATES WITH CIVIL DRAWINGS.

KEY NOTES:

1 REMOVE AND REPLACE EXISTING SOIL WITH SELECT FILL FOR MINIMUM OF 5FT OUTSIDE THE STRUCTURE FOOTPRINT.

2 FOR FOUNDATION AND SUBGRADE PREPARATION, SEE GENERAL STRUCTURAL NOTES DRAWING 00GS01.

3 PRE-ENGINEERING METAL BUILDING CANOPY BY CONTRACTOR. REFER TO PRE-ENGINEERED METAL CANOPY NOTES ON 45S01 AND SPECIFICATION SECTION 13120 FOR CRITERIA.

THIS CONFORMED DOCUMENT IS RELEASED FOR THE CONVENIENCE OF THE CONTRACTOR UNDER THE AUTHORITY OF:

DANNY M HURTADO, P.E.
TX LIC NO. 104266

11-01-22
DATE

SEE DISCLAIMER FOR LIMITATIONS OF USE.

CONTRACT DOCUMENTS DATED JUNE 10, 2022, AS PART OF THE BIDDING DOCUMENTS (DRAWINGS AND SPECIFICATIONS) AND SUBSEQUENTLY ISSUED ADDENDA HAVE BEEN MERGED INTO ONE CONFORMING SET OF DOCUMENTS FOR THE CONVENIENCE OF THE CONTRACTOR. IF INCONSISTENCIES OR AMBIGUITIES BETWEEN "CONFORMED" DOCUMENTS AND CONTRACT DOCUMENTS ARE FOUND, THE CONTRACT DOCUMENTS SHALL GOVERN.

REV	DATE	BY	DESCRIPTION
			CONFORMED DOCUMENTS

DESIGNED AAC
DRAWN JKK
CHECKED JDS
DATE NOVEMBER 2022

** ORIGINAL SEALED BY KWASI DUOSE 06-10-22 TX PE 100650 **

carollo®
TBPELS No. F-882

CITY OF AUSTIN

CITY OF AUSTIN
WILD HORSE RANCH WWTP EXPANSION
STRUCTURAL
RAS PUMP STATION SECTIONS 2

VERIFY SCALES
BAR IS ONE INCH ON ORIGINAL DRAWING
0 1"
IF NOT ONE INCH ON THIS SHEET, ADJUST SCALES ACCORDINGLY

JOB NO. 10976A.00
DRAWING NO. 45S03
SHEET NO. 361 OF 464

PROJECT NO. 10976A10 FILE NAME: 10976A1045S003.dgn

PlotScale: 1:1 DesignScript: Carollo_Std_Pen_v0905.pen ColorTable: gshade.ctb Model: Layout1 LAST SAVED BY: denriquez

Plot Date: 10-OCT-2022 1:34:59 PM
User: LDietzel
Model: Layout1 ColorTable: gshade.ctb DesignScript: Carollo_Std_Pen_v0905.pen PlotScale: 1:1
LAST SAVED BY: jhill

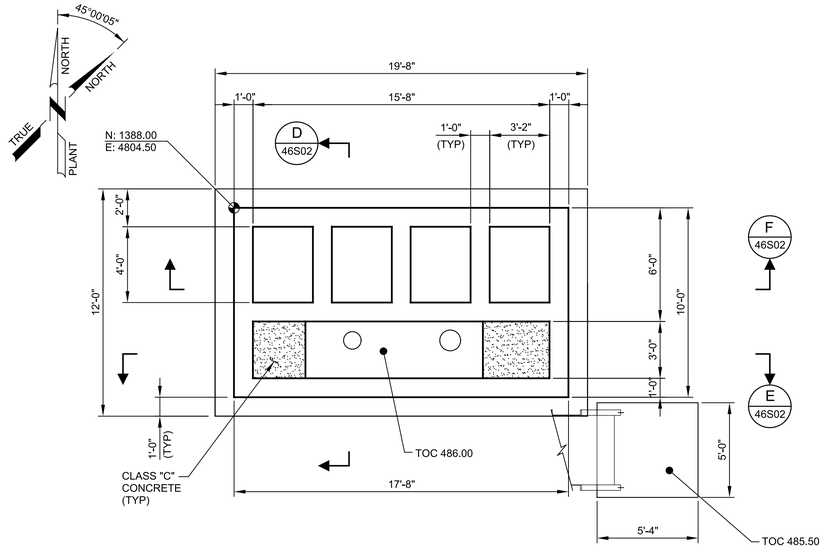

A LOWER PLAN
SCALE: 1/4" = 1'-0"
FILE: 10976A1046S0101

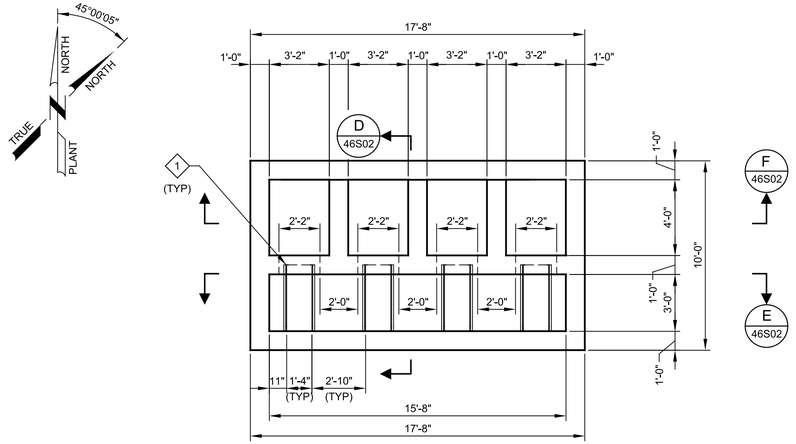

B INTERMEDIATE PLAN
SCALE: 1/4" = 1'-0"
FILE: 10976A1046S0103

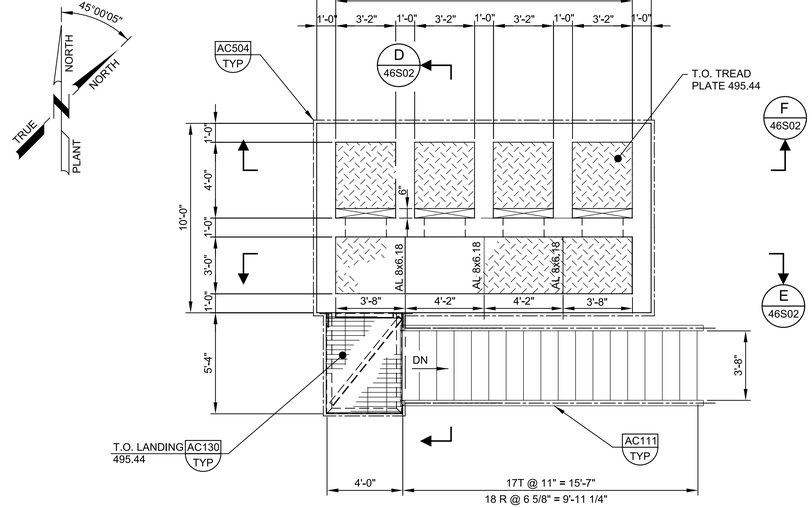

C UPPER PLAN
SCALE: 1/4" = 1'-0"
FILE: 10976A1046S0102

GENERAL NOTES:

1. FOR GENERAL STRUCTURAL NOTES SEE DRAWING 00GS01.
2. LIVE LOAD = 100 PSF.
3. FOR OPENINGS IN CONCRETE SLABS OR WALLS SEE S180/TYP.
4. VERIFY COORDINATES WITH CIVIL DRAWINGS.

KEY NOTES:

1 COORDINATE OPENING DIMENSIONS AND LOCATION WITH TROUGH MANUFACTURER TO ENSURE PROPER SUPPORT AND WEIR ELEVATION. THE OPENING SHALL PROVIDE A MINIMUM OF 4 INCHES SPACE AROUND TROUGH. OPENING IN WALL SHALL BE FILLED WITH GROUT AFTER TROUGH IS POSITIONED AND LEVELED.

THIS CONFORMED DOCUMENT IS RELEASED FOR THE CONVENIENCE OF THE CONTRACTOR UNDER THE AUTHORITY OF:

11-01-22

DANNY M HURTADO, P.E. DATE
TX LIC NO. 104266

SEE DISCLAIMER FOR LIMITATIONS OF USE.

CONTRACT DOCUMENTS DATED JUNE 10, 2022, AS PART OF THE BIDDING DOCUMENTS (DRAWINGS AND SPECIFICATIONS) AND SUBSEQUENTLY ISSUED ADDENDA HAVE BEEN MERGED INTO ONE CONFORMING SET OF DOCUMENTS FOR THE CONVENIENCE OF THE CONTRACTOR. IF INCONSISTENCIES OR AMBIGUITIES BETWEEN "CONFORMED" DOCUMENTS AND CONTRACT DOCUMENTS ARE FOUND, THE CONTRACT DOCUMENTS SHALL GOVERN.

REV	DATE	BY	DESCRIPTION
			CONFORMED DOCUMENTS

DESIGNED AAC
DRAWN JKK
CHECKED JDS
DATE NOVEMBER 2022

** ORIGINAL SEALED BY KWASI DUOSE 06-10-22 TX PE 100650 **

carollo®
TBPELS No. F-882

CITY OF AUSTIN
FOUNDED 1839

CITY OF AUSTIN

CITY OF AUSTIN
WILD HORSE RANCH WWTP EXPANSION
STRUCTURAL
RAS SPLITTER BOX PLANS

VERIFY SCALES
BAR IS ONE INCH ON ORIGINAL DRAWING
0 1"
IF NOT ONE INCH ON THIS SHEET, ADJUST SCALES ACCORDINGLY

JOB NO. 10976A.00
DRAWING NO. 46S01
SHEET NO. 362 OF 464

PROJECT NO. 10976A10 FILE NAME: 10976A1046S001.dgn

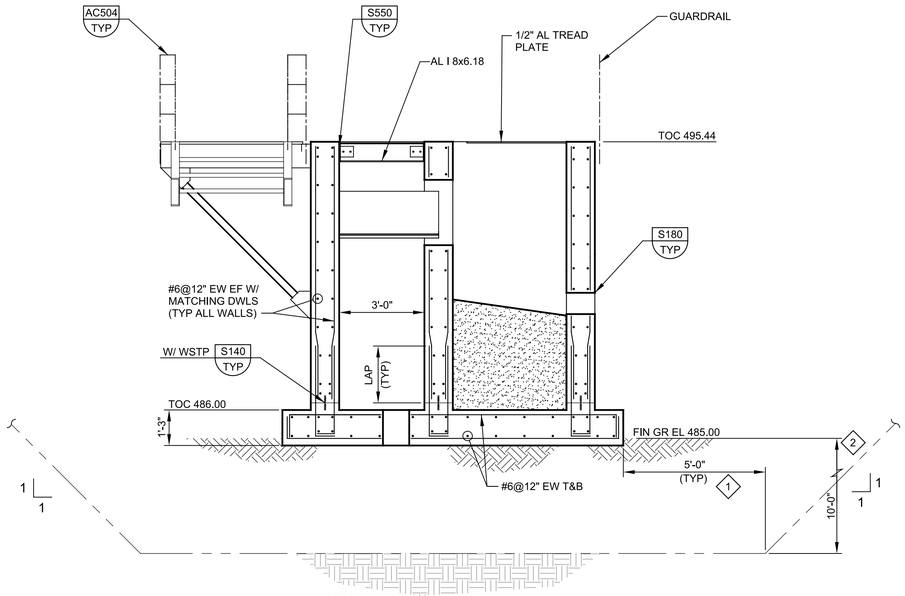

D SECTION

46S01

SCALE: 3/8" = 1'-0"
FILE: 10976A1046S0301

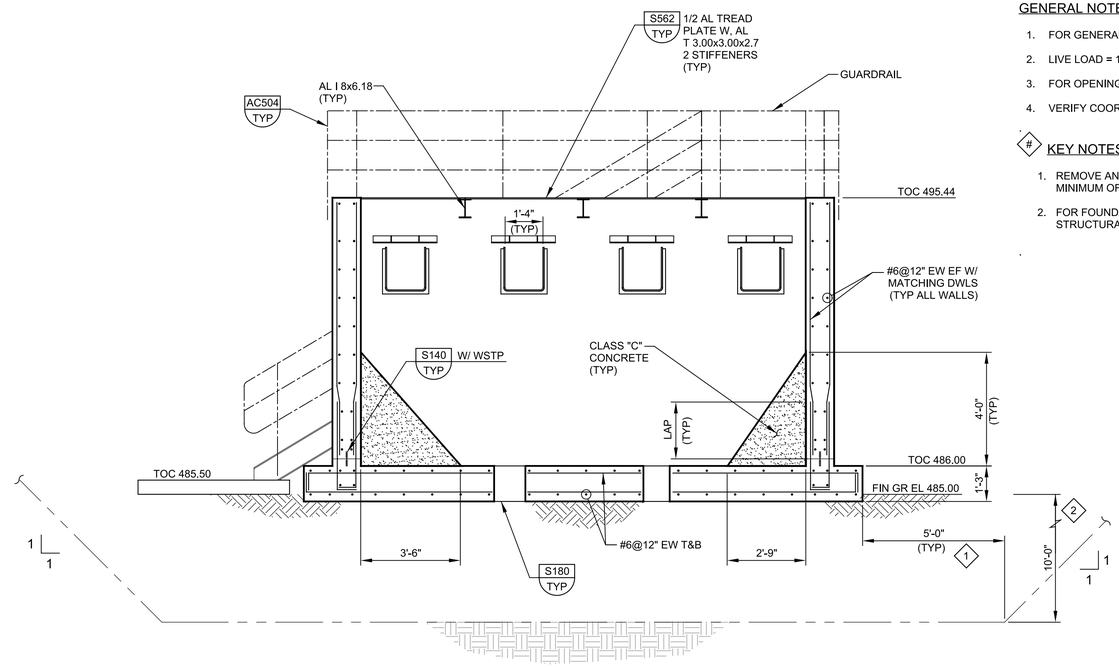

E SECTION

46S01

SCALE: 3/8" = 1'-0"
FILE: 10976A1046S0302

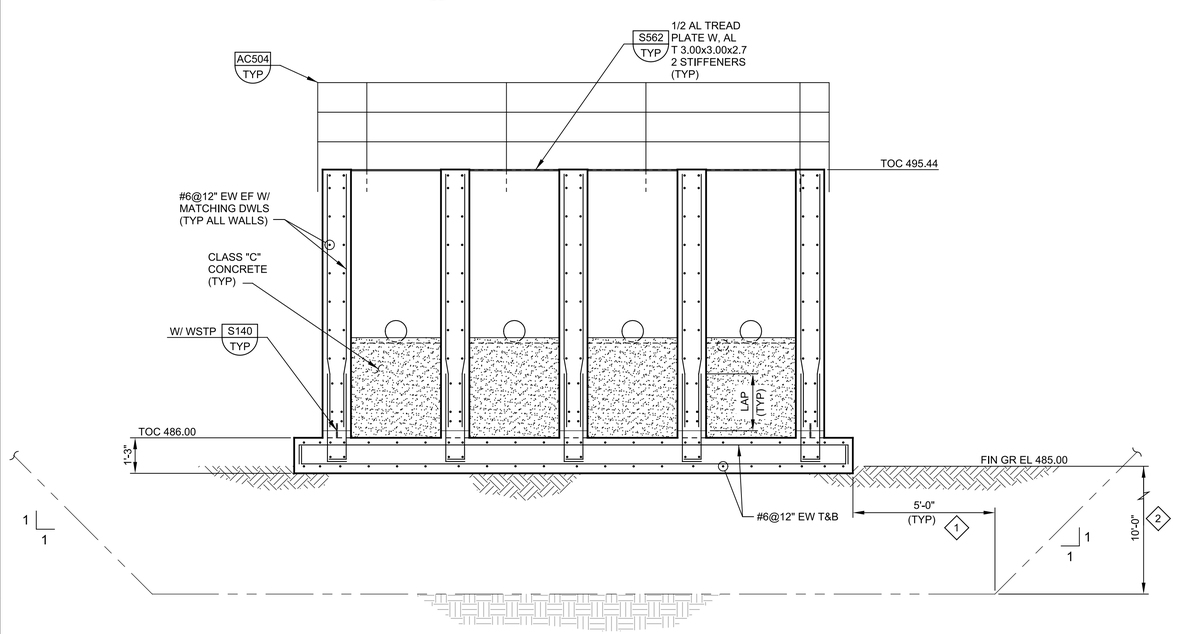

F SECTION

46S01

SCALE: 3/8" = 1'-0"
FILE: 10976A1046S0303

GENERAL NOTES:

1. FOR GENERAL STRUCTURAL NOTES SEE DRAWING 00GS01.
2. LIVE LOAD = 100 PSF.
3. FOR OPENINGS IN CONCRETE SLABS OR WALLS SEE S180/TYP.
4. VERIFY COORDINATES WITH CIVIL DRAWINGS.

KEY NOTES:

1. REMOVE AND REPLACE EXISTING SOIL WITH SELECT FILL FOR MINIMUM OF 5FT OUTSIDE THE STRUCTURE FOOTPRINT.
2. FOR FOUNDATION AND SUBGRADE PREPARATION, SEE GENERAL STRUCTURAL NOTES DRAWING 00GS01.

THIS CONFORMED DOCUMENT IS RELEASED FOR THE CONVENIENCE OF THE CONTRACTOR UNDER THE AUTHORITY OF:

11-01-22

DANNY M HURTADO, P.E. DATE
TX LIC NO. 104266

SEE DISCLAIMER FOR LIMITATIONS OF USE.

CONTRACT DOCUMENTS DATED JUNE 10, 2022, AS PART OF THE BIDDING DOCUMENTS (DRAWINGS AND SPECIFICATIONS) AND SUBSEQUENTLY ISSUED ADDENDA HAVE BEEN MERGED INTO ONE CONFORMING SET OF DOCUMENTS FOR THE CONVENIENCE OF THE CONTRACTOR. IF INCONSISTENCIES OR AMBIGUITIES BETWEEN "CONFORMED" DOCUMENTS AND CONTRACT DOCUMENTS ARE FOUND, THE CONTRACT DOCUMENTS SHALL GOVERN.

REV	DATE	BY	DESCRIPTION
			CONFORMED DOCUMENTS

DESIGNED AAC
DRAWN JKK
CHECKED JDS
DATE NOVEMBER 2022

** ORIGINAL SEALED BY KWASI DUOSE 06-10-22 TX PE 100650 **

carollo
TBPELS No. F-882

CITY OF AUSTIN
FOUNDED 1839

CITY OF AUSTIN

CITY OF AUSTIN
WILD HORSE RANCH WWTP EXPANSION
STRUCTURAL
RAS SPLITTER BOX SECTIONS

VERIFY SCALES
BAR IS ONE INCH ON ORIGINAL DRAWING
0 1"
IF NOT ONE INCH ON THIS SHEET, ADJUST SCALES ACCORDINGLY

JOB NO. 10976A.00
DRAWING NO. 46S02
SHEET NO. 360 OF 464

PROJECT NO. 10976A10 FILE NAME: 10976A1046S002.dgn

Plot Date: 10-OCT-2022 1:36:45 PM
User: LDietzel
PlotScale: 1:1
DesignScript: Carollo_Std_Pen_v0905.pen
ColorTable: gshade.ctb
Model: Layout1
LAST SAVED BY: jhill

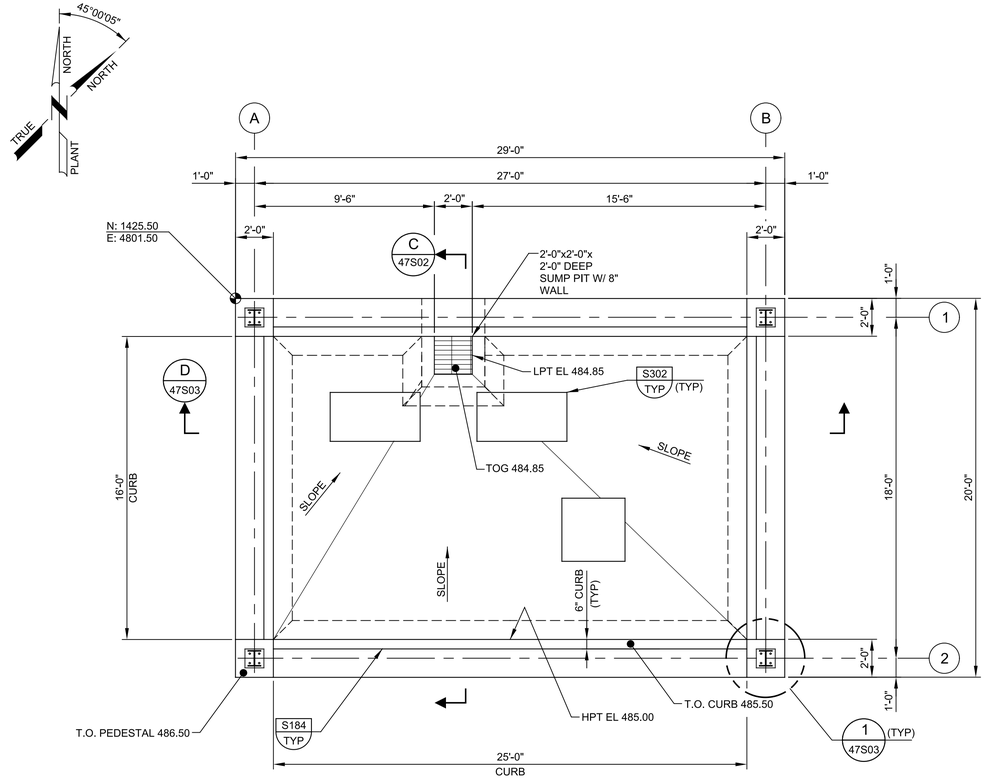

A LOWER PLAN

SCALE: 1/4" = 1'-0"
FILE: 10976A1047S0101

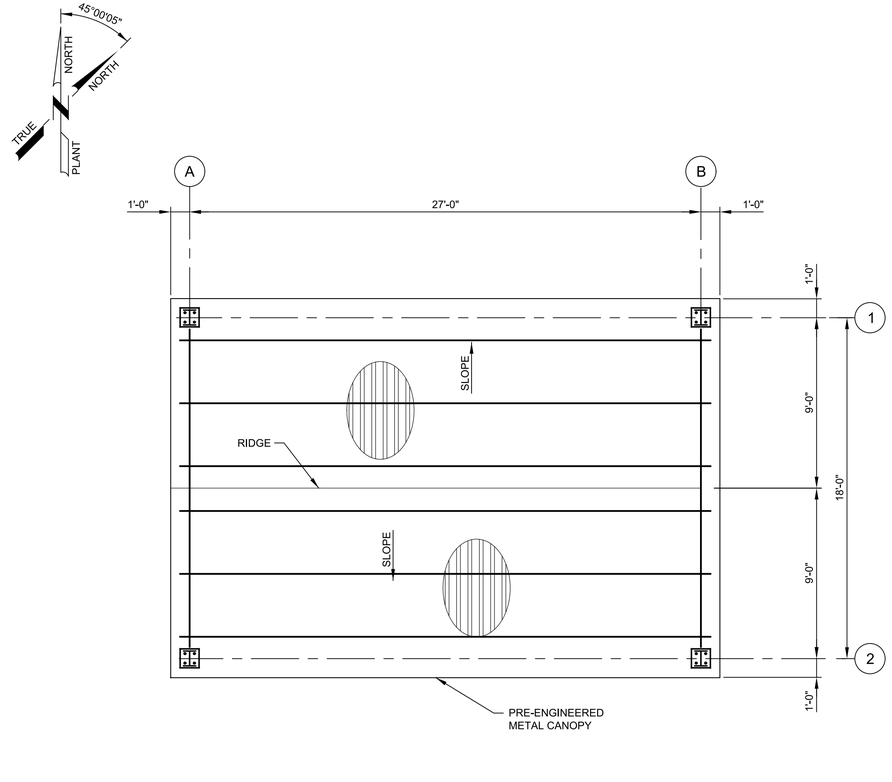

B CANOPY FRAMING PLAN

SCALE: 1/4" = 1'-0"
FILE: 10976A1047S0102

GENERAL NOTES:

1. FOR GENERAL STRUCTURAL NOTES SEE DRAWING 00GS01.
2. FLOOR LIVE LOAD = 150 PSF.
3. CANOPY ROOF DESIGN LIVE LOAD = 20 PSF.
4. NET ALLOWABLE SOIL BEARING PRESSURE: 3,000 PSF.
5. FOR OPENINGS IN CONCRETE SLABS OR WALLS SEE S180/TYP.
6. VERIFY COORDINATES WITH CIVIL DRAWINGS.

PRE-ENGINEERED METAL CANOPY NOTES:

1. CANOPY STRUCTURE AND ANCHORAGE SHALL BE DESIGNED BY THE CANOPY MANUFACTURER PER SPECIFICATION SECTION 13122. MONEMENT FRAMES IN BOTH DIRECTION, BRACING NOT PERMITTED. FRAMES, COLUMN, BEAMS, AND OTHER CANOPY RELATED DESIGN ELEMENTS ARE DESIGNED BY THE CANOPY MANUFACTURER. LOCATED COLUMNS WHERE SHOWN. AT LEAST FOUR (4) ANCHORS RODS ARE REQUIRED PER COLUMN BASE PLATES.
2. MINIMUM BUILDING FOUNDATION DIMENSIONS AND REINFORCEMENT ARE SHOWN ON THIS DRAWING. FINAL DIMENSIONS AND REINFORCEMENT SHALL BE COORDINATED WITH THE ACTUAL BUILDING LOADS AS DETERMINED FROM THE APPROVED PRE-ENGINEERED METAL BUILDING SUBMITTAL.
3. THE PRE-ENGINEERED METAL CANOPY REACTIONS USED FOR THE FOUNDATION DESIGN HAVE BEEN ASSUMED AND ARE LISTED ON THIS SHEET.

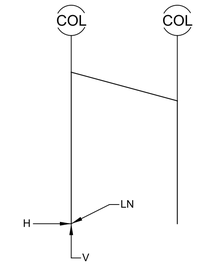

COLUMN LOAD REACTIONS (KIPS)			
LOAD GROUP	H	V	LN
DEAD LOAD	0.5	3.7	0.5
ROOF LIVE LOAD	0.8	5.3	1
WIND LOAD	-6.5	-0.8	6.5

FRAME DIAGRAM W/ COLUMN SERVICE (UNFACTORED) LEVEL REACTION

THIS CONFORMED DOCUMENT IS RELEASED FOR THE CONVENIENCE OF THE CONTRACTOR UNDER THE AUTHORITY OF:

11-01-22
DANNY M HURTADO, P.E. DATE
TX LIC NO. 104266

SEE DISCLAIMER FOR LIMITATIONS OF USE.

CONTRACT DOCUMENTS DATED JUNE 10, 2022, AS PART OF THE BIDDING DOCUMENTS (DRAWINGS AND SPECIFICATIONS) AND SUBSEQUENTLY ISSUED ADDENDA HAVE BEEN MERGED INTO ONE CONFORMING SET OF DOCUMENTS FOR THE CONVENIENCE OF THE CONTRACTOR. IF INCONSISTENCIES OR AMBIGUITIES BETWEEN "CONFORMED" DOCUMENTS AND CONTRACT DOCUMENTS ARE FOUND, THE CONTRACT DOCUMENTS SHALL GOVERN.

REV	DATE	BY	DESCRIPTION
			CONFORMED DOCUMENTS

DESIGNED AAC
DRAWN JKK
CHECKED JDS
DATE NOVEMBER 2022

** ORIGINAL SEALED BY KWASI DUOSE 06-10-22 TX PE 100650 **

carollo®
TBPELS No. F-882

CITY OF AUSTIN
FOUNDED 1839

CITY OF AUSTIN

CITY OF AUSTIN
WILD HORSE RANCH WWTP EXPANSION
STRUCTURAL
WAS PUMP STATION
PLANS

VERIFY SCALES
BAR IS ONE INCH ON ORIGINAL DRAWING
0 1"
IF NOT ONE INCH ON THIS SHEET, ADJUST SCALES ACCORDINGLY

JOB NO. 10976A.00
DRAWING NO. 47S01
SHEET NO. 364 OF 464

Plot Date: 10-OCT-2022 1:38:27 PM
User: LDietzel
PlotScale: 1:1
DesignScript: Carollo_Std_Pen_v0905.pen
ColorTable: gshade.ctb
Model: Layout1
LAST SAVED BY: jhill

PROJECT NO. 10976A10 FILE NAME: 10976A1047S001.dgn

GENERAL NOTES:

1. FOR GENERAL STRUCTURAL NOTES SEE DRAWING 00GS01.
2. FOR OPENINGS IN CONCRETE SLABS OR WALLS SEE S180/TYP.
3. VERIFY COORDINATES WITH CIVIL DRAWINGS.

KEY NOTES:

1 REMOVE AND REPLACE EXISTING SOIL WITH SELECT FILL FOR MINIMUM OF 5FT OUTSIDE THE STRUCTURE FOOTPRINT.

2 FOR FOUNDATION AND SUBGRADE PREPARATION, SEE GENERAL STRUCTURAL NOTES DRAWING 00GS01.

3 PRE-ENGINEERING METAL BUILDING INCLUDING ANCHORAGE BY CONTRACTOR. REFER TO PRE-ENGINEERED METAL CANOPY NOTES ON 45S01 AND SPECIFICATION SECTION 13122 FOR CRITERIA.

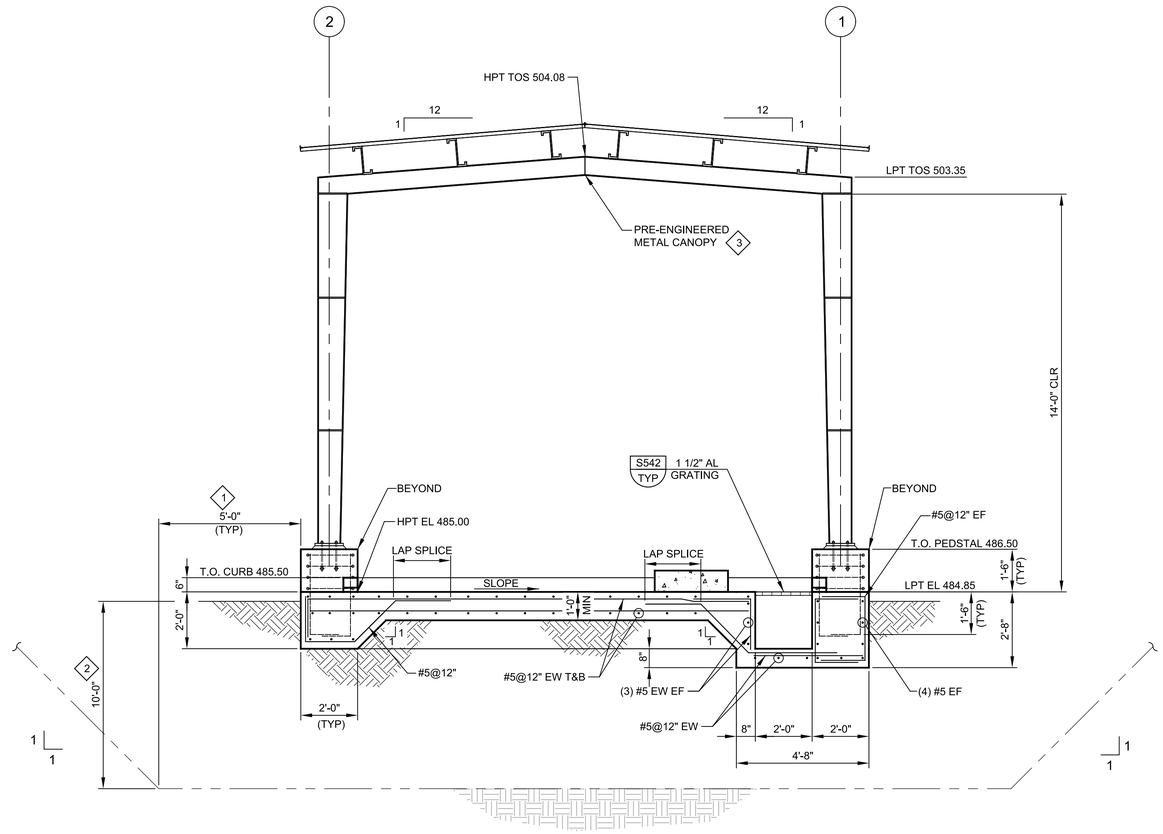

C SECTION
47S01

SCALE: 3/8" = 1'-0"
FILE: 10976A1047S0301

THIS CONFORMED DOCUMENT IS RELEASED FOR THE CONVENIENCE OF THE CONTRACTOR UNDER THE AUTHORITY OF:

11-01-22

DANNY M HURTADO, P.E. DATE
TX LIC NO. 104266

SEE DISCLAIMER FOR LIMITATIONS OF USE.

CONTRACT DOCUMENTS DATED JUNE 10, 2022, AS PART OF THE BIDDING DOCUMENTS (DRAWINGS AND SPECIFICATIONS) AND SUBSEQUENTLY ISSUED ADDENDA HAVE BEEN MERGED INTO ONE CONFORMING SET OF DOCUMENTS FOR THE CONVENIENCE OF THE CONTRACTOR. IF INCONSISTENCIES OR AMBIGUITIES BETWEEN "CONFORMED" DOCUMENTS AND CONTRACT DOCUMENTS ARE FOUND, THE CONTRACT DOCUMENTS SHALL GOVERN.

REV	DATE	BY	DESCRIPTION
			CONFORMED DOCUMENTS

DESIGNED AAC
DRAWN JKK
CHECKED JDS
DATE NOVEMBER 2022

** ORIGINAL SEALED BY KWASI DUOSE 06-10-22 TX PE 100650 **

carollo
TBPELS No. F-882

CITY OF AUSTIN
FOUNDED 1839
CITY OF AUSTIN

CITY OF AUSTIN
WILD HORSE RANCH WWTP EXPANSION
STRUCTURAL
WAS PUMP STATION
SECTIONS 1

VERIFY SCALES
BAR IS ONE INCH ON ORIGINAL DRAWING
0 1"
IF NOT ONE INCH ON THIS SHEET, ADJUST SCALES ACCORDINGLY

JOB NO. 10976A.00
DRAWING NO. 47S02
SHEET NO. 365 OF 464

PROJECT NO. 10976A10 FILE NAME: 10976A1047S002.dgn

Model: Layout1 ColorTable: gshade.ctb DesignScript: Carollo_Std_Pen_v0905.pen PlotScale: 1:1 LAST SAVED BY: jhill

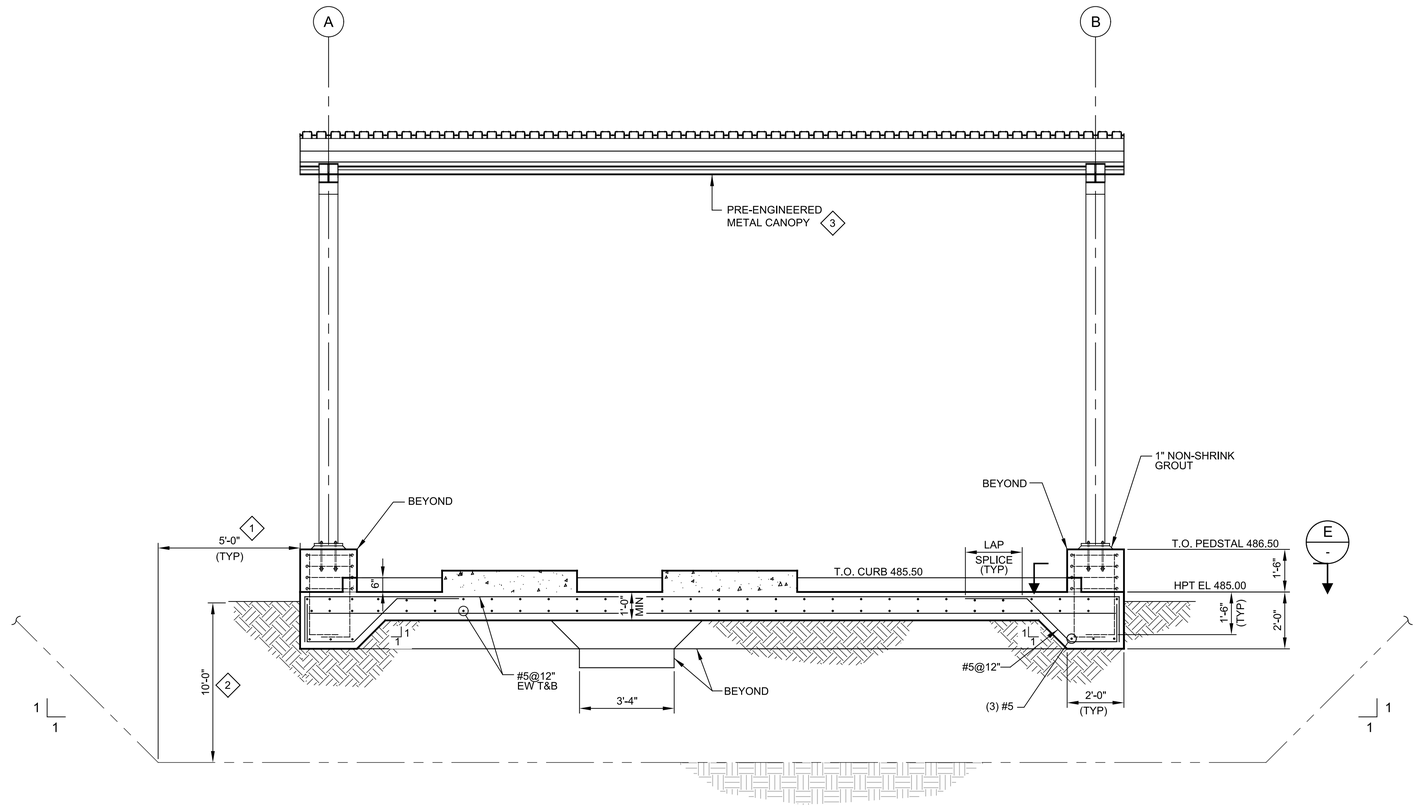

D SECTION
47S01 SCALE: 3/4" = 1'-0"
FILE: 10976A1047S0302

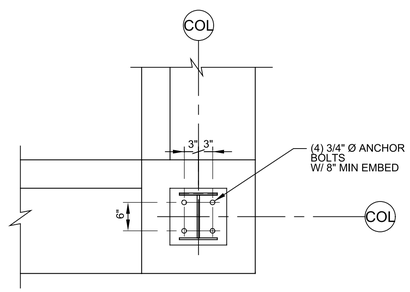

1 DETAIL
47S01 SCALE: 3/4" = 1'-0"
FILE: 10976A1047S0101

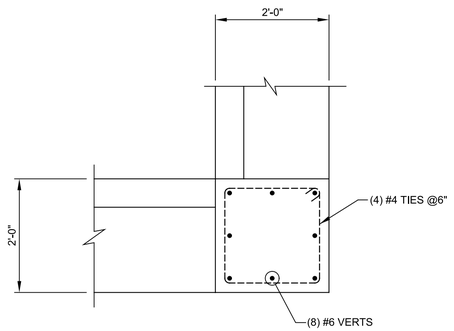

E SECTION
- SCALE: 3/4" = 1'-0"
FILE: 10976A1047S0101

GENERAL NOTES:

1. FOR GENERAL STRUCTURAL NOTES SEE DRAWING 00GS01.
2. FOR OPENINGS IN CONCRETE SLABS OR WALLS SEE S180/TYP.
3. VERIFY COORDINATES WITH CIVIL DRAWINGS.

KEY NOTES:

1 REMOVE AND REPLACE EXISTING SOIL WITH SELECT FILL FOR MINIMUM OF 5FT OUTSIDE THE STRUCTURE FOOTPRINT.

2 FOR FOUNDATION AND SUBGRADE PREPARATION, SEE GENERAL STRUCTURAL NOTES DRAWING 00GS01.

3 PRE-ENGINEERING METAL BUILDING INCLUDING ANCHORAGE BY CONTRACTOR. REFER TO PRE-ENGINEERED METAL CANOPY NOTES ON 45S01 AND SPECIFICATION SECTION 13120 FOR CRITERIA.

THIS CONFORMED DOCUMENT IS RELEASED FOR THE CONVENIENCE OF THE CONTRACTOR UNDER THE AUTHORITY OF:

DANNY M HURTADO, P.E.
TX LIC NO. 104266

11-01-22
DATE

SEE DISCLAIMER FOR LIMITATIONS OF USE.

CONTRACT DOCUMENTS DATED JUNE 10, 2022, AS PART OF THE BIDDING DOCUMENTS (DRAWINGS AND SPECIFICATIONS) AND SUBSEQUENTLY ISSUED ADDENDA HAVE BEEN MERGED INTO ONE CONFORMING SET OF DOCUMENTS FOR THE CONVENIENCE OF THE CONTRACTOR. IF INCONSISTENCIES OR AMBIGUITIES BETWEEN "CONFORMED" DOCUMENTS AND CONTRACT DOCUMENTS ARE FOUND, THE CONTRACT DOCUMENTS SHALL GOVERN.

REV	DATE	BY	DESCRIPTION
			CONFORMED DOCUMENTS

DESIGNED AAC
DRAWN JKK
CHECKED JDS
DATE NOVEMBER 2022

** ORIGINAL SEALED BY KWASI DUOSE 06-10-22 TX PE 100650 **

carollo®
TBPELS No. F-882

CITY OF AUSTIN
FOUNDED 1839

CITY OF AUSTIN

CITY OF AUSTIN
WILD HORSE RANCH WWTP EXPANSION
STRUCTURAL
WAS PUMP STATION
SECTIONS 2

VERIFY SCALES
BAR IS ONE INCH ON ORIGINAL DRAWING
0 1"
IF NOT ONE INCH ON THIS SHEET, ADJUST SCALES ACCORDINGLY

JOB NO. 10976A.00
DRAWING NO. 47S03
SHEET NO. 366 OF 464

PROJECT NO. 10976A10 FILE NAME: 10976A1047S003.dgn

LAST SAVED BY: denriquez Model: Layout1 ColorTable: gshade.ctb DesignScript: Carollo_Std_Pen_v0905.pen PlotScale: 1:1

Plot Date: 10-OCT-2022 1:46:15 PM
User: LDietzel
PlotScale: 1:1
DesignScript: Carollo_Std_Pen_v0905.pen
ColorTable: gshade.ctb
Model: Layout1
LAST SAVED BY: jhill

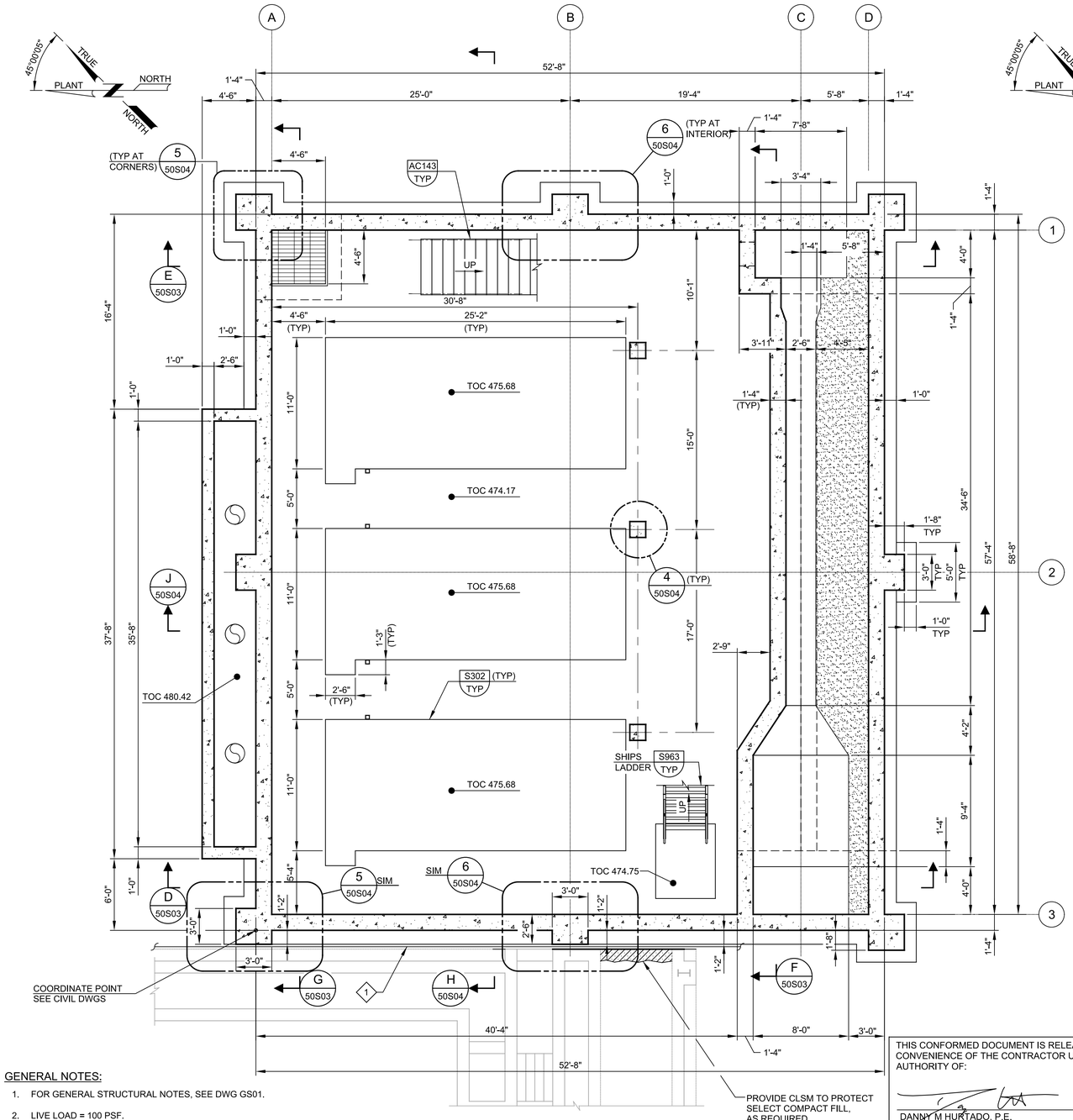

A LOWER PLAN

SCALE: 3/16" = 1'-0"
FILE: 10976A1050S101

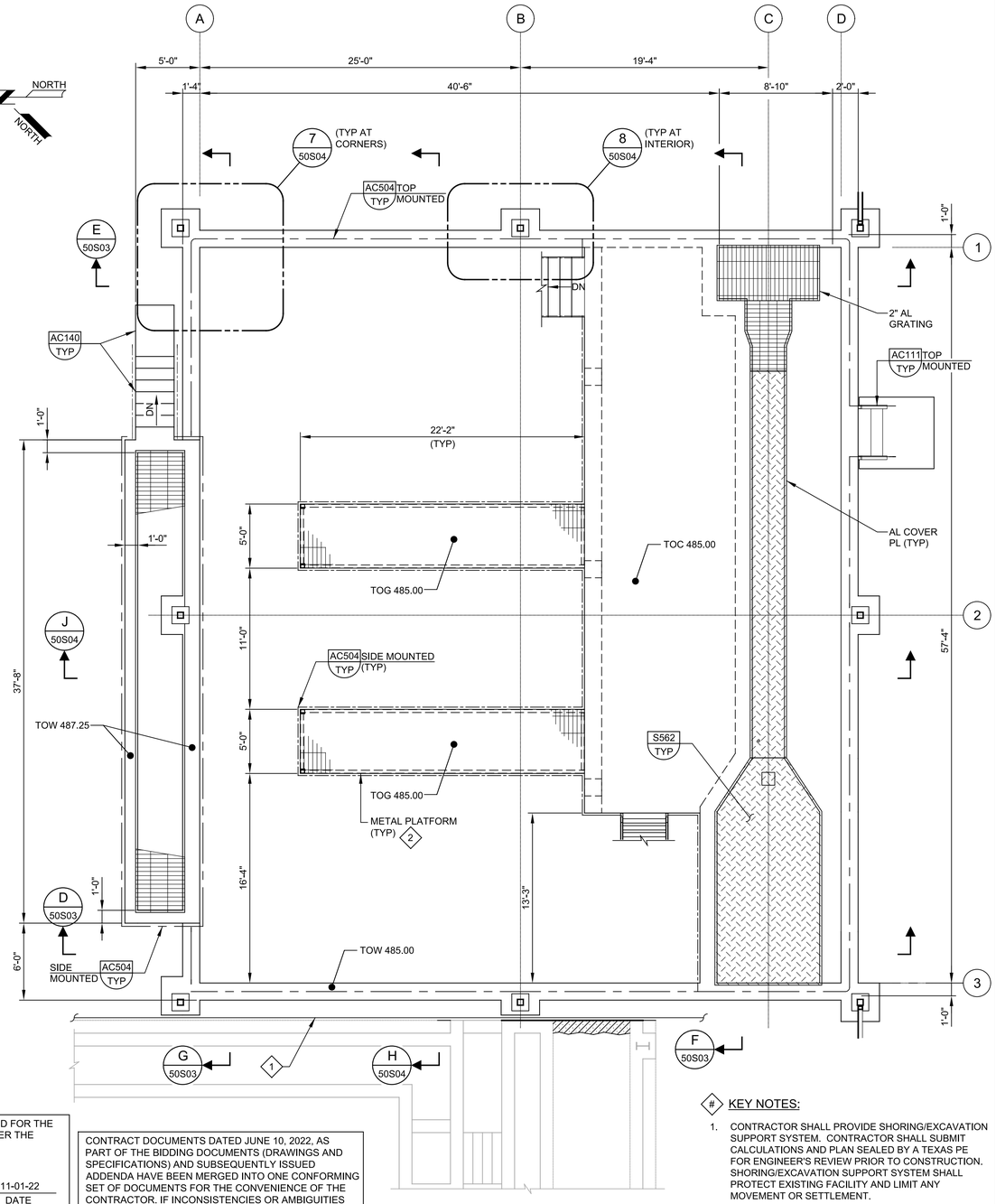

B UPPER PLAN

SCALE: 3/16" = 1'-0"
FILE: 10976A1050S102

GENERAL NOTES:

1. FOR GENERAL STRUCTURAL NOTES, SEE DWG GS01.
2. LIVE LOAD = 100 PSF.
3. FOR OPENINGS IN CONCRETE SLABS OR WALLS SEE S180/TYP.
4. VERIFY COORDINATES WITH CIVIL DRAWINGS.

THIS CONFORMED DOCUMENT IS RELEASED FOR THE CONVENIENCE OF THE CONTRACTOR UNDER THE AUTHORITY OF:

DANNY M HURTADO, P.E.
TX LIC NO. 104266

11-01-22
DATE

SEE DISCLAIMER FOR LIMITATIONS OF USE.

CONTRACT DOCUMENTS DATED JUNE 10, 2022, AS PART OF THE BIDDING DOCUMENTS (DRAWINGS AND SPECIFICATIONS) AND SUBSEQUENTLY ISSUED ADDENDA HAVE BEEN MERGED INTO ONE CONFORMING SET OF DOCUMENTS FOR THE CONVENIENCE OF THE CONTRACTOR. IF INCONSISTENCIES OR AMBIGUITIES BETWEEN "CONFORMED" DOCUMENTS AND CONTRACT DOCUMENTS ARE FOUND, THE CONTRACT DOCUMENTS SHALL GOVERN.

KEY NOTES:

1. CONTRACTOR SHALL PROVIDE SHORING/EXCAVATION SUPPORT SYSTEM. CONTRACTOR SHALL SUBMIT CALCULATIONS AND PLAN SEALED BY A TEXAS PE FOR ENGINEER'S REVIEW PRIOR TO CONSTRUCTION. SHORING/EXCAVATION SUPPORT SYSTEM SHALL PROTECT EXISTING FACILITY AND LIMIT ANY MOVEMENT OR SETTLEMENT.
2. PLATFORM SHALL BE A DELEGATED DESIGN. SUBMIT CALCULATIONS AND DRAWINGS SIGNED BY A TEXAS PE FOR ENGINEERS REVIEW. PLATFORM AND GRATING SHALL BE CONSTRUCTED OF ALUMINUM PER SECTION 05140 AND 05500.

CONFORMED DOCUMENTS

REV	DATE	BY	DESCRIPTION

DESIGNED KMD
DRAWN TJD
CHECKED JDS
DATE NOVEMBER 2022

** ORIGINAL SEALED BY KWASI DUOSE 06-10-22 TX PE 100650 **

carollo
TBPELS No. F-882

CITY OF AUSTIN
FOUNDED 1839

CITY OF AUSTIN

CITY OF AUSTIN
WILD HORSE RANCH WWTP EXPANSION
STRUCTURAL
FILTER/UV DISINFECTION COMPLEX PLANS

VERIFY SCALES
BAR IS ONE INCH ON ORIGINAL DRAWING
0 1"
IF NOT ONE INCH ON THIS SHEET, ADJUST SCALES ACCORDINGLY

JOB NO. 10976A.00
DRAWING NO. 50S01
SHEET NO. 367 OF 464

PROJECT NO. 10976A10 FILE NAME: 10976A1050S001.dgn

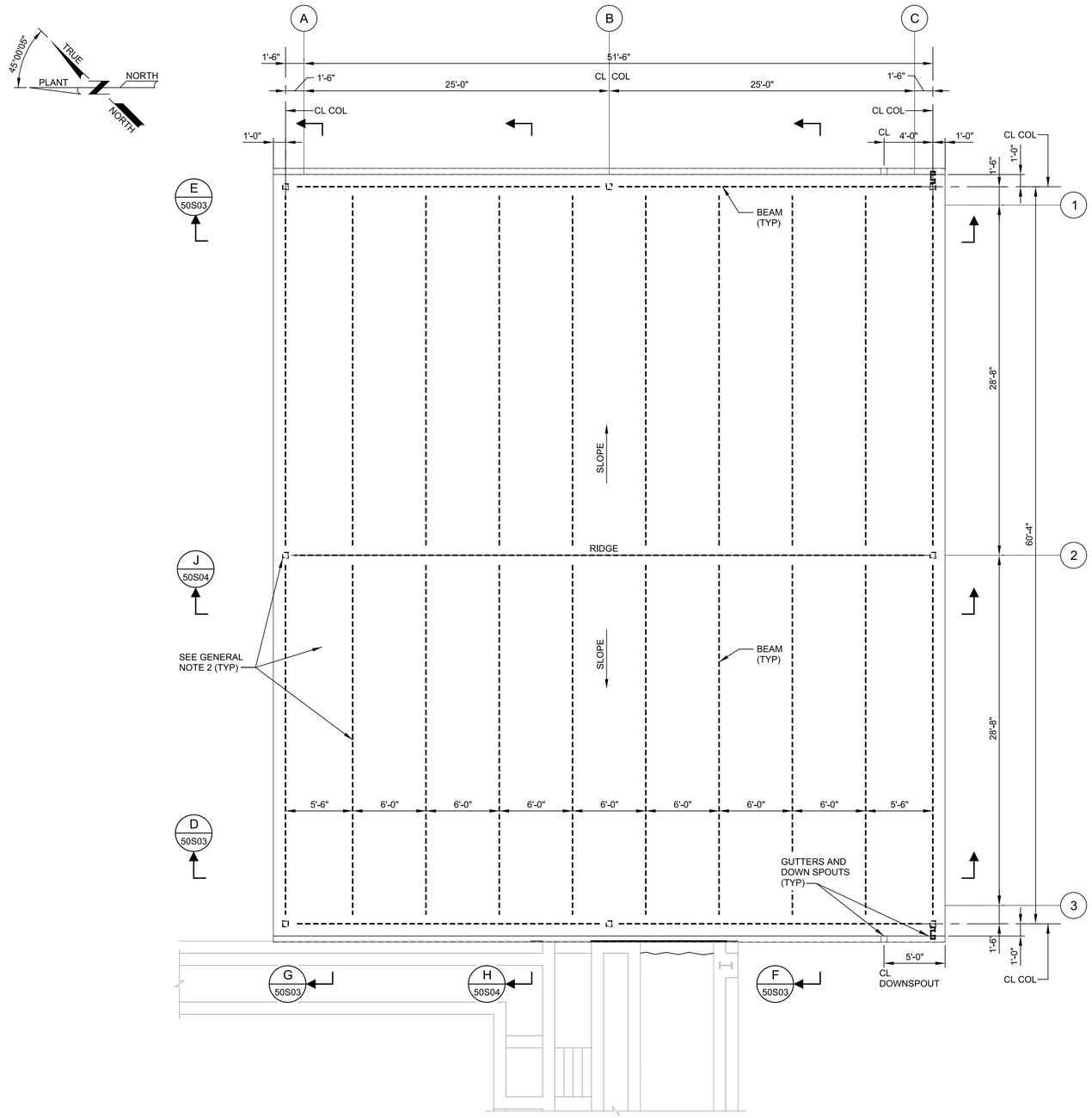

C CANOPY FRAMING PLAN

SCALE: 3/16" = 1'-0"
FILE: 10976A1050S103

GENERAL NOTES:

1. FOR GENERAL STRUCTURAL NOTES, SEE DWG 00GS01.
2. CONTRACTOR SHALL SUBMIT CALCULATIONS AND DRAWINGS FOR THE PROPOSED CANOPY. THE PROPOSED CANOPY SHALL CONSIST OF GALVANIZED STEEL MEMBERS AND A GALVANIZED METAL DECK. NO BRACING IS ALLOWED AND ALL FRAMES SHOULD BE DESIGNED AS MOMENT CONNECTIONS. THE CANOPY SHALL BE DESIGNED IN ACCORDANCE WITH THE WIND AND SEISMIC REQUIREMENTS SPECIFIED IN THE CONTRACT DRAWINGS AND SPECIFICATIONS (INCLUDING BUT NOT LIMITED TO SPEC SECTION 13122). BEAMS B1 AND ACCOMPANYING ROOF DECK SHOULD BE DESIGNED AS REMOVABLE ELEMENTS FOR FUTURE USE. THE STRUCTURAL DESIGN CRITERIA NOTED ON DWG 00GS01, ROOF DEAD LOAD = 20 PSF MIN, ROOF LIVE LOAD = 20 PSF MIN. ALL ANCHORAGE AND CONNECTIONS SHALL ALSO CONFORM TO ACI 318 APPENDIX D. ALL CALCULATIONS AND DRAWINGS SHALL BE SEALED AND SIGNED BY A REGISTERED PROFESSIONAL ENGINEER IN THE STATE OF TEXAS AND SUBMITTED FOR THE ENGINEERS REVIEW PRIOR TO CONSTRUCTION.
3. FOR OPENINGS IN CONCRETE SLABS OR WALLS SEE S180/TYP.
4. VERIFY COORDINATES WITH CIVIL DRAWINGS.

ESTIMATED COLUMN REACTION LOADS (MAX UNFACTORED)		
AXIAL (↑)	UPLIFT (↓)	SHEAR (→)
35.2 K	15.1 K	21.7 K

THIS CONFORMED DOCUMENT IS RELEASED FOR THE CONVENIENCE OF THE CONTRACTOR UNDER THE AUTHORITY OF:

DANNY M HURTADO, P.E.
TX LIC NO. 104266

11-01-22
DATE

SEE DISCLAIMER FOR LIMITATIONS OF USE.

CONTRACT DOCUMENTS DATED JUNE 10, 2022, AS PART OF THE BIDDING DOCUMENTS (DRAWINGS AND SPECIFICATIONS) AND SUBSEQUENTLY ISSUED ADDENDA HAVE BEEN MERGED INTO ONE CONFORMING SET OF DOCUMENTS FOR THE CONVENIENCE OF THE CONTRACTOR, IF INCONSISTENCIES OR AMBIGUITIES BETWEEN "CONFORMED" DOCUMENTS AND CONTRACT DOCUMENTS ARE FOUND, THE CONTRACT DOCUMENTS SHALL GOVERN.

REV	DATE	BY	DESCRIPTION
			CONFORMED DOCUMENTS

DESIGNED KMD
DRAWN TJD
CHECKED JDS
DATE NOVEMBER 2022

** ORIGINAL SEALED BY KWASI DUOSE 06-10-22 TX PE 100650 **

carollo®
TBPELS No. F-882

CITY OF AUSTIN
FOUNDED 1839

CITY OF AUSTIN

CITY OF AUSTIN
WILD HORSE RANCH WWTP EXPANSION
STRUCTURAL
FILTER/UV DISINFECTION COMPLEX
CANOPY FRAME PLAN

VERIFY SCALES
BAR IS ONE INCH ON ORIGINAL DRAWING
0 1"
IF NOT ONE INCH ON THIS SHEET, ADJUST SCALES ACCORDINGLY

JOB NO. 10976A.00
DRAWING NO. 50S02
SHEET NO. 368 OF 464

PROJECT NO. 10976A10 FILE NAME: 10976A1050S002.dgn

Plot Date: 10-OCT-2022 1:47:52 PM
User: LDietzel
Model: Layout1 ColorTable: gshade.ctb DesignScript: Carollo_Std_Pen_v0905.pen PlotScale: 1:1
LAST SAVED BY: eratcliff

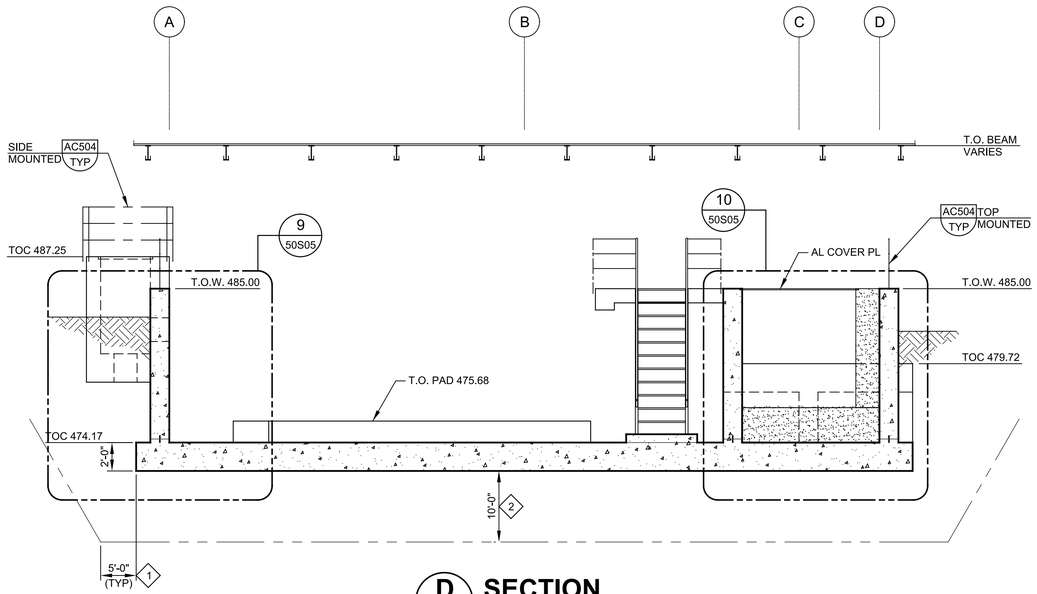

D SECTION

D / 50S01

SCALE: 3/16" = 1'-0"
FILE: 10976A1050S301

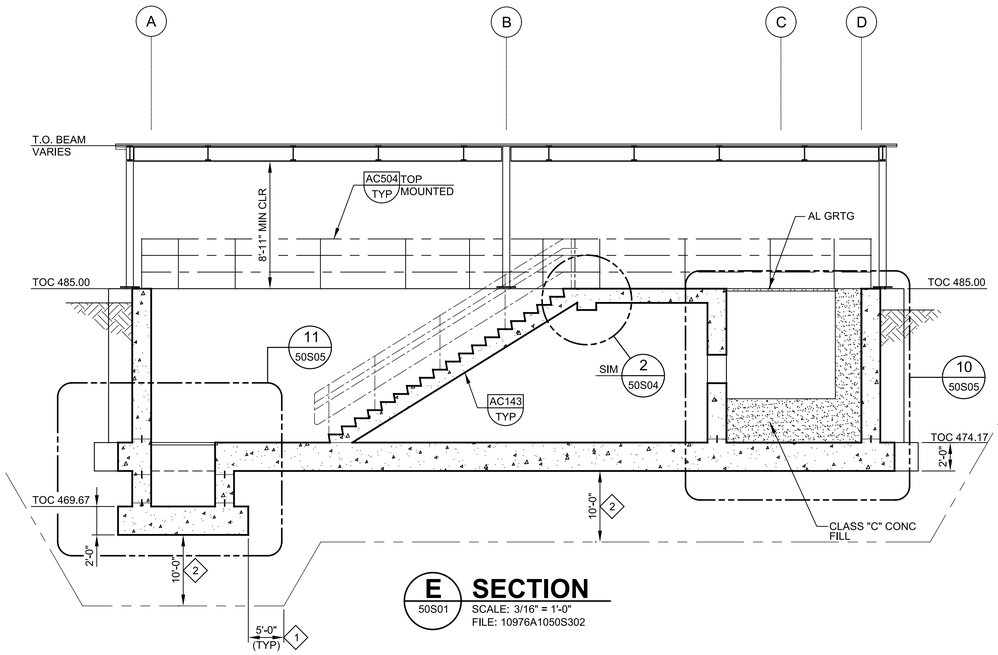

E SECTION

E / 50S01

SCALE: 3/16" = 1'-0"
FILE: 10976A1050S302

GENERAL NOTES:

1. FOR GENERAL STRUCTURAL NOTES, SEE DWG 00GS01.
2. LIVE LOAD = 100 PSF.
3. FOR OPENINGS IN CONCRETE SLABS OR WALLS SEE S180/TYP.
4. VERIFY COORDINATES WITH CIVIL DRAWINGS.

KEY NOTES:

1. REMOVE AND REPLACE EXISTING SOIL WITH SELECT FILL FOR A MINIMUM OF 5FT OUTSIDE THE STRUCTURE FOOTPRINT.
2. FOR FOUNDATION AND SUBGRADE PREPARATION SEE GENERAL STRUCTURAL NOTES DRAWING 00GS01.
3. CONTRACTOR SHALL PROVIDE SHORING/EXCAVATION SUPPORT SYSTEM. CONTRACTOR SHALL SUBMIT CALCULATIONS AND PLAN SEALED BY A TEXAS PE FOR ENGINEER'S REVIEW PRIOR TO CONSTRUCTION. SHORING/EXCAVATION SUPPORT SYSTEM SHALL PROTECT EXISTING FACILITY AND LIMIT ANY MOVEMENT OR SETTLEMENT.

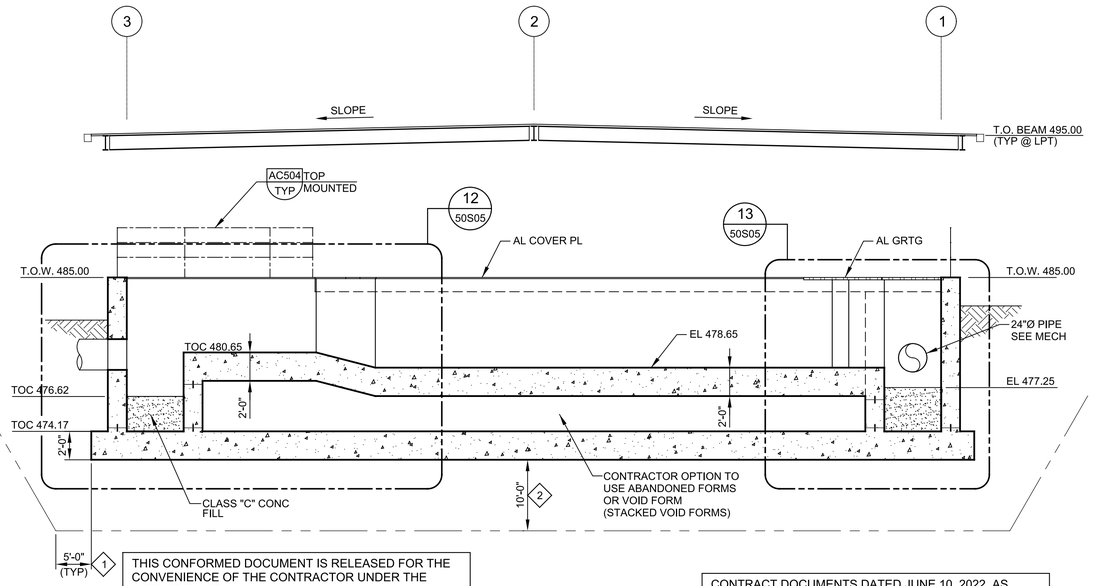

F SECTION

F / 50S01

SCALE: 3/16" = 1'-0"
FILE: 10976A1050S303

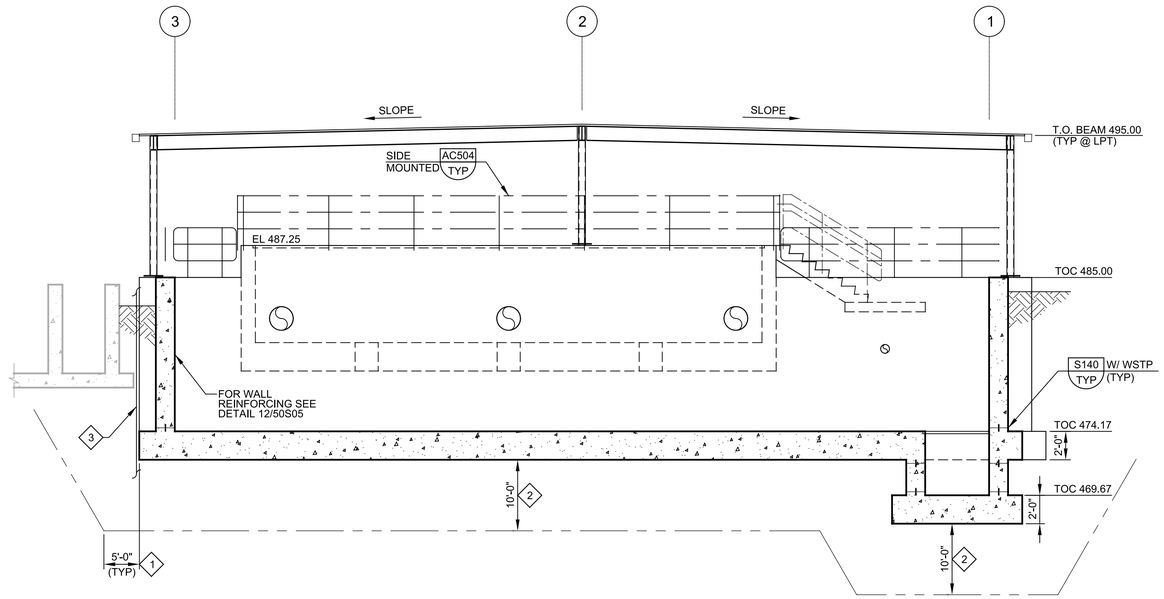

G SECTION

G / 50S01

SCALE: 3/16" = 1'-0"
FILE: 10976A1050S304

THIS CONFORMED DOCUMENT IS RELEASED FOR THE CONVENIENCE OF THE CONTRACTOR UNDER THE AUTHORITY OF:

DANNY M HURTADO, P.E.
TX LIC NO. 104266

11-01-22
DATE

SEE DISCLAIMER FOR LIMITATIONS OF USE.

CONTRACT DOCUMENTS DATED JUNE 10, 2022, AS PART OF THE BIDDING DOCUMENTS (DRAWINGS AND SPECIFICATIONS) AND SUBSEQUENTLY ISSUED ADDENDA HAVE BEEN MERGED INTO ONE CONFORMING SET OF DOCUMENTS FOR THE CONVENIENCE OF THE CONTRACTOR. IF INCONSISTENCIES OR AMBIGUITIES BETWEEN "CONFORMED" DOCUMENTS AND CONTRACT DOCUMENTS ARE FOUND, THE CONTRACT DOCUMENTS SHALL GOVERN.

REV	DATE	BY	DESCRIPTION
			CONFORMED DOCUMENTS

DESIGNED KMD
DRAWN TJD
CHECKED JDS
DATE NOVEMBER 2022

** ORIGINAL SEALED BY KWASI DUOSE 06-10-22 TX PE 100650 **

carollo®
TBPELS No. F-882

CITY OF AUSTIN
FOUNDED 1839

CITY OF AUSTIN

CITY OF AUSTIN
WILD HORSE RANCH WWTP EXPANSION
STRUCTURAL
FILTER/UV DISINFECTION COMPLEX SECTIONS AND DETAILS 1

VERIFY SCALES
BAR IS ONE INCH ON ORIGINAL DRAWING
0 1"
IF NOT ONE INCH ON THIS SHEET, ADJUST SCALES ACCORDINGLY

JOB NO. 10976A.00
DRAWING NO. 50S03
SHEET NO. 369 OF 464

PROJECT NO. 10976A10 FILE NAME: 10976A1050S003.dgn

Plot Date: 10-OCT-2022 1:50:38 PM
User: LDietzel
Model: Layout1 ColorTable: gshade.ctb DesignScript: Carollo_Std_Pen_v0905.pen PlotScale: 1:1
LAST SAVED BY: eratcliff

Plot Date: 10-OCT-2022 2:01:39 PM
User: LDietzel
PlotScale: 1:1
DesignScript: Carollo_Std_Pen_v0905.pen
ColorTable: gshade.ctb
Model: Layout1
LAST SAVED BY: eraliff

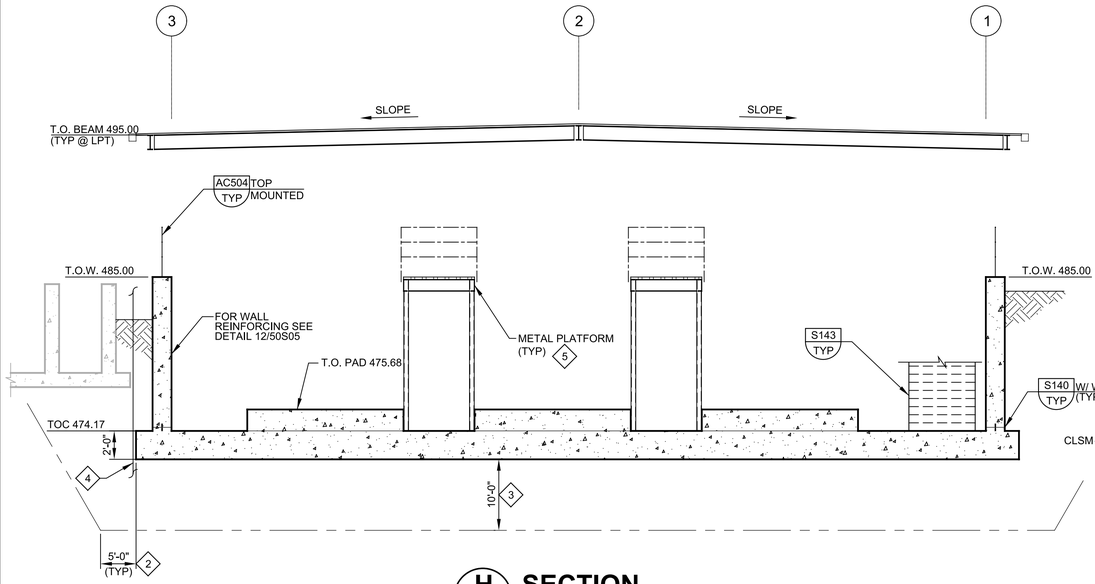

H SECTION
50S01
SCALE: 3/16" = 1'-0"
FILE: 10976A1050S305

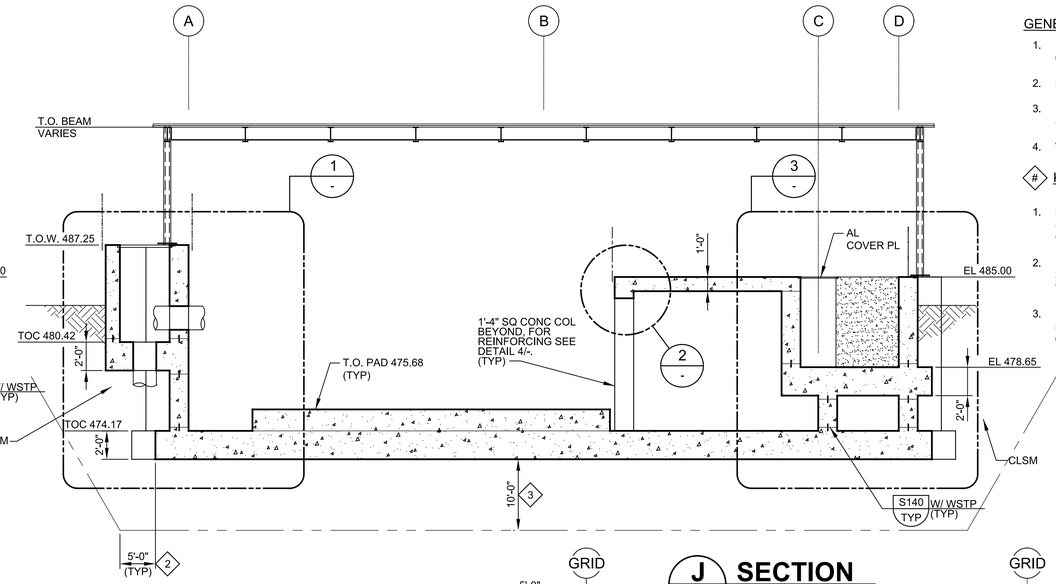

J SECTION
50S01
SCALE: 3/16" = 1'-0"
FILE: 10976A1050S306

GENERAL NOTES:

1. FOR GENERAL STRUCTURAL NOTES, SEE DWG 00GS01.
2. LIVE LOAD = 100 PSF.
3. FOR OPENINGS IN CONCRETE SLABS OR WALLS SEE S180/TYP.
4. VERIFY COORDINATES WITH CIVIL DRAWINGS.

KEY NOTES:

1. LAP TOP REINFORCING BETWEEN COLUMN SUPPORTS AND LAP BOTTOM REINFORCING AT COLUMN SUPPORTS
2. REMOVE AND REPLACE EXISTING SOIL WITH SELECT FILL FOR A MINIMUM OF 5FT OUTSIDE THE STRUCTURE FOOTPRINT.
3. FOR FOUNDATION AND SUBGRADE PREPARATION SEE GENERAL STRUCTURAL NOTES DRAWING 00GS01
4. CONTRACTOR SHALL PROVIDE SHORING/EXCAVATION SUPPORT SYSTEM. CONTRACTOR SHALL SUBMIT CALCULATIONS AND PLAN SEALED BY A TEXAS PE FOR ENGINEER'S REVIEW PRIOR TO CONSTRUCTION. SHORING/EXCAVATION SUPPORT SYSTEM SHALL PROTECT EXISTING FACILITY AND LIMIT ANY MOVEMENT OR SETTLEMENT.
5. PLATFORM SHALL BE A DELEGATED DESIGN. SUBMIT CALCULATIONS AND DRAWINGS SIGNED BY A TEXAS PE FOR ENGINEERS REVIEW.

THIS CONFORMED DOCUMENT IS RELEASED FOR THE CONVENIENCE OF THE CONTRACTOR UNDER THE AUTHORITY OF:

DANNY M HURTADO, P.E.
TX LIC NO. 104266

11-01-22
DATE

SEE DISCLAIMER FOR LIMITATIONS OF USE.

CONTRACT DOCUMENTS DATED JUNE 10, 2022, AS PART OF THE BIDDING DOCUMENTS (DRAWINGS AND SPECIFICATIONS) AND SUBSEQUENTLY ISSUED ADDENDA HAVE BEEN MERGED INTO ONE CONFORMING SET OF DOCUMENTS FOR THE CONVENIENCE OF THE CONTRACTOR. IF INCONSISTENCIES OR AMBIGUITIES BETWEEN "CONFORMED" DOCUMENTS AND CONTRACT DOCUMENTS ARE FOUND, THE CONTRACT DOCUMENTS SHALL GOVERN.

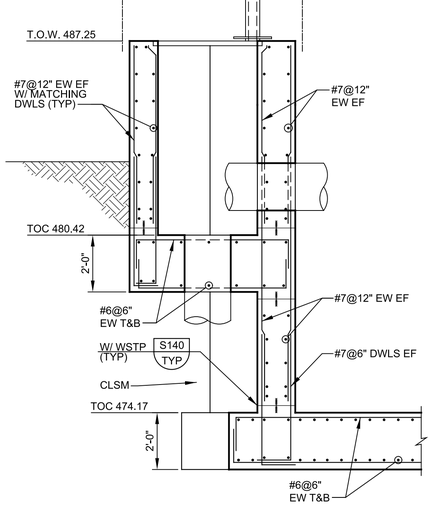

1 DETAIL
SCALE: 3/8" = 1'-0"
FILE: 10976A1050S306

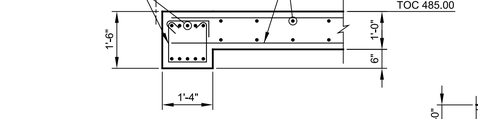

2 DETAIL
SCALE: 1/2" = 1'-0"
FILE: 10976A1050S306

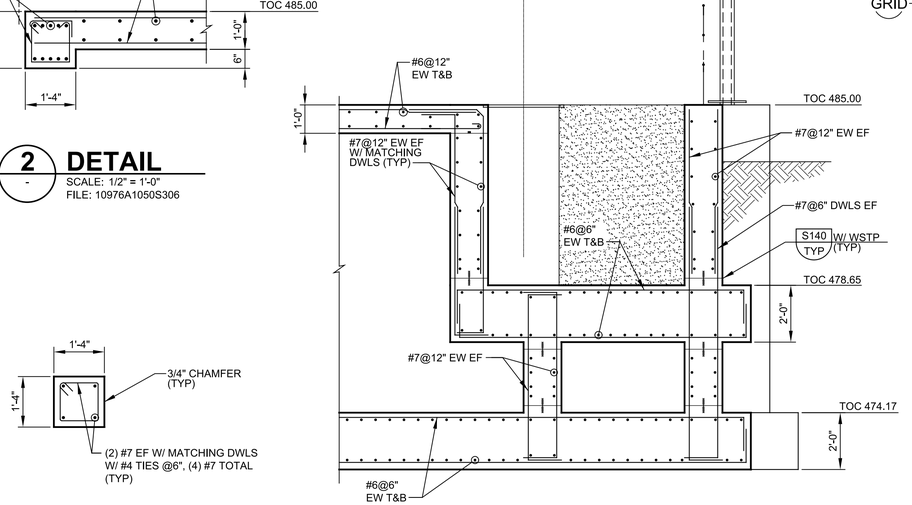

3 DETAIL
SCALE: 3/8" = 1'-0"
FILE: 10976A1050S306

4 DETAIL
50S01
SCALE: 1/2" = 1'-0"
FILE: 10976A1050S101

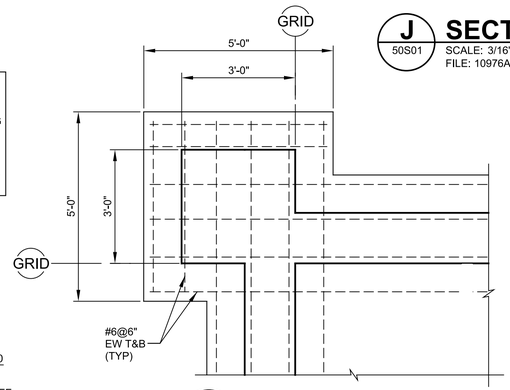

5 DETAIL
50S01
SCALE: 1/2" = 1'-0"
FILE: 10976A1050S101

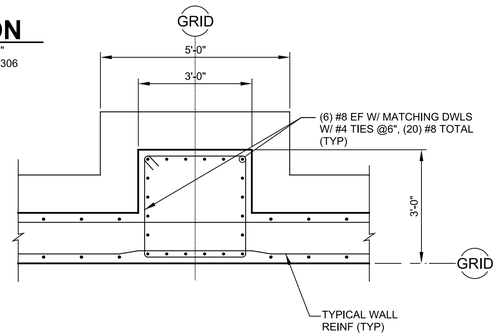

6 DETAIL
50S01
SCALE: 1/2" = 1'-0"
FILE: 10976A1050S101

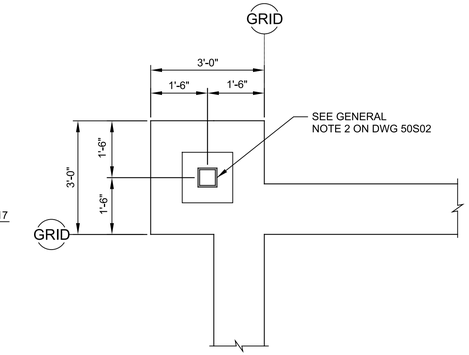

7 DETAIL
50S01
SCALE: 1/2" = 1'-0"
FILE: 10976A1050S102

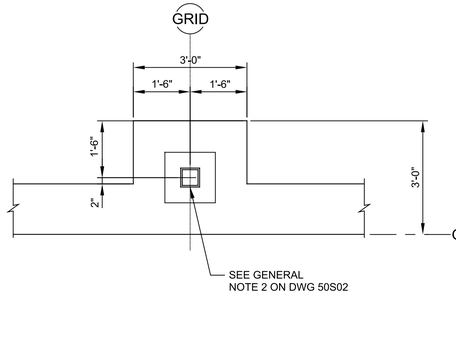

8 DETAIL
50S01
SCALE: 1/2" = 1'-0"
FILE: 10976A1050S102

REV	DATE	BY	DESCRIPTION
			CONFORMED DOCUMENTS

DESIGNED KMD
DRAWN TJD
CHECKED JDS
DATE NOVEMBER 2022

** ORIGINAL SEALED BY KWASI DUOSE 06-10-22 TX PE 100650 **

carollo®
TBPELS No. F-882

CITY OF AUSTIN
FOUNDED 1839

CITY OF AUSTIN

CITY OF AUSTIN
WILD HORSE RANCH WWTP EXPANSION
STRUCTURAL
FILTER/UV DISINFECTION COMPLEX
SECTIONS AND DETAILS 2

VERIFY SCALES
BAR IS ONE INCH ON ORIGINAL DRAWING
0 1"
IF NOT ONE INCH ON THIS SHEET, ADJUST SCALES ACCORDINGLY

JOB NO. 10976A.00
DRAWING NO. 50S04
SHEET NO. 370 OF 464

Plot Date: 10-OCT-2022 2:03:37 PM
User: LDietzel
PlotScale: 1:1
DesignScript: Carollo_Std_Pen_v0905.pen
ColorTable: gshade.ctb
Model: Layout1
LAST SAVED BY: jhill

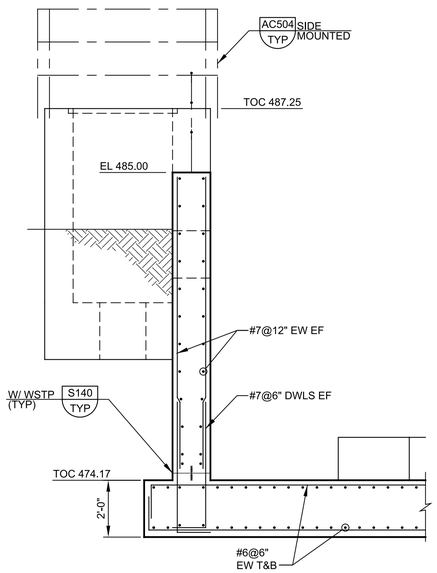

9 DETAIL
50S03 SCALE: 3/8" = 1'-0"
FILE: 10976A1050S301

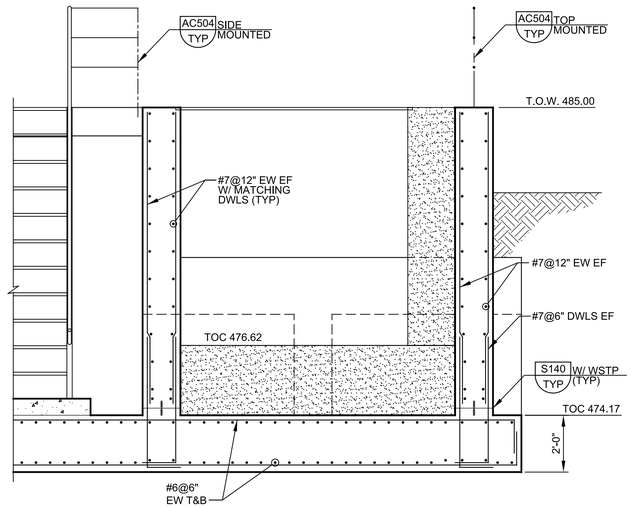

10 DETAIL
50S03 SCALE: 3/8" = 1'-0"
FILE: 10976A1050S301

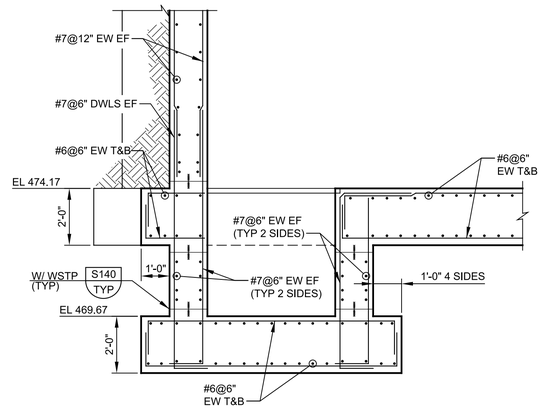

11 DETAIL
50S03 SCALE: 3/16" = 1'-0"
FILE: 10976A1050S302

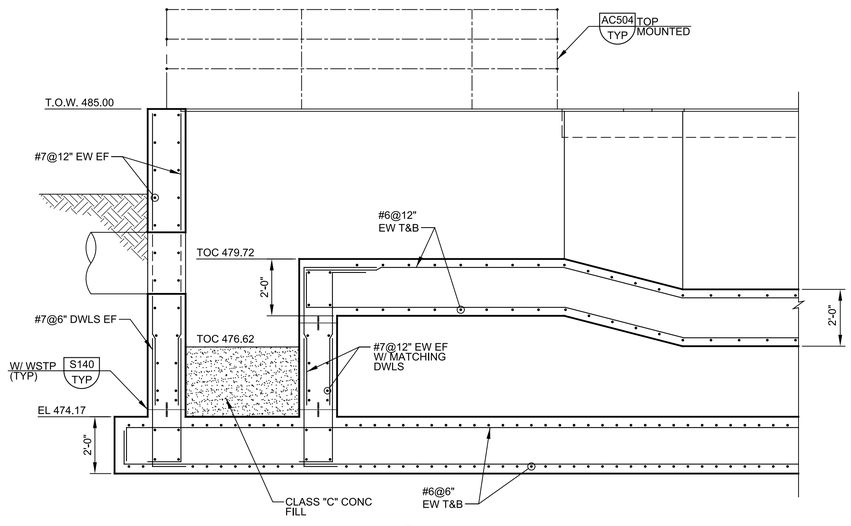

12 DETAIL
50S03 SCALE: 3/8" = 1'-0"
FILE: 10976A1050S303

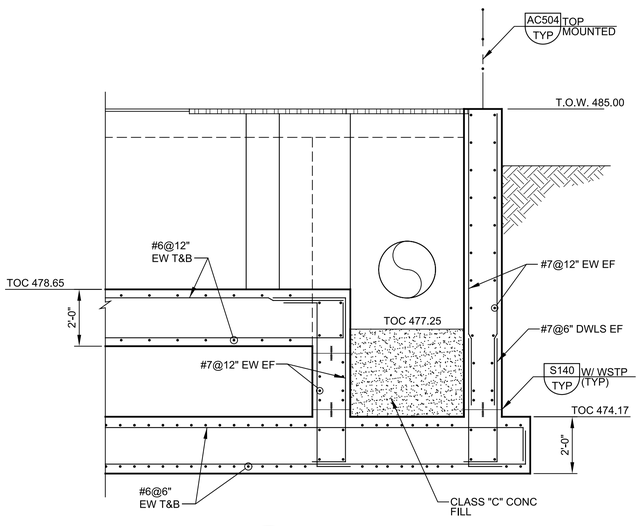

13 DETAIL
50S03 SCALE: 3/8" = 1'-0"
FILE: 10976A1050S303

GENERAL NOTES:

1. FOR GENERAL STRUCTURAL NOTES, SEE DWG 00GS01.
2. FOR OPENINGS IN CONCRETE SLABS OR WALLS SEE S180/TYP.
3. VERIFY COORDINATES WITH CIVIL DRAWINGS.

THIS CONFORMED DOCUMENT IS RELEASED FOR THE CONVENIENCE OF THE CONTRACTOR UNDER THE AUTHORITY OF:

DANNY M HURTADO, P.E.
TX LIC NO. 104266
11-01-22
DATE

SEE DISCLAIMER FOR LIMITATIONS OF USE.

CONTRACT DOCUMENTS DATED JUNE 10, 2022, AS PART OF THE BIDDING DOCUMENTS (DRAWINGS AND SPECIFICATIONS) AND SUBSEQUENTLY ISSUED ADDENDA HAVE BEEN MERGED INTO ONE CONFORMING SET OF DOCUMENTS FOR THE CONVENIENCE OF THE CONTRACTOR. IF INCONSISTENCIES OR AMBIGUITIES BETWEEN "CONFORMED" DOCUMENTS AND CONTRACT DOCUMENTS ARE FOUND, THE CONTRACT DOCUMENTS SHALL GOVERN.

REV	DATE	BY	DESCRIPTION
			CONFORMED DOCUMENTS

DESIGNED KMD
DRAWN TJD
CHECKED JDS
DATE NOVEMBER 2022

** ORIGINAL SEALED BY KWASI DUOSE 06-10-22 TX PE 100650 **

carollo®
TBPELS No. F-882

CITY OF AUSTIN
WILD HORSE RANCH WWTP EXPANSION
STRUCTURAL
FILTER/UV DISINFECTION COMPLEX SECTIONS AND DETAILS 3

VERIFY SCALES
BAR IS ONE INCH ON ORIGINAL DRAWING
0 1"
IF NOT ONE INCH ON THIS SHEET, ADJUST SCALES ACCORDINGLY

JOB NO. 10976A.00
DRAWING NO. 50S05
SHEET NO. 371 OF 464

Plot Date: 10-OCT-2022 2:05:32 PM
User: LDietzel
Model: Layout1 ColorTable: gshade.ctb DesignScript: Carollo_Std_Pen_v0905.pen PlotScale: 1:1
LAST SAVED BY: jhill

GENERAL NOTES:

1. FOR GENERAL STRUCTURAL NOTES SEE DRAWING 00GS01.
2. FOR OPENINGS IN CONCRETE SLABS OR WALLS S180/TYP.
3. VERIFY COORDINATES WITH CIVIL DRAWINGS.

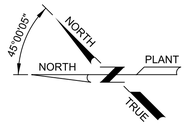

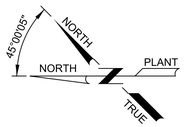

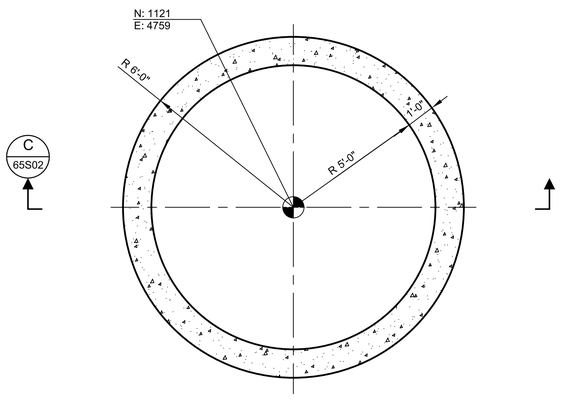

A LOWER PLAN

SCALE: 3/8" = 1'-0"
FILE: 10976A1065S101

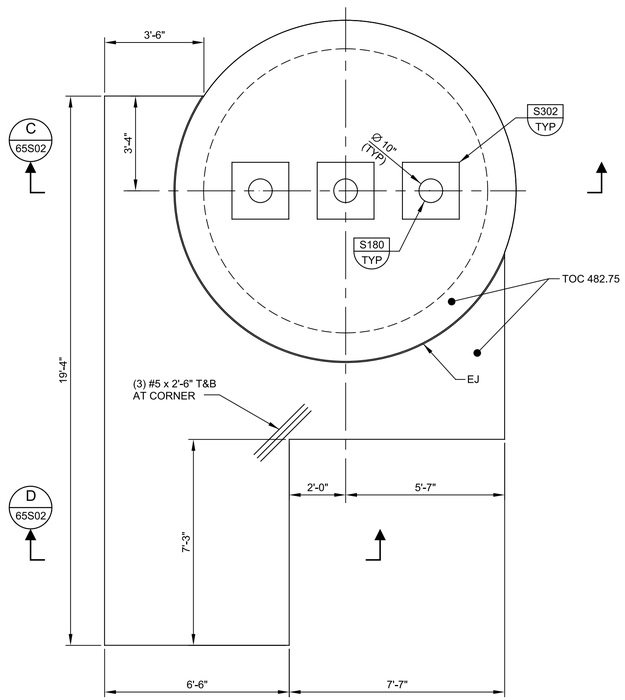

B UPPER PLAN

SCALE: 3/8" = 1'-0"
FILE: 10976A1065S102

THIS CONFORMED DOCUMENT IS RELEASED FOR THE CONVENIENCE OF THE CONTRACTOR UNDER THE AUTHORITY OF:

DANNY M HURTADO, P.E. — 11-01-22
TX LIC NO. 104266 — DATE

SEE DISCLAIMER FOR LIMITATIONS OF USE.

CONTRACT DOCUMENTS DATED JUNE 10, 2022, AS PART OF THE BIDDING DOCUMENTS (DRAWINGS AND SPECIFICATIONS) AND SUBSEQUENTLY ISSUED ADDENDA HAVE BEEN MERGED INTO ONE CONFORMING SET OF DOCUMENTS FOR THE CONVENIENCE OF THE CONTRACTOR. IF INCONSISTENCIES OR AMBIGUITIES BETWEEN "CONFORMED" DOCUMENTS AND CONTRACT DOCUMENTS ARE FOUND, THE CONTRACT DOCUMENTS SHALL GOVERN.

REV	DATE	BY	DESCRIPTION
			CONFORMED DOCUMENTS

DESIGNED AAC
DRAWN JKK
CHECKED JDS
DATE NOVEMBER 2022

** ORIGINAL SEALED BY KWASI DUOSE 06-10-22 TX PE 100650 **

carollo®
TBPELS No. F-882

CITY OF AUSTIN

CITY OF AUSTIN
WILD HORSE RANCH WWTP EXPANSION
STRUCTURAL
PLANT WATER PUMP STATION PLANS

VERIFY SCALES
BAR IS ONE INCH ON ORIGINAL DRAWING
0 1"
IF NOT ONE INCH ON THIS SHEET, ADJUST SCALES ACCORDINGLY

JOB NO. 10976A.00
DRAWING NO. 65S01
SHEET NO. 372 OF 464

PROJECT NO. 10976A10 FILE NAME: 10976A1065S001.dgn

Plot Date: 10-OCT-2022 2:07:17 PM
User: LDietzel
PlotScale: 1:1
DesignScript: Carollo_Std_Pen_v0905.pen
ColorTable: gshade.ctb
Model: Layout1
LAST SAVED BY: jhill

GENERAL NOTES:

1. FOR GENERAL STRUCTURAL NOTES SEE DRAWING 00GS01.
2. FOR OPENINGS IN CONCRETE SLABS OR WALLS SEE S180/TYP.
3. VERIFY COORDINATES WITH CIVIL DRAWINGS.

KEY NOTES:

1 REMOVE AND REPLACE EXISTING SOIL WITH SELECT FILL FOR MINIMUM OF 5FT OUTSIDE THE STRUCTURE FOOTPRINT.

2 FOR FOUNDATION AND SUBGRADE PREPARATION, SEE GENERAL STRUCTURAL NOTES DRAWING 00GS01.

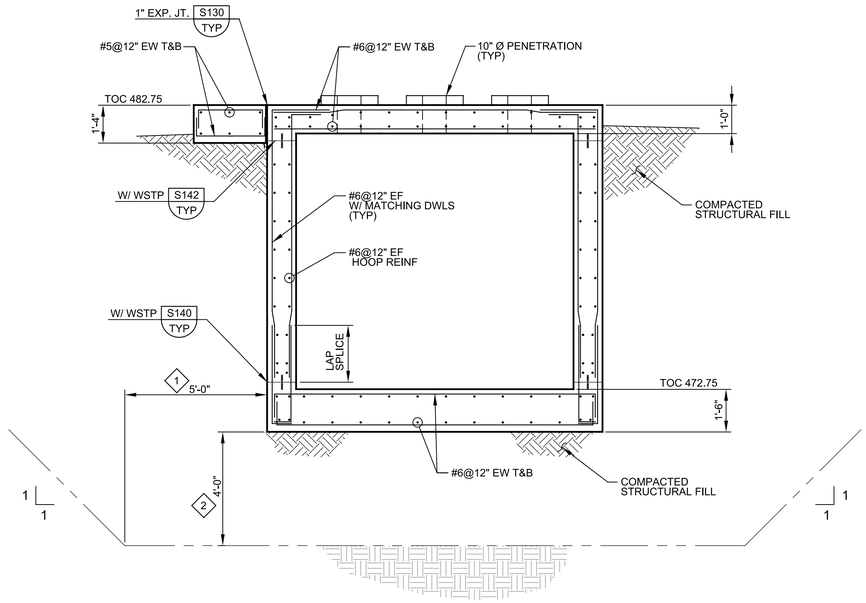

C 65S01 **SECTION**
SCALE: 3/8" = 1'-0"
FILE: 10976A1065S301

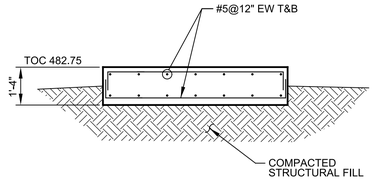

D 65S01 **SECTION**
SCALE: 3/8" = 1'-0"
FILE: 10976A1065S302

THIS CONFORMED DOCUMENT IS RELEASED FOR THE CONVENIENCE OF THE CONTRACTOR UNDER THE AUTHORITY OF:

11-01-22
DANNY M HURTADO, P.E. DATE
TX LIC NO. 104266

SEE DISCLAIMER FOR LIMITATIONS OF USE.

CONTRACT DOCUMENTS DATED JUNE 10, 2022, AS PART OF THE BIDDING DOCUMENTS (DRAWINGS AND SPECIFICATIONS) AND SUBSEQUENTLY ISSUED ADDENDA HAVE BEEN MERGED INTO ONE CONFORMING SET OF DOCUMENTS FOR THE CONVENIENCE OF THE CONTRACTOR. IF INCONSISTENCIES OR AMBIGUITIES BETWEEN "CONFORMED" DOCUMENTS AND CONTRACT DOCUMENTS ARE FOUND, THE CONTRACT DOCUMENTS SHALL GOVERN.

REV	DATE	BY	DESCRIPTION
			CONFORMED DOCUMENTS

DESIGNED AAC
DRAWN JKK
CHECKED JDS
DATE NOVEMBER 2022

** ORIGINAL SEALED BY KWASI DUOSE 06-10-22 TX PE 100650 **

carollo®
TBPELS No. F-882

CITY OF AUSTIN
FOUNDED 1839
CITY OF AUSTIN

CITY OF AUSTIN
WILD HORSE RANCH WWTP EXPANSION
STRUCTURAL
PLANT WATER PUMP STATION SECTIONS

VERIFY SCALES
BAR IS ONE INCH ON ORIGINAL DRAWING
0 1"
IF NOT ONE INCH ON THIS SHEET, ADJUST SCALES ACCORDINGLY

JOB NO. 10976A.00
DRAWING NO. 65S02
SHEET NO. 373 OF 464

Plot Date: 10-OCT-2022 2:09:04 PM
User: LDietzel
Model: Layout1 ColorTable: gshade.ctb DesignScript: Carollo_Std_Pen_v0905.pen PlotScale: 1:1
LAST SAVED BY: jhill

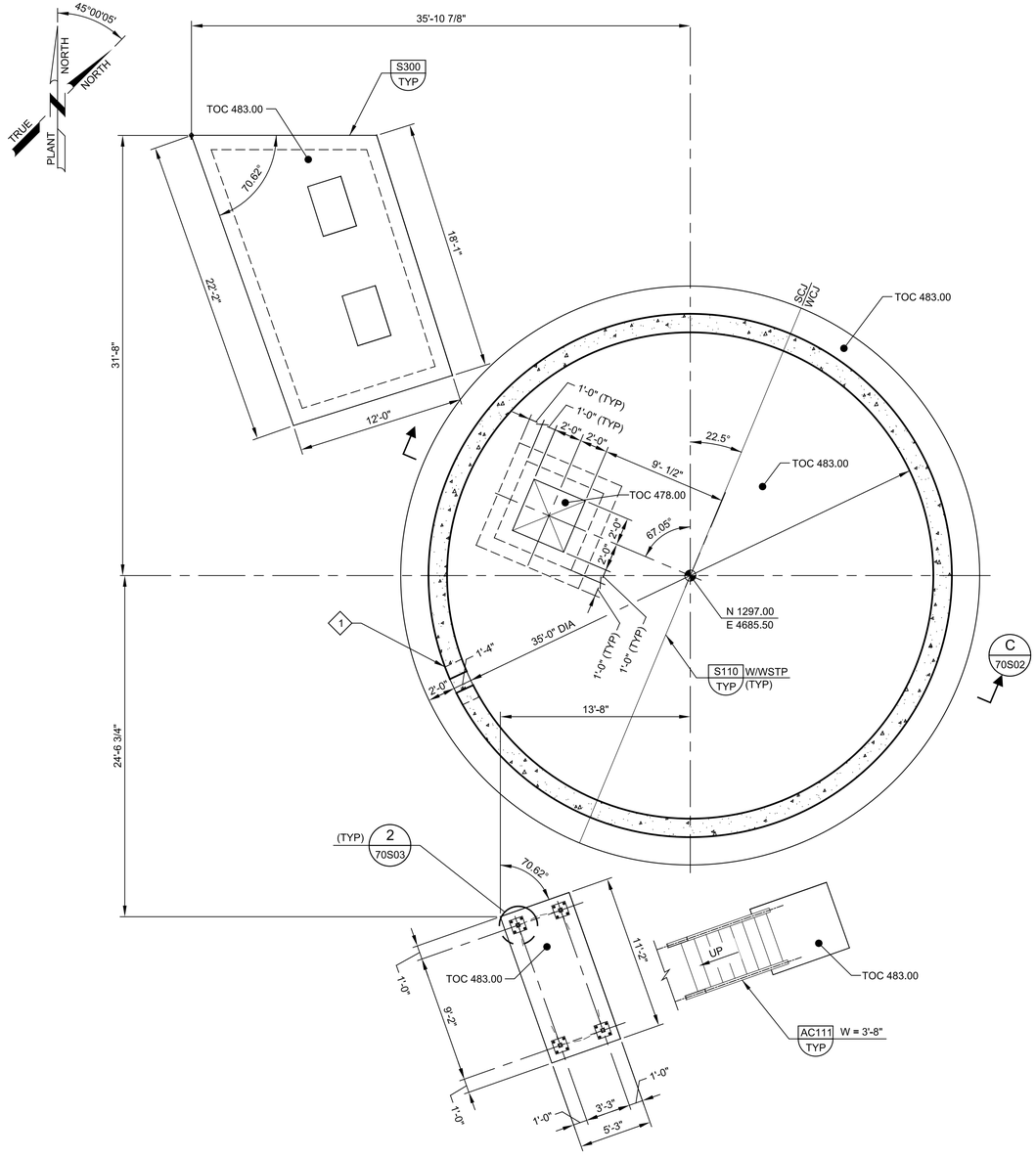

A LOWER PLAN

SCALE: 3/16" = 1'-0"
FILE: 10976A1070S101

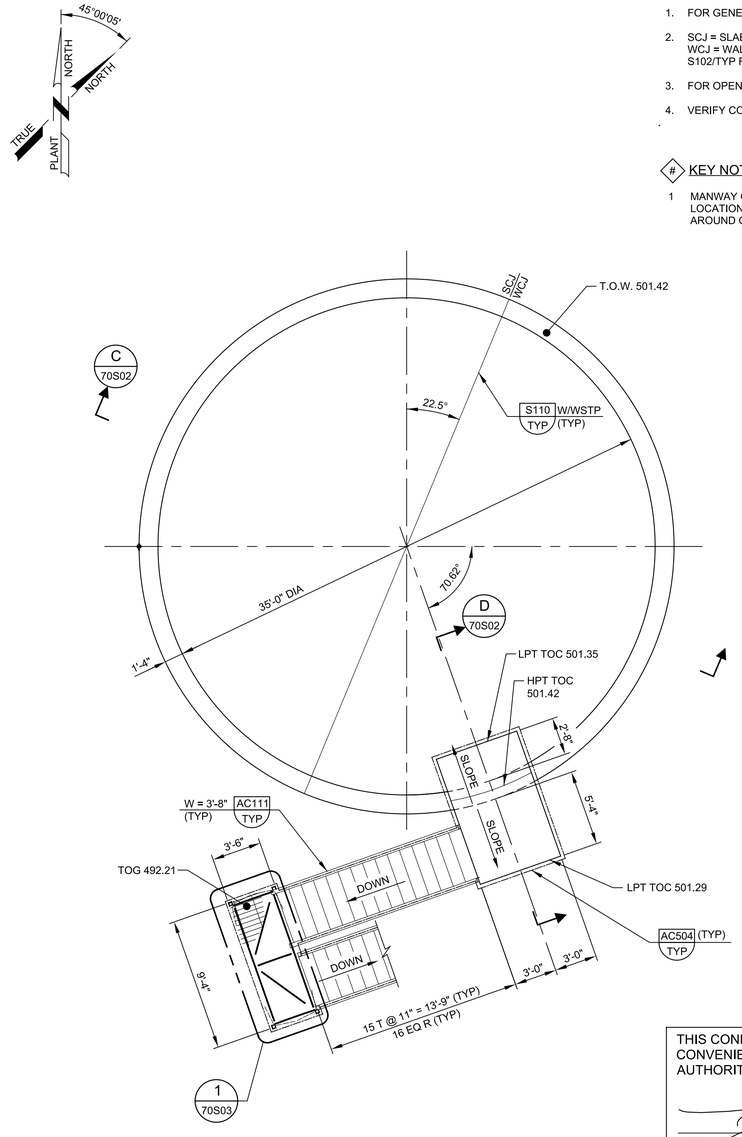

B UPPER PLAN

SCALE: 3/16" = 1'-0"
FILE: 10976A1070S102

GENERAL NOTES:

1. FOR GENERAL STRUCTURAL NOTES SEE DRAWING 00GS01.
2. SCJ = SLAB CONSTRUCTION JOINTPER DETAIL S110/TYP
   WCJ = WALL CONSTRUCTION JOINT PER DETAIL S110/TYP. SEE DETAIL S102/TYP FOR HORIZ REINF SPLICES.
3. FOR OPENINGS IN CONCRETE SLABS OR WALLS SEE S180/TYP.
4. VERIFY COORDINATES WITH CIVIL DRAWINGS.

KEY NOTES:

1 MANWAY OPENING IN WALL. SEE MECHANICAL FOR SIZE AND LOCATION. USE DET S180/TYP FOR ADDITIONAL REINFORCEMENT AROUND OPENING.

THIS CONFORMED DOCUMENT IS RELEASED FOR THE CONVENIENCE OF THE CONTRACTOR UNDER THE AUTHORITY OF:

DANNY M HURTADO, P.E.
TX LIC NO. 104266

11-01-22
DATE

SEE DISCLAIMER FOR LIMITATIONS OF USE.

CONTRACT DOCUMENTS DATED JUNE 10, 2022, AS PART OF THE BIDDING DOCUMENTS (DRAWINGS AND SPECIFICATIONS) AND SUBSEQUENTLY ISSUED ADDENDA HAVE BEEN MERGED INTO ONE CONFORMING SET OF DOCUMENTS FOR THE CONVENIENCE OF THE CONTRACTOR. IF INCONSISTENCIES OR AMBIGUITIES BETWEEN "CONFORMED" DOCUMENTS AND CONTRACT DOCUMENTS ARE FOUND, THE CONTRACT DOCUMENTS SHALL GOVERN.

REV	DATE	BY	DESCRIPTION
			CONFORMED DOCUMENTS

DESIGNED AAC
DRAWN TJD
CHECKED JDS
DATE NOVEMBER 2022

** ORIGINAL SEALED BY KWASI DUOSE 06-10-22 TX PE 100650 **

carollo®
TBPELS No. F-882

CITY OF AUSTIN
POUNDED 1839
CITY OF AUSTIN

CITY OF AUSTIN
WILD HORSE RANCH WWTP EXPANSION
STRUCTURAL
SLUDGE HOLDING TANK 1
PLANS

VERIFY SCALES
BAR IS ONE INCH ON ORIGINAL DRAWING
0 1"
IF NOT ONE INCH ON THIS SHEET, ADJUST SCALES ACCORDINGLY

JOB NO. 10976A.00
DRAWING NO. 70S01
SHEET NO. 374 OF 464

PROJECT NO. 10976A10 FILE NAME: 10976A1070S001.dgn

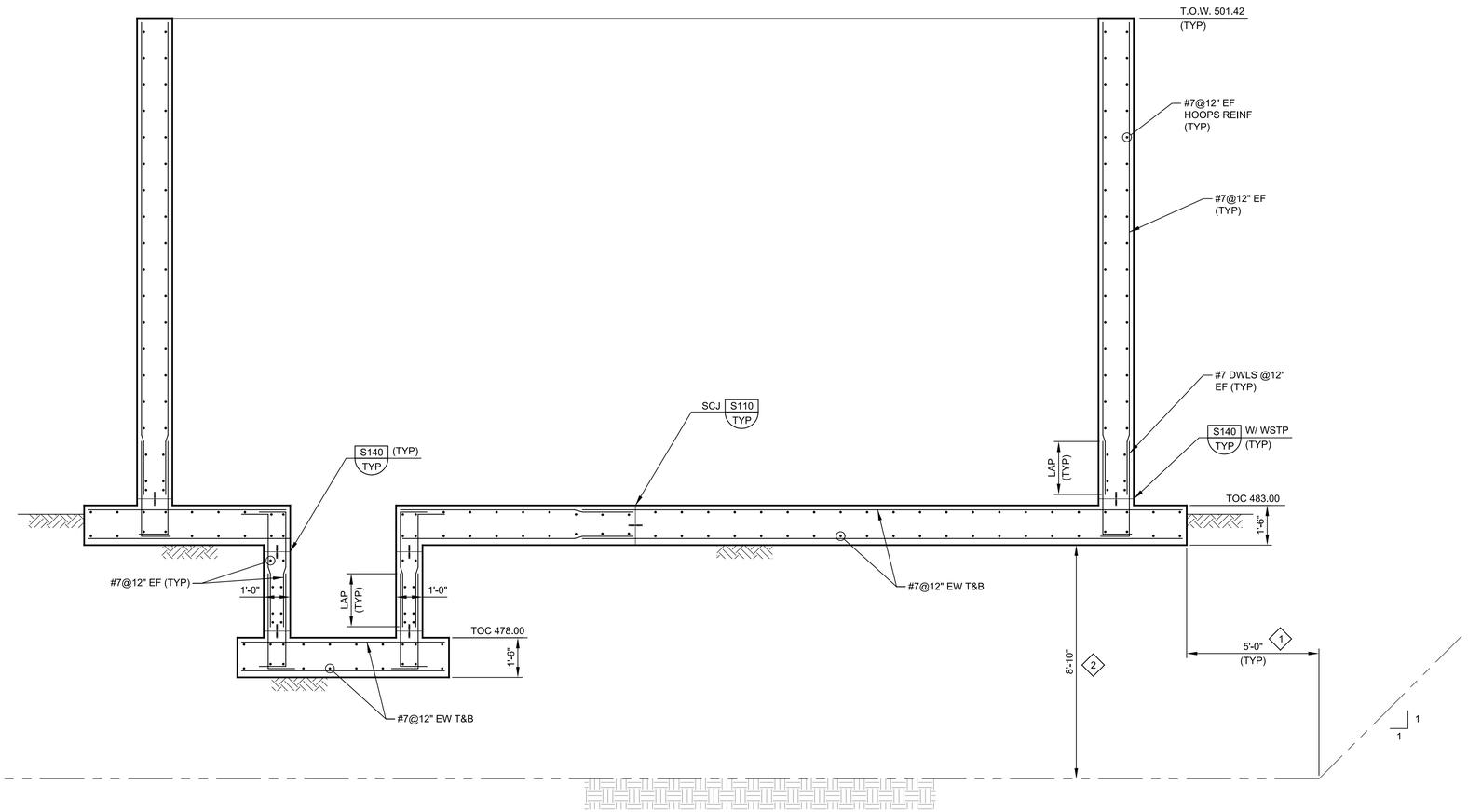

C 70S01 **SECTION**
SCALE: 3/8" = 1'-0"
FILE: 10976A1070S301

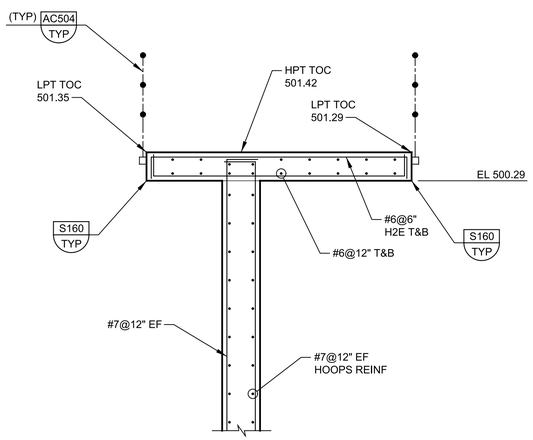

D 70S01 **SECTION**
SCALE: 3/8" = 1'-0"
FILE: 10976A1070S302

GENERAL NOTES:

1. FOR GENERAL STRUCTURAL NOTES SEE DRAWING ØØGSØ1.
2. SCJ = SLAB CONSTRUCTION JOINT PER DETAIL S11Ø/TYP.
3. FOR OPENINGS IN CONCRETE SLABS OR WALLS SEE S18Ø/TYP.
4. VERIFY COORDINATES WITH CIVIL DRAWINGS.

KEY NOTES:

1 REMOVE AND REPLACE EXISTING SOIL WITH SELECT FILL FOR MINIMUM OF 5'-Ø" OUTSIDE THE STRUCTURE FOOTPRINT.

2 FOR FOUNDATION AND SUBGRADE PREPARATION, SEE GENERAL STRUCTURAL NOTES DRAWING ØØGSØ1.

THIS CONFORMED DOCUMENT IS RELEASED FOR THE CONVENIENCE OF THE CONTRACTOR UNDER THE AUTHORITY OF:

DANNY M HURTADO, P.E.
TX LIC NO. 104266

11-01-22
DATE

SEE DISCLAIMER FOR LIMITATIONS OF USE.

CONTRACT DOCUMENTS DATED JUNE 10, 2022, AS PART OF THE BIDDING DOCUMENTS (DRAWINGS AND SPECIFICATIONS) AND SUBSEQUENTLY ISSUED ADDENDA HAVE BEEN MERGED INTO ONE CONFORMING SET OF DOCUMENTS FOR THE CONVENIENCE OF THE CONTRACTOR. IF INCONSISTENCIES OR AMBIGUITIES BETWEEN "CONFORMED" DOCUMENTS AND CONTRACT DOCUMENTS ARE FOUND, THE CONTRACT DOCUMENTS SHALL GOVERN.

REV	DATE	BY	DESCRIPTION
			CONFORMED DOCUMENTS

DESIGNED AAC
DRAWN TJD
CHECKED JDS
DATE NOVEMBER 2022

** ORIGINAL SEALED BY KWASI DUOSE 06-10-22 TX PE 100650 **

carollo® TBPELS No. F-882

CITY OF AUSTIN FOUNDED 1839

CITY OF AUSTIN

CITY OF AUSTIN
WILD HORSE RANCH WWTP EXPANSION
STRUCTURAL
SLUDGE HOLDING TANK 1
SECTIONS AND DETAILS 1

VERIFY SCALES
BAR IS ONE INCH ON ORIGINAL DRAWING
0 1"
IF NOT ONE INCH ON THIS SHEET, ADJUST SCALES ACCORDINGLY

JOB NO. 10976A.00
DRAWING NO. 70S02
SHEET NO. 375 OF 464

PROJECT NO. 10976A10 FILE NAME: 10976A1070S002.dgn

Plot Date: 10-OCT-2022 2:12:11 PM
User: LDietzel
PlotScale: 1:1
DesignScript: Carollo_Std_Pen_v0905.pen
ColorTable: gshade.ctb
Model: Layout1
LAST SAVED BY: jhill

THIS CONFORMED DOCUMENT IS RELEASED FOR THE CONVENIENCE OF THE CONTRACTOR UNDER THE AUTHORITY OF:

11-01-22
DANNY M HURTADO, P.E. DATE
TX LIC NO. 104266

SEE DISCLAIMER FOR LIMITATIONS OF USE.

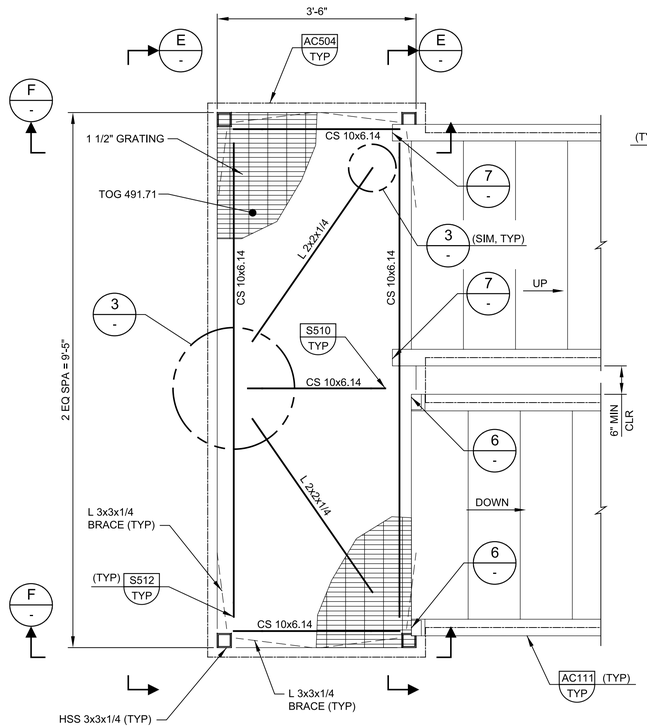

1 DETAIL (70S01)
SCALE: 3/4" = 1'-0"
FILE: 10976A1070S102

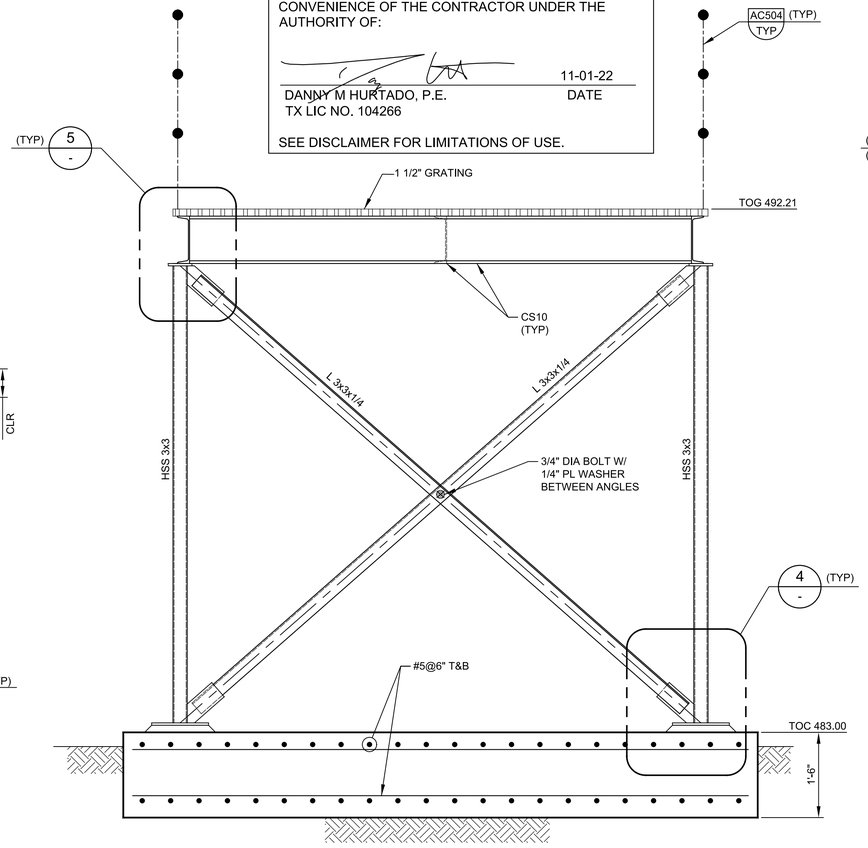

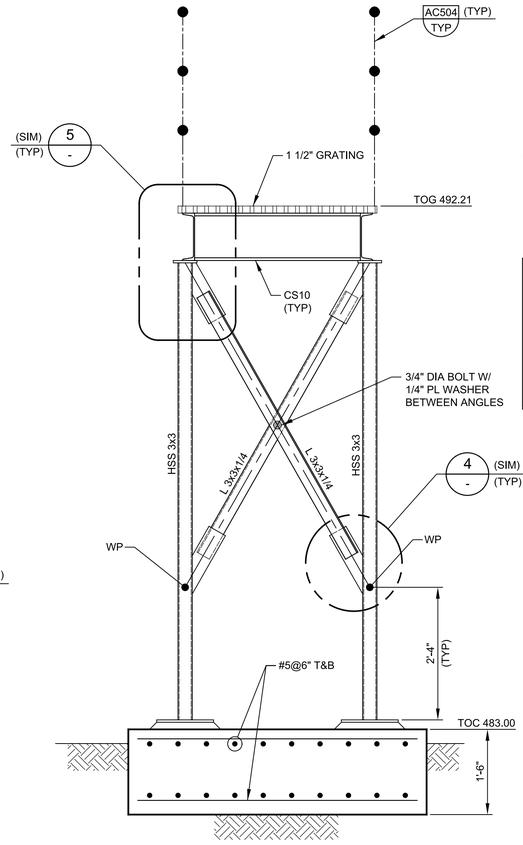

GENERAL NOTES:

1. FOR GENERAL STRUCTURAL NOTES SEE DRAWING 00GS01.
2. STAIRS, LANDING, GRATING AND SUPPORT MEMBERS TO BE ALUMINUM. ALL BOLTS AND ANCHOR BOLTS ARE STAINLESS STEEL.
3. FOR OPENINGS IN CONCRETE SLABS OR WALLS SEE S180/TYP.
4. VERIFY COORDINATES WITH CIVIL DRAWINGS.

KEY NOTES:

1 PROVIDE 1/2" WEB STIFFENER ON ALUMINUM BEAM AND STRINGERS WITH 1/4" FILLET WELDS ON EACH SIDE OF THE WEB STIFFENER AT ALL GUARDRAIL POST LOCATIONS. COORDINATE LOCATION OF WEB STIFFENER WITH ALUMINUM GUARDRAIL MANUFACTURER.

CONTRACT DOCUMENTS DATED JUNE 10, 2022, AS PART OF THE BIDDING DOCUMENTS (DRAWINGS AND SPECIFICATIONS) AND SUBSEQUENTLY ISSUED ADDENDA HAVE BEEN MERGED INTO ONE CONFORMING SET OF DOCUMENTS FOR THE CONVENIENCE OF THE CONTRACTOR. IF INCONSISTENCIES OR AMBIGUITIES BETWEEN "CONFORMED" DOCUMENTS AND CONTRACT DOCUMENTS ARE FOUND, THE CONTRACT DOCUMENTS SHALL GOVERN.

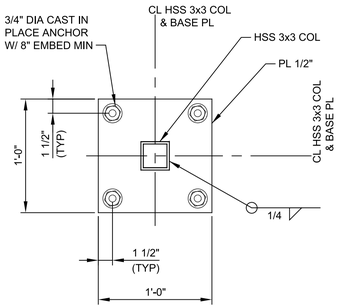

2 DETAIL (70S01)
SCALE: 1 1/2" = 1'-0"
FILE: 10976A1070S101

E SECTION (-)
SCALE: 3/4" = 1'-0"
FILE: 10976A1070S401

F SECTION (-)
SCALE: 3/4" = 1'-0"
FILE: 10976A1070S401

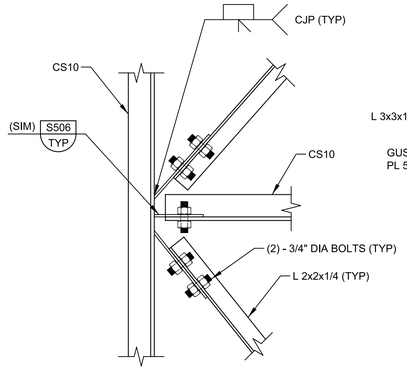

3 DETAIL (-)
SCALE: 1 1/2" = 1'-0"
FILE: 10976A1070S401

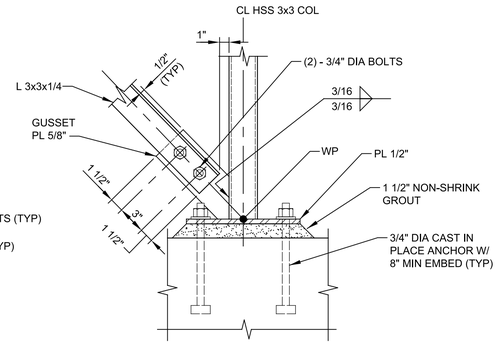

4 DETAIL (-)
SCALE: 1 1/2" = 1'-0"
FILE: 10976A1070S401

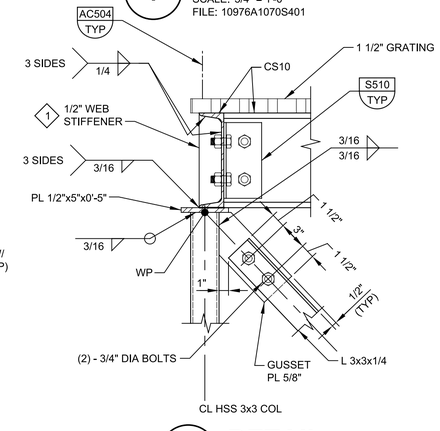

5 DETAIL (-)
SCALE: 1 1/2" = 1'-0"
FILE: 10976A1070S401

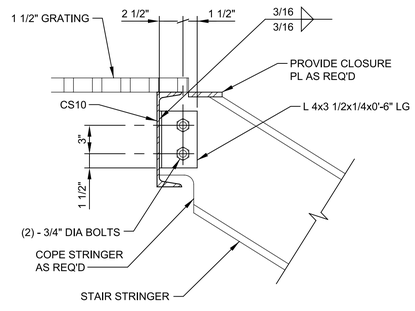

6 DETAIL (-)
SCALE: 1 1/2" = 1'-0"
FILE: 10976A1070S401

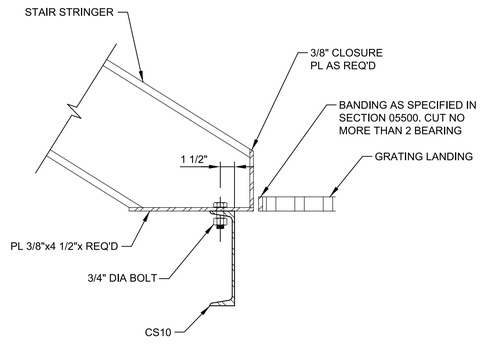

7 DETAIL (-)
SCALE: 1 1/2" = 1'-0"
FILE: 10976A1070S401

REV	DATE	BY	DESCRIPTION
			CONFORMED DOCUMENTS

DESIGNED AAC
DRAWN TJD
CHECKED JDS
DATE NOVEMBER 2022

** ORIGINAL SEALED BY KWASI DUOSE 06-10-22 TX PE 100650 **

carollo® TBPELS No. F-882

CITY OF AUSTIN

CITY OF AUSTIN
WILD HORSE RANCH WWTP EXPANSION
STRUCTURAL
SLUDGE HOLDING TANK 1
SECTIONS AND DETAILS 2

VERIFY SCALES
BAR IS ONE INCH ON ORIGINAL DRAWING
0 1"
IF NOT ONE INCH ON THIS SHEET, ADJUST SCALES ACCORDINGLY

JOB NO. 10976A.00
DRAWING NO. 70S03
SHEET NO. 376 OF 464

PROJECT NO. 10976A10 FILE NAME: 10976A1070S003.dgn

LAST SAVED BY: jhill Model: Layout1 ColorTable: gshade.ctb DesignScript: Carollo_Std_Pen_v0905.pen PlotScale: 1:1 User: LDietzel Plot Date: 10-OCT-2022 2:16:54 PM

Plot Date: 10-OCT-2022 2:18:50 PM
User: LDietzel
Model: Layout1 ColorTable: gshade.ctb DesignScript: Carollo_Std_Pen_v0905.pen PlotScale: 1:1
LAST SAVED BY: denriquez

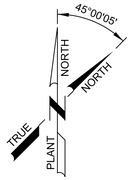

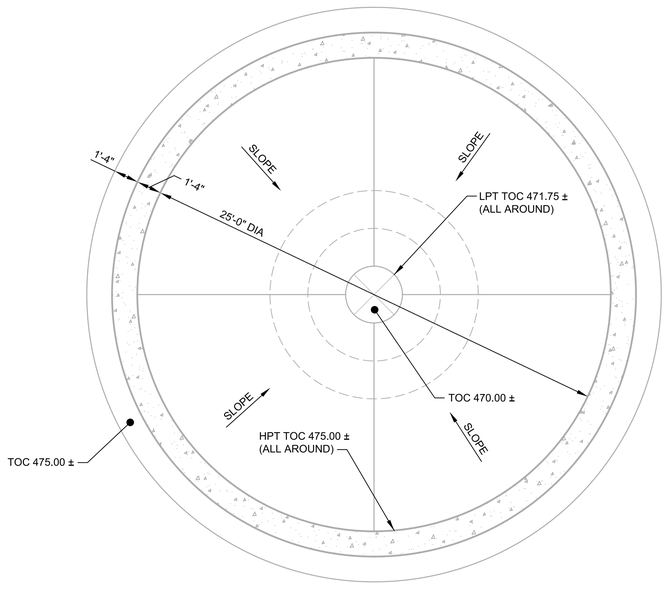

A FOUNDATION PLAN

SCALE: 1/4" = 1'-0"
FILE: 10976A1071S101

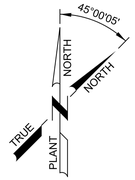

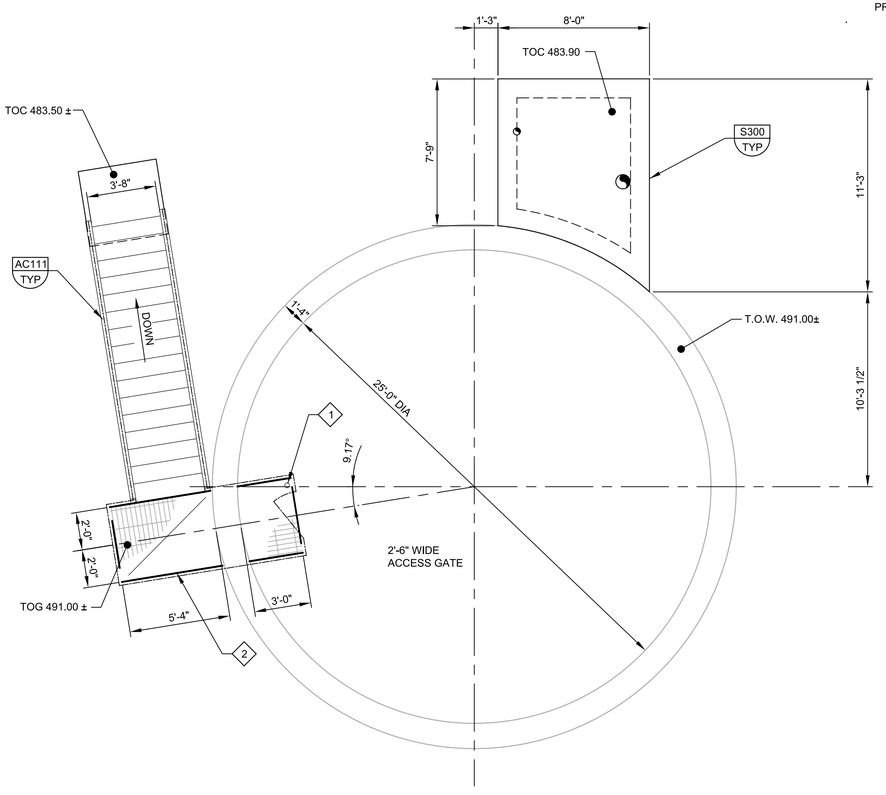

B TOP PLAN

SCALE: 1/4" = 1'-0"
FILE: 10976A1071S102

GENERAL NOTES:

1. FOR GENERAL STRUCTURAL NOTES SEE DRAWING 00GS01.
2. FOR OPENINGS IN CONCRETE SLABS OR WALLS SEE S180/TYP.
3. VERIFY COORDINATES WITH CIVIL DRAWINGS.

KEY NOTES:

1 ACCESS SWING GATE AS PART OF ALUMINUM HANDRAIL SHALL PROVIDE OPERATIONAL ACCESS TO SLUDGE HOLDING TANK FLOOR. DBI SALA CENTER MOUNT DAVIT SLEEVE SHALL BE PROVIDED ADJACENT TO ACCESS GATE.

2 NPW HOSE BIBB LOCATED BELOW PLATFORM TO BE PRESERVED.

THIS CONFORMED DOCUMENT IS RELEASED FOR THE CONVENIENCE OF THE CONTRACTOR UNDER THE AUTHORITY OF:

11-01-22
DANNY M HURTADO, P.E. DATE
TX LIC NO. 104266

SEE DISCLAIMER FOR LIMITATIONS OF USE.

CONTRACT DOCUMENTS DATED JUNE 10, 2022, AS PART OF THE BIDDING DOCUMENTS (DRAWINGS AND SPECIFICATIONS) AND SUBSEQUENTLY ISSUED ADDENDA HAVE BEEN MERGED INTO ONE CONFORMING SET OF DOCUMENTS FOR THE CONVENIENCE OF THE CONTRACTOR. IF INCONSISTENCIES OR AMBIGUITIES BETWEEN "CONFORMED" DOCUMENTS AND CONTRACT DOCUMENTS ARE FOUND, THE CONTRACT DOCUMENTS SHALL GOVERN.

REV	DATE	BY	DESCRIPTION
			CONFORMED DOCUMENTS

DESIGNED AAC
DRAWN TJD
CHECKED JDS
DATE NOVEMBER 2022

** ORIGINAL SEALED BY KWASI DUOSE 06-10-22 TX PE 100650 **

carollo®
TBPELS No. F-882

CITY OF AUSTIN
FOUNDED 1839
CITY OF AUSTIN

CITY OF AUSTIN
WILD HORSE RANCH WWTP EXPANSION
STRUCTURAL
EXISTING SLUDGE HOLDING TANK 2
PLANS

VERIFY SCALES
BAR IS ONE INCH ON ORIGINAL DRAWING
0 1"
IF NOT ONE INCH ON THIS SHEET, ADJUST SCALES ACCORDINGLY

JOB NO. 10976A.00
DRAWING NO. 71S01
SHEET NO. 377 OF 464

Plot Date: 10-OCT-2022 2:20:38 PM
User: LDietzel
Model: Layout1 ColorTable: gshade.ctb DesignScript: Carollo_Std_Pen_v0905.pen PlotScale: 1:1
LAST SAVED BY: jhill

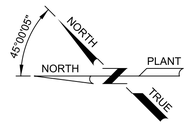

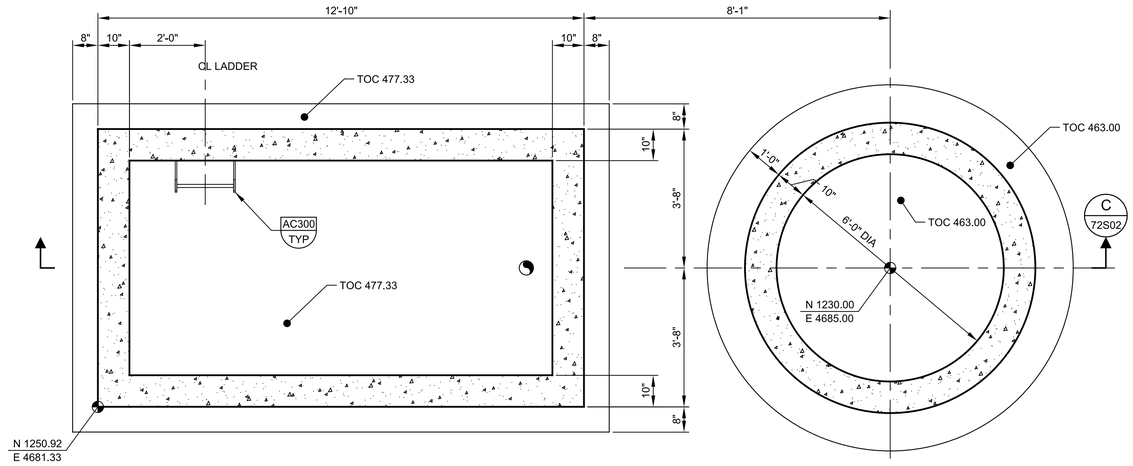

A LOWER PLAN

SCALE: 1/2" = 1'-0"
FILE: 10976A1072S101

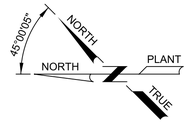

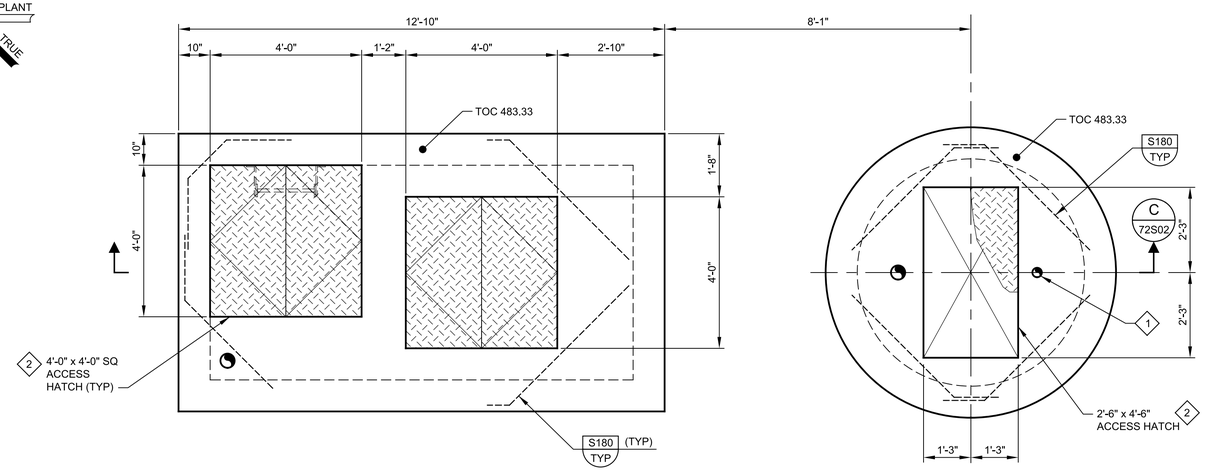

B UPPER PLAN

SCALE: 1/2" = 1'-0"
FILE: 10976A1072S102

GENERAL NOTES:

1. FOR GENERAL STRUCTURAL NOTES SEE DRAWING 00GS01.
2. LIVE LOAD = 100 PSF.
3. FOR OPENINGS IN CONCRETE SLABS OR WALLS SEE S180/TYP.
4. VERIFY COORDINATES WITH CIVIL DRAWINGS.

KEY NOTES:

1 DAVIT CRANE, SEE MECHANICAL DRAWINGS.

2 ACCESS HATCHES: ALUMINUM FRAME TYPE (TYP).

THIS CONFORMED DOCUMENT IS RELEASED FOR THE CONVENIENCE OF THE CONTRACTOR UNDER THE AUTHORITY OF:

DANNY M HURTADO, P.E.
TX LIC NO. 104266

11-01-22
DATE

SEE DISCLAIMER FOR LIMITATIONS OF USE.

CONTRACT DOCUMENTS DATED JUNE 10, 2022, AS PART OF THE BIDDING DOCUMENTS (DRAWINGS AND SPECIFICATIONS) AND SUBSEQUENTLY ISSUED ADDENDA HAVE BEEN MERGED INTO ONE CONFORMING SET OF DOCUMENTS FOR THE CONVENIENCE OF THE CONTRACTOR. IF INCONSISTENCIES OR AMBIGUITIES BETWEEN "CONFORMED" DOCUMENTS AND CONTRACT DOCUMENTS ARE FOUND, THE CONTRACT DOCUMENTS SHALL GOVERN.

REV	DATE	BY	DESCRIPTION
			CONFORMED DOCUMENTS

DESIGNED AAC
DRAWN TJD
CHECKED JDS
DATE NOVEMBER 2022

** ORIGINAL SEALED BY KWASI DUOSE 06-10-22 TX PE 100650 **

carollo®
TBPELS No. F-882

CITY OF AUSTIN
FOUNDED 1839

CITY OF AUSTIN

CITY OF AUSTIN
WILD HORSE RANCH WWTP EXPANSION
STRUCTURAL
PLANT DRAIN PUMP STATION PLANS

VERIFY SCALES
BAR IS ONE INCH ON ORIGINAL DRAWING
0 1"
IF NOT ONE INCH ON THIS SHEET, ADJUST SCALES ACCORDINGLY

JOB NO. 10976A.00
DRAWING NO. 72S01
SHEET NO. 378 OF 464

Plot Date: 10-OCT-2022 2:22:14 PM
User: LDietzel
Model: Layout1 ColorTable: gshade.ctb DesignScript: Carollo_Std_Pen_v0905.pen PlotScale: 1:1
LAST SAVED BY: jhill

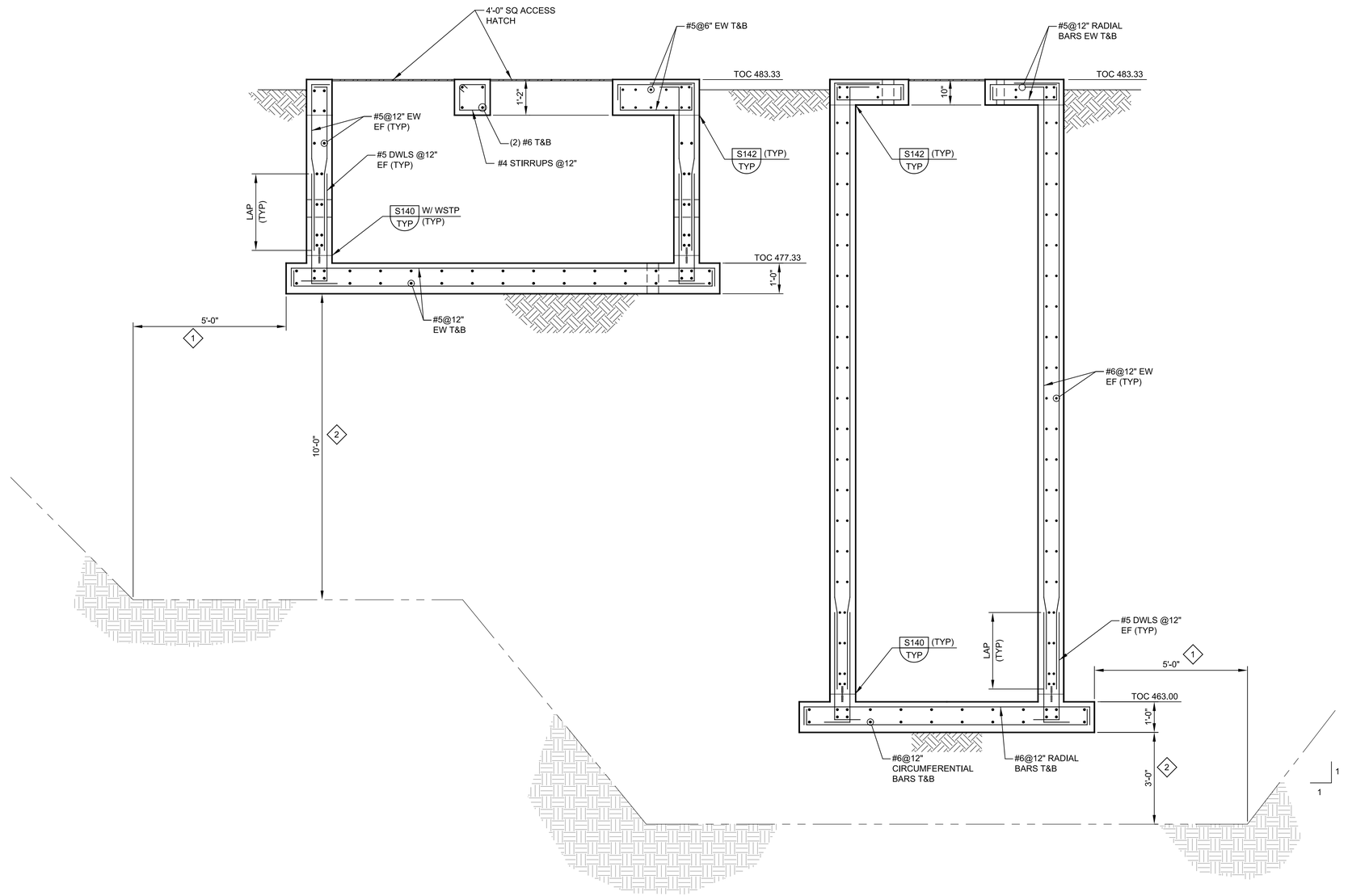

C SECTION
72S01
SCALE: 1/2" = 1'-0"
FILE: 10976A1072S301

GENERAL NOTES:

1. FOR GENERAL STRUCTURAL NOTES SEE DRAWING 00GS01.
2. FOR OPENINGS IN CONCRETE SLABS OR WALLS SEE S180/TYP.
3. VERIFY COORDINATES WITH CIVIL DRAWINGS.

KEY NOTES:

1 REMOVE AND REPLACE EXISTING SOIL WITH SELECT FILL FOR MINIMUM OF 5'-0" OUTSIDE THE STRUCTURE FOOTPRINT.

2 FOR FOUNDATION AND SUBGRADE PREPARATION, SEE GENERAL STRUCTURAL NOTES DRAWING 00GS01.

THIS CONFORMED DOCUMENT IS RELEASED FOR THE CONVENIENCE OF THE CONTRACTOR UNDER THE AUTHORITY OF:

11-01-22
DANNY M HURTADO, P.E. DATE
TX LIC NO. 104266

SEE DISCLAIMER FOR LIMITATIONS OF USE.

CONTRACT DOCUMENTS DATED JUNE 10, 2022, AS PART OF THE BIDDING DOCUMENTS (DRAWINGS AND SPECIFICATIONS) AND SUBSEQUENTLY ISSUED ADDENDA HAVE BEEN MERGED INTO ONE CONFORMING SET OF DOCUMENTS FOR THE CONVENIENCE OF THE CONTRACTOR. IF INCONSISTENCIES OR AMBIGUITIES BETWEEN "CONFORMED" DOCUMENTS AND CONTRACT DOCUMENTS ARE FOUND, THE CONTRACT DOCUMENTS SHALL GOVERN.

REV	DATE	BY	DESCRIPTION
			CONFORMED DOCUMENTS

DESIGNED AAC
DRAWN TJD
CHECKED JDS
DATE NOVEMBER 2022

** ORIGINAL SEALED BY KWASI DUOSE 06-10-22 TX PE 100650 **

carollo® TBPELS No. F-882

CITY OF AUSTIN FOUNDED 1839 **CITY OF AUSTIN**

CITY OF AUSTIN
WILD HORSE RANCH WWTP EXPANSION
STRUCTURAL
PLANT DRAIN PUMP STATION SECTIONS AND DETAILS

VERIFY SCALES
BAR IS ONE INCH ON ORIGINAL DRAWING
0 1"
IF NOT ONE INCH ON THIS SHEET, ADJUST SCALES ACCORDINGLY

JOB NO. 10976A.00
DRAWING NO. 72S02
SHEET NO. 379 OF 464

PROJECT NO. 10976A10 FILE NAME: 10976A1072S002.dgn

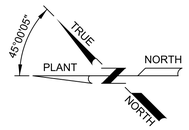

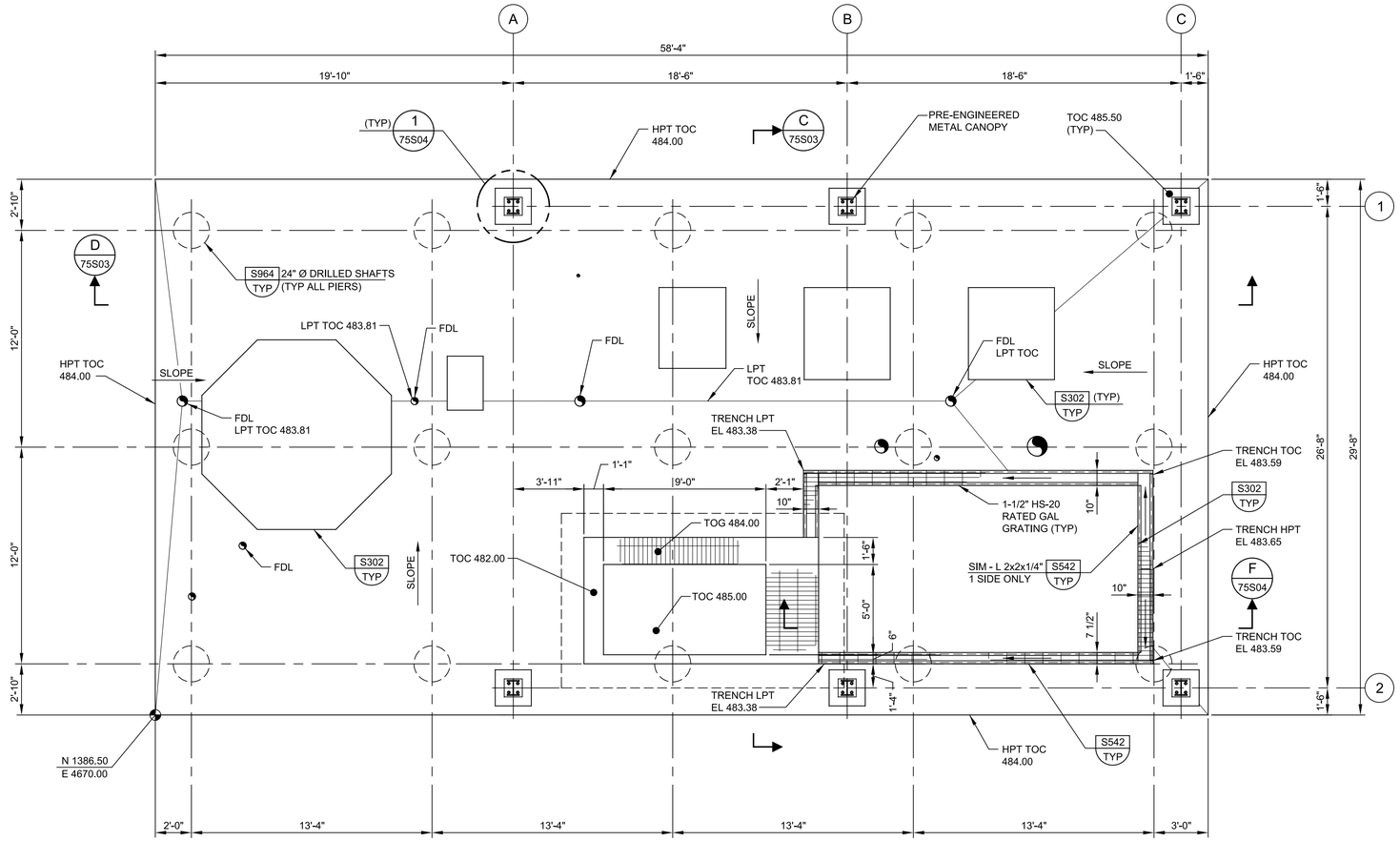

A FOUNDATION PLAN

SCALE: 1/4" = 1'-0"
FILE: 10976A1075S101

GENERAL NOTES:

1. FOR GENERAL STRUCTURAL NOTES SEE DRAWING 00GS01.
2. FLOOR LIVE LOAD = 200 PSF.
3. CANOPY ROOF DESIGN LIVE LOAD = 20 PSF.
4. FOR OPENINGS IN CONCRETE SLABS OR WALLS SEE S180/TYP.
5. VERIFY COORDINATES WITH CIVIL DRAWINGS.

PRE-ENGINEERED METAL CANOPY NOTES:

1. CANOPY STRUCTURE AND ANCHORAGE SHALL BE DESIGNED BY THE CANOPY MANUFACTURER PER SPECIFICATION SECTION 13122. FRAMES, COLUMN, BEAMS, AND OTHER CANOPY RELATED DESIGN ELEMENTS ARE DESIGNED BY THE CANOPY MANUFACTURER. LOCATED COLUMNS WHERE SHOWN. AT LEAST FOUR (4) ANCHORS RODS ARE REQUIRED PER COLUMN BASE PLATES.
2. MINIMUM BUILDING FOUNDATION DIMENSIONS AND REINFORCEMENT ARE SHOWN ON THIS DRAWING. FINAL DIMENSIONS AND REINFORCEMENT SHALL BE COORDINATED WITH THE ACTUAL BUILDING LOADS AS DETERMINED FROM THE APPROVED PRE-ENGINEERED METAL BUILDING SUBMITTAL.
3. THE PRE-ENGINEERED METAL CANOPY REACTIONS USED FOR THE FOUNDATION DESIGN HAVE BEEN ASSUMED AND ARE LISTED ON THIS SHEET.

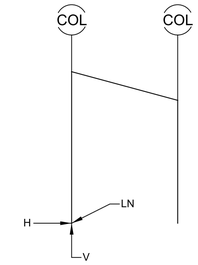

COLUMN LOAD REACTIONS (KIPS)		
LOAD GROUP	H	V
DEAD LOAD	1.0	4.0
ROOF LIVE LOAD	1.5	6.0
WIND LOAD	-4.0	1.0

FRAME DIAGRAM W/ COLUMN SERVICE (UNFACTORED) LEVEL REACTION

THIS CONFORMED DOCUMENT IS RELEASED FOR THE CONVENIENCE OF THE CONTRACTOR UNDER THE AUTHORITY OF:

DANNY M HURTADO, P.E.
TX LIC NO. 104266

11-01-22
DATE

SEE DISCLAIMER FOR LIMITATIONS OF USE.

CONTRACT DOCUMENTS DATED JUNE 10, 2022, AS PART OF THE BIDDING DOCUMENTS (DRAWINGS AND SPECIFICATIONS) AND SUBSEQUENTLY ISSUED ADDENDA HAVE BEEN MERGED INTO ONE CONFORMING SET OF DOCUMENTS FOR THE CONVENIENCE OF THE CONTRACTOR. IF INCONSISTENCIES OR AMBIGUITIES BETWEEN "CONFORMED" DOCUMENTS AND CONTRACT DOCUMENTS ARE FOUND, THE CONTRACT DOCUMENTS SHALL GOVERN.

REV	DATE	BY	DESCRIPTION
			CONFORMED DOCUMENTS

DESIGNED AAC
DRAWN TJD
CHECKED JDS
DATE NOVEMBER 2022

** ORIGINAL SEALED BY KWASI DUOSE 06-10-22 TX PE 100650 **

carollo®
TBPELS No. F-882

CITY OF AUSTIN

CITY OF AUSTIN
WILD HORSE RANCH WWTP EXPANSION
STRUCTURAL
THICKENING BUILDING FOUNDATION PLAN

VERIFY SCALES
BAR IS ONE INCH ON ORIGINAL DRAWING
0 1"
IF NOT ONE INCH ON THIS SHEET, ADJUST SCALES ACCORDINGLY

JOB NO. 10976A.00
DRAWING NO. 75S01
SHEET NO. 380 OF 464

PROJECT NO. 10976A10 FILE NAME: 10976A1075S001.dgn

Plot Date: 10-OCT-2022 2:24:04 PM
User: LDietzel
Model: Layout1 ColorTable: gshade.ctb DesignScript: Carollo_Std_Pen_v0905.pen PlotScale: 1:1
LAST SAVED BY: jhill

Plot Date: 10-OCT-2022 2:25:44 PM
User: LDietzel
PlotScale: 1:1
DesignScript: Carollo_Std_Pen_v0905.pen
ColorTable: gshade.ctb
Model: Layout1
LAST SAVED BY: jhill

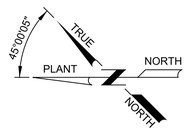

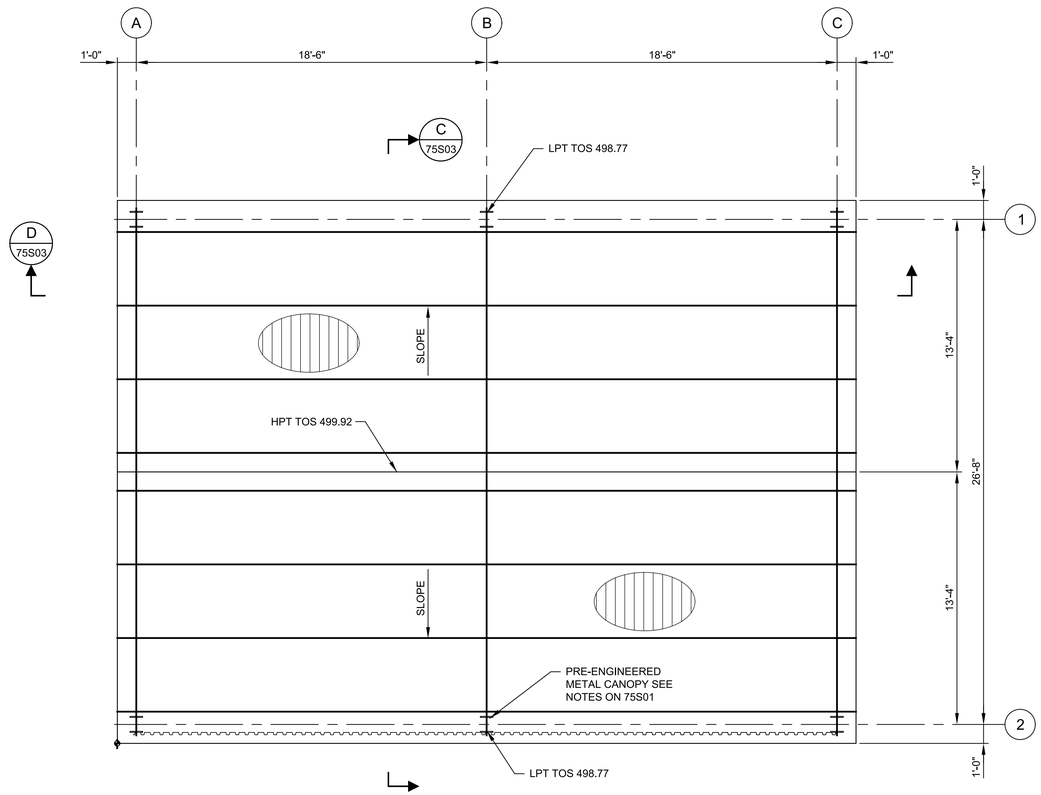

B CANOPY FRAMING PLAN

SCALE: 1/4" = 1'-0"
FILE: 10976A1075S102

GENERAL NOTES:

1. FOR GENERAL STRUCTURAL NOTES SEE DRAWING 00GS01.
2. CANOPY ROOF DESIGN LIVE LOAD = 20 PSF.
3. FOR OPENINGS IN CONCRETE SLABS OR WALLS SEE S180/TYP.
4. VERIFY COORDINATES WITH CIVIL DRAWINGS.

THIS CONFORMED DOCUMENT IS RELEASED FOR THE CONVENIENCE OF THE CONTRACTOR UNDER THE AUTHORITY OF:

11-01-22

DANNY M HURTADO, P.E. DATE
TX LIC NO. 104266

SEE DISCLAIMER FOR LIMITATIONS OF USE.

CONTRACT DOCUMENTS DATED JUNE 10, 2022, AS PART OF THE BIDDING DOCUMENTS (DRAWINGS AND SPECIFICATIONS) AND SUBSEQUENTLY ISSUED ADDENDA HAVE BEEN MERGED INTO ONE CONFORMING SET OF DOCUMENTS FOR THE CONVENIENCE OF THE CONTRACTOR. IF INCONSISTENCIES OR AMBIGUITIES BETWEEN "CONFORMED" DOCUMENTS AND CONTRACT DOCUMENTS ARE FOUND, THE CONTRACT DOCUMENTS SHALL GOVERN.

REV	DATE	BY	DESCRIPTION
			CONFORMED DOCUMENTS

DESIGNED AAC
DRAWN TJD
CHECKED JDS
DATE NOVEMBER 2022

** ORIGINAL SEALED BY KWASI DUOSE 06-10-22 TX PE 100650 **

carollo®
TBPELS No. F-882

CITY OF AUSTIN
FOUNDED 1839
CITY OF AUSTIN

CITY OF AUSTIN
WILD HORSE RANCH WWTP EXPANSION
STRUCTURAL
THICKENING BUILDING
CANOPY FRAMING PLAN

VERIFY SCALES
BAR IS ONE INCH ON ORIGINAL DRAWING
0 1"
IF NOT ONE INCH ON THIS SHEET, ADJUST SCALES ACCORDINGLY

JOB NO. 10976A.00
DRAWING NO. 75S02
SHEET NO. 381 OF 464

Plot Date: 10-OCT-2022 2:27:24 PM
User: LDietzel
PlotScale: 1:1
DesignScript: Carollo_Std_Pen_v0905.pen
ColorTable: gshade.ctb
Model: Layout1
LAST SAVED BY: jhill

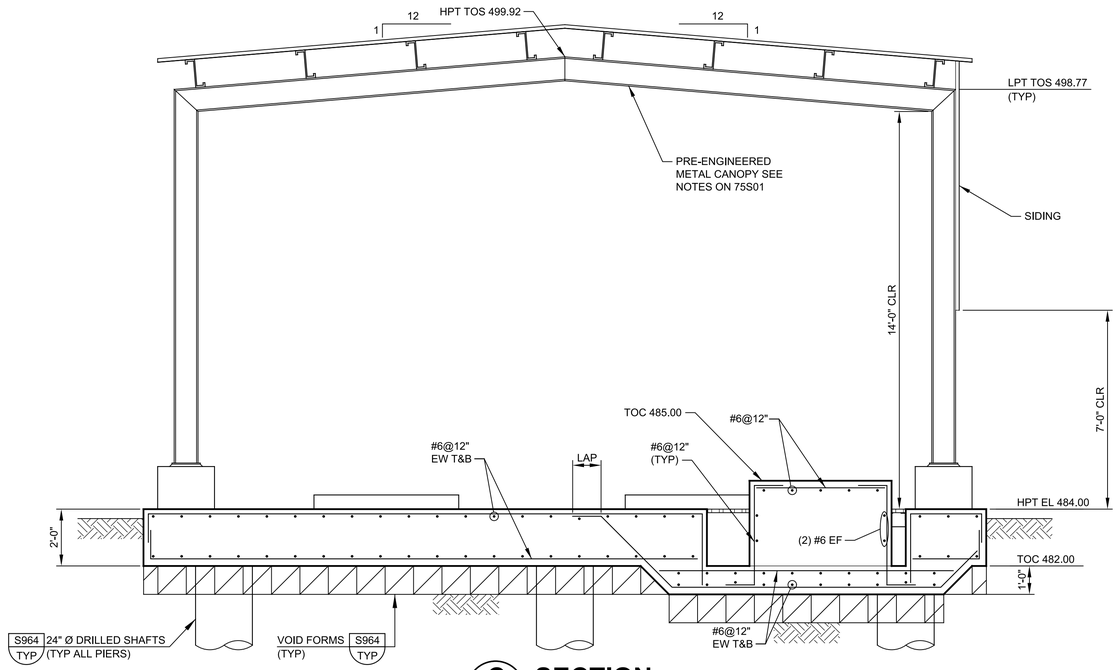

C SECTION
75S01
SCALE: 3/8" = 1'-0"
FILE: 10976A1075S301

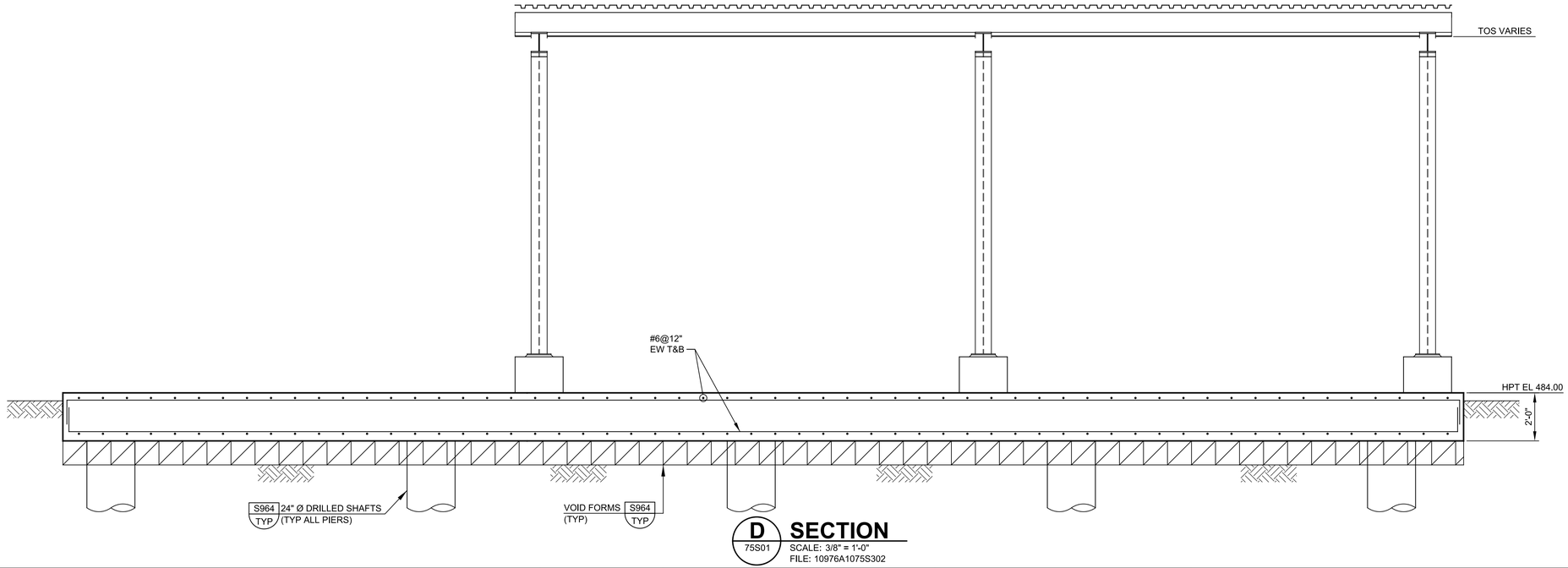

D SECTION
75S01
SCALE: 3/8" = 1'-0"
FILE: 10976A1075S302

GENERAL NOTES:

1. FOR GENERAL STRUCTURAL NOTES SEE DRAWING 00GS01.
2. FOR OPENINGS IN CONCRETE SLABS OR WALLS SEE S180/TYP.
3. VERIFY COORDINATES WITH CIVIL DRAWINGS.

THIS CONFORMED DOCUMENT IS RELEASED FOR THE CONVENIENCE OF THE CONTRACTOR UNDER THE AUTHORITY OF:

11-01-22

DANNY M HURTADO, P.E. DATE
TX LIC NO. 104266

SEE DISCLAIMER FOR LIMITATIONS OF USE.

CONTRACT DOCUMENTS DATED JUNE 10, 2022, AS PART OF THE BIDDING DOCUMENTS (DRAWINGS AND SPECIFICATIONS) AND SUBSEQUENTLY ISSUED ADDENDA HAVE BEEN MERGED INTO ONE CONFORMING SET OF DOCUMENTS FOR THE CONVENIENCE OF THE CONTRACTOR. IF INCONSISTENCIES OR AMBIGUITIES BETWEEN "CONFORMED" DOCUMENTS AND CONTRACT DOCUMENTS ARE FOUND, THE CONTRACT DOCUMENTS SHALL GOVERN.

REV	DATE	BY	DESCRIPTION
			CONFORMED DOCUMENTS

DESIGNED AAC
DRAWN TJD
CHECKED JDS
DATE NOVEMBER 2022

** ORIGINAL SEALED BY KWASI DUOSE 06-10-22 TX PE 100650 **

carollo®
TBPELS No. F-882

CITY OF AUSTIN
FOUNDED 1839

CITY OF AUSTIN

CITY OF AUSTIN
WILD HORSE RANCH WWTP EXPANSION
STRUCTURAL
THICKENING BUILDING
SECTIONS AND DETAILS 1

VERIFY SCALES
BAR IS ONE INCH ON ORIGINAL DRAWING
0 1"
IF NOT ONE INCH ON THIS SHEET, ADJUST SCALES ACCORDINGLY

JOB NO. 10976A.00
DRAWING NO. 75S03
SHEET NO. 382 OF 464

PROJECT NO. 10976A10 FILE NAME: 10976A1075S003.dgn

Plot Date: 10-OCT-2022 2:29:17 PM
User: LDietzel
PlotScale: 1:1
DesignScript: Carollo_Std_Pen_v0905.pen
ColorTable: gshade.ctb
Model: Layout1
LAST SAVED BY: jhill

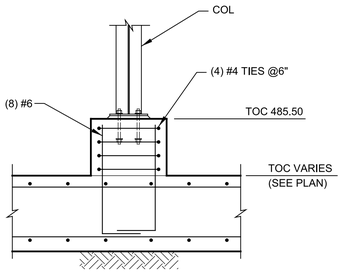

E SECTION
SCALE: 1/2" = 1'-0"
FILE: 10976A1075S303

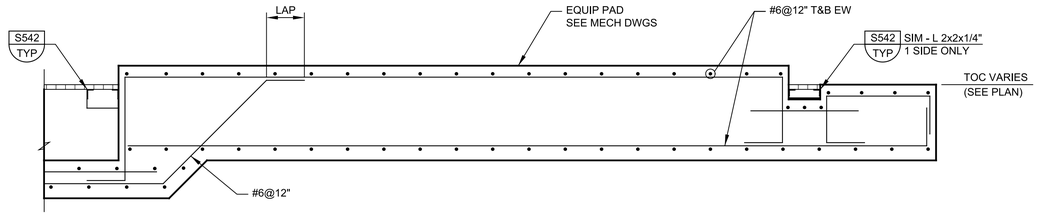

F SECTION
SCALE: 1/2" = 1'-0"
FILE: 10976A1075S304

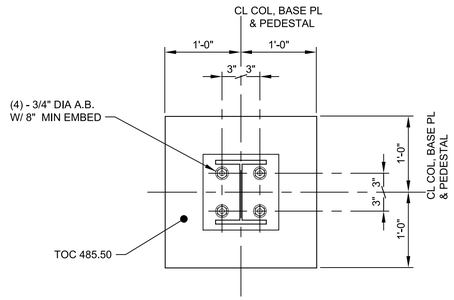

NOTES:
1. FOR REINFORCING SEE DET 2/-.

1 DETAIL
75S01
SCALE: 1" = 1'-0"
FILE: 10976A1075S101

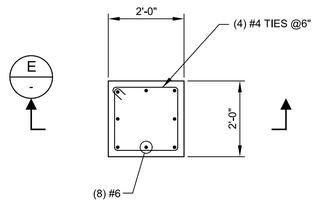

2 DETAIL
-
SCALE: 1/2" = 1'-0"
FILE: 10976A1075S401

GENERAL NOTES:

1. FOR GENERAL STRUCTURAL NOTES SEE DRAWING 00GS01.
2. FOR OPENINGS IN CONCRETE SLABS OR WALLS SEE S180/TYP.
3. VERIFY COORDINATES WITH CIVIL DRAWINGS.

.

THIS CONFORMED DOCUMENT IS RELEASED FOR THE CONVENIENCE OF THE CONTRACTOR UNDER THE AUTHORITY OF:

DANNY M HURTADO, P.E.
TX LIC NO. 104266

11-01-22
DATE

SEE DISCLAIMER FOR LIMITATIONS OF USE.

CONTRACT DOCUMENTS DATED JUNE 10, 2022, AS PART OF THE BIDDING DOCUMENTS (DRAWINGS AND SPECIFICATIONS) AND SUBSEQUENTLY ISSUED ADDENDA HAVE BEEN MERGED INTO ONE CONFORMING SET OF DOCUMENTS FOR THE CONVENIENCE OF THE CONTRACTOR. IF INCONSISTENCIES OR AMBIGUITIES BETWEEN "CONFORMED" DOCUMENTS AND CONTRACT DOCUMENTS ARE FOUND, THE CONTRACT DOCUMENTS SHALL GOVERN.

REV	DATE	BY	DESCRIPTION
			CONFORMED DOCUMENTS

DESIGNED AAC
DRAWN TJD
CHECKED JDS
DATE NOVEMBER 2022

** ORIGINAL SEALED BY KWASI DUOSE 06-10-22 TX PE 100650 **

carollo®
TBPELS No. F-882

CITY OF AUSTIN
FOUNDED 1839
CITY OF AUSTIN

CITY OF AUSTIN
WILD HORSE RANCH WWTP EXPANSION
STRUCTURAL
THICKENING BUILDING SECTIONS AND DETAILS 2

VERIFY SCALES
BAR IS ONE INCH ON ORIGINAL DRAWING
0 1"
IF NOT ONE INCH ON THIS SHEET, ADJUST SCALES ACCORDINGLY

JOB NO. 10976A.00
DRAWING NO. 75S04
SHEET NO. 383 OF 464

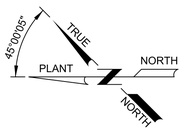

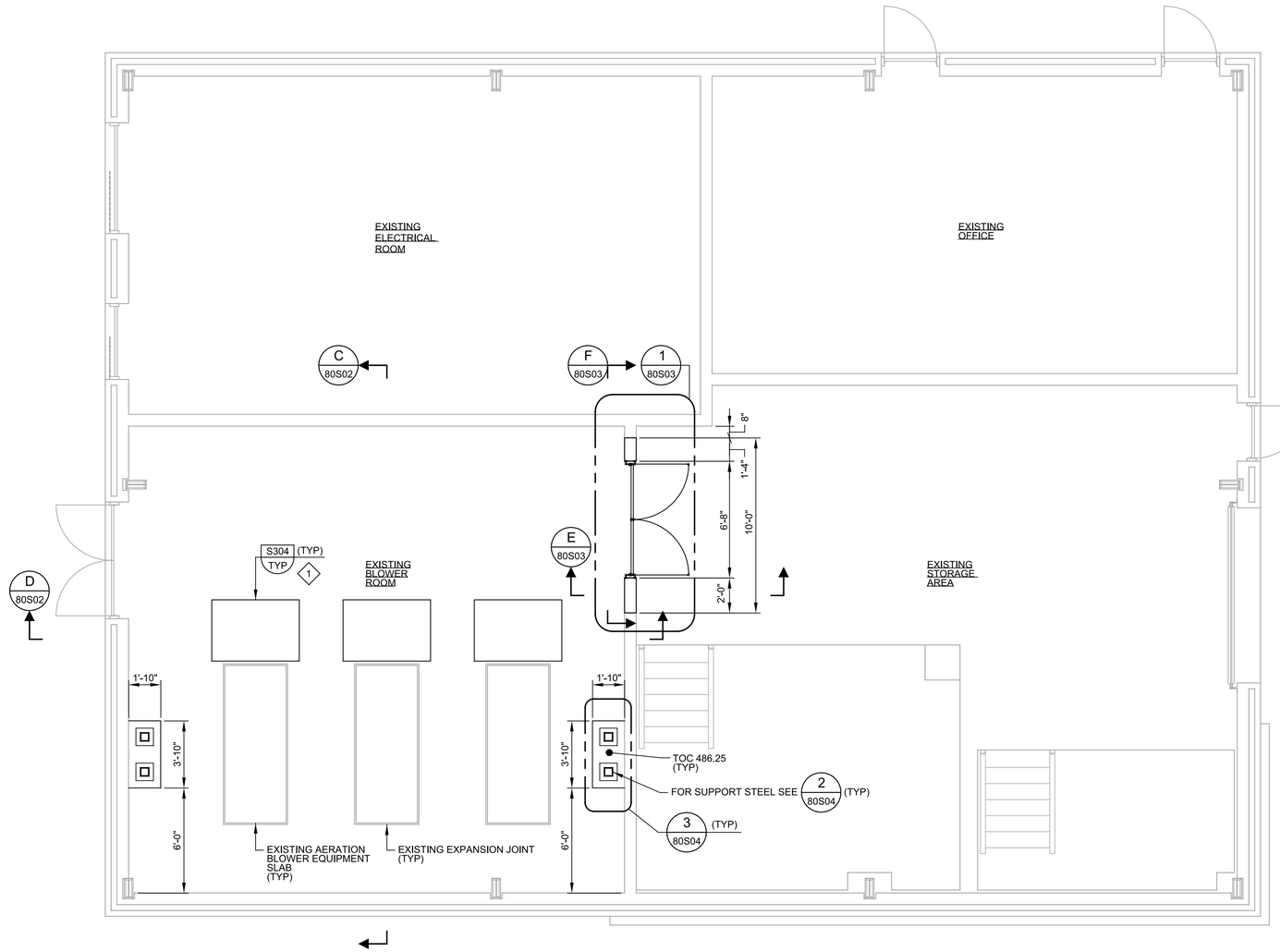

A EXISTING FOUNDATION PLAN

SCALE: 1/4" = 1'-0"
FILE: 10976A1080S101

GENERAL NOTES:

1. FOR GENERAL STRUCTURAL NOTES SEE DRAWING 00GS01.
2. SOLID GROUT ALL CMU CELLS AND DOOR FRAMES.
3. FOR MASONRY DETAILS, SEE S400/TYP, S410/TYP, S412/TYP, S430/TYP, S433/TYP, S440/TYP, AND S441/TYP.
4. ALL DIMENSIONS SHALL BE FIELD VERIFIED, EXISTING CONSTRUCTION SHOWN IS BASED ON EXISTING CONSTRUCTION DOCUMENTS AND SCREENED TO INDICATE EXTEND TO REMAIN.
5. REPAIR ADJACENT EXISTING CONSTRUCTION TO REMAIN THAT IS DAMAGED BY DEMOLITION.
6. DRAWINGS DO NOT SHOW THE EXTEND OF ALL EXISTING EQUIPMENT, CONDUIT, PIPING AND SIMILAR ITEMS MOUNTED ON EXISTING SUBSTRATE. CONTRACTOR SHALL FIELD VERIFY THE EXTEND AND LOCATION OF ALL SUCH ITEMS.
7. FOR OPENINGS IN CONCRETE SLABS OR WALLS SEE S180/TYP.
8. VERIFY COORDINATES WITH CIVIL DRAWINGS.

KEY NOTES:

1. CONFIRM EQUIPMENT PAD SIZE WITH EQUIPMENT MANUFACTURER.

THIS CONFORMED DOCUMENT IS RELEASED FOR THE CONVENIENCE OF THE CONTRACTOR UNDER THE AUTHORITY OF:

DANNY M HURTADO, P.E.
TX LIC NO. 104266

11-01-22
DATE

SEE DISCLAIMER FOR LIMITATIONS OF USE.

CONTRACT DOCUMENTS DATED JUNE 10, 2022, AS PART OF THE BIDDING DOCUMENTS (DRAWINGS AND SPECIFICATIONS) AND SUBSEQUENTLY ISSUED ADDENDA HAVE BEEN MERGED INTO ONE CONFORMING SET OF DOCUMENTS FOR THE CONVENIENCE OF THE CONTRACTOR. IF INCONSISTENCIES OR AMBIGUITIES BETWEEN "CONFORMED" DOCUMENTS AND CONTRACT DOCUMENTS ARE FOUND, THE CONTRACT DOCUMENTS SHALL GOVERN.

REV	DATE	BY	DESCRIPTION
			CONFORMED DOCUMENTS

DESIGNED AAC
DRAWN JLH
CHECKED JDS
DATE NOVEMBER 2022

** ORIGINAL SEALED BY KWASI DUOSE 06-10-22 TX PE 100650 **

carollo®
TBPELS No. F-882

CITY OF AUSTIN
FOUNDED 1839
CITY OF AUSTIN

CITY OF AUSTIN
WILD HORSE RANCH WWTP EXPANSION
STRUCTURAL
EXISTING OPERATIONS BUILDING FOUNDATION PLAN

VERIFY SCALES
BAR IS ONE INCH ON ORIGINAL DRAWING
0 1"
IF NOT ONE INCH ON THIS SHEET, ADJUST SCALES ACCORDINGLY

JOB NO. 10976A.00
DRAWING NO. 80S01
SHEET NO. 384 OF 464

PROJECT NO. 10976A10 FILE NAME: 10976A1080S001.dgn

Plot Date: 11-OCT-2022 7:21:03 AM
User: LDietzel
Model: Layout1 ColorTable: gshade.ctb DesignScript: Carollo_Std_Pen_v0905.pen PlotScale: 1:1
LAST SAVED BY: jhill

Plot Date: 11-OCT-2022 7:23:03 AM
User: LDietzel
PlotScale: 1:1
DesignScript: Carollo_Std_Pen_v0905.pen
ColorTable: gshade.ctb
Model: Layout1
LAST SAVED BY: jhill

GENERAL NOTES:

1. FOR GENERAL STRUCTURAL NOTES SEE DRAWING 00GS01.
2. SOLID GROUT ALL CMU CELLS.
3. FOR MASONRY DETAILS, SEE S400/TYP, S410/TYP, S412/TYP, S430/TYP, S433/TYP, S440/TYP, AND S441/TYP.
4. FOR OPENINGS IN CONCRETE SLABS OR WALLS SEE S180/TYP.
5. VERIFY COORDINATES WITH CIVIL DRAWINGS.

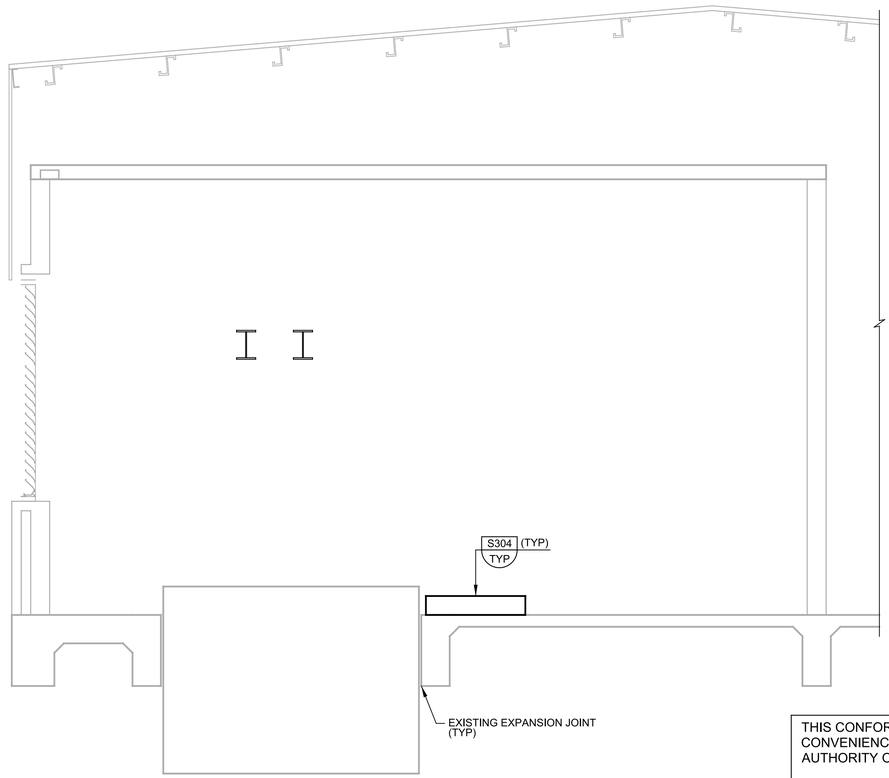

C SECTION
80S01
SCALE: 3/8" = 1'-0"
FILE: 10976A1080S301

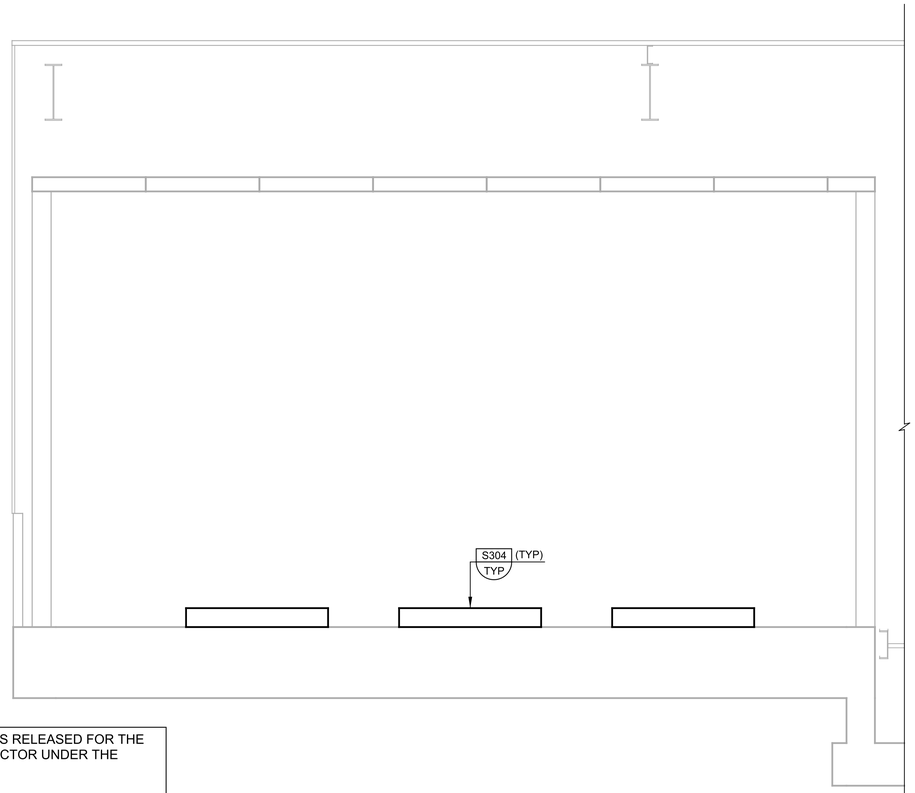

D SECTION
80S01
SCALE: 3/8" = 1'-0"
FILE: 10976A1080S302

THIS CONFORMED DOCUMENT IS RELEASED FOR THE CONVENIENCE OF THE CONTRACTOR UNDER THE AUTHORITY OF:

DANNY M HURTADO, P.E. — 11-01-22 DATE
TX LIC NO. 104266

SEE DISCLAIMER FOR LIMITATIONS OF USE.

CONTRACT DOCUMENTS DATED JUNE 10, 2022, AS PART OF THE BIDDING DOCUMENTS (DRAWINGS AND SPECIFICATIONS) AND SUBSEQUENTLY ISSUED ADDENDA HAVE BEEN MERGED INTO ONE CONFORMING SET OF DOCUMENTS FOR THE CONVENIENCE OF THE CONTRACTOR. IF INCONSISTENCIES OR AMBIGUITIES BETWEEN "CONFORMED" DOCUMENTS AND CONTRACT DOCUMENTS ARE FOUND, THE CONTRACT DOCUMENTS SHALL GOVERN.

REV	DATE	BY	DESCRIPTION
			CONFORMED DOCUMENTS

DESIGNED AAC
DRAWN JLH
CHECKED JDS
DATE NOVEMBER 2022

** ORIGINAL SEALED BY KWASI DUOSE 06-10-22 TX PE 100650 **

carollo®
TBPELS No. F-882

CITY OF AUSTIN
FOUNDED 1839

CITY OF AUSTIN

CITY OF AUSTIN
WILD HORSE RANCH WWTP EXPANSION
STRUCTURAL
EXISTING OPERATIONS BUILDING SECTIONS AND DETAILS 1

VERIFY SCALES
BAR IS ONE INCH ON ORIGINAL DRAWING
0 1"
IF NOT ONE INCH ON THIS SHEET, ADJUST SCALES ACCORDINGLY

JOB NO. 10976A.00
DRAWING NO. 80S02
SHEET NO. 385 OF 464

PROJECT NO. 10976A10 FILE NAME: 10976A1080S002.dgn

DOOR AND HARDWARE SCHEDULE

DOOR NO	DOOR WIDTH	DOOR HEIGHT	DOOR THICK	DOOR MATL	DOOR FINISH	DOOR STYLE	FRAME WIDTH	FRAME HEIGHT	FRAME THICK	FRAME TYPE	FRAME MATL	FRAME FINISH	DETAILS HEAD	DETAILS JAMB	DETAILS SILL	HARDWARE GROUP	UL LABEL	CARD READER	PANIC HARDWARE	REMARKS	DOOR NO
						AJ103 TYP				AJ100 TYP			AJ105 TYP	AJ107 TYP	AJ109 TYP						
001	(PR) 3'-2"	7'-10"	1 3/4"	HM	COATING	N	6'-8"	10'-0"	5 3/4"	R	HM	COATING	C	C	B	HW 01	NR	NR	NR		001

HARDWARE SET HW 01, DOOR: D-001				
STA	4 EA OR 8 TOTAL	BUTT HINGES	PER SPECIFICATION	630
LCN	2 EA	SURFACE MOUNTED CLOSER	TO SUIT SILL CONDITION	689
PEM	2 EA	DOOR SWEEP	PER SPECIFICATION	719
PEM	1 SET	GASKETING	PER SPECIFICATION	
VON	1 EA	PANIC BAR	E-99-L	626
DCI	2 EA	MANUAL FLUSH BOLT	PER SPECIFICATION	

GENERAL NOTES:

1. FOR GENERAL STRUCTURAL NOTES SEE DRAWING 00GS01.
2. SOLID GROUT ALL CMU CELLS.
3. FOR MASONRY DETAILS, SEE S400/TYP, S410/TYP, S412/TYP, S430/TYP, S433/TYP, S440/TYP, AND S441/TYP.
4. ALL DIMENSIONS SHALL BE FIELD VERIFIED, EXISTING CONSTRUCTION SHOWN IS BASED ON EXISTING CONSTRUCTION DOCUMENTS AND IS SCREENED TO INDICATED EXTEND TO REMAIN.
5. REPAIR ADJACENT EXISTING CONSTRUCTION TO REMAIN THAT IS DAMAGED BY DEMOLITION.
6. DRAWINGS DO NOT SHOW THE EXTENT OF ALL EXISTING EQUIPMENT, CONDUIT, PIPING, AND SIMILAR ITEMS MOUNTED ON EXISTING SUBSTRATE. CONTRACTOR SHALL FIELD VERIFY THE EXTENT AND LOCATION OF ALL SUCH ITEMS.
7. CONTRACTOR SHALL PROVIDE TEMPORARY SHORING/BRACING BELOW BOND BEAM PRIOR TO WALL DEMOLITION. TEMPORARY SHORING TO REMAIN UNTIL NEW WALL HAS BEEN PLACED IN ITS ENTIRETY AND ALL CMU HAS REACHED ITS DESIGN STRENGTH. CONTRACTOR TO DESIGN TEMPORARY BRACING. SUBMIT FOR FILES CALCULATIONS FOR TEMPORARY BRACING STAMPED BY ENGINEER REGISTERED IN THE STATE OF TEXAS.
8. FOR OPENINGS IN CONCRETE SLABS OR WALLS SEE S180/TYP.
9. VERIFY COORDINATES WITH CIVIL DRAWINGS.

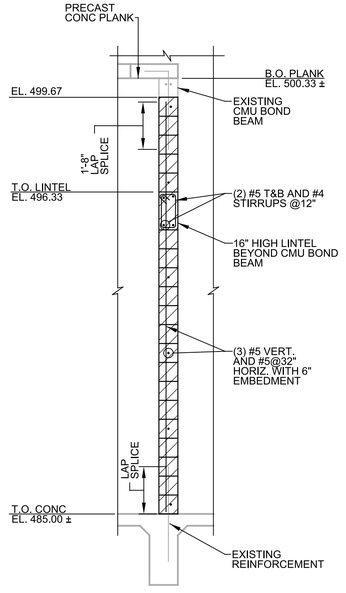

E SECTION
80S01
SCALE: 3/8" = 1'-0"
FILE: 10976A1080S303

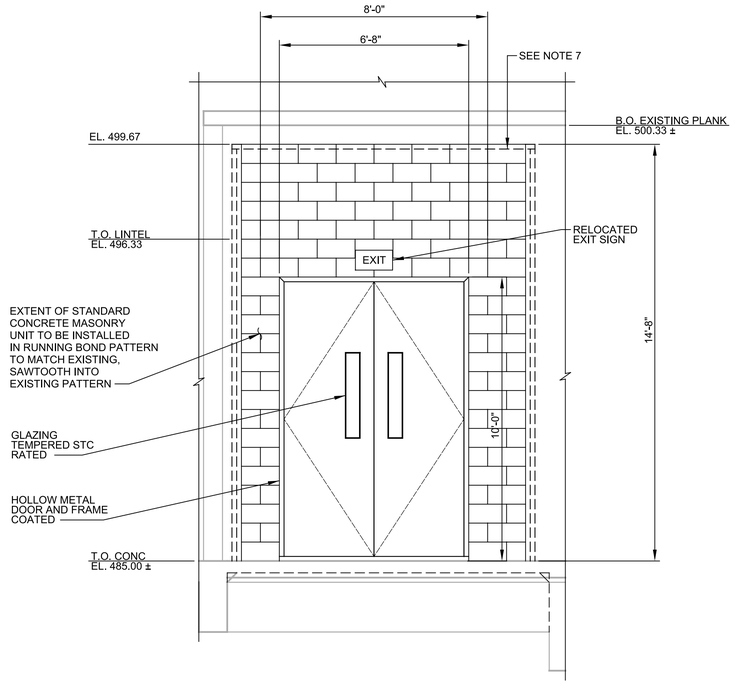

F INTERIOR ELEVATION
80S01
SCALE: 3/8" = 1'-0"
FILE: 10976A1080S304

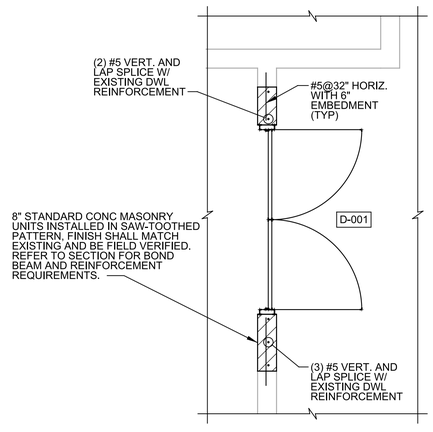

1 DETAIL
80S01
SCALE: 3/8" = 1'-0"
FILE: 10976A1080S101

THIS CONFORMED DOCUMENT IS RELEASED FOR THE CONVENIENCE OF THE CONTRACTOR UNDER THE AUTHORITY OF:

11-01-22
DANNY M HURTADO, P.E. DATE
TX LIC NO. 104266

SEE DISCLAIMER FOR LIMITATIONS OF USE.

CONTRACT DOCUMENTS DATED JUNE 10, 2022, AS PART OF THE BIDDING DOCUMENTS (DRAWINGS AND SPECIFICATIONS) AND SUBSEQUENTLY ISSUED ADDENDA HAVE BEEN MERGED INTO ONE CONFORMING SET OF DOCUMENTS FOR THE CONVENIENCE OF THE CONTRACTOR. IF INCONSISTENCIES OR AMBIGUITIES BETWEEN "CONFORMED" DOCUMENTS AND CONTRACT DOCUMENTS ARE FOUND, THE CONTRACT DOCUMENTS SHALL GOVERN.

REV	DATE	BY	DESCRIPTION
			CONFORMED DOCUMENTS

DESIGNED AAC
DRAWN JLH
CHECKED JDS
DATE NOVEMBER 2022

** ORIGINAL SEALED BY KWASI DUOSE 06-10-22 TX PE 100650 **

carollo® TBPELS No. F-882

CITY OF AUSTIN — FOUNDED 1839

CITY OF AUSTIN

CITY OF AUSTIN
WILD HORSE RANCH WWTP EXPANSION
STRUCTURAL
EXISTING OPERATIONS BUILDING SECTIONS AND DETAILS 2

VERIFY SCALES
BAR IS ONE INCH ON ORIGINAL DRAWING
0 1"
IF NOT ONE INCH ON THIS SHEET, ADJUST SCALES ACCORDINGLY

JOB NO. 10976A.00
DRAWING NO. 80S03
SHEET NO. 386 OF 464

PROJECT NO. 10976A10 FILE NAME: 10976A1080S003.dgn

Plot Date: 11-OCT-2022 7:24:47 AM
User: LDietzel
PlotScale: 1:1
DesignScript: Carollo_Std_Pen_v0905.pen
ColorTable: gshade.ctb
Model: Layout1
LAST SAVED BY: jhill

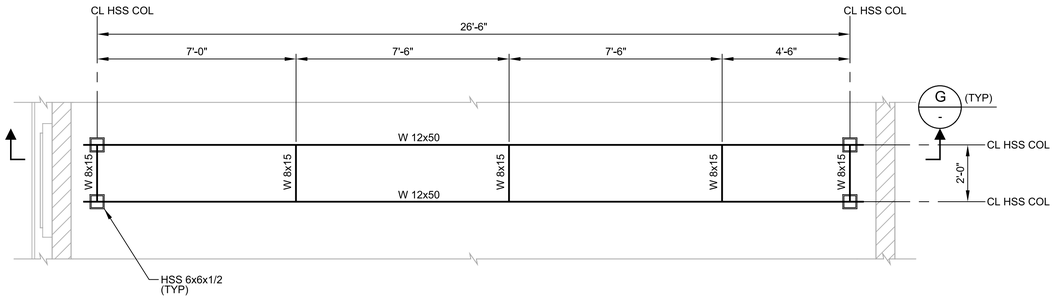

2 DETAIL
80S01
SCALE: 3/8" = 1'-0"
FILE: 10976A1080S103

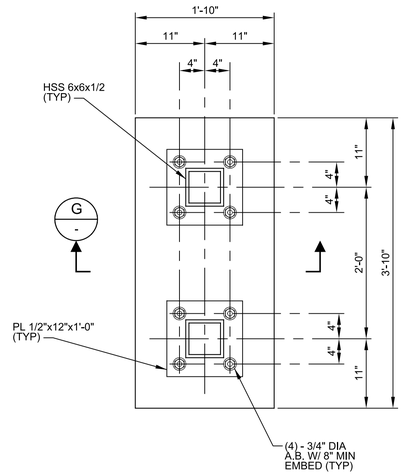

3 DETAIL
80S01
SCALE: 1" = 1'-0"
FILE: 10976A1080S101

GENERAL NOTES:

1. FOR GENERAL STRUCTURAL NOTES SEE DRAWING 00GS01.
2. PIPE SUPPORT MATERIAL SHALL BE HOT-DIP GALVANIZED STEEL UNLESS OTHERWISE INDICATED ON THE DRAWINGS.
3. FOR OPENINGS IN CONCRETE SLABS OR WALLS SEE S180/TYP.
4. VERIFY COORDINATES WITH CIVIL DRAWINGS.

THIS CONFORMED DOCUMENT IS RELEASED FOR THE CONVENIENCE OF THE CONTRACTOR UNDER THE AUTHORITY OF:

11-01-22

DANNY M HURTADO, P.E. — DATE
TX LIC NO. 104266

SEE DISCLAIMER FOR LIMITATIONS OF USE.

CONTRACT DOCUMENTS DATED JUNE 10, 2022, AS PART OF THE BIDDING DOCUMENTS (DRAWINGS AND SPECIFICATIONS) AND SUBSEQUENTLY ISSUED ADDENDA HAVE BEEN MERGED INTO ONE CONFORMING SET OF DOCUMENTS FOR THE CONVENIENCE OF THE CONTRACTOR. IF INCONSISTENCIES OR AMBIGUITIES BETWEEN "CONFORMED" DOCUMENTS AND CONTRACT DOCUMENTS ARE FOUND, THE CONTRACT DOCUMENTS SHALL GOVERN.

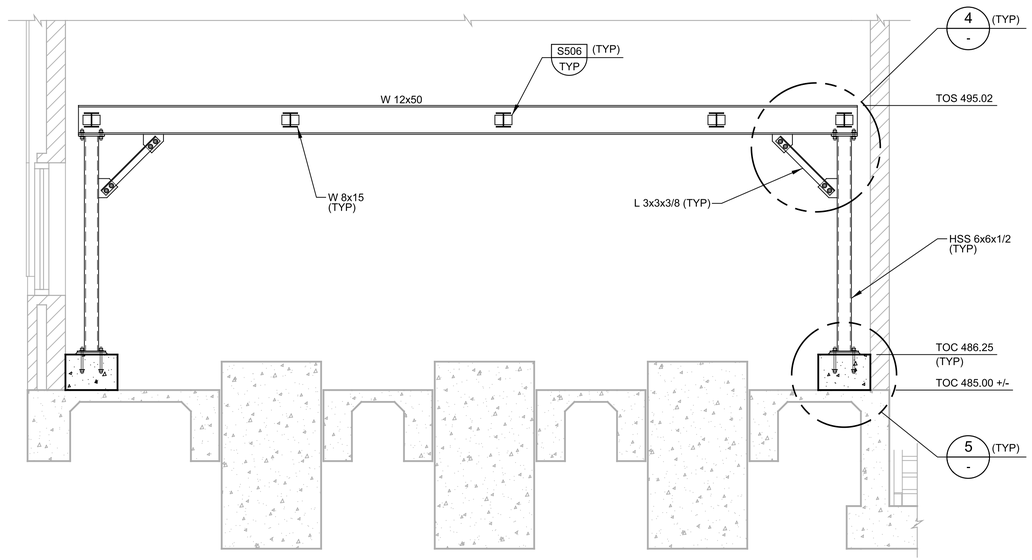

G DETAIL
80S01
SCALE: 3/8" = 1'-0"
FILE: 10976A1080S305

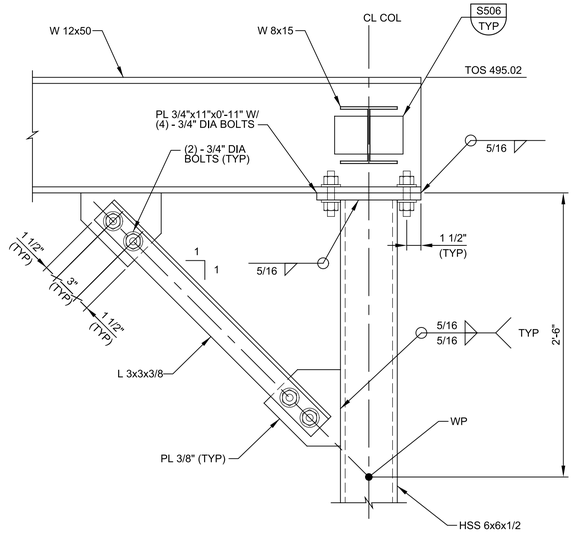

4 DETAIL
-
SCALE: 1 1/2" = 1'-0"
FILE: 10976A1080S305

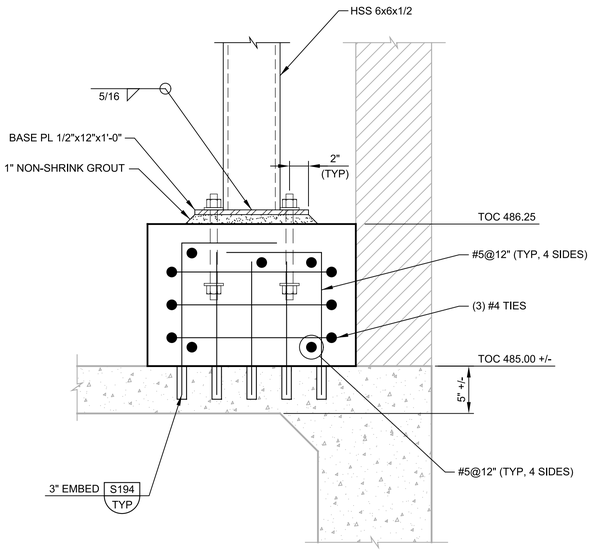

5 DETAIL
-
SCALE: 1 1/2" = 1'-0"
FILE: 10976A1080S305

REV	DATE	BY	DESCRIPTION
			CONFORMED DOCUMENTS

DESIGNED AAC
DRAWN TJD
CHECKED JDS
DATE NOVEMBER 2022

** ORIGINAL SEALED BY KWASI DUOSE 06-10-22 TX PE 100650 **

carollo®
TBPELS No. F-882

CITY OF AUSTIN
FOUNDED 1839
CITY OF AUSTIN

CITY OF AUSTIN
WILD HORSE RANCH WWTP EXPANSION
STRUCTURAL
EXISTING OPERATIONS BUILDING SECTIONS AND DETAILS 3

VERIFY SCALES
BAR IS ONE INCH ON ORIGINAL DRAWING
0 1"
IF NOT ONE INCH ON THIS SHEET, ADJUST SCALES ACCORDINGLY

JOB NO. 10976A.00
DRAWING NO. 80S04
SHEET NO. 387 OF 464

PROJECT NO. 10976A10 FILE NAME: 10976A1080S004.dgn

Plot Date: 11-OCT-2022 7:26:27 AM
User: LDietzel
Model: Layout1 ColorTable: gshade.ctb DesignScript: Carollo_Std_Pen_v0905.pen PlotScale: 1:1
LAST SAVED BY: jhill

Plot Date: 11-OCT-2022 7:28:09 AM
User: LDietzel
PlotScale: 1:1
DesignScript: Carollo_Std_Pen_v0905.pen
ColorTable: gshade.ctb
Model: Layout1
LAST SAVED BY: denriquez

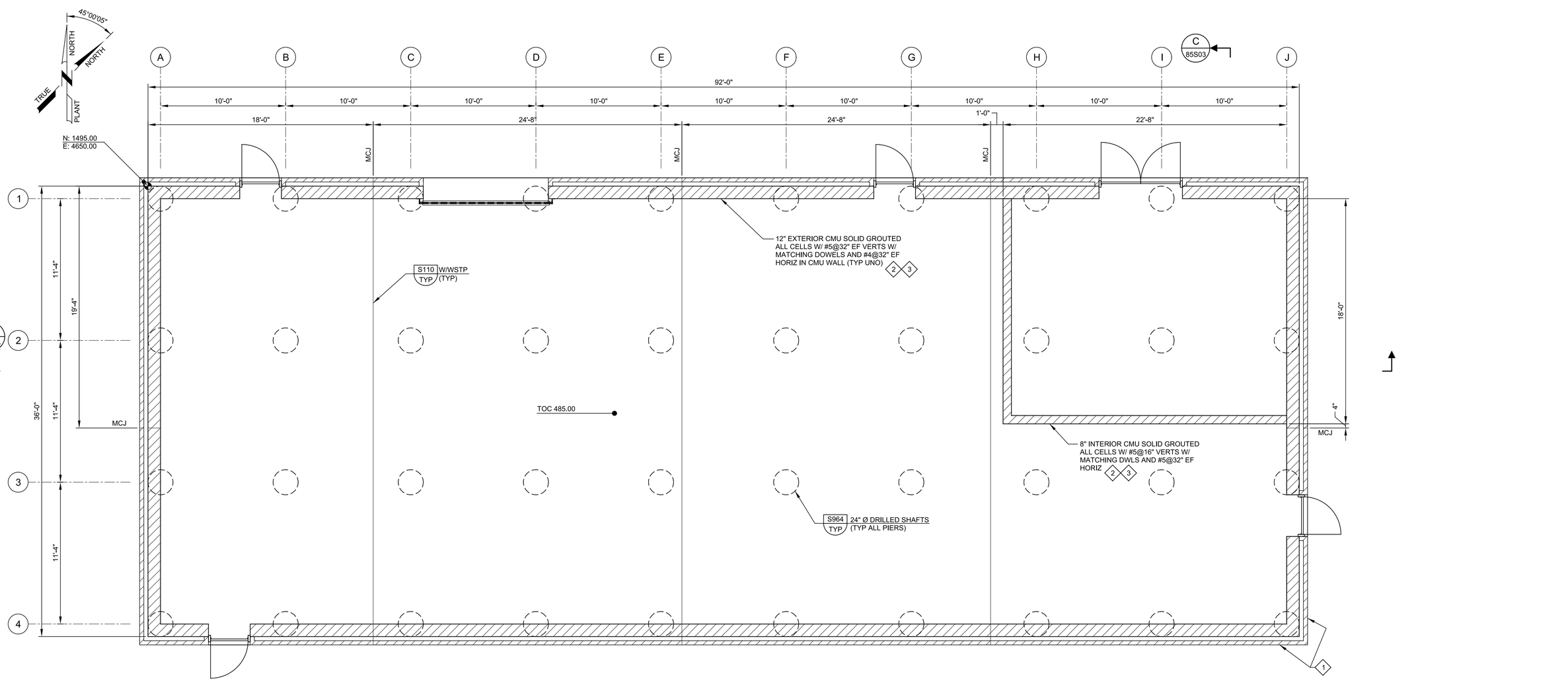

A FOUNDATION PLAN

SCALE: 1/4" = 1'-0"
FILE: 10976A85S101

GENERAL NOTES:

1. FOR GENERAL STRUCTURAL NOTES, SEE DWG 00GS01.
2. LIVE LOAD = 250 PSF.
3. FOR DOOR AND WINDOW LOCATIONS, SEE ARCH DRAWINGS.
4. FOR HOUSEKEEPING PAD SIZES AND LOCATIONS, SEE ELECTRICAL DRAWINGS.
5. FOR OPENINGS IN CONCRETE SLABS OR WALLS SEE S180/TYP.
6. VERIFY COORDINATES WITH CIVIL DRAWINGS.

KEY NOTES:

1 FOR JOINTS IN VENEER, SEE ARCH DRAWINGS AND SPECIFICATIONS. FOR ANCHORAGE OF VENEER TO CMU, SEE ARCH DRAWINGS

2 SOLID GROUT ALL CMU CELLS

3 FOR MASONRY DETAILS, SEE S400/TYP, S410/TYP, S412/TYP, S430/TYP, S433/TYP, S440/TYP, AND S441/TYP.

THIS CONFORMED DOCUMENT IS RELEASED FOR THE CONVENIENCE OF THE CONTRACTOR UNDER THE AUTHORITY OF:

DANNY M HURTADO, P.E.
TX LIC NO. 104266

11-01-22
DATE

SEE DISCLAIMER FOR LIMITATIONS OF USE.

CONTRACT DOCUMENTS DATED JUNE 10, 2022, AS PART OF THE BIDDING DOCUMENTS (DRAWINGS AND SPECIFICATIONS) AND SUBSEQUENTLY ISSUED ADDENDA HAVE BEEN MERGED INTO ONE CONFORMING SET OF DOCUMENTS FOR THE CONVENIENCE OF THE CONTRACTOR. IF INCONSISTENCIES OR AMBIGUITIES BETWEEN "CONFORMED" DOCUMENTS AND CONTRACT DOCUMENTS ARE FOUND, THE CONTRACT DOCUMENTS SHALL GOVERN.

REV	DATE	BY	DESCRIPTION
			CONFORMED DOCUMENTS

DESIGNED KMD
DRAWN JKK
CHECKED JDS
DATE NOVEMBER 2022

** ORIGINAL SEALED BY KWASI DUOSE 06-10-22 TX PE 100650 **

carollo®
TBPELS No. F-882

CITY OF AUSTIN
FOUNDED 1839

CITY OF AUSTIN

CITY OF AUSTIN
WILD HORSE RANCH WWTP EXPANSION
STRUCTURAL
SUBSTATION NO. 1
LOWER PLAN

VERIFY SCALES
BAR IS ONE INCH ON ORIGINAL DRAWING
0 1"
IF NOT ONE INCH ON THIS SHEET, ADJUST SCALES ACCORDINGLY

JOB NO. 10976A.00
DRAWING NO. 85S01
SHEET NO. 388 OF 464

PROJECT NO. 10976A10 FILE NAME: 10976A10855S001.dgn

Plot Date: 11-OCT-2022 7:29:56 AM
User: LDietzel
PlotScale: 1:1
DesignScript: Carollo_Std_Pen_v0905.pen
ColorTable: gshade.ctb
Model: Layout1
LAST SAVED BY: jhill

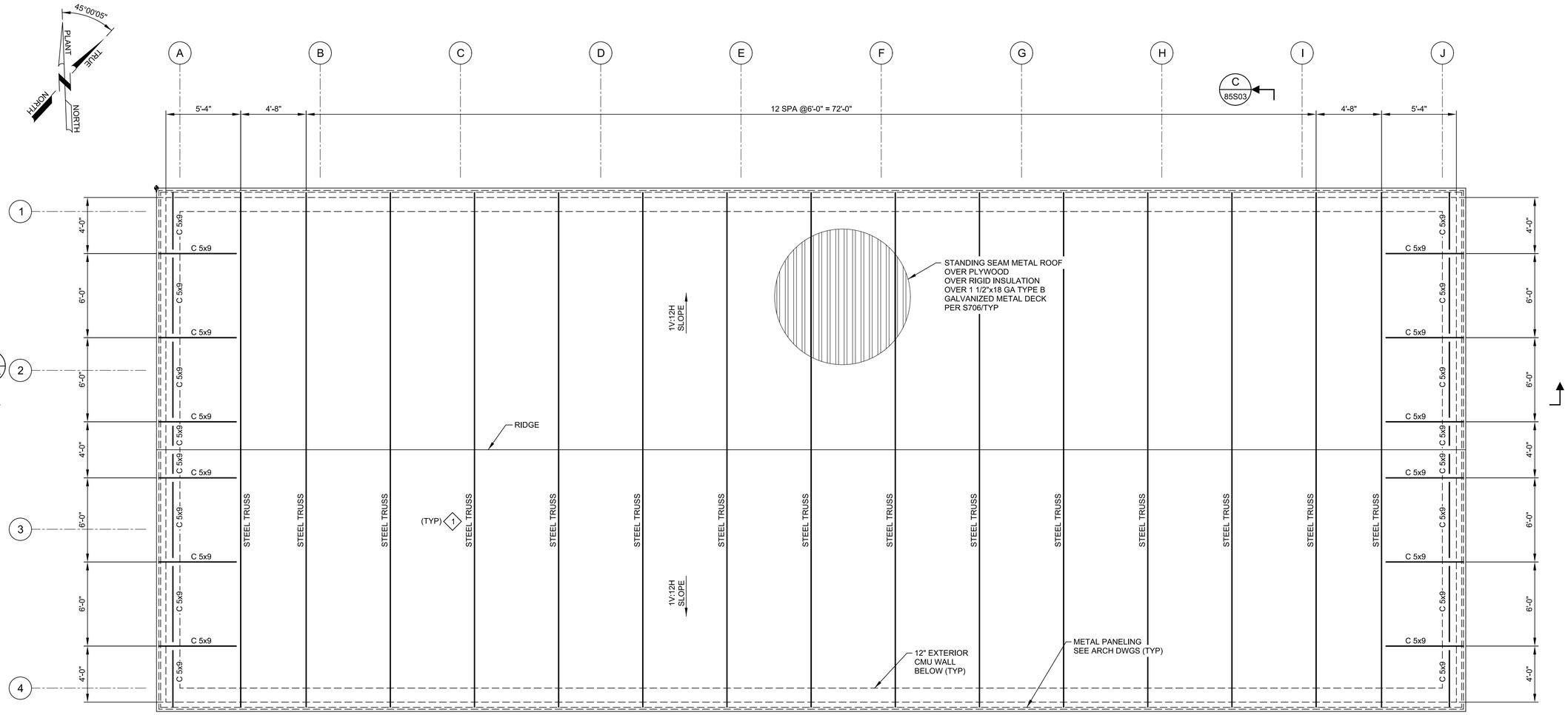

B ROOF PLAN

SCALE: 1/4" = 1'-0"
FILE: 10976A85S102

THIS CONFORMED DOCUMENT IS RELEASED FOR THE CONVENIENCE OF THE CONTRACTOR UNDER THE AUTHORITY OF:

11-01-22
DANNY M HURTADO, P.E. DATE
TX LIC NO. 104266

SEE DISCLAIMER FOR LIMITATIONS OF USE.

CONTRACT DOCUMENTS DATED JUNE 10, 2022, AS PART OF THE BIDDING DOCUMENTS (DRAWINGS AND SPECIFICATIONS) AND SUBSEQUENTLY ISSUED ADDENDA HAVE BEEN MERGED INTO ONE CONFORMING SET OF DOCUMENTS FOR THE CONVENIENCE OF THE CONTRACTOR. IF INCONSISTENCIES OR AMBIGUITIES BETWEEN "CONFORMED" DOCUMENTS AND CONTRACT DOCUMENTS ARE FOUND, THE CONTRACT DOCUMENTS SHALL GOVERN.

GENERAL NOTES:

1. FOR GENERAL STRUCTURAL NOTES, SEE DWG 00GS01.
2. MINIMUM DIAPHRAGM SHEAR = 206 PLF.
3. FOR OPENINGS IN CONCRETE SLABS OR WALLS SEE S180/TYP.
4. VERIFY COORDINATES WITH CIVIL DRAWINGS.

KEY NOTES:

1 PRE-FABRICATED STEEL TRUSSES BY VULCRAFT OR EQUAL (TYP). DESIGNED PER LOADING DIAGRAMS SHOWN ON DRAWING 85S05. SEE SPECIFICATION SECTION 05219 FOR ADDITIONAL DESIGN CRITERIA. TRUSS BRIDGING NOT SHOWN SHALL BE IN ACCORDANCE WITH THE SUPPLIER REQUIREMENTS. PROVIDE STEEL TRUSS REINFORCEMENT AT LOAD POINTS PER S740/TYP.

REV	DATE	BY	DESCRIPTION
			CONFORMED DOCUMENTS

DESIGNED KMD
DRAWN JKK
CHECKED JDS
DATE NOVEMBER 2022

** ORIGINAL SEALED BY KWASI DUOSE 06-10-22 TX PE 100650 **

carollo
TBPELS No. F-882

CITY OF AUSTIN
FOUNDED 1839
CITY OF AUSTIN

CITY OF AUSTIN
WILD HORSE RANCH WWTP EXPANSION
STRUCTURAL
SUBSTATION NO. 1
ROOF PLAN

VERIFY SCALES
BAR IS ONE INCH ON ORIGINAL DRAWING
0 1"
IF NOT ONE INCH ON THIS SHEET, ADJUST SCALES ACCORDINGLY

JOB NO. 10976A.00
DRAWING NO. 85S02
SHEET NO. 389 OF 464

Plot Date: 11-OCT-2022 7:31:41 AM
User: LDietzel
Model: Layout1 ColorTable: gshade.ctb DesignScript: Carollo_Std_Pen_v0905.pen PlotScale: 1:1
LAST SAVED BY: jhill

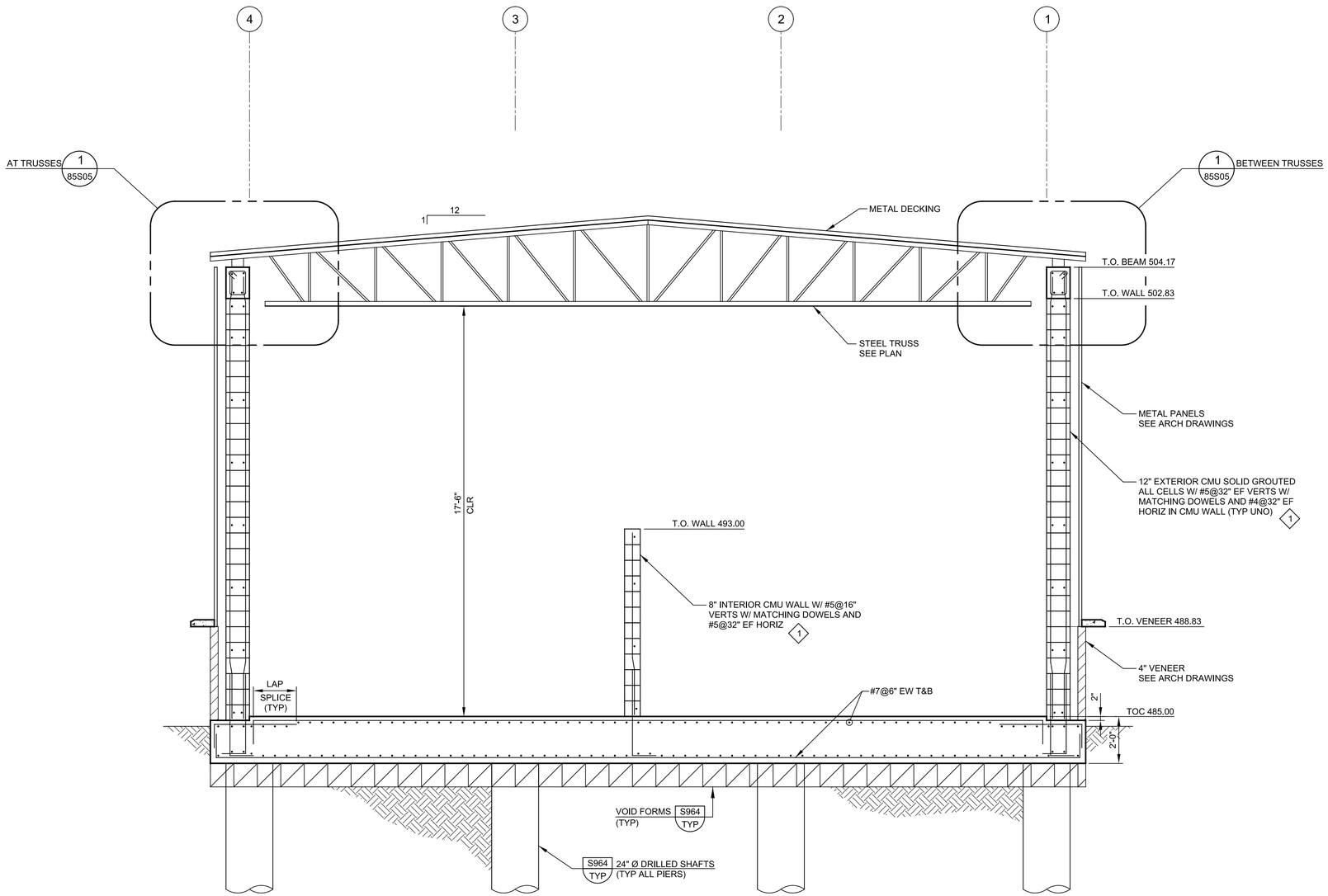

C 85S01 **SECTION**
SCALE: 3/8" = 1'-0"
FILE: 10976A1085S301

GENERAL NOTES:

1. FOR GENERAL STRUCTURAL NOTES, SEE DWG 00GS01.
2. FOR OPENINGS IN CONCRETE SLABS OR WALLS SEE S180/TYP.
3. VERIFY COORDINATES WITH CIVIL DRAWINGS.

KEY NOTES:

1 FOR MASONRY DETAILS, SEE S400/TYP, S410/TYP, S412/TYP, S430/TYP, S433/TYP, S440/TYP, AND S441/TYP.

THIS CONFORMED DOCUMENT IS RELEASED FOR THE CONVENIENCE OF THE CONTRACTOR UNDER THE AUTHORITY OF:

DANNY M HURTADO, P.E. 11-01-22
TX LIC NO. 104266 DATE

SEE DISCLAIMER FOR LIMITATIONS OF USE.

CONTRACT DOCUMENTS DATED JUNE 10, 2022, AS PART OF THE BIDDING DOCUMENTS (DRAWINGS AND SPECIFICATIONS) AND SUBSEQUENTLY ISSUED ADDENDA HAVE BEEN MERGED INTO ONE CONFORMING SET OF DOCUMENTS FOR THE CONVENIENCE OF THE CONTRACTOR. IF INCONSISTENCIES OR AMBIGUITIES BETWEEN "CONFORMED" DOCUMENTS AND CONTRACT DOCUMENTS ARE FOUND, THE CONTRACT DOCUMENTS SHALL GOVERN.

REV	DATE	BY	DESCRIPTION
			CONFORMED DOCUMENTS

DESIGNED KMD
DRAWN JKK
CHECKED JDS
DATE NOVEMBER 2022

** ORIGINAL SEALED BY KWASI DUOSE 06-10-22 TX PE 100650 **

carollo® TBPELS No. F-882

CITY OF AUSTIN

CITY OF AUSTIN
WILD HORSE RANCH WWTP EXPANSION
STRUCTURAL
SUBSTATION NO. 1
SECTIONS AND DETAILS 1

VERIFY SCALES
BAR IS ONE INCH ON ORIGINAL DRAWING
0 1"
IF NOT ONE INCH ON THIS SHEET, ADJUST SCALES ACCORDINGLY

JOB NO. 10976A.00
DRAWING NO. 85S03
SHEET NO. 390 OF 464

Plot Date: 11-OCT-2022 7:33:30 AM
User: LDietzel
PlotScale: 1:1
DesignScript: Carollo_Std_Pen_v0905.pen
ColorTable: gshade.ctb
Model: Layout1
LAST SAVED BY: jhill

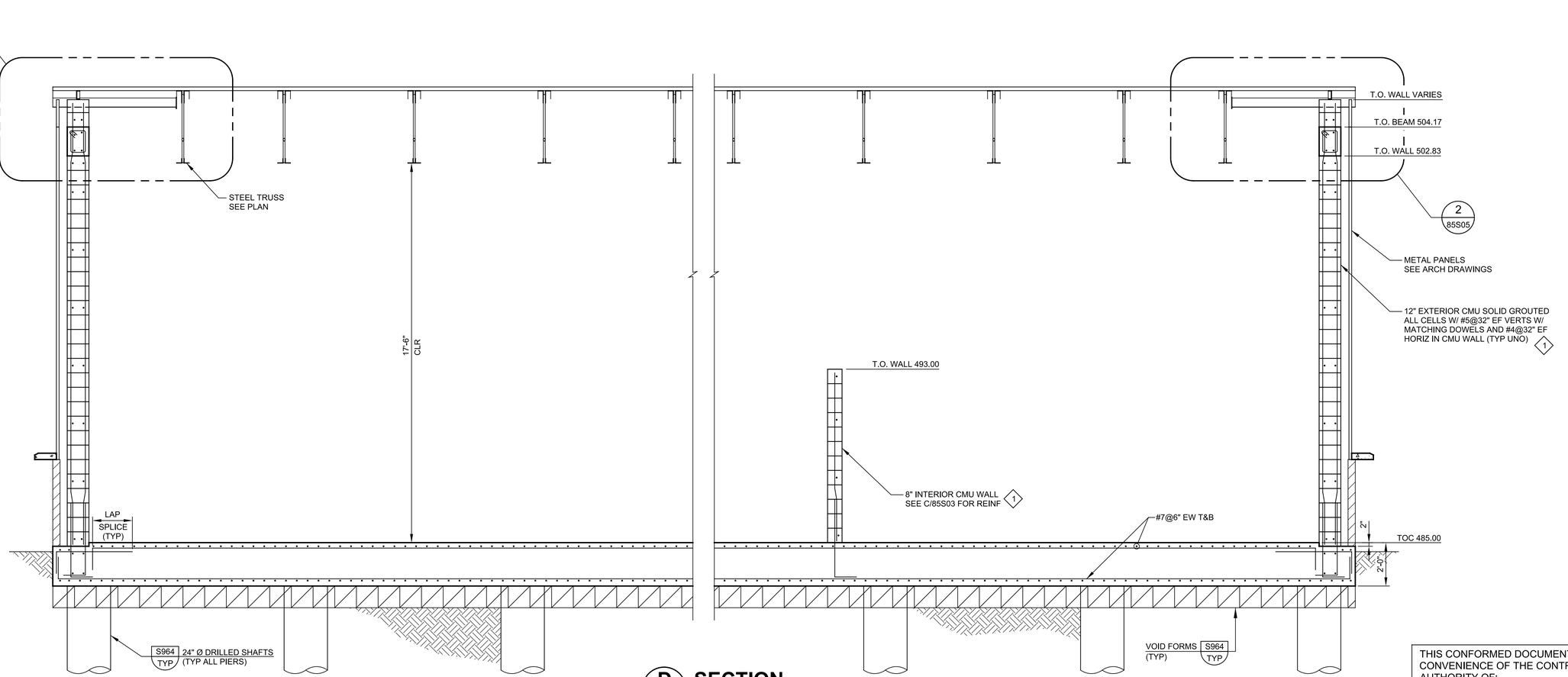

D SECTION
85S01
SCALE: 3/8" = 1'-0"
FILE: 10976A1085S302

GENERAL NOTES:

1. FOR GENERAL STRUCTURAL NOTES, SEE DWG 00GS01.
2. FOR OPENINGS IN CONCRETE SLABS OR WALLS SEE S180/TYP.
3. VERIFY COORDINATES WITH CIVIL DRAWINGS.

KEY NOTES:

1 FOR MASONRY DETAILS, SEE S400/TYP, S410/TYP, S412/TYP, S430/TYP, S433/TYP, S440/TYP, AND S441/TYP.

THIS CONFORMED DOCUMENT IS RELEASED FOR THE CONVENIENCE OF THE CONTRACTOR UNDER THE AUTHORITY OF:

11-01-22

DANNY M HURTADO, P.E. DATE
TX LIC NO. 104266

SEE DISCLAIMER FOR LIMITATIONS OF USE.

CONTRACT DOCUMENTS DATED JUNE 10, 2022, AS PART OF THE BIDDING DOCUMENTS (DRAWINGS AND SPECIFICATIONS) AND SUBSEQUENTLY ISSUED ADDENDA HAVE BEEN MERGED INTO ONE CONFORMING SET OF DOCUMENTS FOR THE CONVENIENCE OF THE CONTRACTOR. IF INCONSISTENCIES OR AMBIGUITIES BETWEEN "CONFORMED" DOCUMENTS AND CONTRACT DOCUMENTS ARE FOUND, THE CONTRACT DOCUMENTS SHALL GOVERN.

REV	DATE	BY	DESCRIPTION
			CONFORMED DOCUMENTS

DESIGNED KMD
DRAWN ERR
CHECKED JDS
DATE NOVEMBER 2022

** ORIGINAL SEALED BY KWASI DUOSE 06-10-22 TX PE 100650 **

carollo®
TBPELS No. F-882

CITY OF AUSTIN
FOUNDED 1839

CITY OF AUSTIN

CITY OF AUSTIN
WILD HORSE RANCH WWTP EXPANSION
STRUCTURAL
SUBSTATION NO. 1
SECTIONS AND DETAILS 2

VERIFY SCALES
BAR IS ONE INCH ON ORIGINAL DRAWING
0 1"
IF NOT ONE INCH ON THIS SHEET, ADJUST SCALES ACCORDINGLY

JOB NO. 10976A.00
DRAWING NO. 85S04
SHEET NO. 391 OF 464

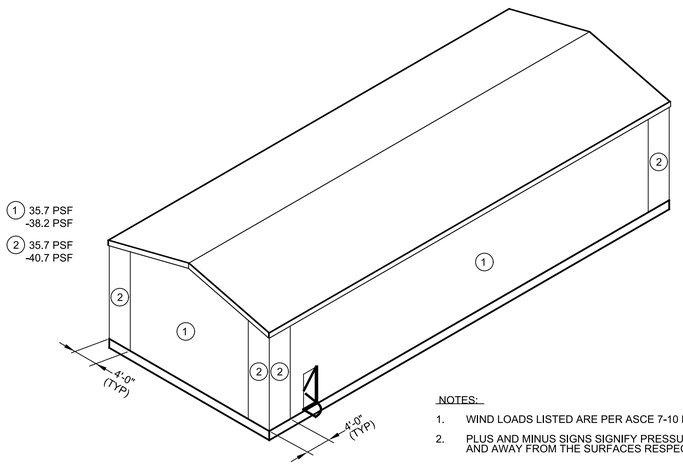

NOTES:

1. WIND LOADS LISTED ARE PER ASCE 7-10 FACTORED BY 1.6.
2. PLUS AND MINUS SIGNS SIGNIFY PRESSURES ACTING TOWARD AND AWAY FROM THE SURFACES RESPECTIVELY.

FIGURE 1 - WIND LOAD DIAGRAM
(COMPONENTS AND CLADDING)

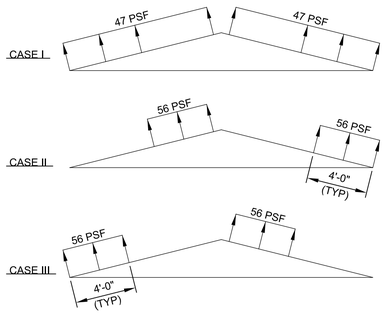

NET UPLIFT DIAGRAMS
(FOR STEEL TRUSS DESIGN)

DEFLECTION CRITERIA FOR TRUSSES:

DEFLECTION

$\triangle = \frac{L}{240}$ FOR TOTAL LOAD

NOTES:

1. P LOAD AT ANY POINT ALONG BOTTOM CHORD OF TRUSS = 500LB DEAD LOAD.
2. ALL WIND LOADS ARE FACTORED PER ASCE 7-10 BY 1.6.
3. ALL DEAD AND LIVE LOADS SHOWN ARE UNFACTORED.
4. DO NOT COMBINE P LOADS WITH WIND UPLIFT CASE.
5. TOP CHORD OF TRUSS SHALL BE DESIGNED FOR TENSION AND FOR COMPRESSION WIND LOAD OF 2340# (FACTORED BY 1.6).

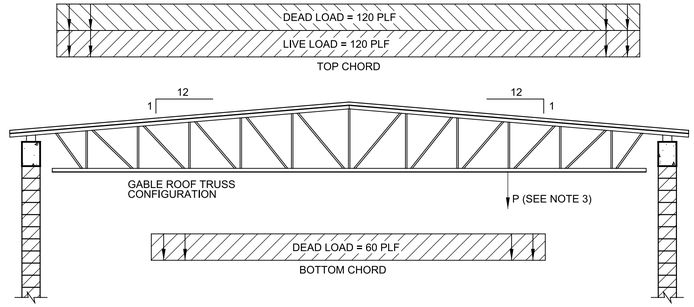

FIGURE 1 - WIND LOAD DIAGRAM

GENERAL NOTES:

1. FOR GENERAL STRUCTURAL NOTES, SEE DWG 00GS01.
2. FOR OPENINGS IN CONCRETE SLABS OR WALLS SEE S180/TYP.
3. VERIFY COORDINATES WITH CIVIL DRAWINGS.

THIS CONFORMED DOCUMENT IS RELEASED FOR THE CONVENIENCE OF THE CONTRACTOR UNDER THE AUTHORITY OF:

11-01-22

DANNY M HURTADO, P.E. DATE
TX LIC NO. 104266

SEE DISCLAIMER FOR LIMITATIONS OF USE.

CONTRACT DOCUMENTS DATED JUNE 10, 2022, AS PART OF THE BIDDING DOCUMENTS (DRAWINGS AND SPECIFICATIONS) AND SUBSEQUENTLY ISSUED ADDENDA HAVE BEEN MERGED INTO ONE CONFORMING SET OF DOCUMENTS FOR THE CONVENIENCE OF THE CONTRACTOR. IF INCONSISTENCIES OR AMBIGUITIES BETWEEN "CONFORMED" DOCUMENTS AND CONTRACT DOCUMENTS ARE FOUND, THE CONTRACT DOCUMENTS SHALL GOVERN.

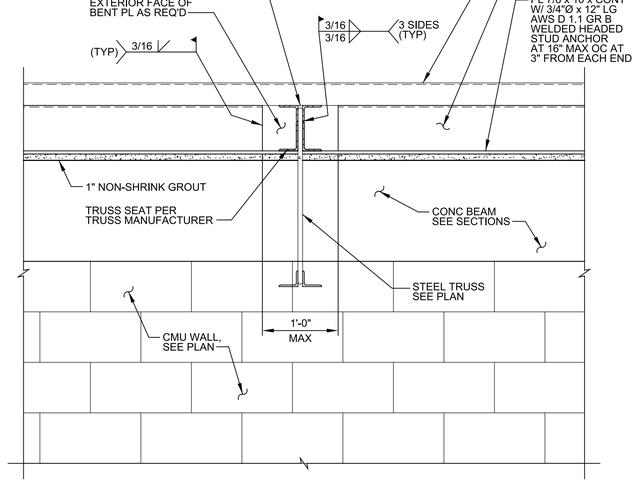

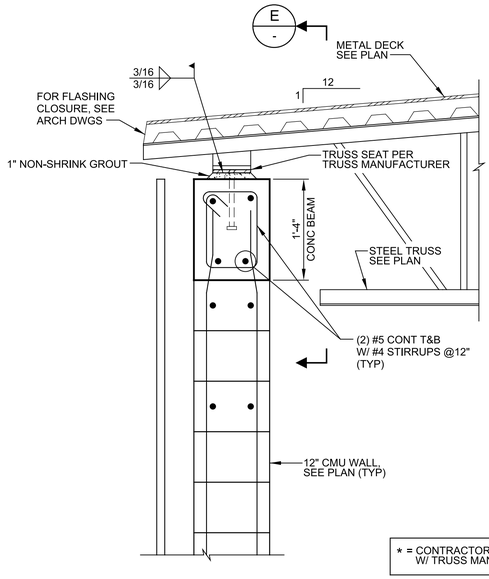

AT TRUSSES

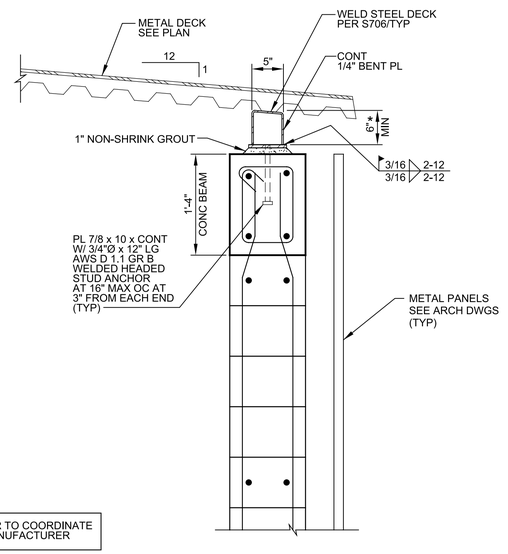

BETWEEN TRUSSES

* = CONTRACTOR TO COORDINATE W/ TRUSS MANUFACTURER

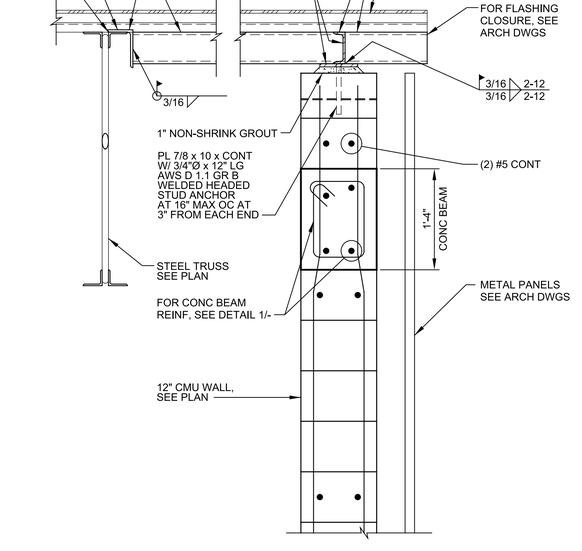

E / - **SECTION**
SCALE: 1" = 1'-0"
FILE: 10976A1085S304

1 / 85S03 **DETAIL**
SCALE: 1" = 1'-0"
FILE: 10976A1085S304

2 / 85S04 **DETAIL**
SCALE: 1" = 1'-0"
FILE: 10976A1085S304

REV	DATE	BY	DESCRIPTION
			CONFORMED DOCUMENTS

DESIGNED KMD
DRAWN ERR
CHECKED JDS
DATE NOVEMBER 2022

**
ORIGINAL
SEALED BY
KWASI DUOSE
06-10-22
TX PE 100650
**

carollo®
TBPELS No. F-882

CITY OF AUSTIN
FOUNDED 1839

CITY OF AUSTIN

CITY OF AUSTIN
WILD HORSE RANCH WWTP EXPANSION
STRUCTURAL
SUBSTATION NO. 1
SECTIONS AND DETAILS 3

VERIFY SCALES
BAR IS ONE INCH ON ORIGINAL DRAWING
0 1"
IF NOT ONE INCH ON THIS SHEET, ADJUST SCALES ACCORDINGLY

JOB NO. 10976A.00
DRAWING NO. 85S05
SHEET NO. 392 OF 464

PROJECT NO. 10976A10 FILE NAME: 10976A1085S005.dgn

Plot Date: 11-OCT-2022 7:35:23 AM
User: LDietzel
PlotScale: 1:1
DesignScript: Carollo_Std_Pen_v0905.pen
ColorTable: gshade.ctb
Model: Layout1
LAST SAVED BY: jhill

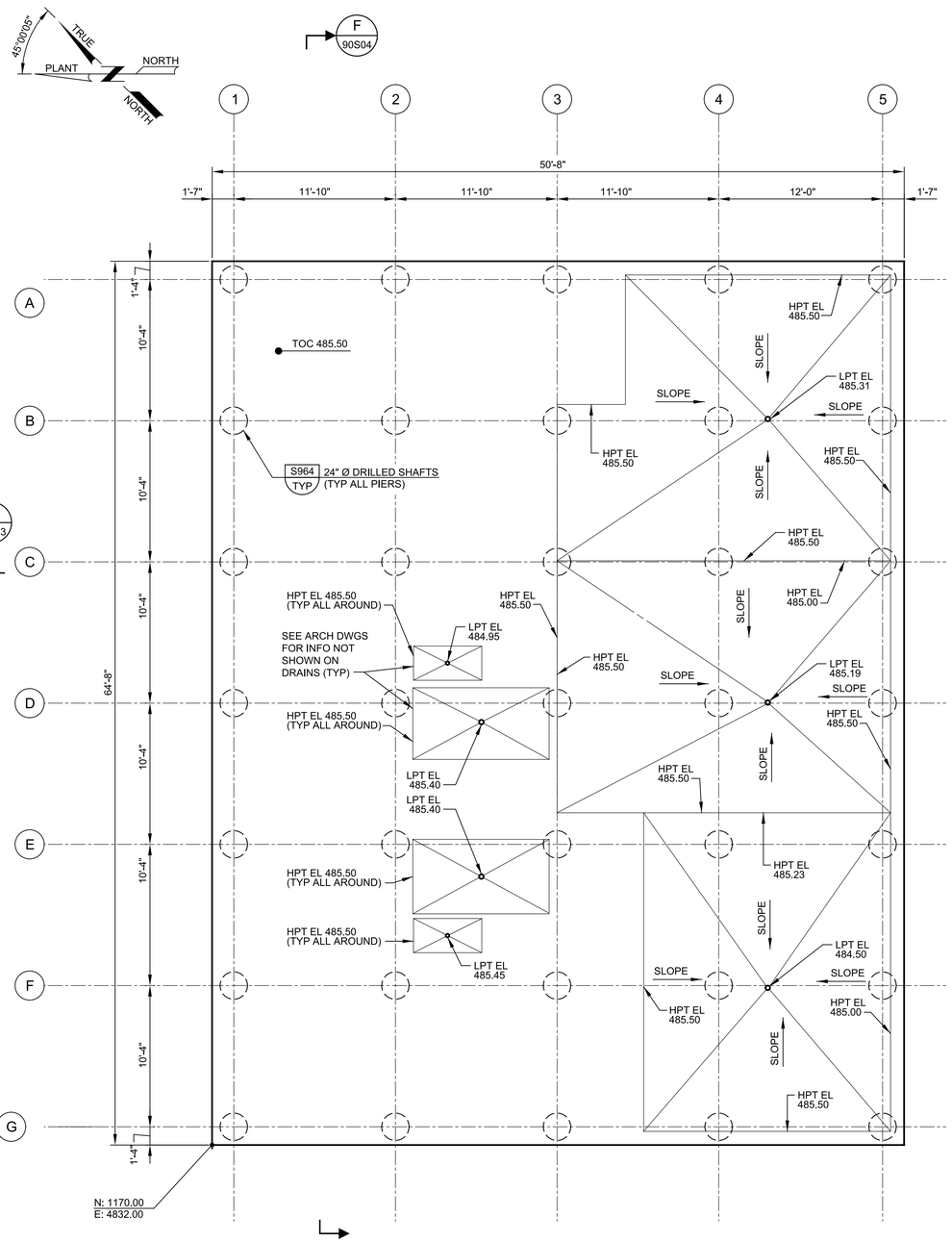

A PIER PLAN

SCALE: 3/16" = 1'-0"
FILE: 10976A1090S101

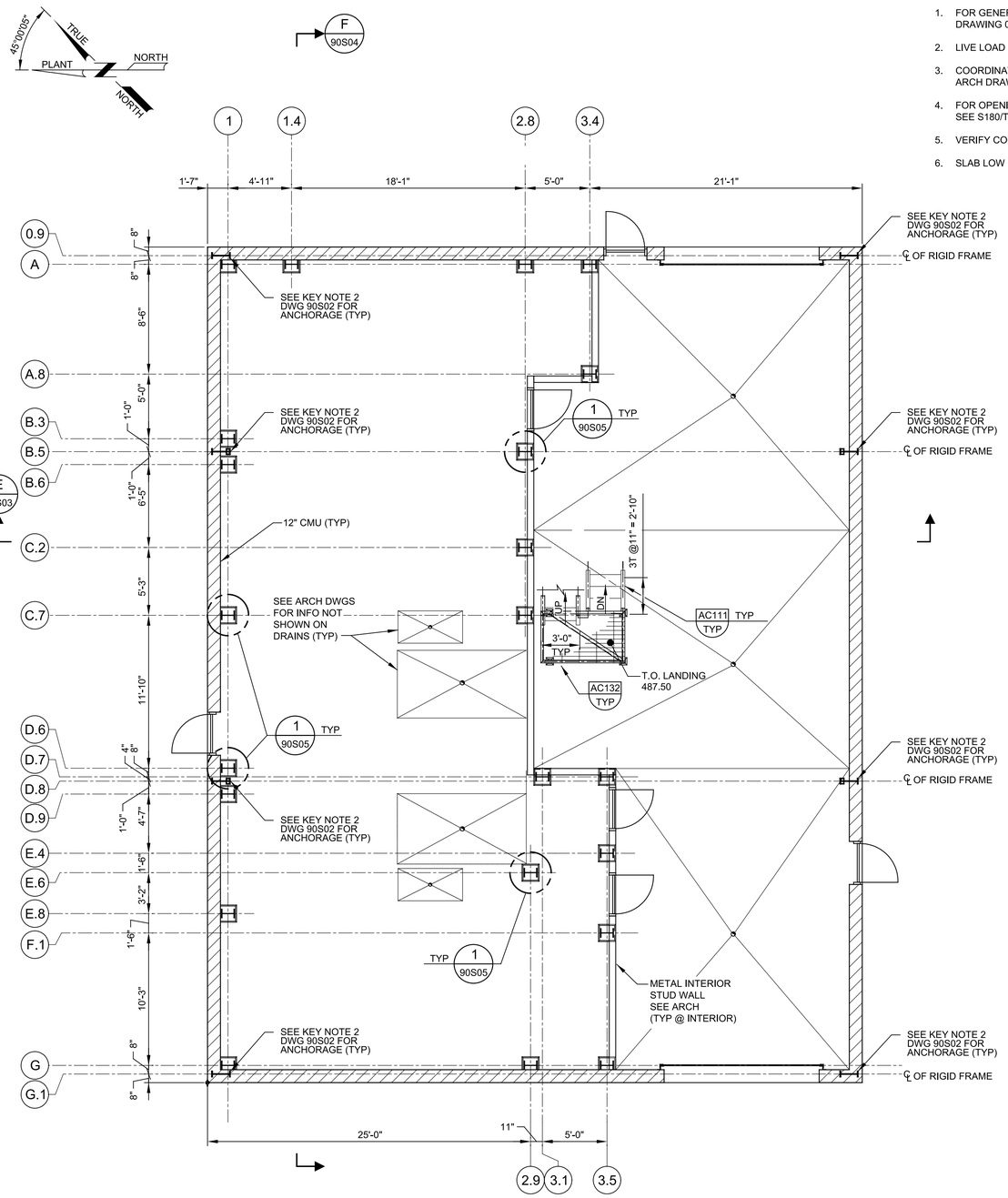

B FOUNDATION PLAN

SCALE: 3/16" = 1'-0"
FILE: 10976A1090S102

GENERAL NOTES:

1. FOR GENERAL STRUCTURAL NOTES SEE DRAWING 00GS01.
2. LIVE LOAD = H-20 TRUCK.
3. COORDINATE ALL OPENINGS IN CMU WALL WITH ARCH DRAWINGS.
4. FOR OPENINGS IN CONCRETE SLABS OR WALLS SEE S180/TYP.
5. VERIFY COORDINATES WITH CIVIL DRAWINGS.
6. SLAB LOW POINT = 1/4"/FT

CONTRACT DOCUMENTS DATED JUNE 10, 2022, AS PART OF THE BIDDING DOCUMENTS (DRAWINGS AND SPECIFICATIONS) AND SUBSEQUENTLY ISSUED ADDENDA HAVE BEEN MERGED INTO ONE CONFORMING SET OF DOCUMENTS FOR THE CONVENIENCE OF THE CONTRACTOR. IF INCONSISTENCIES OR AMBIGUITIES BETWEEN "CONFORMED" DOCUMENTS AND CONTRACT DOCUMENTS ARE FOUND, THE CONTRACT DOCUMENTS SHALL GOVERN.

THIS CONFORMED DOCUMENT IS RELEASED FOR THE CONVENIENCE OF THE CONTRACTOR UNDER THE AUTHORITY OF:

DANNY M HURTADO, P.E.
TX LIC NO. 104266

11-01-22
DATE

SEE DISCLAIMER FOR LIMITATIONS OF USE.

REV	DATE	BY	DESCRIPTION
			CONFORMED DOCUMENTS

DESIGNED KMD
DRAWN TJD
CHECKED JDS
DATE NOVEMBER 2022

** ORIGINAL SEALED BY KWASI DUOSE 06-10-22 TX PE 100650 **

carollo® TBPELS No. F-882

CITY OF AUSTIN FOUNDED 1839

CITY OF AUSTIN

CITY OF AUSTIN
WILD HORSE RANCH WWTP EXPANSION
STRUCTURAL
ADMINISTRATION BUILDING
PLANS 1

VERIFY SCALES
BAR IS ONE INCH ON ORIGINAL DRAWING
0 1"
IF NOT ONE INCH ON THIS SHEET, ADJUST SCALES ACCORDINGLY

JOB NO. 10976A.00
DRAWING NO. 90S01
SHEET NO. 393 OF 464

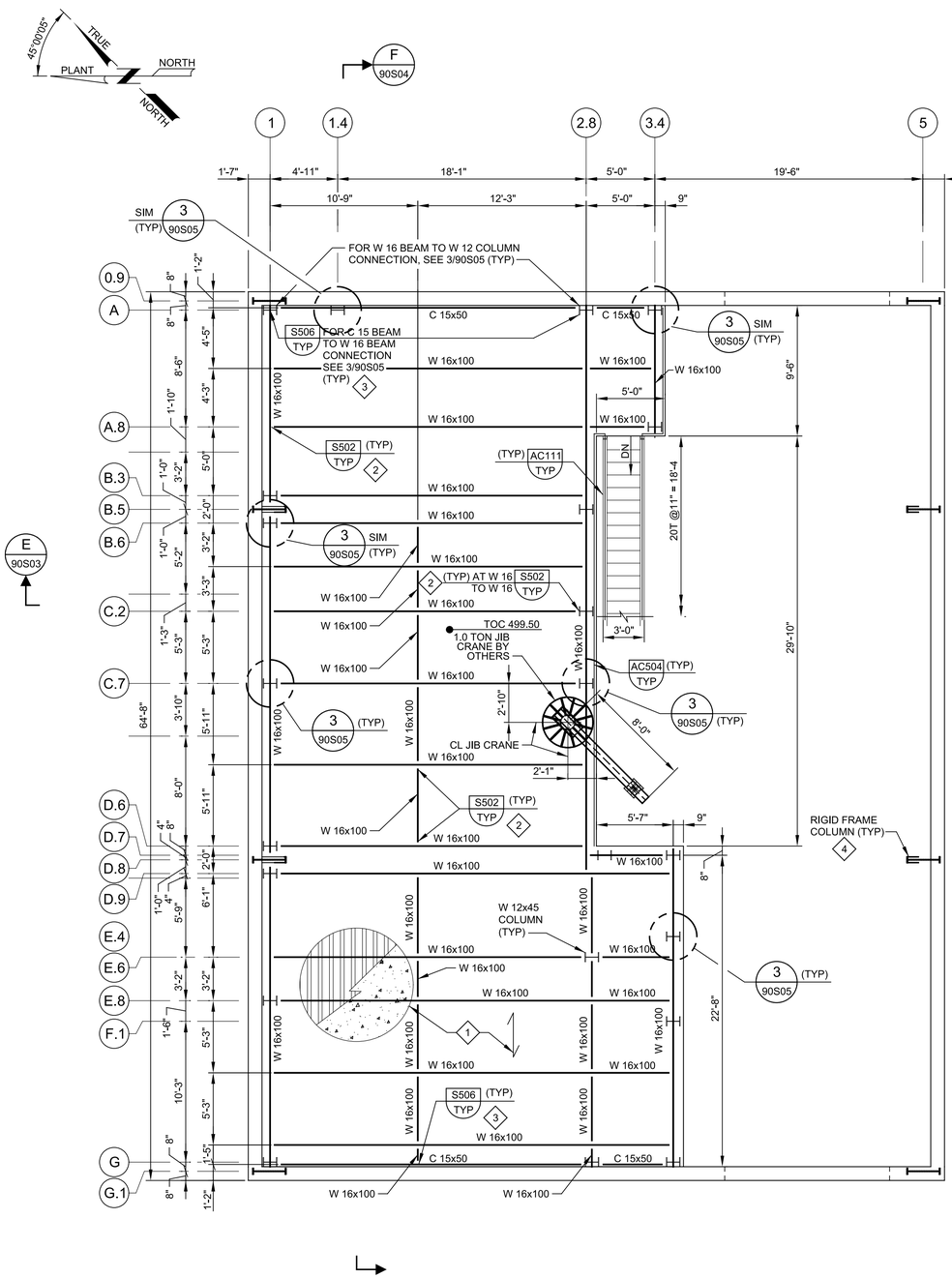

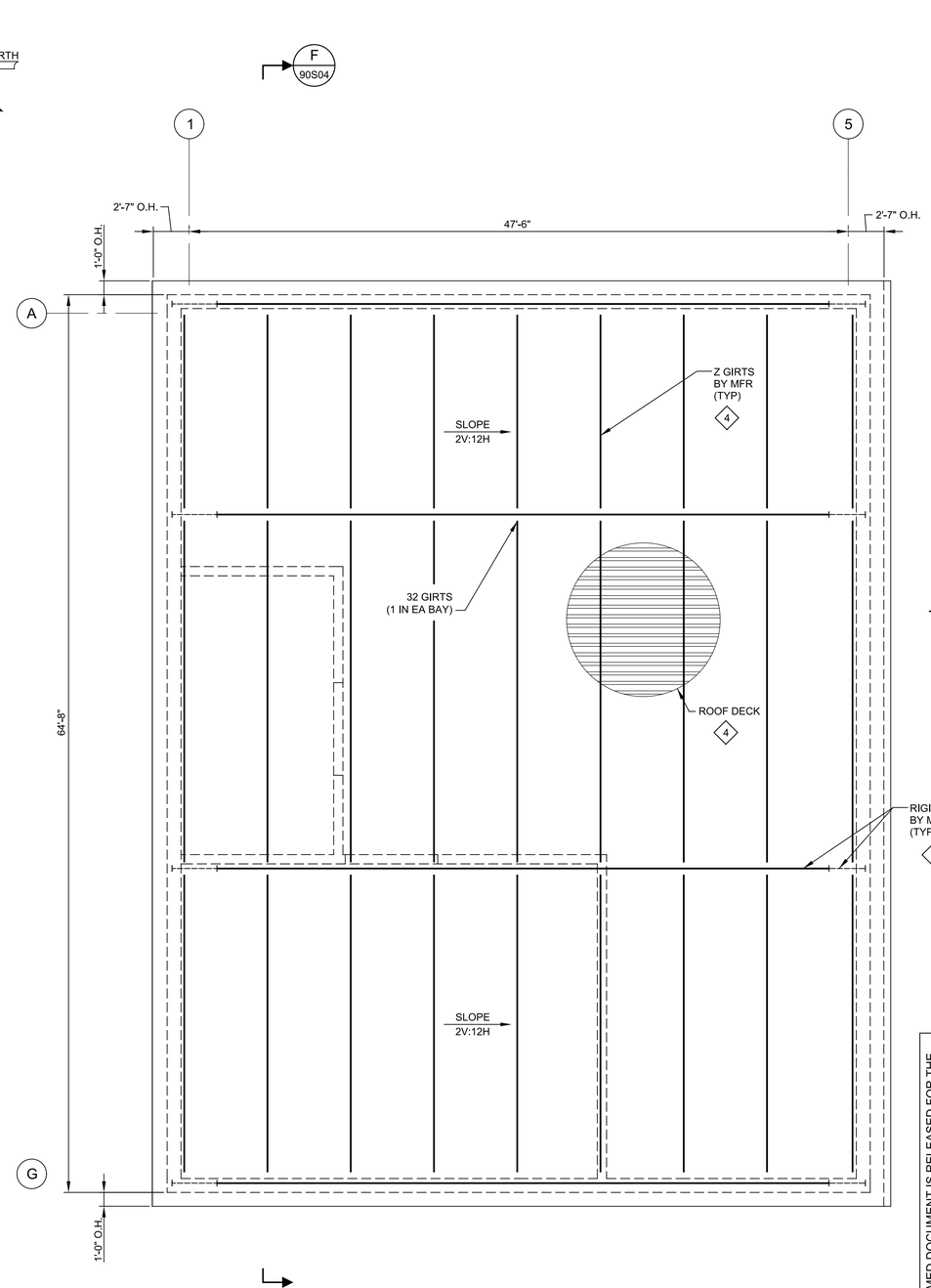

GENERAL NOTES:

1. FOR GENERAL STRUCTURAL NOTES SEE DRAWING 00GS01.
2. MEZZANINE LIVE LOAD = 300 PSF.
3. FOR OPENINGS IN CONCRETE SLABS OR WALLS SEE S180/TYP.
4. VERIFY COORDINATES WITH CIVIL DRAWINGS.

KEY NOTES:

1. VULCRAFT 20GA 3VLI-36 GRADE 50 COMPOSITE STEEL DECK-SLAB W/ 8" TOTAL SLAB DEPTH, F'c = 4000 PSI, 145 PCF NWC (NORMAL WEIGHT CONCRETE). SEE DETAIL 2/90S05. CONTRACTOR SHALL SUBMIT PROPOSED MIX FOR ENGINEERS REVIEW AND APPROVAL PRIOR TO CONSTRUCTION. PROPOSED MIX SHALL FOLLOW GENERAL GUIDELINES OF THE SPECIFICATIONS.
2. PROVIDE 4 ROW OF BOLTS PER LEG WITH (2) L 4x3 1/2x5/16 AND S502/TYP. BOLTS SHALL BE ASTM F3125 GRADES A325, GROUP A, STANDARD HOLES PER AISC.
3. PROVIDE 3/8" PL WITH S506/TYP.
4. CONTRACTOR SHALL SUBMIT CALCULATIONS AND DRAWINGS FOR THE PROPOSED RIGID FRAME PREFABRICATED BUILDING. THE PROPOSED BUILDING SHALL CONSIST OF GALVANIZED MEMBERS. THE BUILDING SHALL BE DESIGNED IN ACCORDANCE WITH THE WIND AND SEISMIC REQUIREMENTS SPECIFIED IN THE CONRTACT DRAWINGS AND SPECIFICATIONS, THE STRUCTURAL DESIGN CRITERIA NOTED ON DRAWING 00GS01, ROOF DEAD LOAD = 20 PSF MIN, ROOF LIVE LOAD = 20PSF MIN. ALL ANCHORAGE AND CONNECTIONS SHALL ALSO CONFORM TO ACI 318 APENDIX D. ALL CALCULATIONS AND DRAWINGS SHALL BE SEALED AND SIGNED BY A REGISTERED PROFESSIONAL ENGINEER IN THE STATE OF TEXAS AND SUBMITTED FOR THE ENGINEERS REVIEW PRIOR TO CONSTRUCTION.

ESTIMATED COLUMN REACTION LOADS (MAX UNFACTORED)		
AXIAL ↓	UPLIFT ↑	SHEAR (←→) (←→)
16.7 k	45.7 k	25.3 k

C MEZZANINE FRAMING PLAN

SCALE: 3/16" = 1'-0"
FILE: 10976A1090S103

D ROOF FRAMING PLAN

SCALE: 3/16" = 1'-0"
FILE: 10976A1090S104

THIS CONFORMED DOCUMENT IS RELEASED FOR THE CONVENIENCE OF THE CONTRACTOR UNDER THE AUTHORITY OF:

DANNY M HURTADO, P.E.
TX LIC NO. 104266

11-01-22
DATE

SEE DISCLAIMER FOR LIMITATIONS OF USE.

CONTRACT DOCUMENTS DATED JUNE 10, 2022, AS PART OF THE BIDDING DOCUMENTS (DRAWINGS AND SPECIFICATIONS) AND SUBSEQUENTLY ISSUED ADDENDA HAVE BEEN MERGED INTO ONE CONFORMING SET OF DOCUMENTS FOR THE CONVENIENCE OF THE CONTRACTOR. IF INCONSISTENCIES OR AMBIGUITIES BETWEEN "CONFORMED" DOCUMENTS AND CONTRACT DOCUMENTS ARE FOUND, THE CONTRACT DOCUMENTS SHALL GOVERN.

REV	DATE	BY	DESCRIPTION
			CONFORMED DOCUMENTS

DESIGNED KMD
DRAWN TJD
CHECKED JDS
DATE NOVEMBER 2022

** ORIGINAL SEALED BY KWASI DUOSE 06-10-22 TX PE 100650 **

carollo®
TBPELS No. F-882

CITY OF AUSTIN
FOUNDED 1839
CITY OF AUSTIN

CITY OF AUSTIN
WILD HORSE RANCH WWTP EXPANSION
STRUCTURAL
ADMINISTRATION BUILDING
PLANS 2

VERIFY SCALES
BAR IS ONE INCH ON ORIGINAL DRAWING
0 1"
IF NOT ONE INCH ON THIS SHEET, ADJUST SCALES ACCORDINGLY

JOB NO. 10976A.00
DRAWING NO. 90S02
SHEET NO. 394 OF 464

PROJECT NO. 10976A10 FILE NAME: 10976A1090S002.dgn

LAST SAVED BY: denriquez Model: Layout1 ColorTable: gshade.ctb DesignScript: Carollo_Std_Pen_v0905.pen PlotScale: 1:1 User: LDietzel Plot Date: 11-OCT-2022 7:40:18 AM

Plot Date: 11-OCT-2022 7:42:10 AM
User: LDietzel
PlotScale: 1:1
DesignScript: Carollo_Std_Pen_v0905.pen
ColorTable: gshade.ctb
Model: Layout1
LAST SAVED BY: denriquez

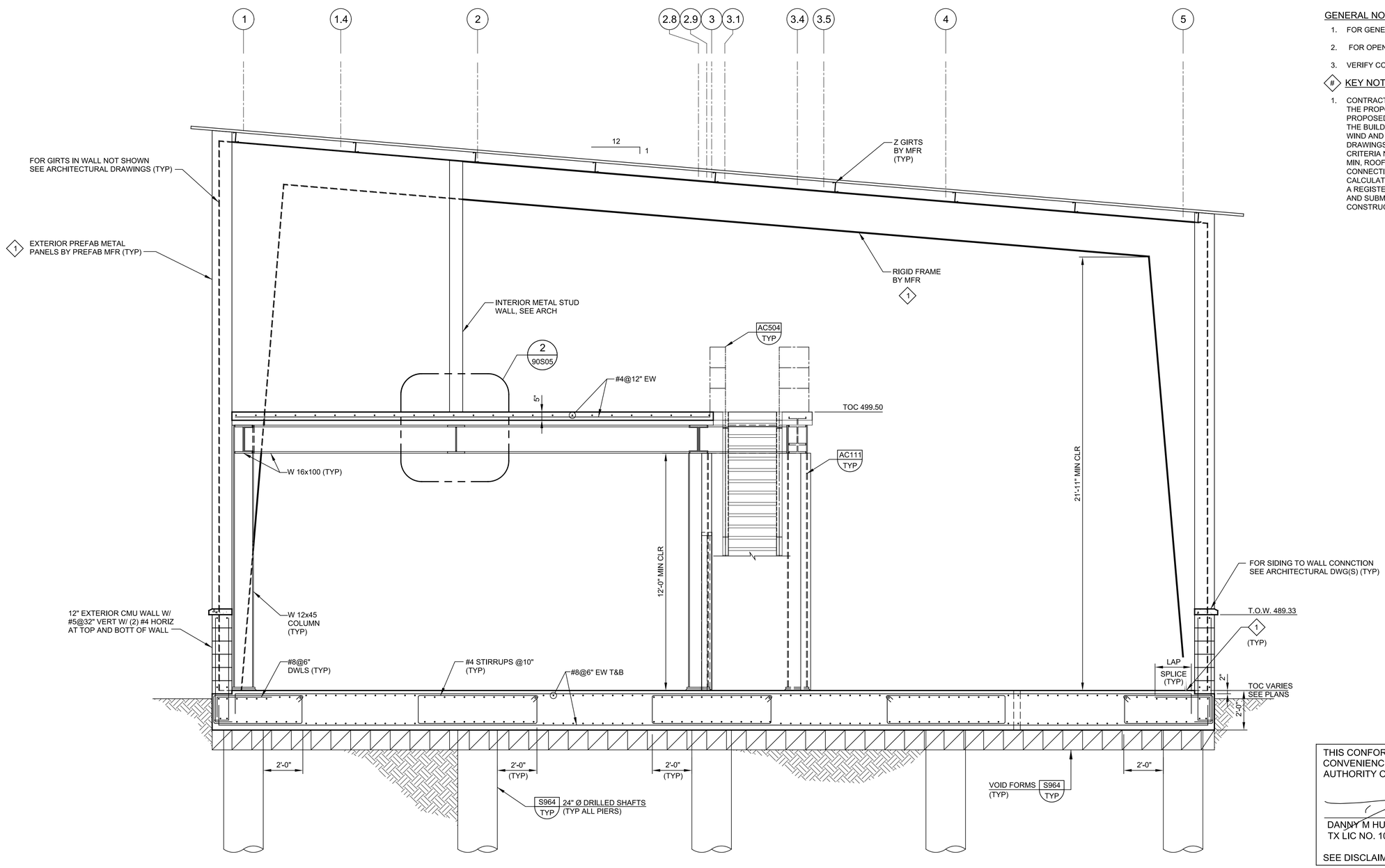

GENERAL NOTES:

1. FOR GENERAL STRUCTURAL NOTES SEE DRAWING 00GS01.
2. FOR OPENINGS IN CONCRETE SLABS OR WALLS SEE S180/TYP.
3. VERIFY COORDINATES WITH CIVIL DRAWINGS.

KEY NOTES:

1. CONTRACTOR SHALL SUBMIT CALCULATIONS AND DRAWINGS FOR THE PROPOSED RIGID FRAME PREFABRICATED BUILDING. THE PROPOSED BUILDING SHALL CONSIST OF GALVANIZED MEMBERS. THE BUILDING SHALL BE DESIGNED IN ACCORDANCE WITH THE WIND AND SEISMIC REQUIREMENTS SPECIFIED IN THE CONRTACT DRAWINGS AND SPECIFICATIONS. THE STRUCTURAL DESIGN CRITERIA NOTED ON DRAWING 00GS01, ROOF DEAD LOAD = 20 PSF MIN, ROOF LIVE LOAD = 20PSF MIN. ALL ANCHORAGE AND CONNECTIONS SHALL ALSO CONFORM TO ACI 318 APENDIX D. ALL CALCULATIONS AND DRAWINGS SHALL BE SEALED AND SIGNED BY A REGISTERED PROFESSIONAL ENGINEER IN THE STATE OF TEXAS AND SUBMITTED FOR THE ENGINEERS REVIEW PRIOR TO CONSTRUCTION.

E / 90S01 SECTION
SCALE: 3/8" = 1'-0"
FILE: 70976A1090S301

THIS CONFORMED DOCUMENT IS RELEASED FOR THE CONVENIENCE OF THE CONTRACTOR UNDER THE AUTHORITY OF:

DANNY M HURTADO, P.E.
TX LIC NO. 104266
11-01-22
DATE

SEE DISCLAIMER FOR LIMITATIONS OF USE.

CONTRACT DOCUMENTS DATED JUNE 10, 2022, AS PART OF THE BIDDING DOCUMENTS (DRAWINGS AND SPECIFICATIONS) AND SUBSEQUENTLY ISSUED ADDENDA HAVE BEEN MERGED INTO ONE CONFORMING SET OF DOCUMENTS FOR THE CONVENIENCE OF THE CONTRACTOR. IF INCONSISTENCIES OR AMBIGUITIES BETWEEN "CONFORMED" DOCUMENTS AND CONTRACT DOCUMENTS ARE FOUND, THE CONTRACT DOCUMENTS SHALL GOVERN.

REV	DATE	BY	DESCRIPTION
			CONFORMED DOCUMENTS

DESIGNED KMD
DRAWN TJD
CHECKED JDS
DATE NOVEMBER 2022

** ORIGINAL SEALED BY KWASI DUOSE 06-10-22 TX PE 100650 **

carollo®
TBPELS No. F-882

CITY OF AUSTIN
FOUNDED 1839
CITY OF AUSTIN

CITY OF AUSTIN
WILD HORSE RANCH WWTP EXPANSION
STRUCTURAL
ADMINISTRATION BUILDING
SECTIONS AND DETAILS 1

VERIFY SCALES
BAR IS ONE INCH ON ORIGINAL DRAWING
0 1"
IF NOT ONE INCH ON THIS SHEET, ADJUST SCALES ACCORDINGLY

JOB NO. 10976A.00
DRAWING NO. 90S03
SHEET NO. 395 OF 464

PROJECT NO. 10976A10 FILE NAME: 10976A1090S003.dgn

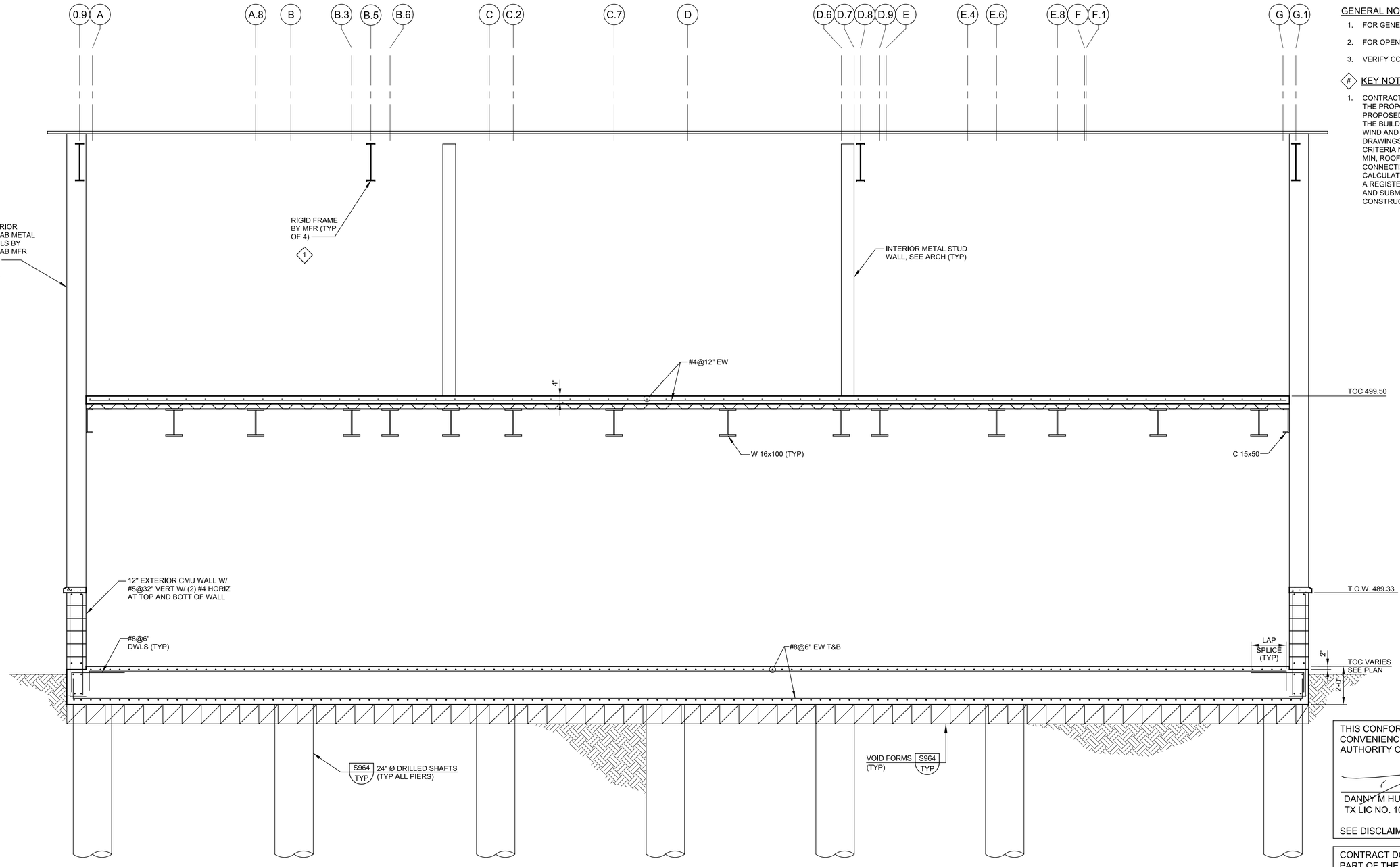

F SECTION
90S01
SCALE: 3/8" = 1'-0"
FILE: 70976A1090S302

GENERAL NOTES:

1. FOR GENERAL STRUCTURAL NOTES SEE DRAWING 00GS01.
2. FOR OPENINGS IN CONCRETE SLABS OR WALLS SEE S180/TYP.
3. VERIFY COORDINATES WITH CIVIL DRAWINGS.

KEY NOTES:

1. CONTRACTOR SHALL SUBMIT CALCULATIONS AND DRAWINGS FOR THE PROPOSED RIGID FRAME PREFABRICATED BUILDING. THE PROPOSED BUILDING SHALL CONSIST OF GALVANIZED MEMBERS. THE BUILDING SHALL BE DESIGNED IN ACCORDANCE WITH THE WIND AND SEISMIC REQUIREMENTS SPECIFIED IN THE CONRTACT DRAWINGS AND SPECIFICATIONS, THE STRUCTURAL DESIGN CRITERIA NOTED ON DRAWING 00GS01, ROOF DEAD LOAD = 20 PSF MIN, ROOF LIVE LOAD = 20 PSF MIN. ALL ANCHORAGE AND CONNECTIONS SHALL ALSO CONFORM TO ACI 318 APENDIX D. ALL CALCULATIONS AND DRAWINGS SHALL BE SEALED AND SIGNED BY A REGISTERED PROFESSIONAL ENGINEER IN THE STATE OF TEXAS AND SUBMITTED FOR THE ENGINEERS REVIEW PRIOR TO CONSTRUCTION.

THIS CONFORMED DOCUMENT IS RELEASED FOR THE CONVENIENCE OF THE CONTRACTOR UNDER THE AUTHORITY OF:

DANNY M HURTADO, P.E.
TX LIC NO. 104266

11-01-22
DATE

SEE DISCLAIMER FOR LIMITATIONS OF USE.

CONTRACT DOCUMENTS DATED JUNE 10, 2022, AS PART OF THE BIDDING DOCUMENTS (DRAWINGS AND SPECIFICATIONS) AND SUBSEQUENTLY ISSUED ADDENDA HAVE BEEN MERGED INTO ONE CONFORMING SET OF DOCUMENTS FOR THE CONVENIENCE OF THE CONTRACTOR. IF INCONSISTENCIES OR AMBIGUITIES BETWEEN "CONFORMED" DOCUMENTS AND CONTRACT DOCUMENTS ARE FOUND, THE CONTRACT DOCUMENTS SHALL GOVERN.

REV	DATE	BY	DESCRIPTION
			CONFORMED DOCUMENTS

DESIGNED KMD
DRAWN ERR
CHECKED JDS
DATE NOVEMBER 2022

** ORIGINAL SEALED BY KWASI DUOSE 06-10-22 TX PE 100650 **

carollo®
TBPELS No. F-882

CITY OF AUSTIN
FOUNDED 1839
CITY OF AUSTIN

CITY OF AUSTIN
WILD HORSE RANCH WWTP EXPANSION
STRUCTURAL
ADMINISTRATION BUILDING SECTIONS AND DETAILS 2

VERIFY SCALES
BAR IS ONE INCH ON ORIGINAL DRAWING
0 1"
IF NOT ONE INCH ON THIS SHEET, ADJUST SCALES ACCORDINGLY

JOB NO. 10976A.00
DRAWING NO. 90S04
SHEET NO. 396 OF 464

PROJECT NO. 10976A10 FILE NAME: 10976A1090S004.dgn

Plot Date: 11-OCT-2022 7:44:33 AM
User: LDietzel
PlotScale: 1:1
DesignScript: Carollo_Std_Pen_v0905.pen
ColorTable: gshade.ctb
Model: Layout1
LAST SAVED BY: denriquez

Plot Date: 11-OCT-2022 7:46:25 AM

LAST SAVED BY: denriquez

GENERAL NOTES:

1. FOR GENERAL STRUCTURAL NOTES SEE DRAWING 00GS01.
2. FOR OPENINGS IN CONCRETE SLABS OR WALLS SEE S180/TYP.
3. VERIFY COORDINATES WITH CIVIL DRAWINGS.

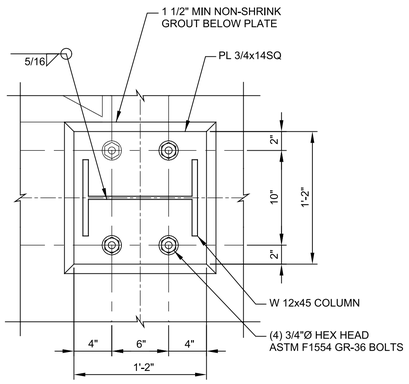

BASE PLATE DETAIL

1 DETAIL
90S01 SCALE: 1 1/2" = 1'-0"
FILE: 10976A1090S102

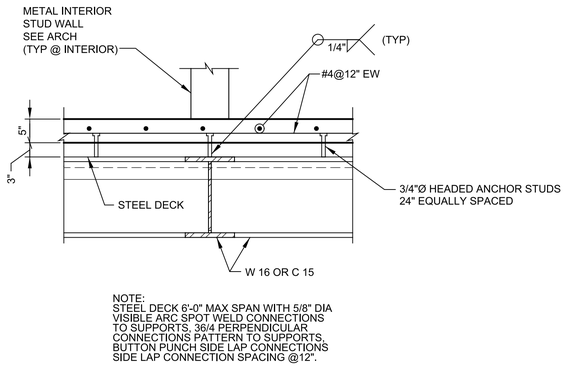

NOTE:
STEEL DECK 6'-0" MAX SPAN WITH 5/8" DIA VISIBLE ARC SPOT WELD CONNECTIONS TO SUPPORTS, 36/4 PERPENDICULAR CONNECTIONS PATTERN TO SUPPORTS, BUTTON PUNCH SIDE LAP CONNECTIONS SIDE LAP CONNECTION SPACING @12".

2 DETAIL
90S03 SCALE: 3/4" = 1'-0"
FILE: 10976A1090S301

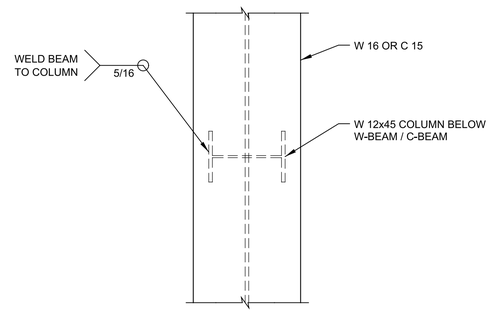

3 DETAIL
90S02 SCALE: 1" = 1'-0"
FILE: 10976A1090S401

THIS CONFORMED DOCUMENT IS RELEASED FOR THE CONVENIENCE OF THE CONTRACTOR UNDER THE AUTHORITY OF:

DANNY M HURTADO, P.E. 11-01-22
TX LIC NO. 104266 DATE

SEE DISCLAIMER FOR LIMITATIONS OF USE.

CONTRACT DOCUMENTS DATED JUNE 10, 2022, AS PART OF THE BIDDING DOCUMENTS (DRAWINGS AND SPECIFICATIONS) AND SUBSEQUENTLY ISSUED ADDENDA HAVE BEEN MERGED INTO ONE CONFORMING SET OF DOCUMENTS FOR THE CONVENIENCE OF THE CONTRACTOR. IF INCONSISTENCIES OR AMBIGUITIES BETWEEN "CONFORMED" DOCUMENTS AND CONTRACT DOCUMENTS ARE FOUND, THE CONTRACT DOCUMENTS SHALL GOVERN.

REV	DATE	BY	DESCRIPTION
			CONFORMED DOCUMENTS

DESIGNED KMD
DRAWN ERR
CHECKED JDS
DATE NOVEMBER 2022

** ORIGINAL SEALED BY KWASI DUOSE 06-10-22 TX PE 100650 **

carollo® TBPELS No. F-882

CITY OF AUSTIN — FOUNDED 1839

CITY OF AUSTIN

CITY OF AUSTIN
WILD HORSE RANCH WWTP EXPANSION
STRUCTURAL
ADMINISTRATION BUILDING
SECTIONS AND DETAILS 3

VERIFY SCALES
BAR IS ONE INCH ON ORIGINAL DRAWING
0 1"
IF NOT ONE INCH ON THIS SHEET, ADJUST SCALES ACCORDINGLY

JOB NO. 10976A.00
DRAWING NO. 90S05
SHEET NO. 397 OF 464

PROJECT NO. 10976A10 FILE NAME: 10976A1090S005.dgn

PIPING SYMBOLS

DOUBLE LINE	SINGLE LINE	DESCRIPTION
		WELDED JOINT
		GROOVED END JOINT
		FLANGED JOINT
		HUB & SPIGOT JOINT (RUBBER GASKET)
		PUSH-ON JOINT (RESTRAINED)
		ADAPTER SIDE GROOVED END ADAPTER FLANGE
		FLANGED COUPLING ADAPTER
		FLANGED COUPLING ADAPTER WITH THRUST TIES
		FLEXIBLE COUPLING
		FLEXIBLE COUPLING WITH THRUST TIES
		METAL BELLOWS EXP JOINT
		ELASTOMER BELLOWS EXP JOINT
		FLEXIBLE COUPLING ADAPTER
		DISMANTLING JOINT
		EXPANSION COMPENSATOR
		ELBOW UP
		ELBOW DOWN
		TEE UP
		TEE DOWN
		LATERAL UP
		LATERAL DOWN
		CONCENTRIC REDUCER
		ECCENTRIC REDUCER (FOT. FOB)
		UNION
		CAP
		ANCHOR
		ELBOW, 90 DEGREE
		CROSS
		TEE
		ELBOW, 45 DEGREE
		ELBOW, 22.5 DEGREE
		ELBOW, 11.25 DEGREE
		LATERAL

DOUBLE LINE	SINGLE LINE	DESCRIPTION
		GATE VALVE
	K	KNIFE GATE VALVE
		BUTTERFLY VALVE
V	V	CHARACTERIZED BALL CONTROL VALVE
		BALL VALVE
		GLOBE VALVE
		3-WAY GLOBE TYPE MIXING VALVE
		DIAPHRAGM VALVE
		PLUG VALVE
		LUBRICATED PLUG VALVE
		ECCENTRIC PLUG VALVE
		SWING CHECK VALVE
		WAFER CHECK VALVE
		PINCH VALVE
		BALL CHECK VALVE
		DUAL CHECK VALVE
		SILENT CHECK VALVE
		MUD VALVE (PLAN VIEW)
		NEEDLE VALVE
		CHECK BACKFLOW PREVENTER
		PIPE MATERIAL CHANGE

MECHANICAL SYMBOLS

SINGLE LINE	DESCRIPTION
	AIR OR CHEMICAL DIFFUSER
	QUICK DISCONNECT HIGH PRESSURE AIR OR FLUSHING
	BATCHMETER
	AIR VENT
	BASKET STRAINER
	BLOWER
	CALIBRATION COLUMN
	COMPRESSOR/TURBINE
	COMPRESSOR: RECIPROCATING
	DIAPHRAGM SEAL
	DRAIN
	EJECTOR OR EDUCTOR
M	ELECTRIC MOTOR
	EQUIPMENT DRAIN
	EXPANSION JOINT, FLEXIBLE VIBRATION JOINT
	FAN: EXHAUST/SUPPLY
	FILTER
	FIRE HYDRANT
	FLAME ARRESTER
	FLAME ARRESTER WITH THERMALLY OPERATED VALVE
	FLOOR DRAIN
	FLOW SWITCH
	GAUGE: PRESSURE
	GAUGE: DIFFERENTIAL PRESSURE
	WEIR
	MIXER
	OIL OR MOISTURE TRAP
	PRIMARY LEVEL ELEMENT: BUBBLER
	PRIMARY LEVEL ELEMENT: ELECTRODE
	PRIMARY LEVEL ELEMENT: FLOAT SWITCH
	PRIMARY LEVEL ELEMENT: FLUID
	PRIMARY LEVEL ELEMENT: INVERTED COLUMN

SINGLE LINE	DESCRIPTION
	PRIMARY LEVEL ELEMENT: RADAR
	PRIMARY LEVEL ELEMENT: ULTRASONIC
	PRIMARY FLOW ELEMENT: FLUME
X	PRIMARY FLOW ELEMENT: X = C - CORIOLOS X = M - MAGNETIC X = P - PROPELLER X = PT - PITOT TUBE X = R - ROTAMETER X = T - TURBINE X = TH - THERMAL X = U - ULTRASONIC X = D - DENSITY
	PRIMARY FLOW ELEMENT: ORIFICE PLATE
	PRIMARY FLOW ELEMENT: VENTURI TUBE
	PRIMARY FLOW ELEMENT: WEIR
	PULSATION DAMPENER
	PUMP: CENTRIFUGAL
	PUMP: DIAPHRAGM
	PUMP: METERING
	PUMP: PLUNGER
	PUMP: PERISTALTIC TUBE METERING
	PUMP: PROGRESSIVE CAVITY
	PUMP: RECIPROCATING
	PUMP: ROTARY
	PUMP: SCREW
	PUMP: SUBMERSIBLE
	PUMP: VERTICAL LIFT
	PIPE REDUCER: CONCENTRIC
	PIPE REDUCER: ECCENTRIC (FOT, FOB)
	ROTARY CHEMICAL FEEDER
	RUPTURE DISK
	SAMPLE PORT
	SIGHT GLASS
	SLIDE GATE
	SLUICE GATE
	STRAINER: WYE TYPE

SINGLE LINE	DESCRIPTION
	STRAINER: WYE TYPE WITH BLOWOFF
	THERMOMETER
	VALVE: ANGLE
	VALVE: AIR RELIEF
	VALVE: BALL
	VALVE: BALL CHECK
	VALVE: BUTTERFLY
	VALVE: CONE
	VALVE: DIAPHRAGM
	VALVE: FLAPPER CHECK
	VALVE: FOUR WAY
	VALVE: GATE
	VALVE: GLOBE
	VALVE: HOSE
	VALVE: NEEDLE
	VALVE: PINCH
	VALVE: PLUG CONCENTRIC
	VALVE: PLUG ECCENTRIC
	VALVE: PRESSURE RELIEF PRESSURE-REDUCING REGULATOR
	VALVE: SWING CHECK
	VALVE: TELESCOPING
	VALVE: THREE WAY AIR OPERATED
M	VALVE: THREE WAY MOTOR OPERATED
S	VALVE: THREE WAY SOLENOID OPERATED
	VALVE: VACUUM
	BACKPRESSURE REGULATOR SELF-CONTAINED
	BACKPRESSURE REGULATOR W/ EXTERNAL PRESSURE TAP
	PRESSURE-REDUCING REGULATOR: SELF-CONTAINED
	PRESSURE-REDUCING REGULATOR W/EXTERNAL PRESSURE TAP

THIS CONFORMED DOCUMENT IS RELEASED FOR THE CONVENIENCE OF THE CONTRACTOR UNDER THE AUTHORITY OF:

11-01-22

DANNY M HURTADO, P.E. DATE
TX LIC NO. 104266

SEE DISCLAIMER FOR LIMITATIONS OF USE.

CONTRACT DOCUMENTS DATED JUNE 10, 2022, AS PART OF THE BIDDING DOCUMENTS (DRAWINGS AND SPECIFICATIONS) AND SUBSEQUENTLY ISSUED ADDENDA HAVE BEEN MERGED INTO ONE CONFORMING SET OF DOCUMENTS FOR THE CONVENIENCE OF THE CONTRACTOR. IF INCONSISTENCIES OR AMBIGUITIES BETWEEN "CONFORMED" DOCUMENTS AND CONTRACT DOCUMENTS ARE FOUND, THE CONTRACT DOCUMENTS SHALL GOVERN.

REV	DATE	BY	DESCRIPTION
			CONFORMED DOCUMENTS

DESIGNED JPH
DRAWN LGD
CHECKED DMH
DATE NOVEMBER 2022

** ORIGINAL SEALED BY DANNY M. HURTADO 06-10-22 TX PE 104266 **

carollo®
TBPELS No. F-882

CITY OF AUSTIN
FOUNDED 1839
CITY OF AUSTIN

CITY OF AUSTIN
WILD HORSE RANCH WWTP EXPANSION
GENERAL
MECHANICAL LEGEND AND SYMBOLS

VERIFY SCALES
BAR IS ONE INCH ON ORIGINAL DRAWING
0 1"
IF NOT ONE INCH ON THIS SHEET, ADJUST SCALES ACCORDINGLY

JOB NO. 10976A.00
DRAWING NO. 00GM01
SHEET NO. 398 OF 464

PROJECT NO. 10976A10 FILE NAME: 10976A1000GM001.dgn

LAST SAVED BY: lveloz
Model: Layout1 ColorTable: gshade.ctb DesignScript: Carollo_Std_Pen_v0905.pen PlotScale: 1:1
Plot Date: 11-OCT-2022 7:53:13 AM
User: LDietzel

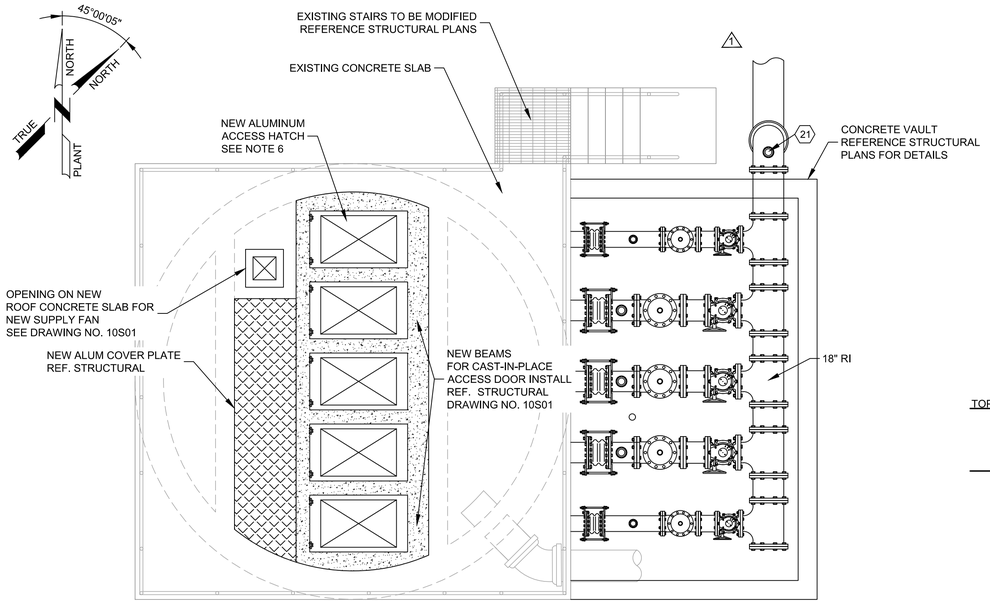

A PLAN VIEW AT ELEVATION 486.00'

SCALE: 1/4" = 1'-0"
FILE: 109517-00004-PROPOSED 90%.dwg

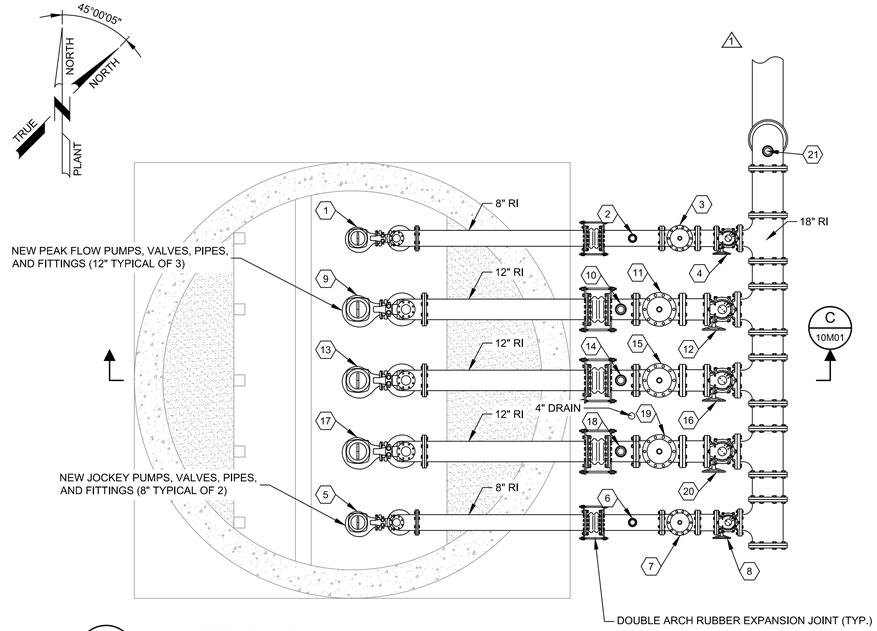

B LOWER PLAN

SCALE: 1/4" = 1'-0"
FILE: 109517-00004-PROPOSED 90%.dwg

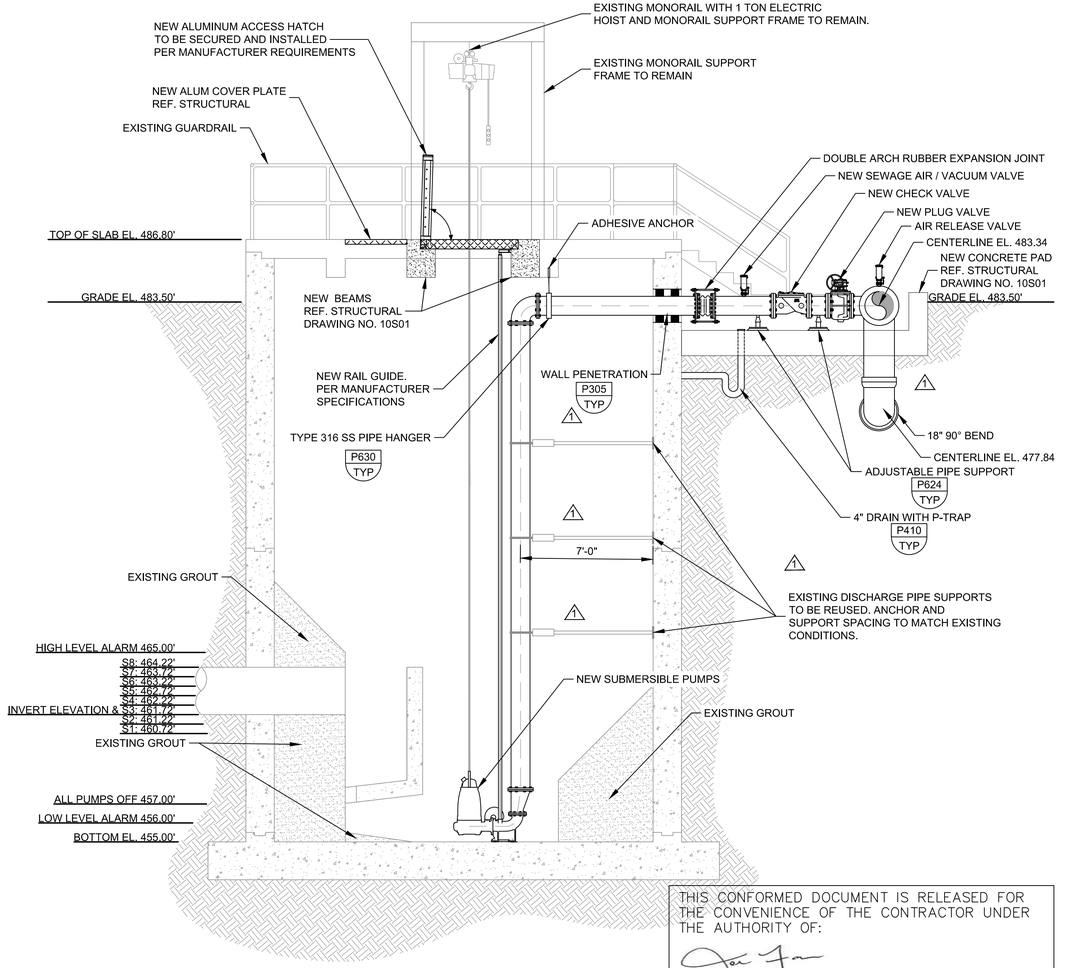

C 10M01 INFLUENT LIFT STATION SECTION A

SCALE: 1/4" = 1'-0"
FILE: FINAL SUBMITTAL

GENERAL NOTES:

1. PUMP SUPPLIER STATES THAT MINIMUM APERTURE FOR SUBMERSIBLE PUMPS MUST BE 30-INCH X 48-INCH. ACCESS COVERS ARE H-20 LOAD RATING. ACCESS COVERS WILL INCLUDE AN ALUMINUM SAFETY GRATE. TOTAL OF 5 ACCESS HATCHES WILL BE INSTALLED BY CAST IN PLACE CONCRETE.
2. PUMP SUPPLIER SHALL PROVIDE THE GUIDE RAILS (OR DIMENSION OF) TO ENSURE COMPATIBILITY WITH SUPPLIED EQUIPMENT. THE PUMP SHALL BE EASILY REMOVED FOR INSPECTION OR SERVICE. PERSONNEL SHALL HAVE NO REASON TO ENTER THE WET WELL. GUIDE RAILS SHALL BE SUPPORTED EVERY 10' WITH TYPE 316 STAINLESS STEEL SUPPORTS.
3. THE GUIDE BRACKETS SHALL BE CONSTRUCTED OF 316 STAINLESS STEEL. GUIDE BRACKETS FOR EACH PUMP MUST BE SUPPLIED BY THE PUMP MANUFACTURER TO ENSURE COMPATIBILITY WITH SUPPLIED EQUIPMENT.
4. EACH PUMPING UNIT SHALL BE PROVIDED WITH A TYPE 316 STAINLESS STEEL LIFTING CHAIN OR CABLE. LIFTING CHAIN SHALL EXTEND AT LEAST 3' TO 4' ABOVE WET WELL.
5. ALL DISCHARGE LINES SHALL HAVE ADEQUATE THRUST SUPPORT MEMBERS AT EACH FITTING. WHERE POSSIBLE, LONG RADIUS 90 DEGREE BENDS SHALL BE USED.
6. HATCH SHALL BE CHS1-HEAVY DUTY H-20 LOAD RATING PRODUCT NO. 202011-23516 OR EQUAL.
7. CONTRACTOR TO FIELD VERIFY WET WELL DEPTH AND ELEVATION OF INFLUENT PIPE. IF THERE ARE ANY DISCREPANCIES ENGINEER SHALL BE NOTIFIED.
8. EXPOSED NEW CONCRETE WITHIN THE WET WELL AND AREAS WITHIN WET WELL WHERE EXISTING COATING IS DISTURBED BY CONSTRUCTION SHALL BE COATED WITH HYBRID POLYURETHANE (POL-C-BSC) PER SPECIFICATION 09960.

EQUIPMENT TAGS:

#		
1	LIFT STATION JOCKEY PUMP NO. 1	LS-PUMP-01
2	LS JOCKEY PUMP NO. 1 2" AIR/VAC VALVE (1)	LS-PU1-ARV-01
3	LS JOCKEY PUMP NO. 1 8 CHECK VALVE	LS-PU1-CV-01
4	LS JOCKEY PUMP NO. 1 8" PLUG VALVE	LS-PU1-PV-01
5	LIFT STATION JOCKEY PUMP NO. 2	LS-PUMP-02
6	LS JOCKEY PUMP NO. 2 2" AIR/VAC VALVE (1)	LS-PU2-ARV-01
7	LS JOCKEY PUMP NO. 2 8" CHECK VALVE	LS-PU2-CV-01
8	LS JOCKEY PUMP NO. 2 8" PLUG VALVE	LS-PU2-PV-01
9	LIFT STATION PEAK PUMP NO. 3	LS-PUMP-03
10	LS PEAK PUMP NO. 3 2" AIR/VAC VALVE (1)	LS-PU3-ARV-01
11	LS PEAK PUMP NO. 3 12" CHECK VALVE	LS-PU3-CV-01
12	LS PEAK PUMP NO. 3 12" PLUG VALVE	LS-PU3-PV-01
13	LIFT STATION PEAK PUMP NO. 4	LS-PUMP-04
14	LS PEAK PUMP NO. 4 2" AIR/VAC VALVE (1)	LS-PU4-ARV-01
15	LS PEAK PUMP NO. 4 12" CHECK VALVE	LS-PU4-CV-01
16	LS PEAK PUMP NO. 4 12" PLUG VALVE	LS-PU4-PV-01
17	LIFT STATION PEAK PUMP NO. 5	LS-PUMP-05
18	LS PEAK PUMP NO. 5 2" AIR/VAC VALVE (1)	LS-PU5-ARV-01
19	LS PEAK PUMP NO. 5 12" CHECK VALVE	LS-PU5-CV-01
20	LS PEAK PUMP NO. 5 12" PLUG VALVE	LS-PU5-PV-01
21	2" SEWAGE AIR RELEASE VALVE (1)	LS-LSPI1-ARV-01

PUMP OPERATION						
ELEV.	SETTING	P1(JP1)	P2(JP2)	P3(PP1)	P4(PP2)	P5(PP3)
457.00	S0	OFF	OFF	OFF	OFF	OFF
460.72	S1	ON	OFF	OFF	OFF	OFF
461.22	S2	ON	ON	OFF	OFF	OFF
461.72	S3	OFF	OFF	ON	OFF	OFF
462.22	S4	ON	OFF	ON	OFF	OFF
462.72	S5	ON	ON	ON	OFF	OFF
463.22	S6	OFF	OFF	ON	ON	OFF
463.72	S7	ON	OFF	ON	ON	OFF
464.22	S8	ON	ON	ON	ON	OFF

P1(JP1)	PUMP 1	JOCKEY PUMP 1
P2(JP2)	PUMP 2	JOCKEY PUMP 2
P3(PP1)	PUMP 3	PEAK PUMP 1
P4(PP2)	PUMP 4	PEAK PUMP 2
P5(PP3)	PUMP 5	PEAK PUMP 3

1. P1(JP1) AND P2(JP2) SHALL ALTERNATE STARTS
2. P3(PP1), P4(PP2), AND P5(PP3) SHALL ALTERNATE STARTS

THIS CONFORMED DOCUMENT IS RELEASED FOR THE CONVENIENCE OF THE CONTRACTOR UNDER THE AUTHORITY OF:

JOSE M. FARIAS, P.E.
TX LIC NO. 111389

11-01-22
DATE

SEE DISCLAIMER FOR LIMITATIONS OF USE.

CONTRACT DOCUMENTS DATED JUNE 10, 2022, AS PART OF THE BIDDING DOCUMENTS (DRAWINGS AND SPECIFICATIONS) AND SUBSEQUENTLY ISSUED ADDENDA HAVE BEEN MERGED INTO ONE CONFORMING SET OF DOCUMENTS FOR THE CONVENIENCE OF THE CONTRACTOR. IF INCONSISTENCIES OR AMBIGUITIES BETWEEN "CONFORMED" DOCUMENTS AND CONTRACT DOCUMENTS ARE FOUND, THE CONTRACT DOCUMENTS SHALL GOVERN.

CONFORMED DOCUMENTS

REV	DATE	BY	DESCRIPTION
1	8/26/2022	JF	ADDENDUM 1

DESIGNED AWI
DRAWN AWI
CHECKED KWF
DATE JULY 2021

** ORIGINAL SEALED BY JOSE M. FARIAS 06-10-22 TX PE 111389 **

garza
7708 Rialto Blvd., Suite 125
Austin, Texas 78735
Tel. (512) 298-3284 Fax (512) 298-2592
TBPE # F-14629
Garza EMC, LLC © Copyright 2022

carollo
TBPE No. F-882

CITY OF AUSTIN
FOUNDED 1839
CITY OF AUSTIN

CITY OF AUSTIN
WILD HORSE RANCH WWTP EXPANSION
MECHANICAL
INFLUENT LIFT STATION PLANS AND SECTION

VERIFY SCALES
BAR IS ONE INCH ON ORIGINAL DRAWING
0 1"
IF NOT ONE INCH ON THIS SHEET, ADJUST SCALES ACCORDINGLY

JOB NO. 10976A.10
DRAWING NO. 10M01
SHEET NO. 398 OF 464

LAST SAVED BY: FGM

PROJECT NO. 9469B10
FILE NAME: X:\109517-00004\Civil\00-CAD\109517-00004-PROPOSED 90%.dwg

Plot Date: 11-OCT-2022 7:55:07 AM
User: LDietzel
Model: Layout1 ColorTable: gshade.ctb DesignScript: Carollo_Std_Pen_v0905.pen PlotScale: 1:1
LAST SAVED BY: ldietzel

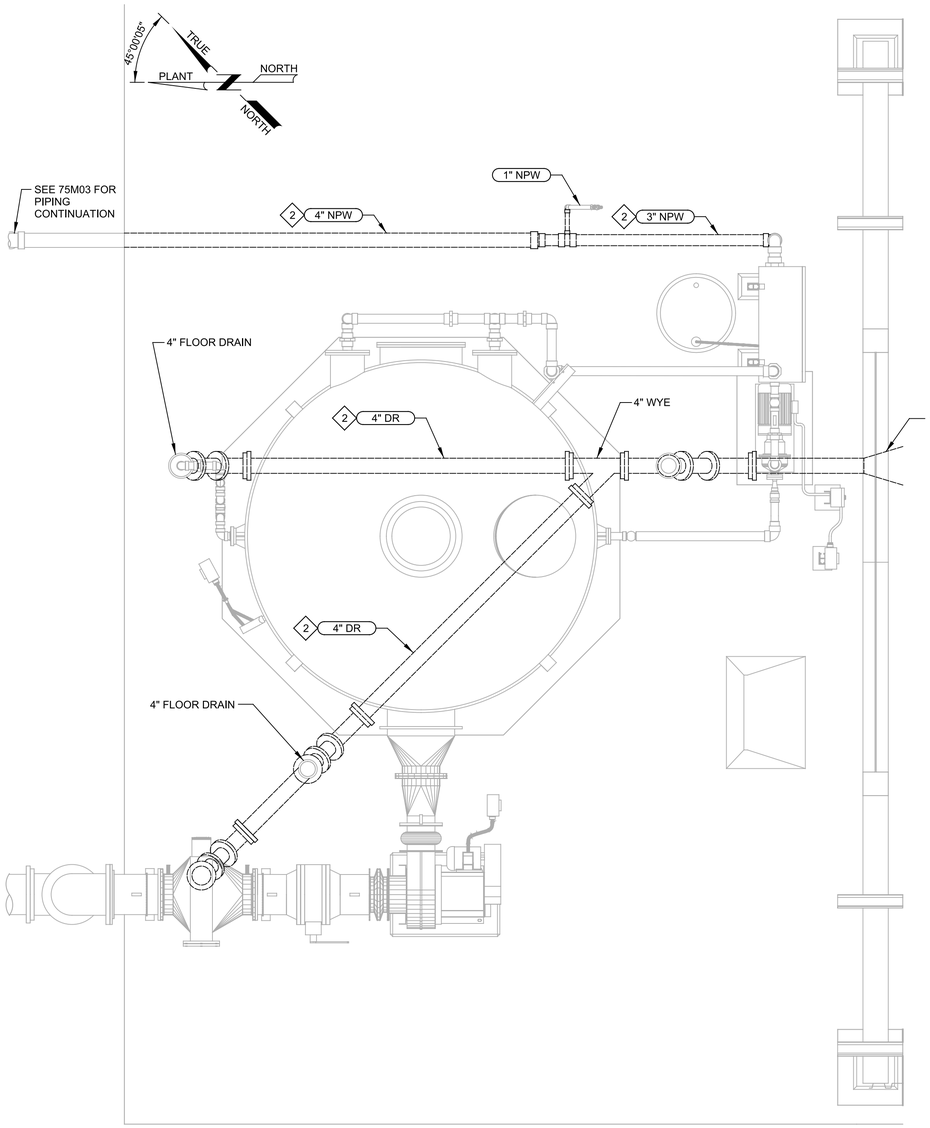

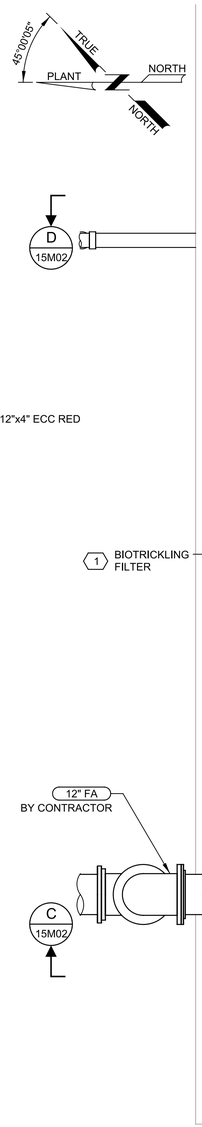

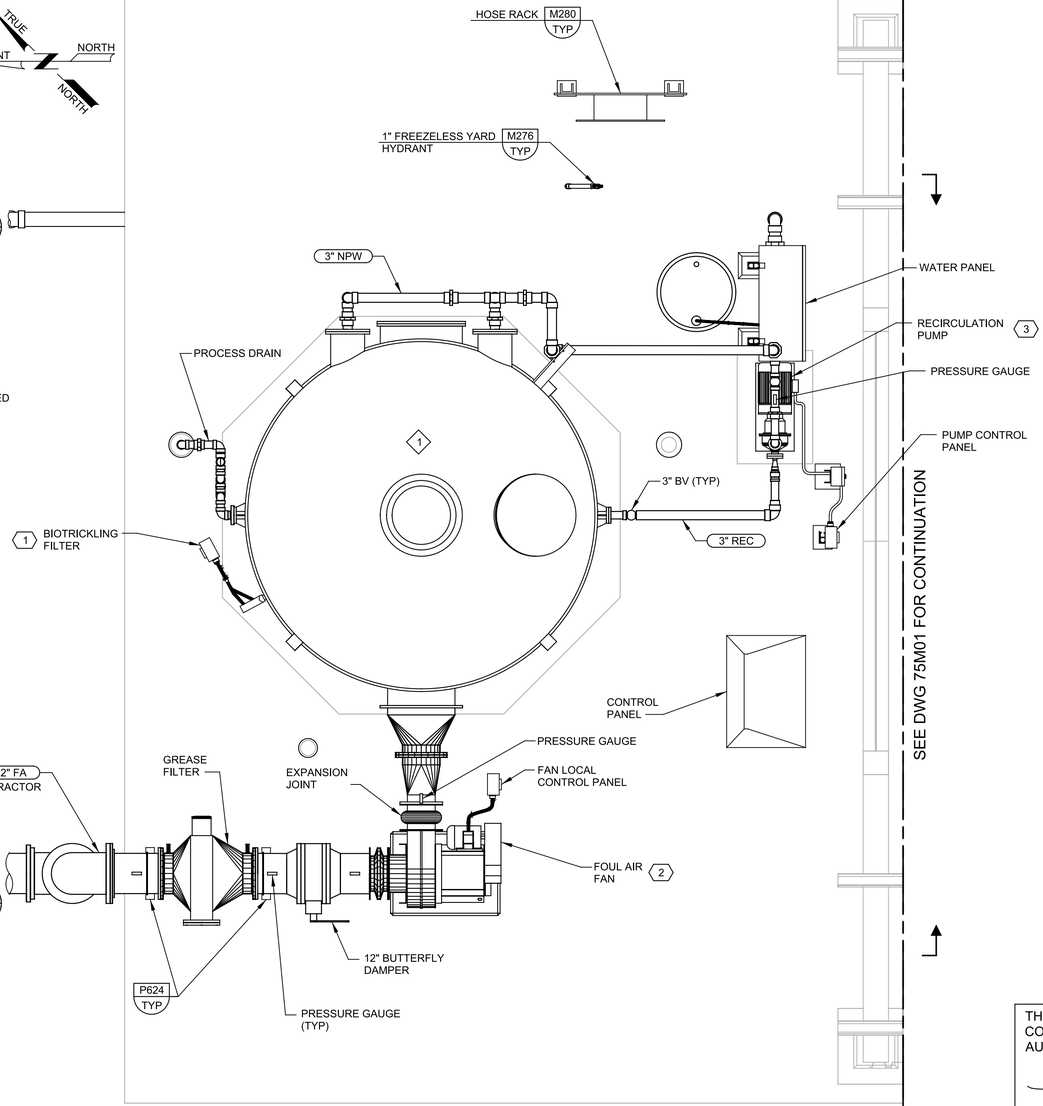

A DRAINAGE PLAN
SCALE: 1/2" = 1'-0"
FILE: 10976A1015M101

B PLAN
SCALE: 1/2" = 1'-0"
FILE: 10976A1015M101

GENERAL NOTES:

1. FOR GENERAL NOTES, REFER TO DRAWING 00G06. FOR MECHANICAL LEGEND AND SYMBOLS, REFER TO DRAWING 00GM01.
2. REFER TO CIVIL DRAWINGS FOR FOUL AIR PIPING CONTINUATION AND TIE IN TO EXISTING PIPING.

KEY NOTES:

1 ODOR CONTROL EQUIPMENT AND PANELS PROVIDED BY MANUFACTURER AS PART OF ODOR CONTROL PACKAGE PER SPEC SECTION 11395A.

2 PIPING UNDERNEATH FLOOR SHALL BE CONCRETE ENCASED PER MP142. ENCASEMENT SHALL EXTEND A MINIMUM 3 FEET FROM EXTENT OF PAVEMENT.

X EQUIPMENT TAGS:

1	ODOR CONTROL UNIT	LS-ODORCONTROL-01
2	FOUL AIR FAN	LS-BLOWER-01
3	RECIRCULATION PUMP	LS-RECYCLEPUMP-01

THIS CONFORMED DOCUMENT IS RELEASED FOR THE CONVENIENCE OF THE CONTRACTOR UNDER THE AUTHORITY OF:

DANNY M HURTADO, P.E.
TX LIC NO. 104266

11-01-22
DATE

SEE DISCLAIMER FOR LIMITATIONS OF USE.

CONTRACT DOCUMENTS DATED JUNE 10, 2022, AS PART OF THE BIDDING DOCUMENTS (DRAWINGS AND SPECIFICATIONS) AND SUBSEQUENTLY ISSUED ADDENDA HAVE BEEN MERGED INTO ONE CONFORMING SET OF DOCUMENTS FOR THE CONVENIENCE OF THE CONTRACTOR. IF INCONSISTENCIES OR AMBIGUITIES BETWEEN "CONFORMED" DOCUMENTS AND CONTRACT DOCUMENTS ARE FOUND, THE CONTRACT DOCUMENTS SHALL GOVERN.

REV	DATE	BY	DESCRIPTION
			CONFORMED DOCUMENTS

DESIGNED SMM
DRAWN LGD
CHECKED DMH
DATE NOVEMBER 2022

** ORIGINAL SEALED BY DANNY M. HURTADO 06-10-22 TX PE 104266 **

carollo®
TBPELS No. F-882

CITY OF AUSTIN
FOUNDED 1839

CITY OF AUSTIN

CITY OF AUSTIN
WILD HORSE RANCH WWTP EXPANSION
MECHANICAL
INFLUENT LIFT STATION ODOR CONTROL PLAN

VERIFY SCALES
BAR IS ONE INCH ON ORIGINAL DRAWING
0 1"
IF NOT ONE INCH ON THIS SHEET, ADJUST SCALES ACCORDINGLY

JOB NO. 10976A.00
DRAWING NO. 15M01
SHEET NO. 400 OF 464

PROJECT NO. 10976A10 FILE NAME: 10976A1015M001.dgn

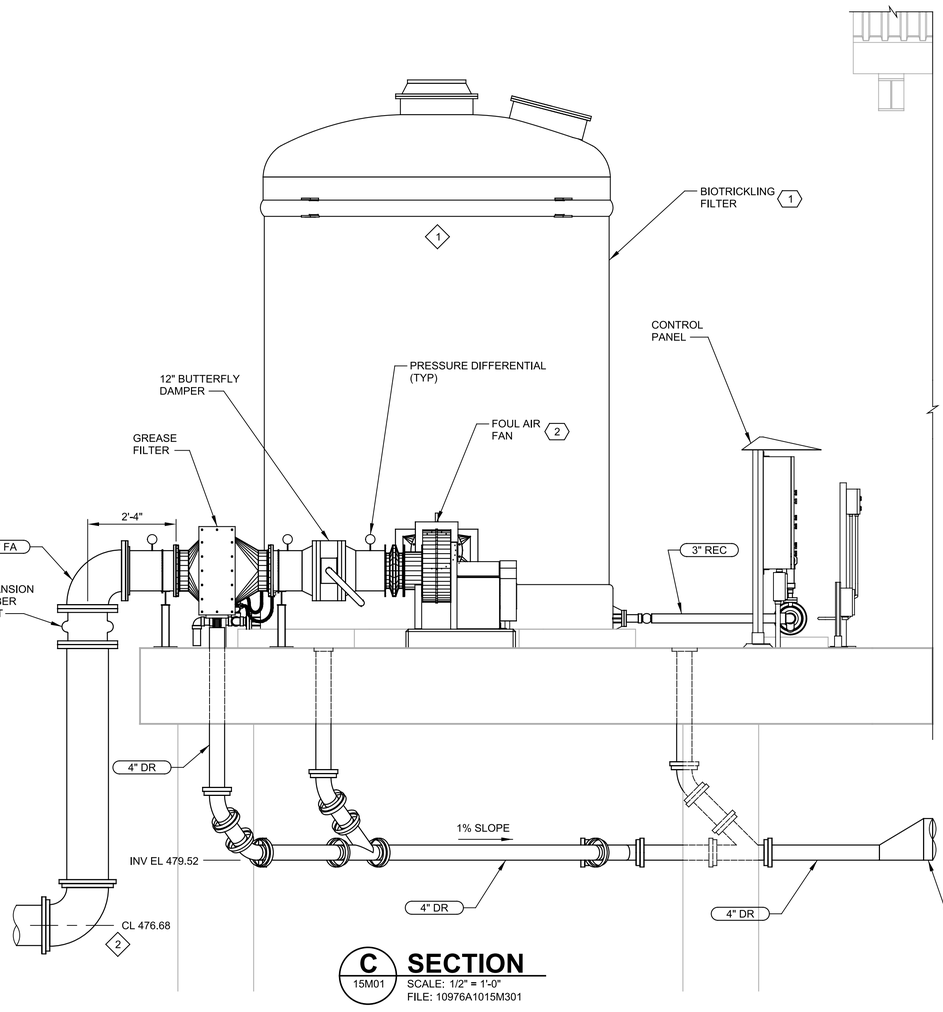

C SECTION

15M01 SCALE: 1/2" = 1'-0"
FILE: 10976A1015M301

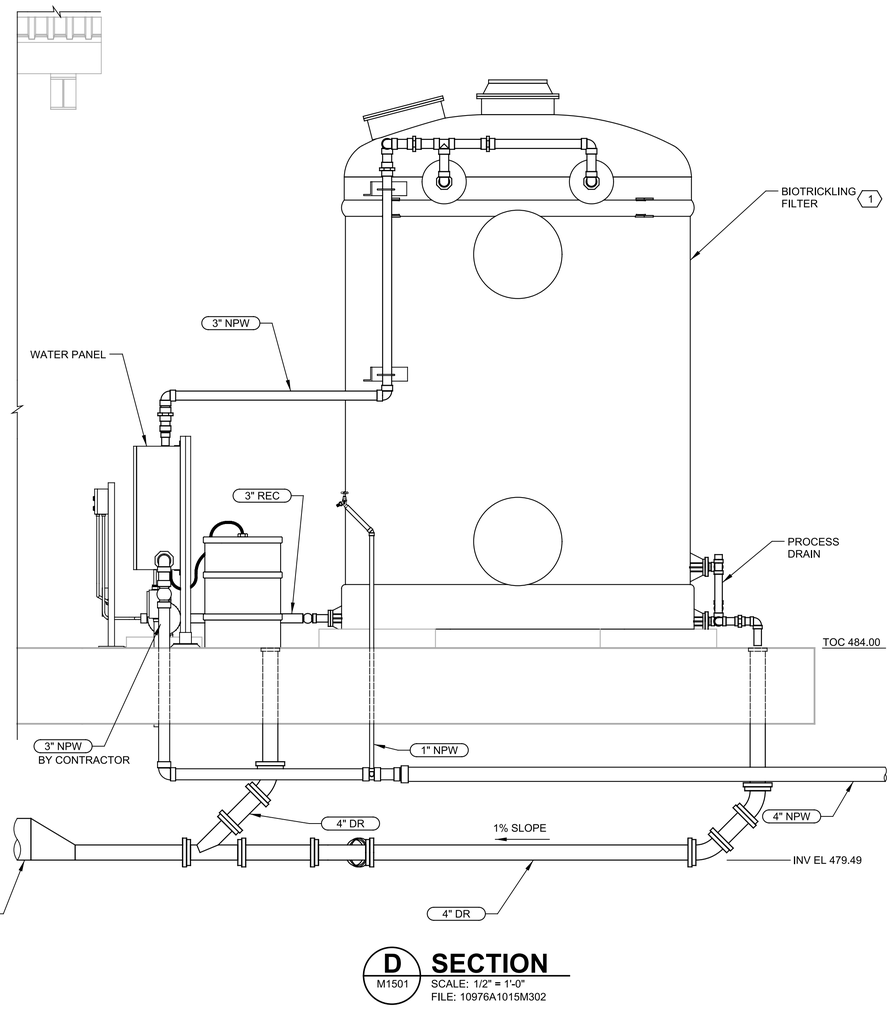

D SECTION

M1501 SCALE: 1/2" = 1'-0"
FILE: 10976A1015M302

GENERAL NOTES:

1. FOR GENERAL NOTES, REFER TO DRAWING 00G06. FOR MECHANICAL LEGEND AND SYMBOLS, REFER TO DRAWING 00GM01.
2. REFER TO CIVIL DRAWINGS FOR FOUL AIR PIPING CONTINUATION AND TIE IN TO EXISTING PIPING.

KEY NOTES:

1 ODOR CONTROL EQUIPMENT AND PANELS PROVIDED BY MANUFACTURER AS PART OF ODOR CONTROL PACKAGE PER SPEC SECTION 11395A.

2 PROPOSED FOUL AIR PIPING SHALL BE THE SAME ELEVATION AS EXISTING FOUL AIR PIPING LEAVING THE LIFT STATION. CONTRACTOR TO VERIFY CENTERLINE ELEVATION OF EXISTING FOUL AIR PIPING IN THE FIELD.

X EQUIPMENT TAGS:

1	ODOR CONTROL UNIT	LS-ODORCONTROL-01
2	FOUL AIR FAN	LS-BLOWER-01

THIS CONFORMED DOCUMENT IS RELEASED FOR THE CONVENIENCE OF THE CONTRACTOR UNDER THE AUTHORITY OF:

DANNY M HURTADO, P.E.
TX LIC NO. 104266

11-01-22
DATE

SEE DISCLAIMER FOR LIMITATIONS OF USE.

CONTRACT DOCUMENTS DATED JUNE 10, 2022, AS PART OF THE BIDDING DOCUMENTS (DRAWINGS AND SPECIFICATIONS) AND SUBSEQUENTLY ISSUED ADDENDA HAVE BEEN MERGED INTO ONE CONFORMING SET OF DOCUMENTS FOR THE CONVENIENCE OF THE CONTRACTOR. IF INCONSISTENCIES OR AMBIGUITIES BETWEEN "CONFORMED" DOCUMENTS AND CONTRACT DOCUMENTS ARE FOUND, THE CONTRACT DOCUMENTS SHALL GOVERN.

CONFORMED DOCUMENTS

REV	DATE	BY	DESCRIPTION

DESIGNED SMM
DRAWN LGD
CHECKED DMH
DATE NOVEMBER 2022

** ORIGINAL SEALED BY DANNY M. HURTADO 06-10-22 TX PE 104266 **

carollo®
TBPELS No. F-882

CITY OF AUSTIN

CITY OF AUSTIN
WILD HORSE RANCH WWTP EXPANSION
MECHANICAL
INFLUENT LIFT STATION ODOR CONTROL SECTIONS

VERIFY SCALES
BAR IS ONE INCH ON ORIGINAL DRAWING
0 1"
IF NOT ONE INCH ON THIS SHEET, ADJUST SCALES ACCORDINGLY

JOB NO. 10976A.00
DRAWING NO. 15M02
SHEET NO. 401 OF 464

PROJECT NO. 10976A10 FILE NAME: 10976A1015M002.dgn

Plot Date: 11-OCT-2022 7:57:20 AM
User: LDietzel
PlotScale: 1:1
DesignScript: Carollo_Std_Pen_v0905.pen
ColorTable: gshade.ctb
Model: Layout1
LAST SAVED BY: ldietzel

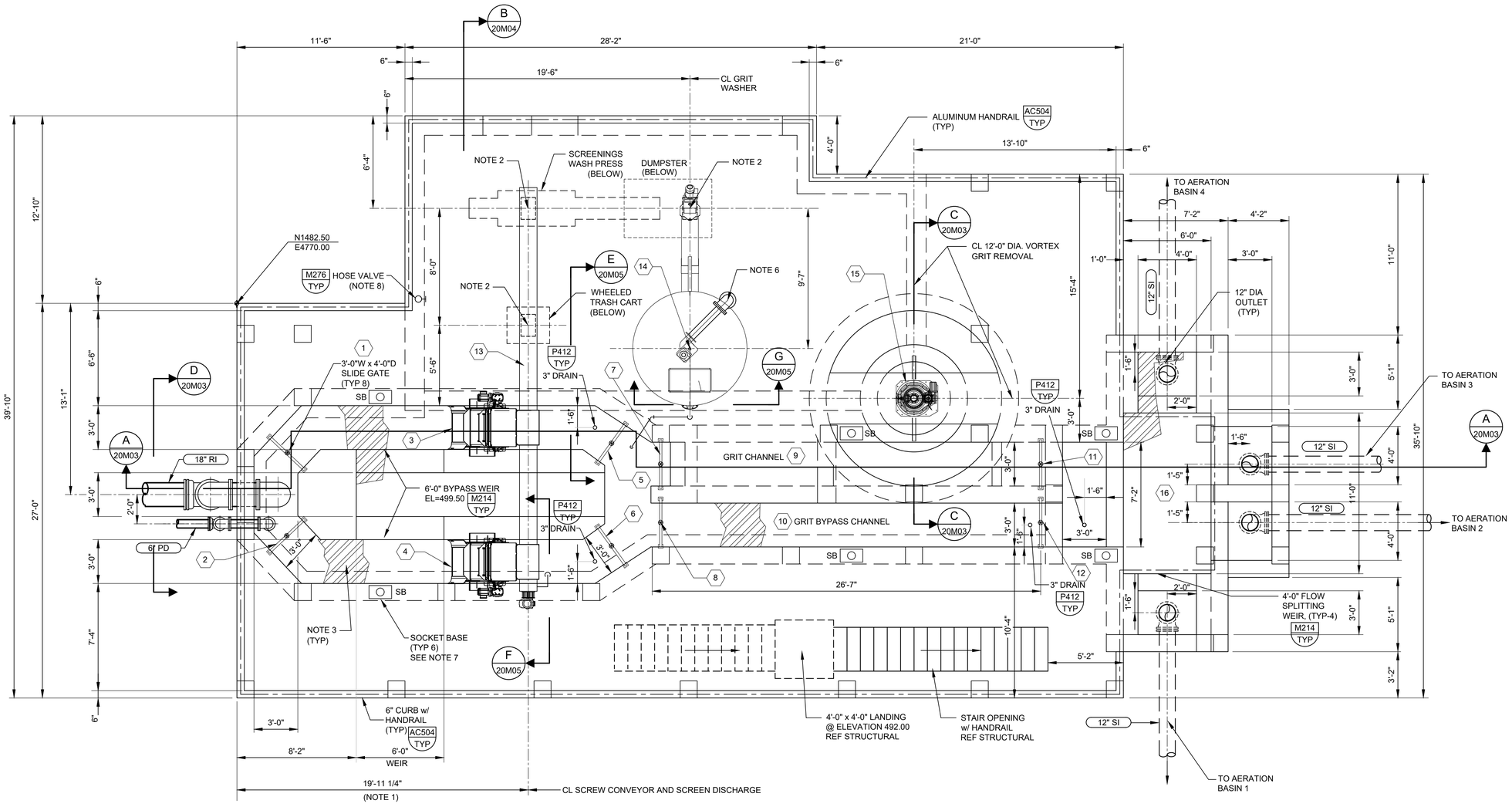

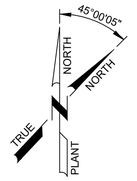

X	EQUIPMENT TAGS	
1	SLIDE GATE U/S BAR SCREEN 1	HW-BS1-SG-01
2	SLIDE GATE U/S BAR SCREEN 2	HW-BS2-SG-01
3	MULTI-RAKE BAR SCREEN 1	HW-SCREEN-01
4	MULTI-RAKE BAR SCREEN 2	HW-SCREEN-02
5	SLIDE GATE D/S BAR SCREEN 1	HW-BS1-SG-02
6	SLIDE GATE D/S BAR SCREEN 2	HW-BS2-SG-02
7	SLIDE GATE U/S VORTEX GRIT	HW-GB1-SG-01
8	SLIDE GATE U/S GRIT BYPASS	HW-GB2-SG-02
9	GRIT CHANNEL	HW-GRITBASIN-01
10	GRIT BYPASS CHANNEL	HW-GRITBASIN-02
11	SLIDE GATE D/S VORTEX GRIT	HW-GB1-SG-02
12	SLIDE GATE D/S GRIT BYPASS	HW-GB2-SG-02
13	SCREENINGS CONVEYOR	HW-CONVEYOR-01
14	GRIT WASHER	HW-GRITWASHER-01
15	VORTEX GRIT CHAMBER EQUIPMENT	HW-GRITMECH-01
16	FLOW SPLIT TO AERATION BASINS	HW-FLOWBOX-01

NOTES:

1. CONTRACTOR TO FIELD VERIFY AND ADJUST THE CENTERLINE OF THE SCREW CONVEYOR AND SCREEN DISCHARGE AS NEEDED BASED ON THE ACTUAL SIZE OF THE PROPOSED BAR SCREENS AND SCREW CONVEYOR, TO ALIGN WITH DISCHARGE PENETRATIONS TO FLOOR BELOW.
2. RAISED CURB AROUND 22" x 16" FLOOR OPENING. REFER TO STRUCTURAL DRAWINGS. CONTRACTOR SHALL CONFIRM OPENING SIZE AND LOCATION WITH SCREW CONVEYOR MANUFACTURER FOR DISCHARGE CHUTE.
3. COVER PLATE ON ALL CHANNELS AND OPEN BASINS. REFER TO STRUCTURAL DRAWINGS.
4. REFER TO DRAWING 20H02 FOR FOUL AIR PIPING SLAB PENETRATIONS AND LOCATION OF PIPING ON THE FLOOR.
5. REFER TO STRUCTURAL DRAWINGS FOR FLOOR SLOPE TO FACILITATE DRAINAGE OFF THE UPPER LEVEL.
6. CONTRACTOR TO LOCATE FLOOR PENETRATION FOR 3" DIA. GRIT PUMP DISCHARGE LINE ACCORDING TO GRIT WASHER PLACEMENT. CONNECT 6" DIA. GRIT WASHER INLET AND 3" DIA. GRIT PUMP DISCHARGE ACCORDINGLY. REFERENCE DRAWINGS 20M02 AND 20M06 FOR GRIT PUMP LOCATION.
7. FLOOR MOUNTED DAVIT CRANE SOCKET BASE TO BE MOUNTED FLUSH WITH FLOOR IN LOCATIONS SHOWN ON PLANS. SOCKET BASE SHALL BE STAINLESS STEEL, MANUFACTURED BY 3M, MODEL DBI SALA 8512828. SOCKET BASE SHALL BE PROVIDED WITH STAINLESS STEEL HEAVY DUTY SLEEVE CAP MANUFACTURED BY 3M, MODEL 8510827.
8. CONTRACTOR TO COORDINATE 1" NPW PIPE TOP SLAB PENETRATION WITH HOSE VALVE PLACEMENT.
9. THE WALLS AND FLOORS OF ALL CHANNELS AND BASINS THAT CONVEY WASTEWATER WITHIN THE HEADWORKS STRUCTURE SHALL BE COATED WITH HYBRID POLYURETHANE (POL-C-I-BSE) AS SPECIFIED IN SPECIFICATION 09960.

A HEADWORKS UPPER PLAN ELEV 501.00

SCALE: 1/4"=1'-0"
FILE: 10976A1020S102.DWG

THIS CONFORMED DOCUMENT IS RELEASED FOR THE CONVENIENCE OF THE CONTRACTOR UNDER THE AUTHORITY OF:

CASEY G. WAUTERS, P.E. 11-01-22
TX LIC NO. 93889 DATE

SEE DISCLAIMER FOR LIMITATIONS OF USE.

CONTRACT DOCUMENTS DATED JUNE 10, 2022, AS PART OF THE BIDDING DOCUMENTS (DRAWINGS AND SPECIFICATIONS) AND SUBSEQUENTLY ISSUED ADDENDA HAVE BEEN MERGED INTO ONE CONFORMING SET OF DOCUMENTS FOR THE CONVENIENCE OF THE CONTRACTOR. IF INCONSISTENCIES OR AMBIGUITIES BETWEEN "CONFORMED" DOCUMENTS AND CONTRACT DOCUMENTS ARE FOUND, THE CONTRACT DOCUMENTS SHALL GOVERN.

REV	DATE	BY	DESCRIPTION
			CONFORMED DOCUMENTS

DESIGNED RL/CW
DRAWN AW
CHECKED SGE
DATE FEBRUARY 2022

** ORIGINAL SEALED BY CASEY G. WAUTERS, P.E. 2/28/2022 TX PE 93889 **

AECOM TECHNICAL SERVICES INC.
13640 BRIARWICK DRIVE, SUITE 200
AUSTIN, TEXAS 78729
WWW.AECOM.COM
TBPE REG. NO. F-3580

carollo
TBPE No. F-882

CITY OF AUSTIN
FOUNDED 1839
CITY OF AUSTIN

CITY OF AUSTIN
WILD HORSE RANCH WWTP EXPANSION
MECHANICAL
HEADWORKS UPPER PLAN

VERIFY SCALES
BAR IS ONE INCH ON ORIGINAL DRAWING
0 1"
IF NOT ONE INCH ON THIS SHEET, ADJUST SCALES ACCORDINGLY

JOB NO. 10976A.10
DRAWING NO. 20M01
SHEET NO. 402 OF 464

LAST SAVED BY:

PROJECT NO. 9585A10 FILE NAME:

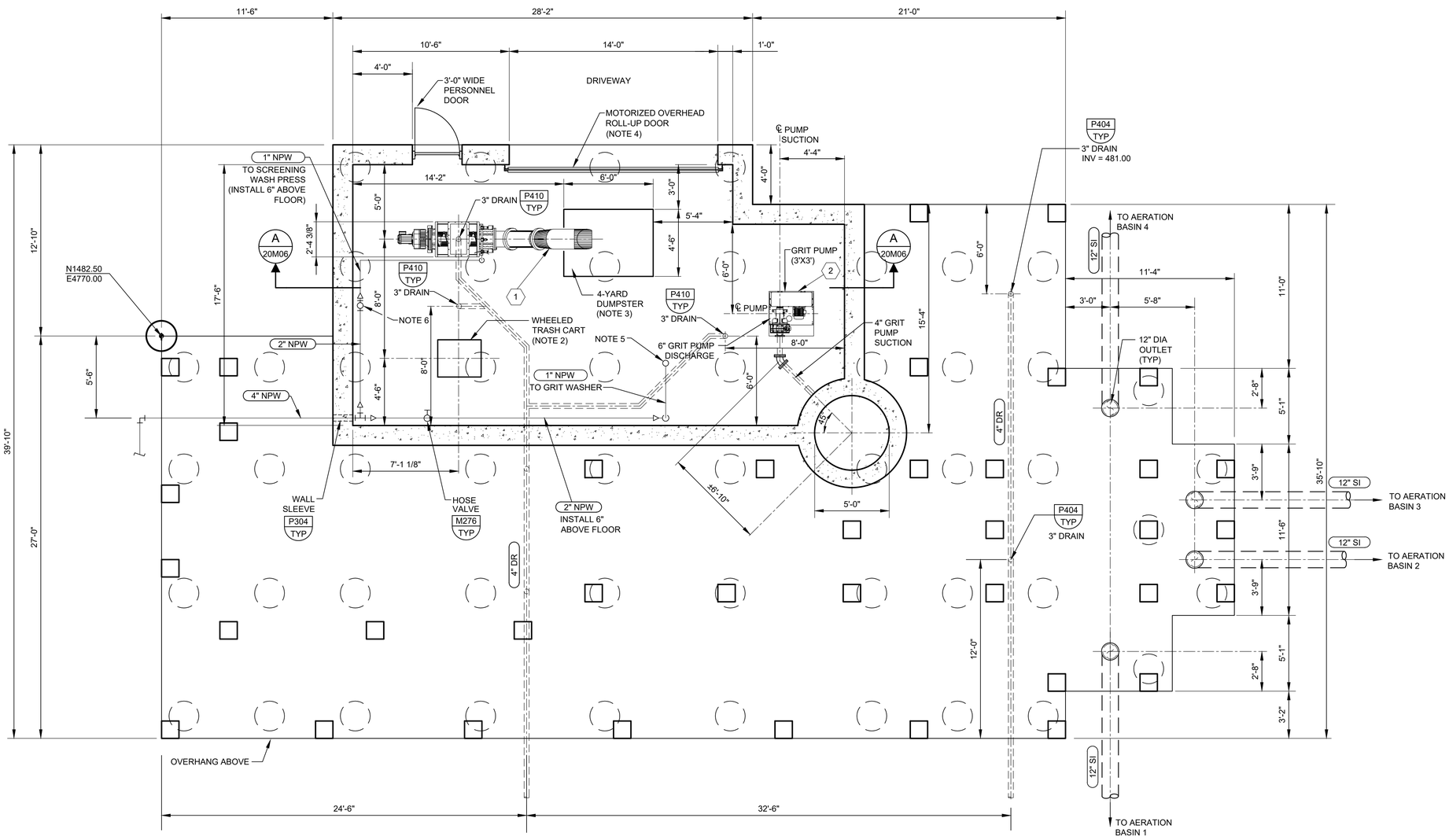

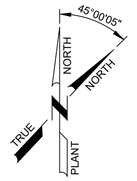

X	EQUIPMENT TAGS	
1	SCREENINGS WASH PRESS	HW-COMPACTOR-01
2	GRIT PUMP	HW-GRITPUMP-01

NOTES:

1. CONTRACTOR TO FIELD VERIFY AND ADJUST THE CENTERLINE OF THE SCREW CONVEYOR AND SCREEN DISCHARGE AS NEEDED BASED ON THE ACTUAL SIZE OF THE PROPOSED BAR SCREENS AND SCREW CONVEYOR, TO ALIGN WITH DISCHARGE PENETRATIONS TO FLOOR BELOW.
2. CONTRACTOR TO PROVIDE GREENWOOD POLYETHYLENE 96-GALLON WHEELED TRASH CART, OR APPROVED EQUAL. TRASH CART TO BE 30"WIDE x 36"LONG x 43.5"HIGH.
3. CONTRACTOR TO PROVIDE 4-CUBIC YARD FRONTLOAD DUMPSTER, SIZED 4.5 FT WIDE x 6 FT LONG x 4 FT HIGH.
4. CONTRACTOR TO PROVIDE STEEL OVERHEAD COILING DOOR PER SPECIFICATION 08332. DOOR CLEAR OPENING SHALL BE NO LESS THAN 14 FEET WIDE x 12.5 FEET HIGH.
5. CONTRACTOR TO COORDINATE 1" NPW PIPE TOP SLAB PENETRATION WITH GRIT WASHER PLACEMENT. CONNECT 1" NPW PIPE TO 1" WASH WATER BALL VALVE ON THE BOTTOM OF GRIT WASHER.
6. CONTRACTOR TO COORDINATE 1" NPW PIPE VERTICALLY ALONG WALL TO TOP SLAB PENETRATION WITH HOSE VALVE PLACEMENT ON UPPER LEVEL.

B HEADWORKS LOWER PLAN ELEV 485.00

SCALE: 1/4"=1'-0"
FILE: 10976A1020S101.DWG

THIS CONFORMED DOCUMENT IS RELEASED FOR THE CONVENIENCE OF THE CONTRACTOR UNDER THE AUTHORITY OF:

CASEY G. WAUTERS, P.E. — 11-01-22 DATE
TX LIC NO. 93889

SEE DISCLAIMER FOR LIMITATIONS OF USE.

CONTRACT DOCUMENTS DATED JUNE 10, 2022, AS PART OF THE BIDDING DOCUMENTS (DRAWINGS AND SPECIFICATIONS) AND SUBSEQUENTLY ISSUED ADDENDA HAVE BEEN MERGED INTO ONE CONFORMING SET OF DOCUMENTS FOR THE CONVENIENCE OF THE CONTRACTOR. IF INCONSISTENCIES OR AMBIGUITIES BETWEEN "CONFORMED" DOCUMENTS AND CONTRACT DOCUMENTS ARE FOUND, THE CONTRACT DOCUMENTS SHALL GOVERN.

REV	DATE	BY	DESCRIPTION
			CONFORMED DOCUMENTS

DESIGNED RL/CW
DRAWN AW
CHECKED SGE
DATE FEBRUARY 2022

ORIGINAL SEALED BY CASEY G. WAUTERS, P.E. 2/28/2022 TX PE 93889

AECOM TECHNICAL SERVICES INC.
13640 BRIARWICK DRIVE, SUITE 200
AUSTIN, TEXAS 78729
WWW.AECOM.COM
TBPE REG. NO. F-3580

carollo
TBPE No. F-882

CITY OF AUSTIN

CITY OF AUSTIN
WILD HORSE RANCH WWTP EXPANSION
MECHANICAL
HEADWORKS LOWER PLAN

VERIFY SCALES
BAR IS ONE INCH ON ORIGINAL DRAWING
0 1"
IF NOT ONE INCH ON THIS SHEET, ADJUST SCALES ACCORDINGLY

JOB NO. 10976A.10
DRAWING NO. 20M02
SHEET NO. 403 OF 464

LAST SAVED BY:

PROJECT NO. 9585A10 FILE NAME: 9585A10_SheetSeed.dgn

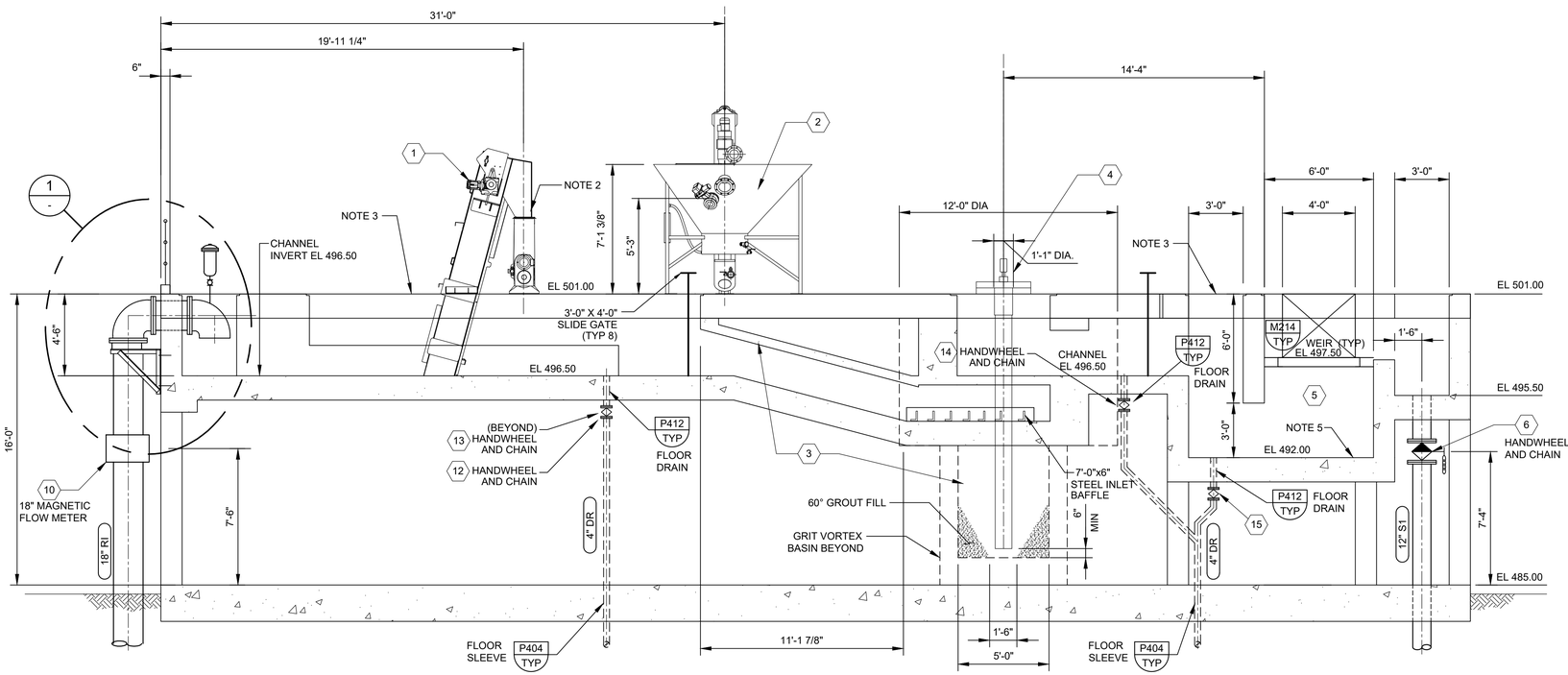

A SECTION
20M01 SCALE: 1/4"=1'-0"
FILE: 10976A1020S302.DWG

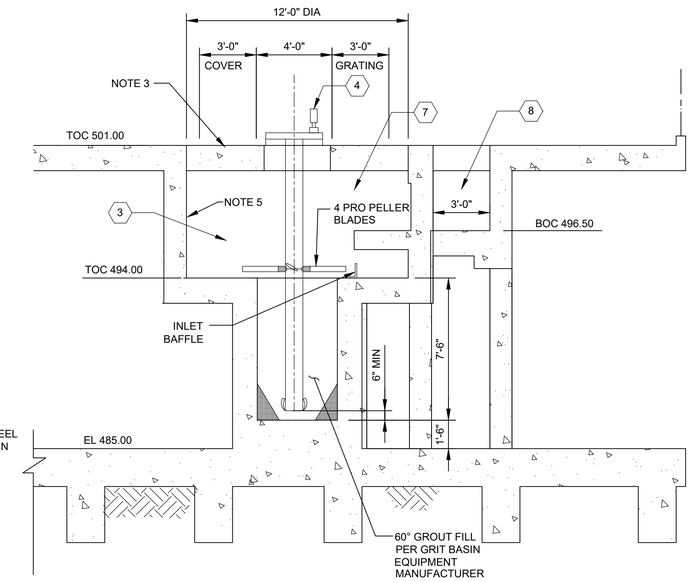

C SECTION
20M01 SCALE: 1/4"=1'-0"
FILE: 10976A1020S307.DWG

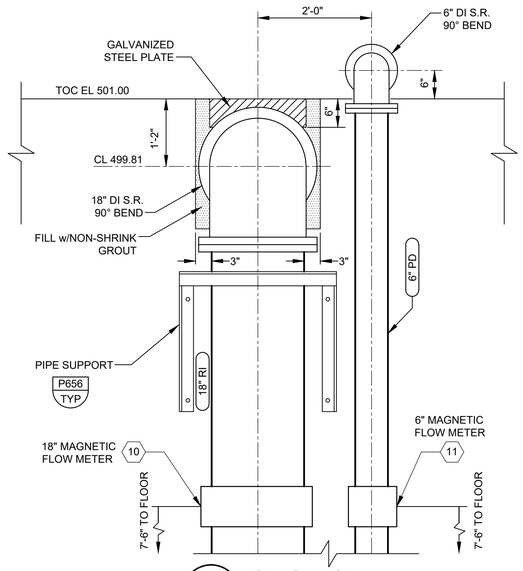

D SECTION
20M01 SCALE: 3/4"=1'-0"
FILE:

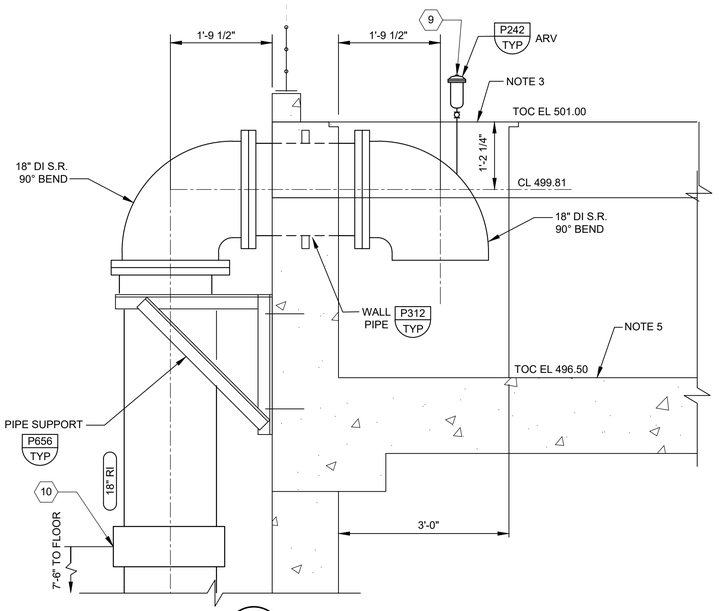

1 DETAIL
20M01 SCALE: 3/4"=1'-0"
FILE: 10976A1020S302.DWG

X	EQUIPMENT TAGS	
1	BAR SCREEN 1	HW-SCREEN-01
2	GRIT WASHER	HW-GRITWASHER-01
3	VORTEX GRIT CHAMBER	HW-GRITBASIN-01
4	VORTEX GRIT CHAMBER EQUIPMENT	HW-GRITMECH-01
5	FLOW SPLIT TO AERATION BASINS	HW-FLOWBOX-01
6	PLUG VALVE ISOLATION AB 2	HW-FLB1-PV-02
7	GRIT CHANNEL	HW-GRITBASIN-01
8	GRIT BYPASS CHANNEL	HW-GRITBASIN-02
9	AIR RELEASE VALVE	HW-YAPI1-ARV-01
10	RAW INFLUENT FLOW METER	HW-YAPI1-FIT-01
11	PUMPED DRAINAGE FLOW METER	HW-YAPI1-FIT-02

NOTES:

1. CONTRACTOR TO FIELD VERIFY AND ADJUST THE CENTERLINE OF THE SCREW CONVEYOR AND SCREEN DISCHARGE AS NEEDED BASED ON THE ACTUAL SIZE OF THE PROPOSED BAR SCREENS AND SCREW CONVEYOR, TO ALIGN WITH DISCHARGE PENETRATIONS TO FLOOR BELOW.
2. DIVERTER CHUTE ASSEMBLY FOR EMERGENCY USE TO BE PROVIDED BY MANUFACTURER TO DIVERT SCREENINGS OVER THE SCREENINGS CONVEYOR AND INTO A TEMPORARY RECEPTACLE. REFER TO SPECIFICATION 11327 - MULTI-RAKE SCREENS.
3. COVER PLATE ON ALL CHANNELS AND OPEN BASINS. REFER TO STRUCTURAL DRAWINGS.
4. DIRECT DISCHARGE PIPE FROM AIR RELEASE VALVE TO CHANNEL.
5. THE WALLS AND FLOORS OF ALL CHANNELS AND BASINS THAT CONVEY WASTEWATER WITHIN THE HEADWORKS STRUCTURE SHALL BE COATED WITH HYBRID POLYURETHANE (POL-C-I-BSE) AS SPECIFIED IN SPECIFICATION 09960.

THIS CONFORMED DOCUMENT IS RELEASED FOR THE CONVENIENCE OF THE CONTRACTOR UNDER THE AUTHORITY OF:

CASEY G. WAUTERS, P.E. 11-01-22
TX LIC NO. 93889 DATE

SEE DISCLAIMER FOR LIMITATIONS OF USE.

CONTRACT DOCUMENTS DATED JUNE 10, 2022, AS PART OF THE BIDDING DOCUMENTS (DRAWINGS AND SPECIFICATIONS) AND SUBSEQUENTLY ISSUED ADDENDA HAVE BEEN MERGED INTO ONE CONFORMING SET OF DOCUMENTS FOR THE CONVENIENCE OF THE CONTRACTOR. IF INCONSISTENCIES OR AMBIGUITIES BETWEEN "CONFORMED" DOCUMENTS AND CONTRACT DOCUMENTS ARE FOUND, THE CONTRACT DOCUMENTS SHALL GOVERN.

REV	DATE	BY	DESCRIPTION
			CONFORMED DOCUMENTS

DESIGNED RL/CW
DRAWN AW
CHECKED SGE
DATE FEBRUARY 2022

** ORIGINAL SEALED BY CASEY G. WAUTERS, P.E. 2/28/2022 TX PE 93889 **

AECOM TECHNICAL SERVICES INC.
13640 BRIARWICK DRIVE, SUITE 200
AUSTIN, TEXAS 78729
WWW.AECOM.COM
TBPE REG. NO. F-3580

carollo
TBPE No. F-882

CITY OF AUSTIN
FOUNDED 1839

CITY OF AUSTIN
WILD HORSE RANCH WWTP EXPANSION
MECHANICAL
HEADWORKS SECTION
(SHEET 1 OF 4)

VERIFY SCALES
BAR IS ONE INCH ON ORIGINAL DRAWING
0 1"
IF NOT ONE INCH ON THIS SHEET, ADJUST SCALES ACCORDINGLY

JOB NO. 10976A.10
DRAWING NO. 20M03
SHEET NO. 404 OF 464

LAST SAVED BY:

PROJECT NO. 9585A10 FILE NAME:

X	EQUIPMENT TAGS	
1	SCREENINGS WASH PRESS	HW-COMPACTOR-01
2	SCREENINGS CONVEYOR	HW-CONVEYOR-01
3	MULTI-RAKE BAR SCREEN 1	HW-SCREEN-01
4	MULTI-RAKE BAR SCREEN 2	HW-SCREEN-02

NOTES:

1. CONTRACTOR TO FIELD VERIFY AND ADJUST THE CENTERLINE OF THE SCREW CONVEYOR AND SCREEN DISCHARGE AS NEEDED BASED ON THE ACTUAL SIZE OF THE PROPOSED BAR SCREENS AND SCREW CONVEYOR, TO ALIGN WITH DISCHARGE PENETRATIONS TO FLOOR BELOW.
2. RAISED CURB AROUND 22" x 16" FLOOR OPENING. REFER TO STRUCTURAL DRAWINGS. CONTRACTOR SHALL CONFIRM OPENING SIZE AND LOCATION WITH SCREW CONVEYOR MANUFACTURER FOR DISCHARGE CHUTE.
3. COVER PLATE ON ALL CHANNELS AND OPEN BASINS. REFER TO STRUCTURAL DRAWINGS.
4. CONTRACTOR TO PROVIDE GREENWOOD POLYETHYLENE 96-GALLON WHEELED TRASH CART, OR APPROVED EQUAL. TRASH CART TO BE 30"WIDE x 36"LONG x 43.5"HIGH.
5. CONTRACTOR SHALL COORDINATE WITH SCREENINGS CONVEYOR MANUFACTURER FOR QUANTITY AND SPACING OF SUPPORT LEGS TO AVOID CHANNEL OPENINGS AND DISCHARGE CHUTES.
6. THE WALLS AND FLOORS OF ALL CHANNELS AND BASINS THAT CONVEY WASTEWATER WITHIN THE HEADWORKS STRUCTURE SHALL BE COATED WITH HYBRID POLYURETHANE (POL-C-I-BSE) AS SPECIFIED IN SPECIFICATION 09960.

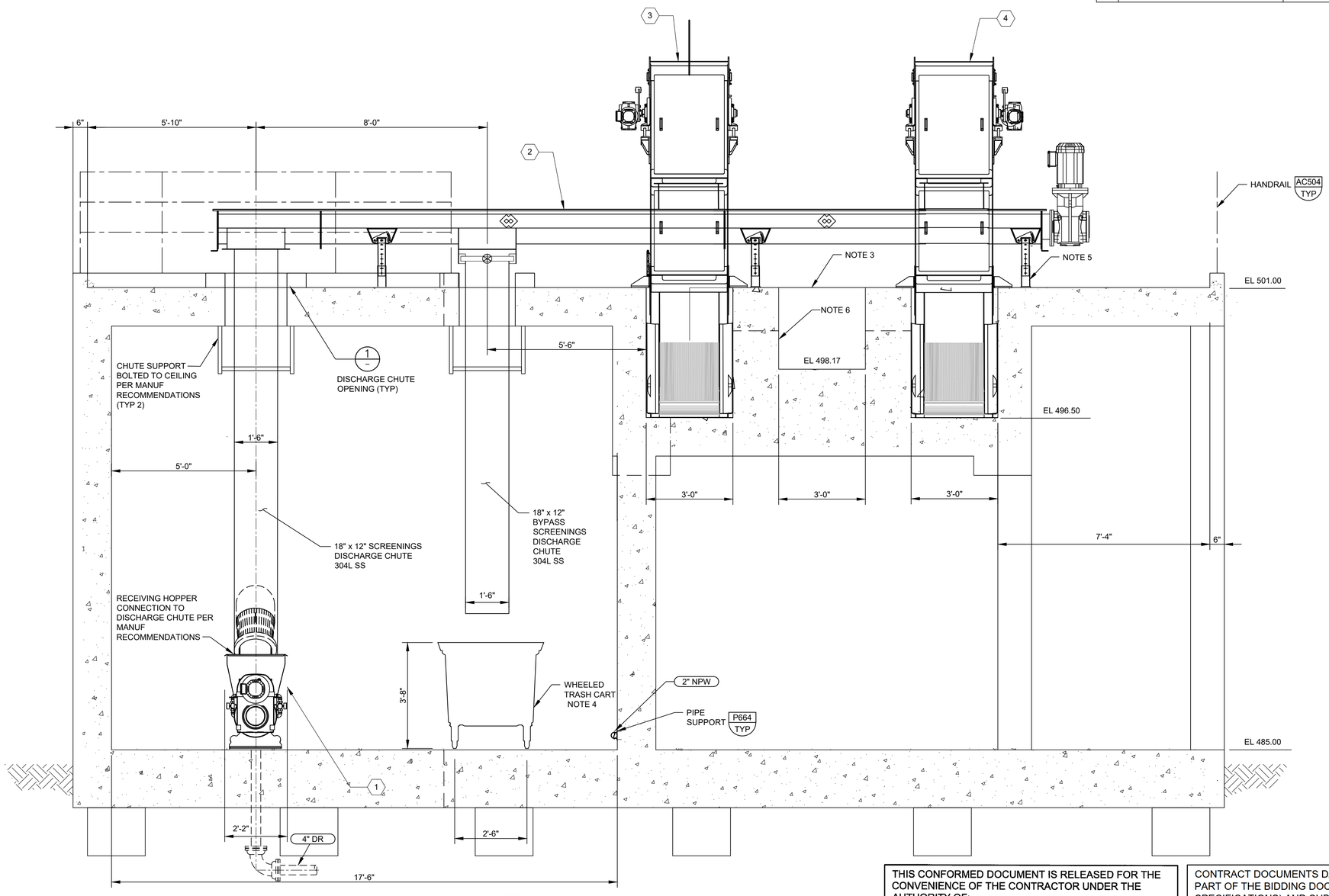

B 20M01 SECTION
SCALE: 1/2"=1'-0"
FILE: 10976A1020S305.DWG

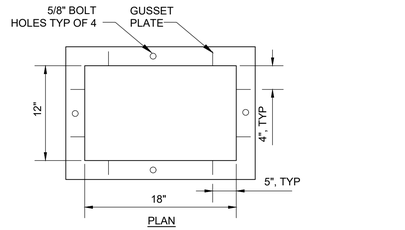

PLAN

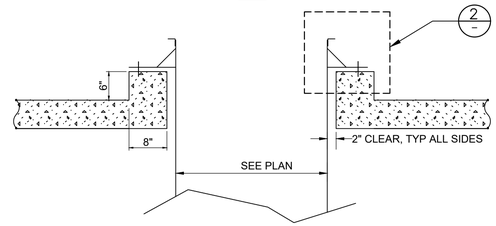

SECTION

1 - DETAIL
SCALE: NTS
FILE:

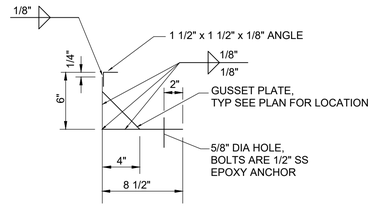

NOTE:
ALL METALS ARE 316 SS PLATE MIN 3/16" THICK.

2 - DETAIL
SCALE: NTS
FILE:

THIS CONFORMED DOCUMENT IS RELEASED FOR THE CONVENIENCE OF THE CONTRACTOR UNDER THE AUTHORITY OF:

CASEY G. WAUTERS, P.E. — 11-01-22
TX LIC NO. 93889 — DATE

SEE DISCLAIMER FOR LIMITATIONS OF USE.

CONTRACT DOCUMENTS DATED JUNE 10, 2022, AS PART OF THE BIDDING DOCUMENTS (DRAWINGS AND SPECIFICATIONS) AND SUBSEQUENTLY ISSUED ADDENDA HAVE BEEN MERGED INTO ONE CONFORMING SET OF DOCUMENTS FOR THE CONVENIENCE OF THE CONTRACTOR. IF INCONSISTENCIES OR AMBIGUITIES BETWEEN "CONFORMED" DOCUMENTS AND CONTRACT DOCUMENTS ARE FOUND, THE CONTRACT DOCUMENTS SHALL GOVERN.

REV	DATE	BY	DESCRIPTION
			CONFORMED DOCUMENTS

DESIGNED RL/CW
DRAWN AW
CHECKED SGE
DATE FEBRUARY 2022

**
ORIGINAL
SEALED BY
CASEY G. WAUTERS, P.E.
2/28/2022
TX PE 93889
**

AECOM TECHNICAL SERVICES INC.
13640 BRIARWICK DRIVE, SUITE 200
AUSTIN, TEXAS 78729
WWW.AECOM.COM
TBPE REG. NO. F-3580

carollo
TBPE No. F-882

CITY OF AUSTIN
FOUNDED 1839
CITY OF AUSTIN

CITY OF AUSTIN
WILD HORSE RANCH WWTP EXPANSION
MECHANICAL
HEADWORKS SECTION (SHEET 2 OF 4)

VERIFY SCALES
BAR IS ONE INCH ON ORIGINAL DRAWING
0 — 1"
IF NOT ONE INCH ON THIS SHEET, ADJUST SCALES ACCORDINGLY

JOB NO. 10976A.10
DRAWING NO. 20M04
SHEET NO. 405 OF 464

LAST SAVED BY:

PROJECT NO. 9585A10
FILE NAME:

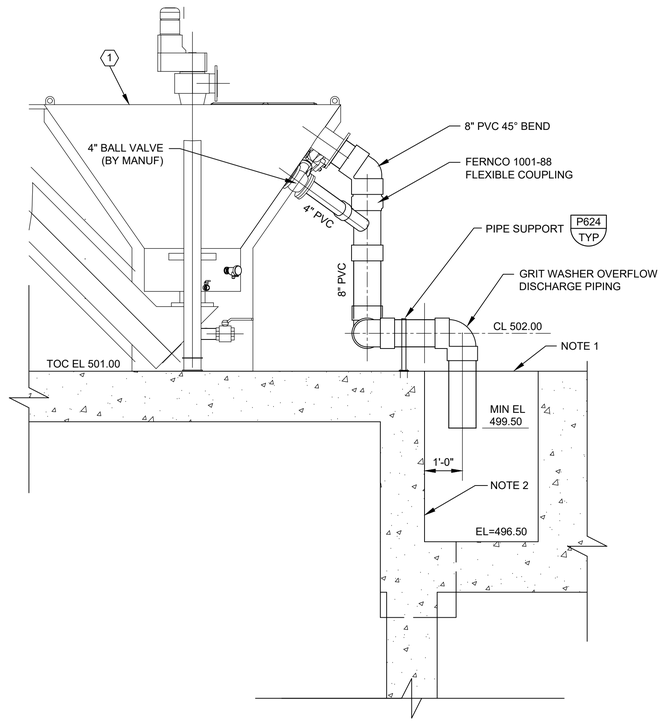

E SECTION
20M01
SCALE: 1/2"=1'-0"
FILE: 10976A1020S305.DWG

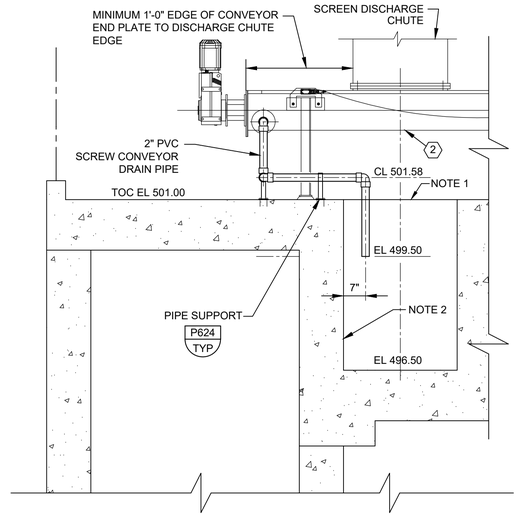

F SECTION
20M01
SCALE: 1/2"=1'-0"
FILE: 10976A1020S305.DWG

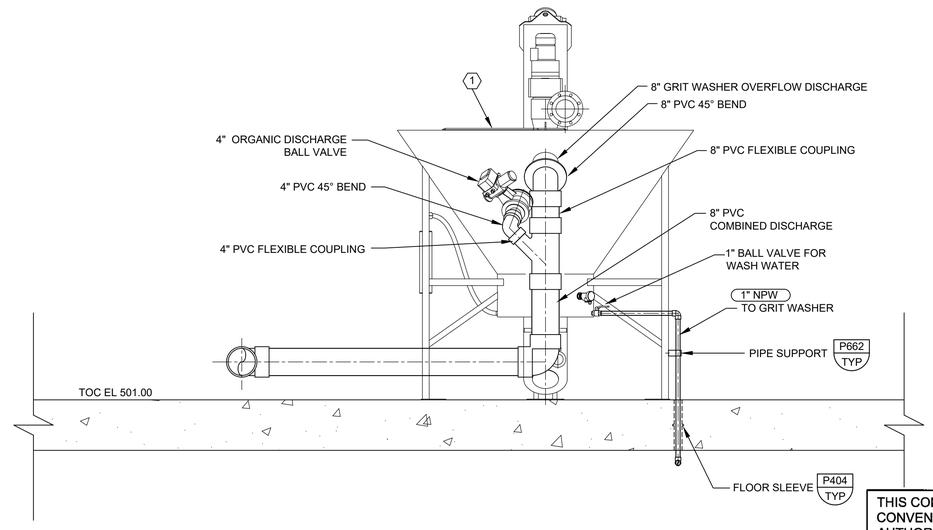

G SECTION
20M01
SCALE: 1/2"=1'-0"
FILE: 10976A1020S303.DWG

X	EQUIPMENT TAGS	
1	GRIT WASHER	HW-GRITWASHER-01
2	SCREENINGS CONVEYOR	HW-CONVEYOR-01

NOTES:

1. COVER PLATE ON ALL CHANNELS AND OPEN BASINS. REFER TO STRUCTURAL DRAWINGS.
2. THE WALLS AND FLOORS OF ALL CHANNELS AND BASINS THAT CONVEY WASTEWATER WITHIN THE HEADWORKS STRUCTURE SHALL BE COATED WITH HYBRID POLYURETHANE (POL-C-I-BSE) AS SPECIFIED IN SPECIFICATION 09960.

THIS CONFORMED DOCUMENT IS RELEASED FOR THE CONVENIENCE OF THE CONTRACTOR UNDER THE AUTHORITY OF:

CASEY G. WAUTERS, P.E. 11-01-22
TX LIC NO. 93889 DATE

SEE DISCLAIMER FOR LIMITATIONS OF USE.

CONTRACT DOCUMENTS DATED JUNE 10, 2022, AS PART OF THE BIDDING DOCUMENTS (DRAWINGS AND SPECIFICATIONS) AND SUBSEQUENTLY ISSUED ADDENDA HAVE BEEN MERGED INTO ONE CONFORMING SET OF DOCUMENTS FOR THE CONVENIENCE OF THE CONTRACTOR. IF INCONSISTENCIES OR AMBIGUITIES BETWEEN "CONFORMED" DOCUMENTS AND CONTRACT DOCUMENTS ARE FOUND, THE CONTRACT DOCUMENTS SHALL GOVERN.

REV	DATE	BY	DESCRIPTION
			CONFORMED DOCUMENTS

DESIGNED RL/CW
DRAWN AW
CHECKED SGE
DATE FEBRUARY 2022

**
ORIGINAL
SEALED BY
CASEY G. WAUTERS, P.E.
2/28/2022
TX PE 93889
**

AECOM TECHNICAL SERVICES INC.
13640 BRIARWICK DRIVE, SUITE 200
AUSTIN, TEXAS 78729
WWW.AECOM.COM
TBPE REG. NO. F-3580

TBPE No. F-882

CITY OF AUSTIN

CITY OF AUSTIN
WILD HORSE RANCH WWTP EXPANSION
MECHANICAL
HEADWORKS SECTION
(SHEET 3 OF 4)

VERIFY SCALES
BAR IS ONE INCH ON ORIGINAL DRAWING
0 1"
IF NOT ONE INCH ON THIS SHEET, ADJUST SCALES ACCORDINGLY

JOB NO. 10976A.10
DRAWING NO. 20M05
SHEET NO. 406 OF 464

LAST SAVED BY:

X	EQUIPMENT TAGS	
1	SCREENINGS WASH PRESS	HW-COMPACTOR-01
2	GRIT PUMP	HW-GRITPUMP-01
3	3" CHECK VALVE	HW-GPUI-CV-01
1	3" PLUG VALVE	HW-GPUI-PV-01

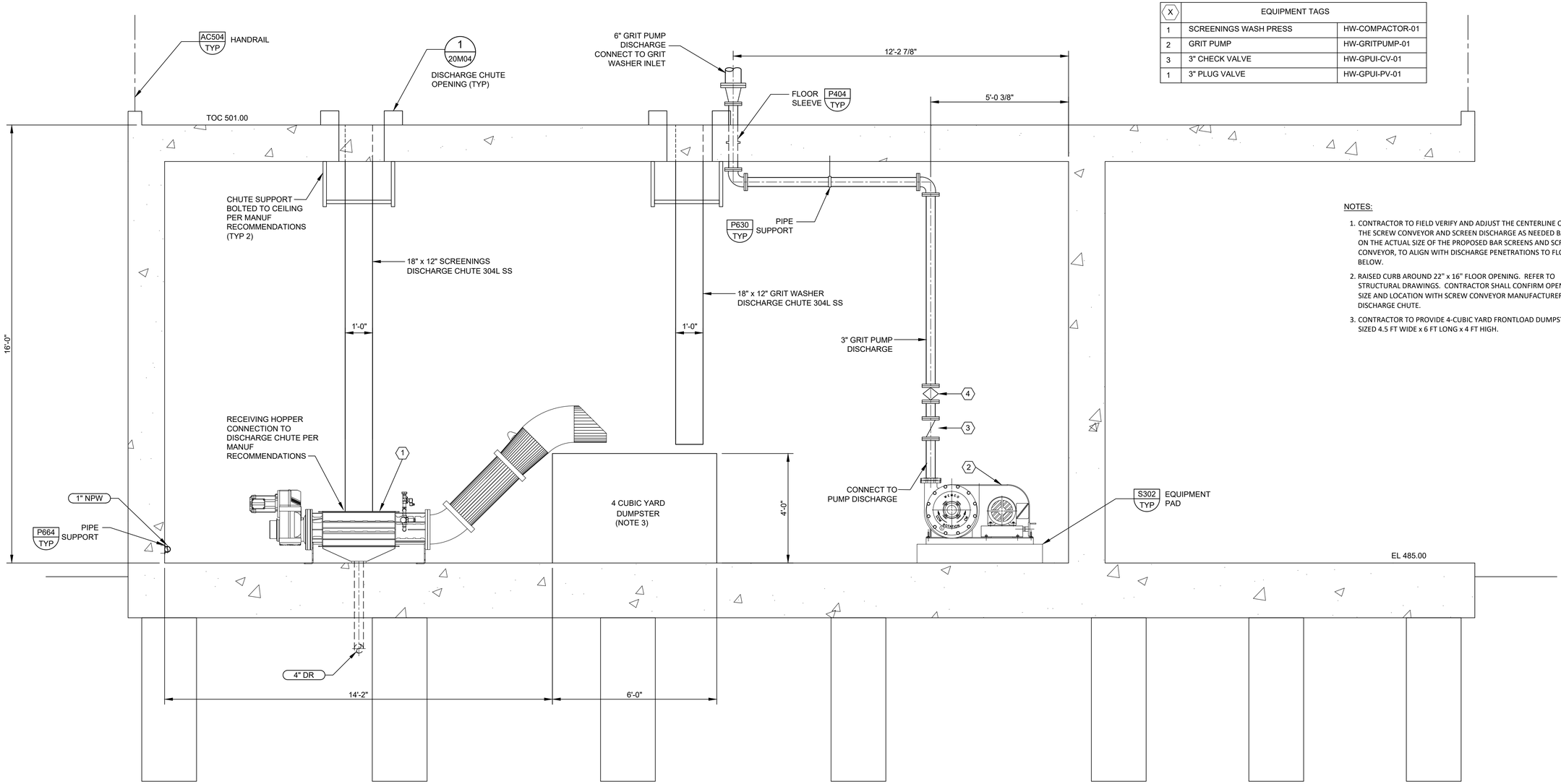

A 20M02 SECTION
SCALE: 1/2"=1'-0"
FILE: 10976A1020S303.DWG

NOTES:

1. CONTRACTOR TO FIELD VERIFY AND ADJUST THE CENTERLINE OF THE SCREW CONVEYOR AND SCREEN DISCHARGE AS NEEDED BASED ON THE ACTUAL SIZE OF THE PROPOSED BAR SCREENS AND SCREW CONVEYOR, TO ALIGN WITH DISCHARGE PENETRATIONS TO FLOOR BELOW.
2. RAISED CURB AROUND 22" x 16" FLOOR OPENING. REFER TO STRUCTURAL DRAWINGS. CONTRACTOR SHALL CONFIRM OPENING SIZE AND LOCATION WITH SCREW CONVEYOR MANUFACTURER FOR DISCHARGE CHUTE.
3. CONTRACTOR TO PROVIDE 4-CUBIC YARD FRONTLOAD DUMPSTER, SIZED 4.5 FT WIDE x 6 FT LONG x 4 FT HIGH.

THIS CONFORMED DOCUMENT IS RELEASED FOR THE CONVENIENCE OF THE CONTRACTOR UNDER THE AUTHORITY OF:

CASEY G. WAUTERS, P.E.
TX LIC NO. 93889

11-01-22
DATE

SEE DISCLAIMER FOR LIMITATIONS OF USE.

CONTRACT DOCUMENTS DATED JUNE 10, 2022, AS PART OF THE BIDDING DOCUMENTS (DRAWINGS AND SPECIFICATIONS) AND SUBSEQUENTLY ISSUED ADDENDA HAVE BEEN MERGED INTO ONE CONFORMING SET OF DOCUMENTS FOR THE CONVENIENCE OF THE CONTRACTOR. IF INCONSISTENCIES OR AMBIGUITIES BETWEEN "CONFORMED" DOCUMENTS AND CONTRACT DOCUMENTS ARE FOUND, THE CONTRACT DOCUMENTS SHALL GOVERN.

REV	DATE	BY	DESCRIPTION
			CONFORMED DOCUMENTS

DESIGNED RL/CW
DRAWN AW
CHECKED SGE
DATE FEBRUARY 2022

**
ORIGINAL
SEALED BY
CASEY G. WAUTERS, P.E.
2/28/2022
TX PE 93889
**

AECOM TECHNICAL SERVICES INC.
13640 BRIARWICK DRIVE, SUITE 200
AUSTIN, TEXAS 78729
WWW.AECOM.COM
TBPE REG. NO. F-3580

carollo
TBPE No. F-882

CITY OF AUSTIN

CITY OF AUSTIN
WILD HORSE RANCH WWTP EXPANSION
MECHANICAL
HEADWORKS SECTION
(SHEET 4 OF 4)

VERIFY SCALES
BAR IS ONE INCH ON ORIGINAL DRAWING
0 1"
IF NOT ONE INCH ON THIS SHEET, ADJUST SCALES ACCORDINGLY

JOB NO. 10976A.10
DRAWING NO. 20M06
SHEET NO. 407 OF 464

LAST SAVED BY:

PROJECT NO. 9585A10 FILE NAME:

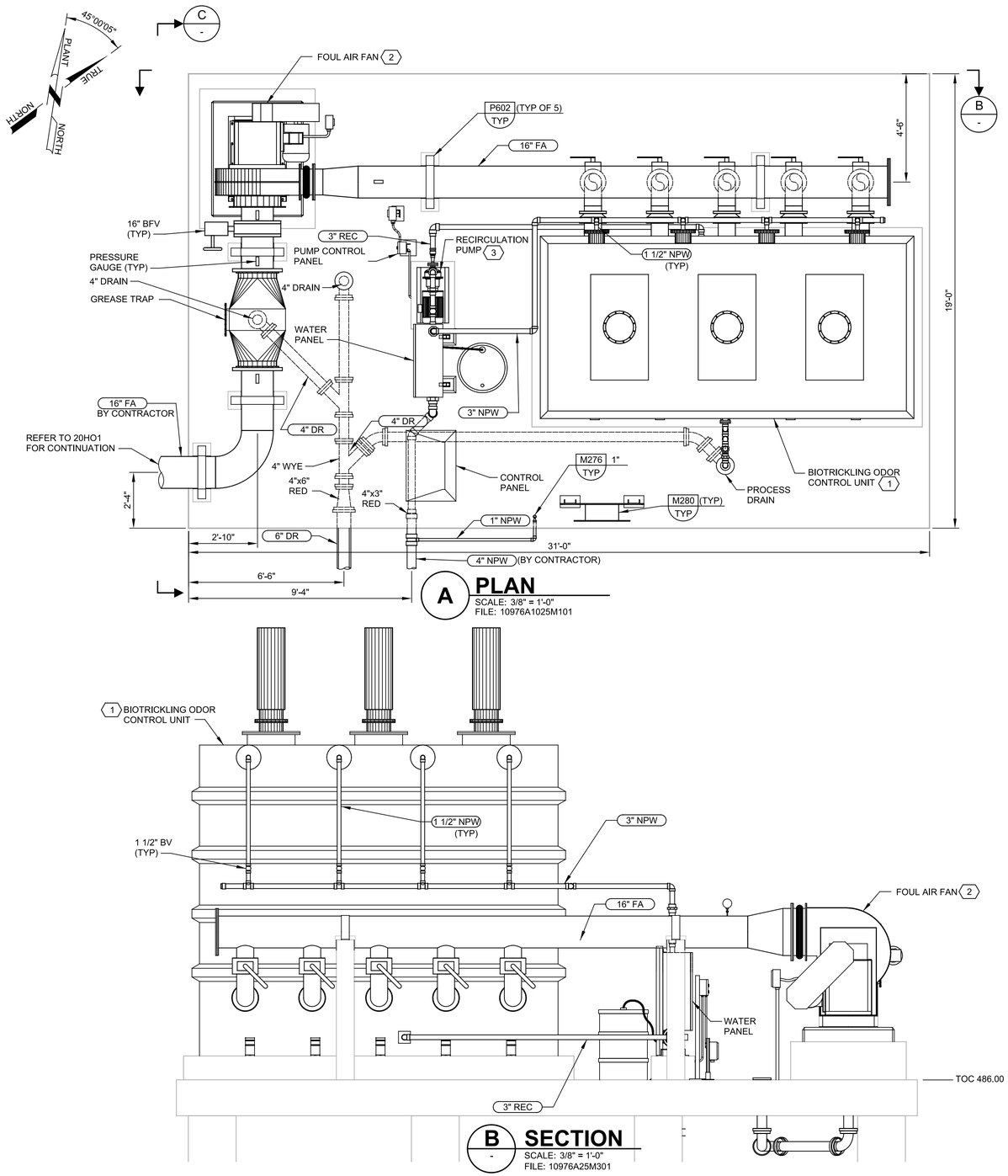

A PLAN

SCALE: 3/8" = 1'-0"
FILE: 10976A1025M101

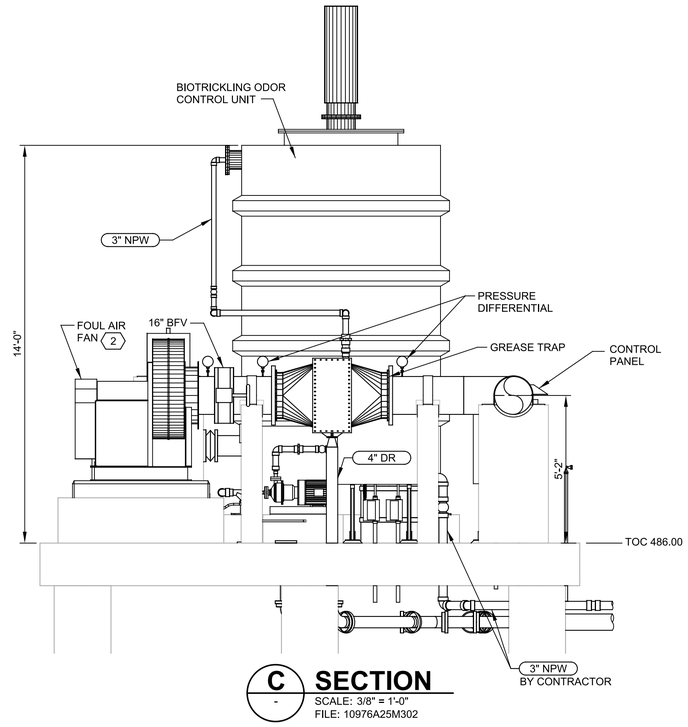

C SECTION

SCALE: 3/8" = 1'-0"
FILE: 10976A25M302

B SECTION

SCALE: 3/8" = 1'-0"
FILE: 10976A25M301

GENERAL NOTES:

1. FOR GENERAL NOTES, REFER TO DRAWING 00G06. FOR MECHANICAL LEGEND AND SYMBOLS, REFER TO DRAWING 00GM01.
2. REFER TO CIVIL DRAWINGS FOR FOUL AIR PIPING CONTINUATION AND HEADWORKS MECHANICAL DRAWINGS FOR ASSOCIATED HVAC.

KEY NOTES:

1 ODOR CONTROL EQUIPMENT AND PANELS PROVIDED BY MANUFACTURER AS PART OF ODOR CONTROL PACKAGE PER SPEC SECTION 11395A.

2 REFER TO CIVIL DRAWINGS FOR CONTINUATION OF PIPING.

3 CONCRETE ENCASE PIPES UNDER SLAB PER TYPICAL DETAIL MP142.

X EQUIPMENT TAGS:

1	ODOR CONTROL UNIT	HW-ODORCONTROL-01
2	FOUL AIR FAN	HW-BLOWER-01
3	RECIRCULATION PUMP	HW-RECYCLEPUMP-01

THIS CONFORMED DOCUMENT IS RELEASED FOR THE CONVENIENCE OF THE CONTRACTOR UNDER THE AUTHORITY OF:

DANNY M HURTADO, P.E.
TX LIC NO. 104266

11-01-22
DATE

SEE DISCLAIMER FOR LIMITATIONS OF USE.

CONTRACT DOCUMENTS DATED JUNE 10, 2022, AS PART OF THE BIDDING DOCUMENTS (DRAWINGS AND SPECIFICATIONS) AND SUBSEQUENTLY ISSUED ADDENDA HAVE BEEN MERGED INTO ONE CONFORMING SET OF DOCUMENTS FOR THE CONVENIENCE OF THE CONTRACTOR. IF INCONSISTENCIES OR AMBIGUITIES BETWEEN "CONFORMED" DOCUMENTS AND CONTRACT DOCUMENTS ARE FOUND, THE CONTRACT DOCUMENTS SHALL GOVERN.

REV	DATE	BY	DESCRIPTION
			CONFORMED DOCUMENTS

DESIGNED SMM
DRAWN LGD
CHECKED DMH
DATE NOVEMBER 2022

** ORIGINAL SEALED BY DANNY M. HURTADO 06-10-22 TX PE 104266 **

carollo®
TBPELS No. F-882

CITY OF AUSTIN
FOUNDED 1839

CITY OF AUSTIN

CITY OF AUSTIN
WILD HORSE RANCH WWTP EXPANSION
MECHANICAL
HEADWORKS ODOR CONTROL PLAN AND SECTIONS

VERIFY SCALES
BAR IS ONE INCH ON ORIGINAL DRAWING
0 1"
IF NOT ONE INCH ON THIS SHEET, ADJUST SCALES ACCORDINGLY

JOB NO. 10976A.00
DRAWING NO. 25M01
SHEET NO. 408 OF 464

PROJECT NO. 10976A10 FILE NAME: 10976A1025M001.dgn

Plot Date: 11-OCT-2022 9:13:10 AM
User: LDietzel
PlotScale: 1:1
DesignScript: Carollo_Std_Pen_v0905.pen
ColorTable: gshade.ctb
Model: Layout1
LAST SAVED BY: ldietzel

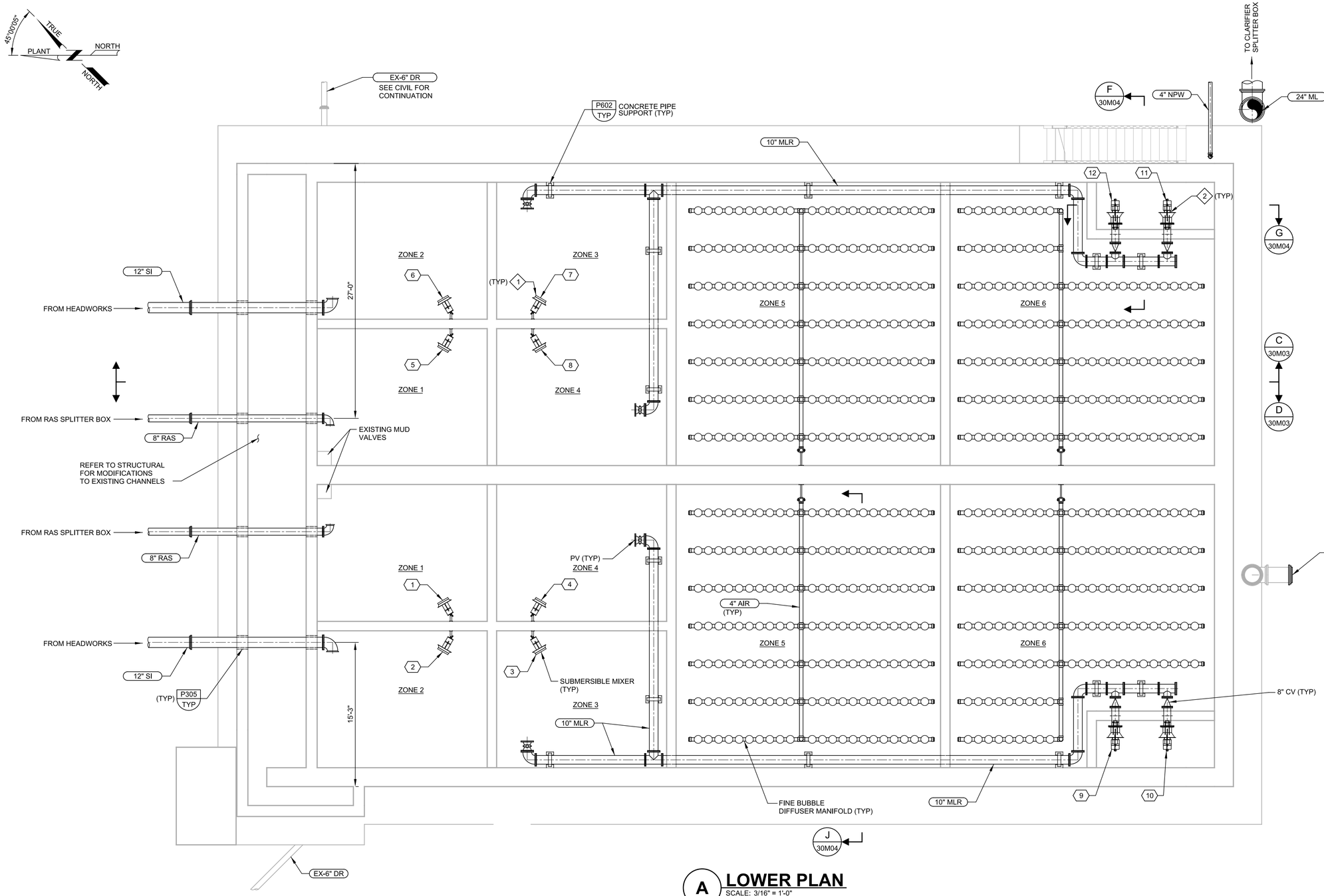

A LOWER PLAN

SCALE: 3/16" = 1'-0"
FILE: 10976A11030M110

GENERAL NOTES:

1. CONTRACTOR SHALL FIELD VERIFY EXISTING CONDITIONS PRIOR TO STARTING WORK.
2. REFER TO SPECIFICATION 01140 - WORK RESTRICTIONS FOR SHUTDOWN REQUIREMENTS.
3. DIFFUSER LAYOUT SHOWN IS ILLUSTRATIVE. REFER TO SPECIFICATIONS FOR EXACT SIZING REQUIREMENTS. COARSE BUBBLE DIFFUSER PER SPECIFICATION 11377A AND FINE BUBBLE DIFFUSER PER SPECIFICATION 11378A.

KEY NOTES:

1 SUBMERSIBLE MIXERS PER SPECIFICATION 11317. MIXER ANGLE AND DEPTH PER MANUFACTURER RECOMMENDATION.

2 MIXED LIQUOR PROPELLER PUMPS PER SPECIFICATION 11312X.

X EQUIPMENT TAGS:

1	AB 1 MIXER 1	AB-AB1-MIX-01
2	AB 1 MIXER 2	AB-AB1-MIX-02
3	AB 1 MIXER 3	AB-AB1-MIX-03
4	AB 1 MIXER 4	AB-AB1-MIX-04
5	AB 2 MIXER 1	AB-AB2-MIX-01
6	AB 2 MIXER 2	AB-AB2-MIX-02
7	AB 2 MIXER 3	AB-AB2-MIX-03
8	AB 2 MIXER 4	AB-AB2-MIX-04
9	AB 1 MIXED LIQUOR RECYCLE (MLR) PUMP 1	AB-RECYCLEPUMP-01
10	AB 1 MLR PUMP 2	AB-RECYCLEPUMP-02
11	AB 2 MLR PUMP 1	AB-RECYCLEPUMP-03
12	AB 2 MLR PUMP 2	AB-RECYCLEPUMP-04

THIS CONFORMED DOCUMENT IS RELEASED FOR THE CONVENIENCE OF THE CONTRACTOR UNDER THE AUTHORITY OF:

DANNY M HURTADO, P.E.
TX LIC NO. 104266

11-01-22
DATE

SEE DISCLAIMER FOR LIMITATIONS OF USE.

CONTRACT DOCUMENTS DATED JUNE 10, 2022, AS PART OF THE BIDDING DOCUMENTS (DRAWINGS AND SPECIFICATIONS) AND SUBSEQUENTLY ISSUED ADDENDA HAVE BEEN MERGED INTO ONE CONFORMING SET OF DOCUMENTS FOR THE CONVENIENCE OF THE CONTRACTOR. IF INCONSISTENCIES OR AMBIGUITIES BETWEEN "CONFORMED" DOCUMENTS AND CONTRACT DOCUMENTS ARE FOUND, THE CONTRACT DOCUMENTS SHALL GOVERN.

REV	DATE	BY	DESCRIPTION
			CONFORMED DOCUMENTS

DESIGNED SMM
DRAWN TBL
CHECKED DMH
DATE NOVEMBER 2022

** ORIGINAL SEALED BY DANNY M. HURTADO 06-10-22 TX PE 104266 **

carollo®
TBPELS No. F-882

CITY OF AUSTIN
FOUNDED 1839
CITY OF AUSTIN

CITY OF AUSTIN
WILD HORSE RANCH WWTP EXPANSION
MECHANICAL
AERATION BASINS 1 & 2 MODIFICATIONS
LOWER PLAN

VERIFY SCALES
BAR IS ONE INCH ON ORIGINAL DRAWING
0 1"
IF NOT ONE INCH ON THIS SHEET, ADJUST SCALES ACCORDINGLY

JOB NO. 10976A.00
DRAWING NO. 30M01
SHEET NO. 409 OF 464

PROJECT NO. 10976A10 FILE NAME: 10976A1030M001.dgn

Plot Date: 11-OCT-2022 8:02:34 AM
User: LDietzel
PlotScale: 1:1
DesignScript: Carollo_Std_Pen_v0905.pen
ColorTable: gshade.ctb
Model: Layout1
LAST SAVED BY: ldietzel

THIS CONFORMED DOCUMENT IS RELEASED FOR THE CONVENIENCE OF THE CONTRACTOR UNDER THE AUTHORITY OF:

DANNY M HURTADO, P.E.
TX LIC NO. 104266

11-01-22
DATE

SEE DISCLAIMER FOR LIMITATIONS OF USE.

CONTRACT DOCUMENTS DATED JUNE 10, 2022, AS PART OF THE BIDDING DOCUMENTS (DRAWINGS AND SPECIFICATIONS) AND SUBSEQUENTLY ISSUED ADDENDA HAVE BEEN MERGED INTO ONE CONFORMING SET OF DOCUMENTS FOR THE CONVENIENCE OF THE CONTRACTOR. IF INCONSISTENCIES OR AMBIGUITIES BETWEEN "CONFORMED" DOCUMENTS AND CONTRACT DOCUMENTS ARE FOUND, THE CONTRACT DOCUMENTS SHALL GOVERN.

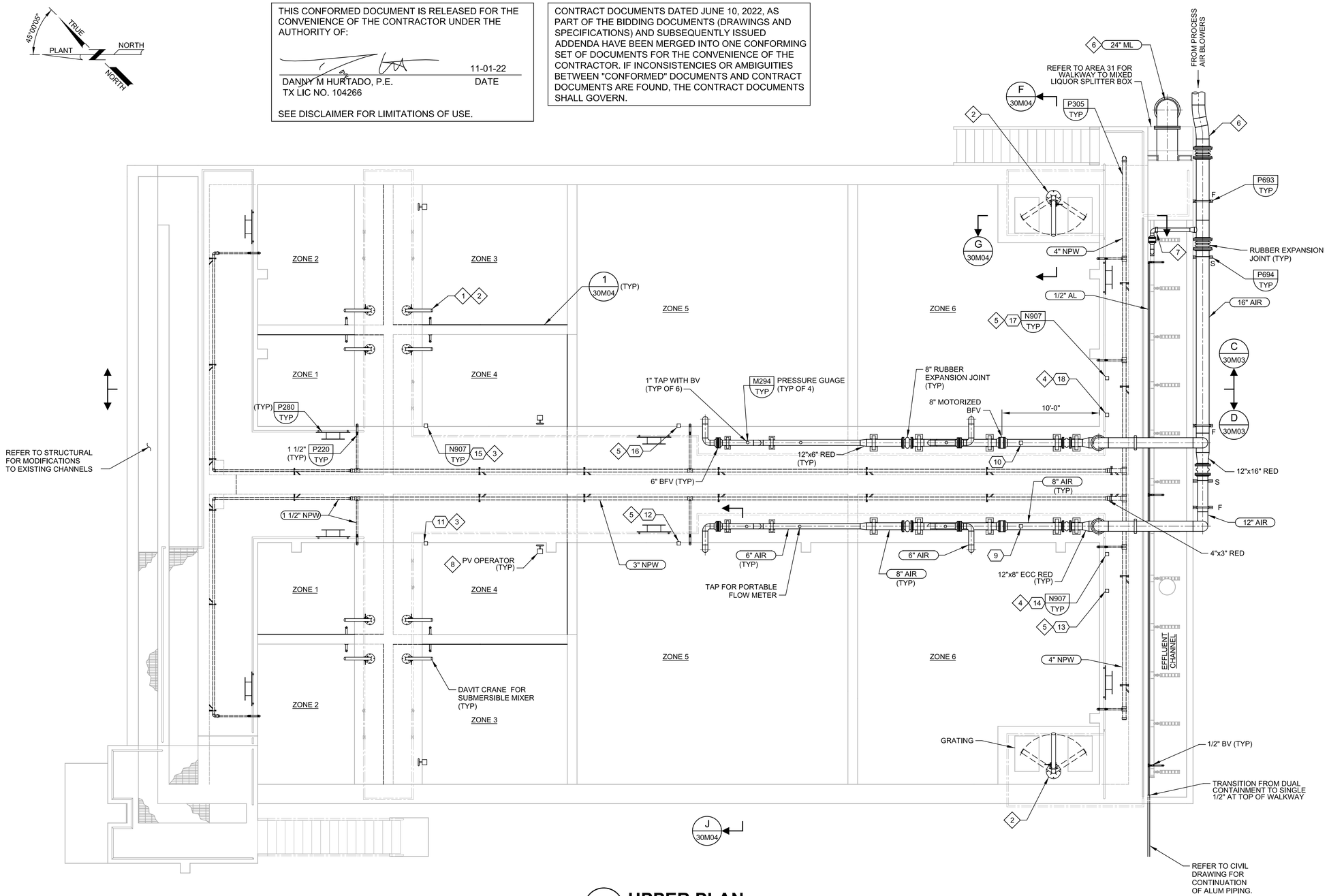

B UPPER PLAN

SCALE: 3/16" = 1'-0"
FILE: 10976A11030M101

GENERAL NOTES:

1. CONTRACTOR SHALL FIELD VERIFY EXISTING CONDITIONS PRIOR TO STARTING WORK.
2. REFER TO SPECIFICATION 01140 - WORK RESTRICTIONS FOR SHUTDOWN REQUIREMENTS.
3. DIFFUSER LAYOUT SHOWN IS ILLUSTRATIVE. REFER TO SPECIFICATIONS FOR EXACT SIZING REQUIREMENTS. COARSE BUBBLE DIFFUSER PER SPECIFICATION 11377A AND FINE BUBBLE DIFFUSER PER SPECIFICATION 11378A.
4. REFER TO SECTION 11375 FOR REQUIREMENTS ON DISSOLVED OXYGEN CONTROL SYSTEM.
5. PROVIDE ONE PORTABLE WASHDOWN MONITOR FOR AERATION BASINS 1&2. REFER TO SECTION 15120.

◇# KEY NOTES:

1 SUBMERSIBLE MIXER ANGLE AND DEPTH ON GUIDE RAIL PER MANUFACTURER RECOMMENDATION.

2 LOCATION OF DAVIT CRANES SHALL BE COORDINATED WITH ANOXIC MIXER AND MLR PUMP MANUFACTURERS TO ENSURE PROPER FUNCTIONALITY.

3 ORP PROBE PER SPECIFICATION SECTION 17502.

4 TOTAL SUSPENDED SOLIDS PROBE PER SPECIFICATION SECTION 17522.

5 DISSOLVED OXYGEN PROBE PER SPECIFICATION SECTION 17506.

6 COORDINATE ALIGNMENT OF ML AND AIR PIPING WITH PLACEMENT OF MIXED LIQUOR SPLITTER BOX.

7 INSTALL PRESSURE REGULATING ORIFICE PER SECTION 11377A.

8 ALL SUBMERGED PLUG VALVES SHALL BE PROVIDED WITH TORQUE TUBE AND GEAR OPERATOR MOUNTED AT WALKWAY.

◇X EQUIPMENT TAGS:

1	AB (AERATION BASIN) 1 MIXER 1	AB-AB1-MIX-01
2	AB 1 MIXER 2	AB-AB1-MIX-02
3	AB 1 MIXER 3	AB-AB1-MIX-03
4	AB 1 MIXER 4	AB-AB1-MIX-04
5	AB 2 MIXER 1	AB-AB2-MIX-01
6	AB 2 MIXER 2	AB-AB2-MIX-02
7	AB 2 MIXER 3	AB-AB2-MIX-03
8	AB 2 MIXER 4	AB-AB2-MIX-04
9	AB 1 AIR FLOW METER	AB-AB1-FIT-01
10	AB 2 AIR FLOW METER	AB-AB2-FIT-01
11	AB 1 ORP PROBE	AB-AB1-AIT-01
12	AB 1 ZONE 5 DO PROBE	AB-AB1-AIT-02
13	AB 1 ZONE 6 DO PROBE	AB-AB1-AIT-03
14	AB 1 TSS PROBE	AB-AB1-AIT-04
15	AB 2 ORP PROBE	AB-AB2-AIT-01
16	AB 2 ZONE 5 DO PROBE	AB-AB2-AIT-02
17	AB 2 ZONE 6 DO PROBE	AB-AB2-AIT-03
18	AB 2 TSS PROBE	AB-AB2-AIT-04

REV	DATE	BY	DESCRIPTION
			CONFORMED DOCUMENTS

DESIGNED SMM
DRAWN TBL
CHECKED DMH
DATE NOVEMBER 2022

** ORIGINAL SEALED BY DANNY M. HURTADO 06-10-22 TX PE 104266 **

carollo® TBPELS No. F-882

CITY OF AUSTIN — FOUNDED 1839

CITY OF AUSTIN

CITY OF AUSTIN
WILD HORSE RANCH WWTP EXPANSION
MECHANICAL
AERATION BASIN 1 & 2 MODIFICATIONS
UPPER PLAN

VERIFY SCALES
BAR IS ONE INCH ON ORIGINAL DRAWING
0 — 1"
IF NOT ONE INCH ON THIS SHEET, ADJUST SCALES ACCORDINGLY

JOB NO. 10976A.00
DRAWING NO. 30M02
SHEET NO. 410 OF 464

Plot Date: 11-OCT-2022 8:04:29 AM
User: LDietzel
DesignScript: Carollo_Std_Pen_v0905.pen
PlotScale: 1:1
ColorTable: gshade.ctb
Model: Layout1
LAST SAVED BY: ldietzel
PROJECT NO. 10976A10
FILE NAME: 10976A1030M002.dgn

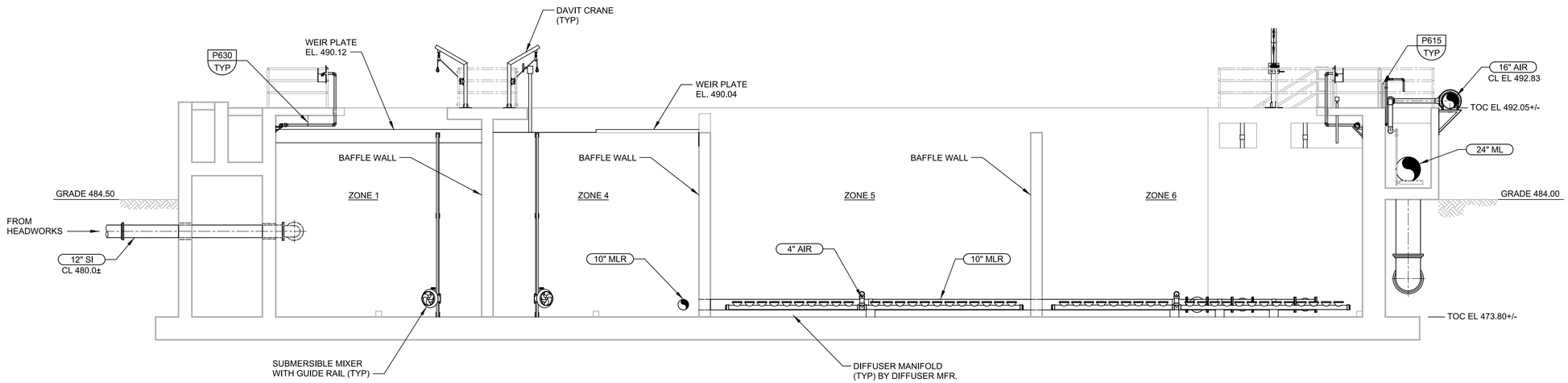

C SECTION

30M01

SCALE: 3/16" = 1'-0"
FILE: 10976A1030M301

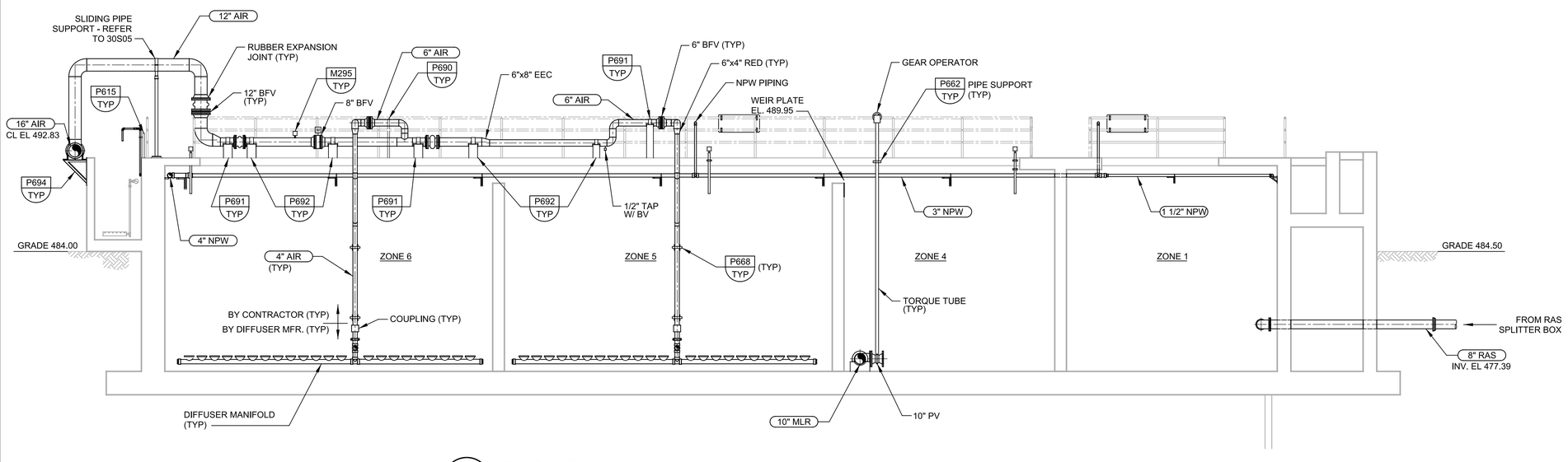

D SECTION

30M01

SCALE: 3/16" = 1'-0"
FILE: 10976A1030M302

THIS CONFORMED DOCUMENT IS RELEASED FOR THE CONVENIENCE OF THE CONTRACTOR UNDER THE AUTHORITY OF:

DANNY M HURTADO, P.E. — 11-01-22 DATE
TX LIC NO. 104266

SEE DISCLAIMER FOR LIMITATIONS OF USE.

CONTRACT DOCUMENTS DATED JUNE 10, 2022, AS PART OF THE BIDDING DOCUMENTS (DRAWINGS AND SPECIFICATIONS) AND SUBSEQUENTLY ISSUED ADDENDA HAVE BEEN MERGED INTO ONE CONFORMING SET OF DOCUMENTS FOR THE CONVENIENCE OF THE CONTRACTOR. IF INCONSISTENCIES OR AMBIGUITIES BETWEEN "CONFORMED" DOCUMENTS AND CONTRACT DOCUMENTS ARE FOUND, THE CONTRACT DOCUMENTS SHALL GOVERN.

REV	DATE	BY	DESCRIPTION
			CONFORMED DOCUMENTS

DESIGNED SMM
DRAWN TBL
CHECKED DMH
DATE NOVEMBER 2022

** ORIGINAL SEALED BY DANNY M. HURTADO 06-10-22 TX PE 104266 **

carollo®
TBPELS No. F-882

CITY OF AUSTIN
FOUNDED 1839

CITY OF AUSTIN

CITY OF AUSTIN
WILD HORSE RANCH WWTP EXPANSION
MECHANICAL
AERATION BASIN 1 & 2 MODIFICATIONS
SECTIONS 1

VERIFY SCALES
BAR IS ONE INCH ON ORIGINAL DRAWING
0 1"
IF NOT ONE INCH ON THIS SHEET, ADJUST SCALES ACCORDINGLY

JOB NO. 10976A.00
DRAWING NO. 30M03
SHEET NO. 411 OF 464

PROJECT NO. 10976A10 FILE NAME: 10976A1030M003.dgn

Plot Date: 11-OCT-2022 8:13:08 AM
User: LDietzel
PlotScale: 1:1
DesignScript: Carollo_Std_Pen_v0905.pen
ColorTable: gshade.ctb
Model: Layout1
LAST SAVED BY: ldietzel

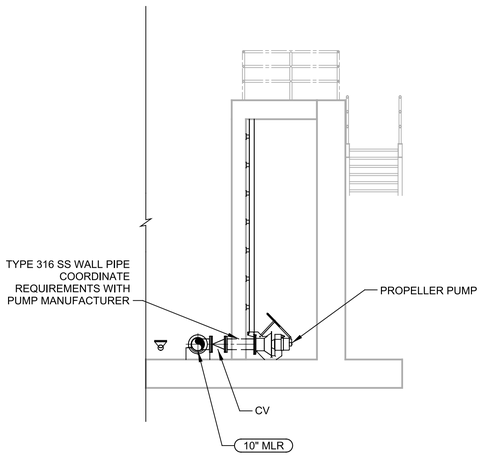

F SECTION
30M01
SCALE: 3/16" = 1'-0"
FILE: 10976A1030M304

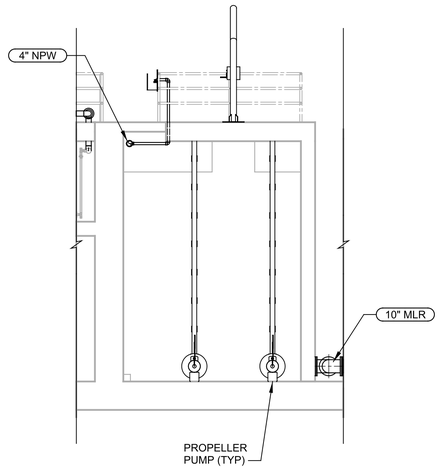

G SECTION
30M01
SCALE: 3/16" = 1'-0"
FILE: 10976A1030M306

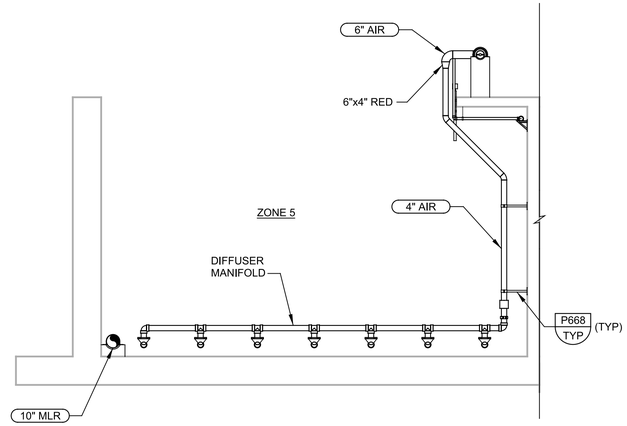

J SECTION
30M01
SCALE: 3/16" = 1'-0"
FILE: 10976A1030M305

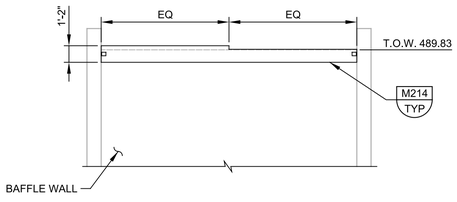

BAFFLE WALL WEIR PLATE ELEVATION				
BAFFLE LOCATION	BASIN 1 & 3		BASIN 2 & 4	
	HIGH SIDE	LOW SIDE	HIGH SIDE	LOW SIDE
ZONE 1 TO 2	490.12	490.12	490.12	490.12
ZONE 2 TO 3	490.12 (WEST)	489.87 (EAST)	490.12 (WEST)	489.87 (EAST)
ZONE 3 TO 4	490.04 (SOUTH)	489.87 (NORTH)	490.04 (SOUTH)	489.87 (NORTH)
ZONE 4 TO 5	489.95	489.95	489.95	489.95

1 TYPICAL PLATE DETAIL
30M02
SCALE: 3/16" = 1'-0"
FILE: 10976A1030M401

THIS CONFORMED DOCUMENT IS RELEASED FOR THE CONVENIENCE OF THE CONTRACTOR UNDER THE AUTHORITY OF:

11-01-22
DANNY M HURTADO, P.E. DATE
TX LIC NO. 104266

SEE DISCLAIMER FOR LIMITATIONS OF USE.

CONTRACT DOCUMENTS DATED JUNE 10, 2022, AS PART OF THE BIDDING DOCUMENTS (DRAWINGS AND SPECIFICATIONS) AND SUBSEQUENTLY ISSUED ADDENDA HAVE BEEN MERGED INTO ONE CONFORMING SET OF DOCUMENTS FOR THE CONVENIENCE OF THE CONTRACTOR. IF INCONSISTENCIES OR AMBIGUITIES BETWEEN "CONFORMED" DOCUMENTS AND CONTRACT DOCUMENTS ARE FOUND, THE CONTRACT DOCUMENTS SHALL GOVERN.

REV	DATE	BY	DESCRIPTION
			CONFORMED DOCUMENTS

DESIGNED SMM
DRAWN TBL
CHECKED DMH
DATE NOVEMBER 2022

** ORIGINAL SEALED BY DANNY M. HURTADO 06-10-22 TX PE 104266 **

carollo®
TBPELS No. F-882

CITY OF AUSTIN
FOUNDED 1839

CITY OF AUSTIN

CITY OF AUSTIN
WILD HORSE RANCH WWTP EXPANSION
MECHANICAL
AERATION BASINS 1 & 2 MODIFICATIONS
SECTIONS 2

VERIFY SCALES
BAR IS ONE INCH ON ORIGINAL DRAWING
0 1"
IF NOT ONE INCH ON THIS SHEET, ADJUST SCALES ACCORDINGLY

JOB NO. 10976A.00
DRAWING NO. 30M04
SHEET NO. 412 OF 464

PROJECT NO. 10976A10 FILE NAME: 10976A1030M004.dgn

Plot Date: 11-OCT-2022 8:15:06 AM
User: LDietzel
PlotScale: 1:1
DesignScript: Carollo_Std_Pen_v0905.pen
ColorTable: gshade.ctb
Model: Layout1
LAST SAVED BY: ldietzel

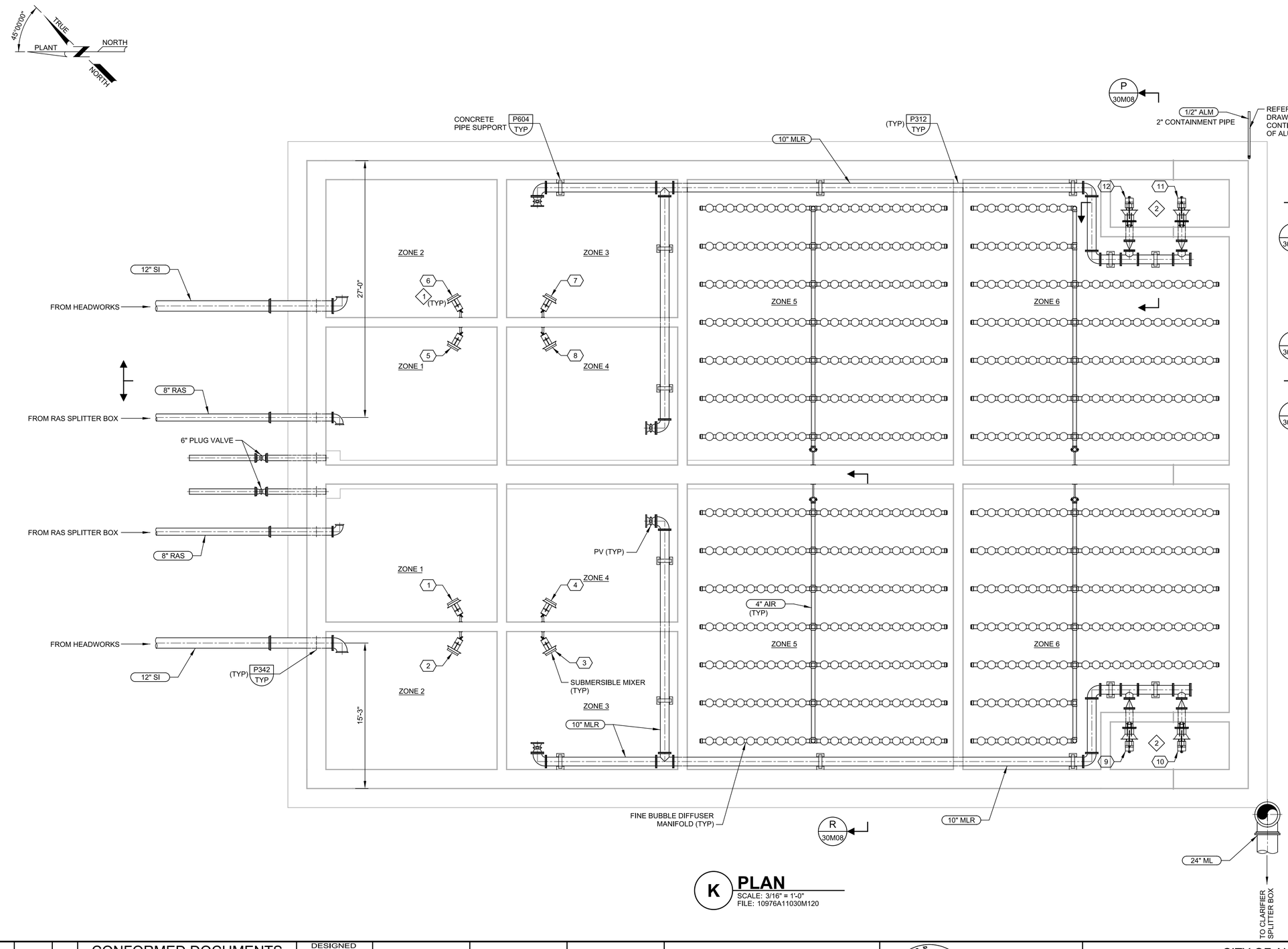

K PLAN

SCALE: 3/16" = 1'-0"
FILE: 10976A11030M120

GENERAL NOTES:

1. CONTRACTOR SHALL FIELD VERIFY EXISTING CONDITIONS PRIOR TO STARTING WORK.
2. REFER TO SPECIFICATION 01140 - WORK RESTRICTIONS FOR SHUTDOWN REQUIREMENTS.
3. DIFFUSER LAYOUT SHOWN IS ILLUSTRATIVE. REFER TO SPECIFICATIONS FOR EXACT SIZING REQUIREMENTS. COARSE BUBBLE DIFFUSER PER SPECIFICATION 11377A AND FINE BUBBLE DIFFUSER PER SPECIFICATION 11378A.

KEY NOTES:

1 SUBMERSIBLE MIXERS PER SPECIFICATION 11317. MIXER ANGLE AND DEPTH PER MANUFACTURER RECOMMENDATION.

2 MIXED LIQUOR PROPELLER PUMPS PER SPECIFICATION 11312X.

X EQUIPMENT TAGS:

1	AB 1 MIXER 1	AB-AB1-MIX-01
2	AB 1 MIXER 2	AB-AB1-MIX-02
3	AB 1 MIXER 3	AB-AB1-MIX-03
4	AB 1 MIXER 4	AB-AB1-MIX-04
5	AB 2 MIXER 1	AB-AB2-MIX-01
6	AB 2 MIXER 2	AB-AB2-MIX-02
7	AB 2 MIXER 3	AB-AB2-MIX-03
8	AB 2 MIXER 4	AB-AB2-MIX-04
9	AB 1 MIXED LIQUOR RECYCLE (MLR) PUMP 1	AB-RECYCLEPUMP-01
10	AB 1 MLR PUMP 2	AB-RECYCLEPUMP-02
11	AB 2 MLR PUMP 1	AB-RECYCLEPUMP-03
12	AB 2 MLR PUMP 2	AB-RECYCLEPUMP-04

THIS CONFORMED DOCUMENT IS RELEASED FOR THE CONVENIENCE OF THE CONTRACTOR UNDER THE AUTHORITY OF:

DANNY M HURTADO, P.E.
TX LIC NO. 104266

11-01-22
DATE

SEE DISCLAIMER FOR LIMITATIONS OF USE.

CONTRACT DOCUMENTS DATED JUNE 10, 2022, AS PART OF THE BIDDING DOCUMENTS (DRAWINGS AND SPECIFICATIONS) AND SUBSEQUENTLY ISSUED ADDENDA HAVE BEEN MERGED INTO ONE CONFORMING SET OF DOCUMENTS FOR THE CONVENIENCE OF THE CONTRACTOR. IF INCONSISTENCIES OR AMBIGUITIES BETWEEN "CONFORMED" DOCUMENTS AND CONTRACT DOCUMENTS ARE FOUND, THE CONTRACT DOCUMENTS SHALL GOVERN.

REV	DATE	BY	DESCRIPTION
			CONFORMED DOCUMENTS

DESIGNED SMM
DRAWN TBL
CHECKED DMH
DATE NOVEMBER 2022

** ORIGINAL SEALED BY DANNY M. HURTADO 06-10-22 TX PE 104266 **

carollo®
TBPELS No. F-882

CITY OF AUSTIN
FOUNDED 1839
CITY OF AUSTIN

CITY OF AUSTIN
WILD HORSE RANCH WWTP EXPANSION
MECHANICAL
AERATION BASIN 3 & 4 MODIFICATIONS
LOWER PLAN

VERIFY SCALES
BAR IS ONE INCH ON ORIGINAL DRAWING
0 1"
IF NOT ONE INCH ON THIS SHEET, ADJUST SCALES ACCORDINGLY

JOB NO. 10976A.00
DRAWING NO. 30M05
SHEET NO. 413 OF 464

Plot Date: 11-OCT-2022 8:16:48 AM
User: LDietzel
PlotScale: 1:1
DesignScript: Carollo_Std_Pen_v0905.pen
ColorTable: gshade.ctb
Model: Layout1
LAST SAVED BY: ldietzel
PROJECT NO. 10976A10
FILE NAME: 10976A1030M005.dgn

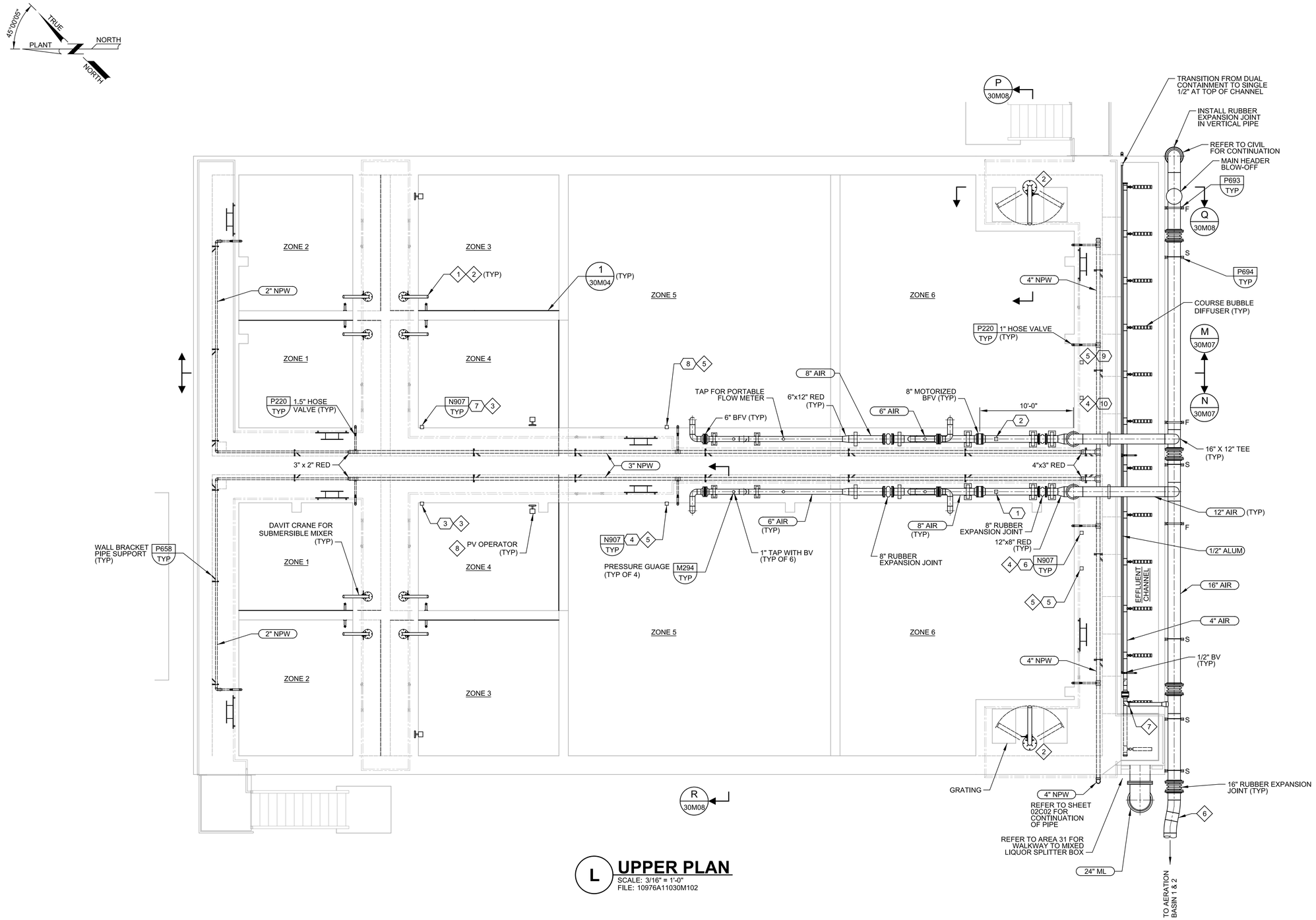

L UPPER PLAN

SCALE: 3/16" = 1'-0"
FILE: 10976A11030M102

GENERAL NOTES:

1. CONTRACTOR SHALL FIELD VERIFY EXISTING CONDITIONS PRIOR TO STARTING WORK.
2. REFER TO SPECIFICATION 01140 - WORK RESTRICTIONS FOR SHUTDOWN REQUIREMENTS.
3. DIFFUSER LAYOUT SHOWN IS ILLUSTRATIVE. REFER TO SPECIFICATIONS FOR EXACT SIZING REQUIREMENTS. COARSE BUBBLE DIFFUSER PER SPECIFICATION 11377A AND FINE BUBBLE DIFFUSER PER SPECIFICATION 11378A.
4. REFER TO SECTION 11375 FOR REQUIREMENTS ON DISSOLVED OXYGEN CONTROL SYSTEM.
5. PROVIDE ONE PORTABLE WASHDOWN MONITOR FOR AERATION BASINS 3&4. REFER TO SECTION 15120.

KEY NOTES:

1 SUBMERSIBLE MIXER ANGLE AND DEPTH ON GUIDE RAIL PER MANUFACTURER RECOMMENDATION.

2 LOCATION OF DAVIT CRANES SHALL BE COORDINATED WITH ANOXIC MIXER AND MLR PUMP MANUFACTURERS TO ENSURE PROPER FUNCTIONALITY.

3 ORP PROBE PER SPECIFICATION SECTION 17502.

4 TOTAL SUSPENDED SOLIDS PROBE PER SPECIFICATION SECTION 17522.

5 DISSOLVED OXYGEN PROBE PER SPECIFICATION SECTION 17506.

6 COORDINATE ALIGNMENT OF ML AND AIR PIPING WITH PLACEMENT OF MIXED LIQUOR SPLITTER BOX.

7 INSTALL PRESSURE REGULATING ORIFICE PER SECTION 1377A.

8 ALL SUBMERGED PLUG VALVES SHALL BE PROVIDED WITH TORQUE TUBE AND GEAR OPERATOR MOUNTED AT WALKWAY.

X EQUIPMENT TAGS:

1	AB 3 AIR FLOW METER	AB-AB3-FIT-01
2	AB 4 AIR FLOW METER	AB-AB4-FIT-01
3	AB 3 ORP PROBE	AB-AB3-AIT-01
4	AB 3 ZONE 5 DO PROBE	AB-AB3-AIT-02
5	AB 3 ZONE 6 DO PROBE	AB-AB3-AIT-03
6	AB 3 TSS PROBE	AB-AB3-AIT-04
7	AB 4 ORP PROBE	AB-AB4-AIT-01
8	AB 4 ZONE 5 DO PROBE	AB-AB4-AIT-02
9	AB 4 ZONE 6 DO PROBE	AB-AB4-AIT-03
10	AB 4 TSS PROBE	AB-AB4-AIT-04

THIS CONFORMED DOCUMENT IS RELEASED FOR THE CONVENIENCE OF THE CONTRACTOR UNDER THE AUTHORITY OF:

DANNY M HURTADO, P.E. 11-01-22
TX LIC NO. 104266 DATE

SEE DISCLAIMER FOR LIMITATIONS OF USE.

CONTRACT DOCUMENTS DATED JUNE 10, 2022, AS PART OF THE BIDDING DOCUMENTS (DRAWINGS AND SPECIFICATIONS) AND SUBSEQUENTLY ISSUED ADDENDA HAVE BEEN MERGED INTO ONE CONFORMING SET OF DOCUMENTS FOR THE CONVENIENCE OF THE CONTRACTOR. IF INCONSISTENCIES OR AMBIGUITIES BETWEEN "CONFORMED" DOCUMENTS AND CONTRACT DOCUMENTS ARE FOUND, THE CONTRACT DOCUMENTS SHALL GOVERN.

REV	DATE	BY	DESCRIPTION
			CONFORMED DOCUMENTS

DESIGNED SMM
DRAWN TBL
CHECKED DMH
DATE NOVEMBER 2022

** ORIGINAL SEALED BY DANNY M. HURTADO 06-10-22 TX PE 104266 **

carollo® TBPELS No. F-882

CITY OF AUSTIN — FOUNDED 1839

CITY OF AUSTIN

CITY OF AUSTIN
WILD HORSE RANCH WWTP EXPANSION
MECHANICAL
AERATION BASIN 3 & 4 MODIFICATIONS
UPPER PLAN

VERIFY SCALES
BAR IS ONE INCH ON ORIGINAL DRAWING
0 1"
IF NOT ONE INCH ON THIS SHEET, ADJUST SCALES ACCORDINGLY

JOB NO. 10976A.00
DRAWING NO. 30M06
SHEET NO. 414 OF 464

Plot Date: 11-OCT-2022 8:18:30 AM
User: LDietzel
DesignScript: Carollo_Std_Pen_v0905.pen
PlotScale: 1:1
ColorTable: gshade.ctb
Model: Layout1
LAST SAVED BY: ldietzel
PROJECT NO. 10976A10 FILE NAME: 10976A1030M006.dgn

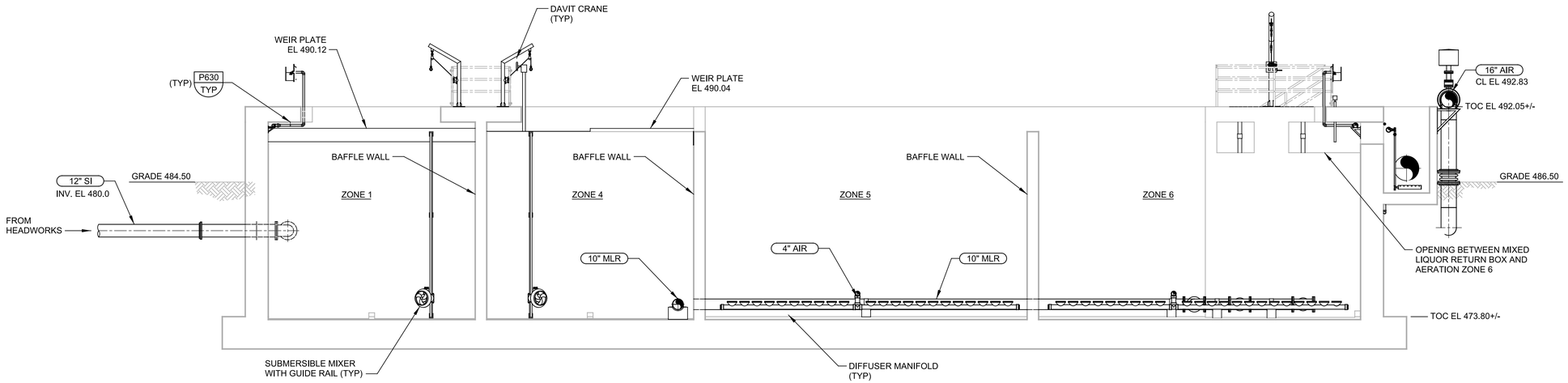

M SECTION
30M05
SCALE: 3/16" = 1'-0"
FILE: 10976A1030M310

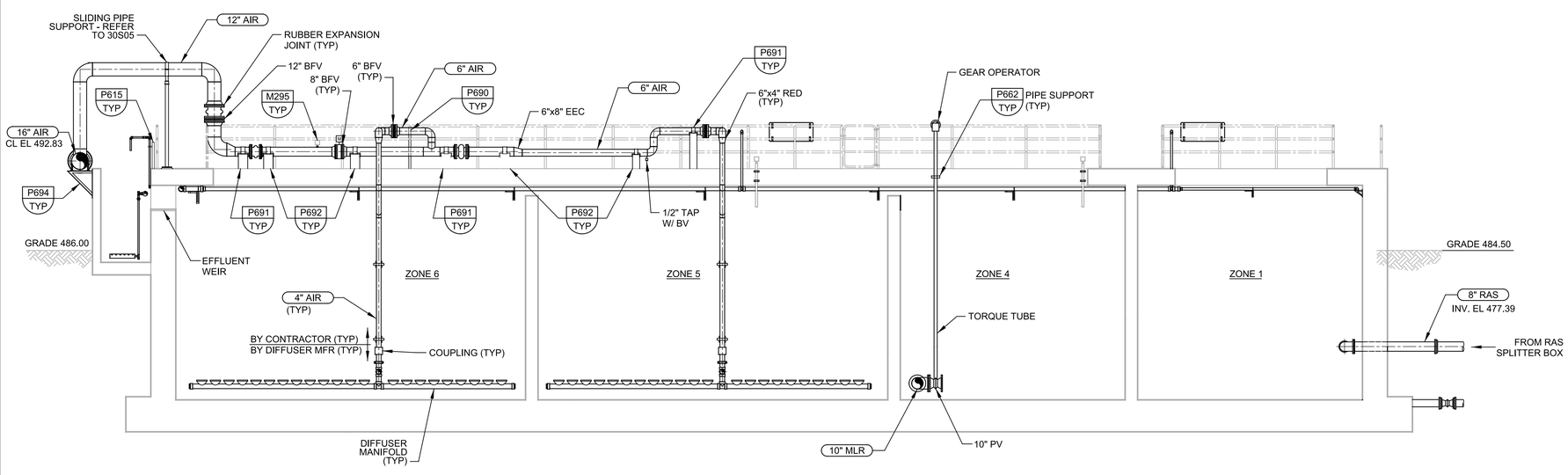

N SECTION
30M05
SCALE: 3/16" = 1'-0"
FILE: 10976A1030M311

THIS CONFORMED DOCUMENT IS RELEASED FOR THE CONVENIENCE OF THE CONTRACTOR UNDER THE AUTHORITY OF:

DANNY M HURTADO, P.E.
TX LIC NO. 104266

11-01-22
DATE

SEE DISCLAIMER FOR LIMITATIONS OF USE.

CONTRACT DOCUMENTS DATED JUNE 10, 2022, AS PART OF THE BIDDING DOCUMENTS (DRAWINGS AND SPECIFICATIONS) AND SUBSEQUENTLY ISSUED ADDENDA HAVE BEEN MERGED INTO ONE CONFORMING SET OF DOCUMENTS FOR THE CONVENIENCE OF THE CONTRACTOR. IF INCONSISTENCIES OR AMBIGUITIES BETWEEN "CONFORMED" DOCUMENTS AND CONTRACT DOCUMENTS ARE FOUND, THE CONTRACT DOCUMENTS SHALL GOVERN.

REV	DATE	BY	DESCRIPTION
			CONFORMED DOCUMENTS

DESIGNED SMM
DRAWN TBL
CHECKED DMH
DATE NOVEMBER 2022

** ORIGINAL SEALED BY DANNY M. HURTADO 06-10-22 TX PE 104266 **

carollo®
TBPELS No. F-882

CITY OF AUSTIN
FOUNDED 1839

CITY OF AUSTIN

CITY OF AUSTIN
WILD HORSE RANCH WWTP EXPANSION
MECHANICAL
AERATION BASIN 3 & 4 MODIFICATIONS
SECTIONS 1

VERIFY SCALES
BAR IS ONE INCH ON ORIGINAL DRAWING
0 1"
IF NOT ONE INCH ON THIS SHEET, ADJUST SCALES ACCORDINGLY

JOB NO. 10976A.00
DRAWING NO. 30M07
SHEET NO. 415 OF 464

PROJECT NO. 10976A10 FILE NAME: 10976A1030M007.dgn

Plot Date: 11-OCT-2022 8:20:09 AM
User: LDietzel
PlotScale: 1:1
DesignScript: Carollo_Std_Pen_v0905.pen
ColorTable: gshade.ctb
Model: Layout1
LAST SAVED BY: ldietzel

Plot Date: 11-OCT-2022 8:21:41 AM
User: LDietzel
Model: Layout1 ColorTable: gshade.ctb DesignScript: Carollo_Std_Pen_v0905.pen PlotScale: 1:1
LAST SAVED BY: ldietzel

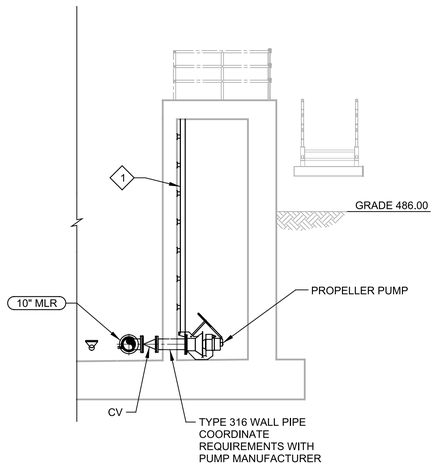

P SECTION
30M05
SCALE: 3/16" = 1'-0"
FILE: 10976A1030M313

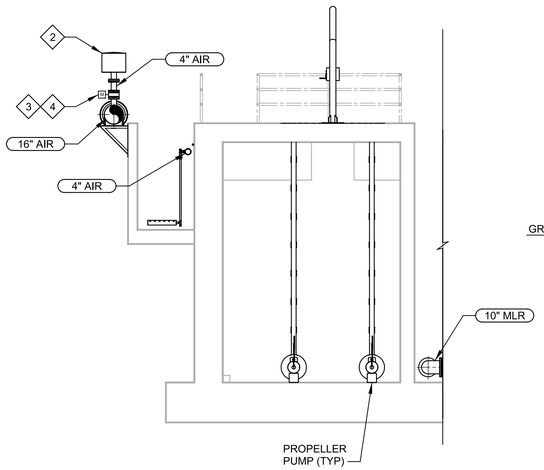

Q SECTION
30M05
SCALE: 3/16" = 1'-0"
FILE: 10976A1030M314

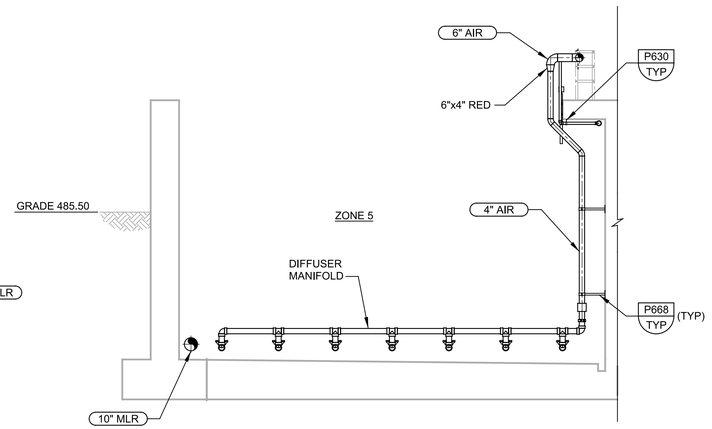

R SECTION
30M05
SCALE: 3/16" = 1'-0"
FILE: 10976A1030M315

KEY NOTES:

1 COORDINATE PLACEMENT OF GUIDERAILS WITH PUMP MANUFACTURER

2 SILENCER

3 MAIN HEADER BLOW-OFF VALVE

4 TO BE FURNISHED BY BLOWER SYSTEM MANUFACTURER. INSTALL AS SHOWN ON PLANS AND PER RECOMMENDATIONS OF MANUFACTURER.

THIS CONFORMED DOCUMENT IS RELEASED FOR THE CONVENIENCE OF THE CONTRACTOR UNDER THE AUTHORITY OF:

DANNY M HURTADO, P.E. — 11-01-22
TX LIC NO. 104266 — DATE

SEE DISCLAIMER FOR LIMITATIONS OF USE.

CONTRACT DOCUMENTS DATED JUNE 10, 2022, AS PART OF THE BIDDING DOCUMENTS (DRAWINGS AND SPECIFICATIONS) AND SUBSEQUENTLY ISSUED ADDENDA HAVE BEEN MERGED INTO ONE CONFORMING SET OF DOCUMENTS FOR THE CONVENIENCE OF THE CONTRACTOR. IF INCONSISTENCIES OR AMBIGUITIES BETWEEN "CONFORMED" DOCUMENTS AND CONTRACT DOCUMENTS ARE FOUND, THE CONTRACT DOCUMENTS SHALL GOVERN.

REV	DATE	BY	DESCRIPTION
			CONFORMED DOCUMENTS

DESIGNED SMM
DRAWN TBL
CHECKED DMH
DATE NOVEMBER 2022

** ORIGINAL SEALED BY DANNY M. HURTADO 06-10-22 TX PE 104266 **

carollo®
TBPELS No. F-882

CITY OF AUSTIN
FOUNDED 1839
CITY OF AUSTIN

CITY OF AUSTIN
WILD HORSE RANCH WWTP EXPANSION
MECHANICAL
AERATION BASIN 3 & 4 MODIFICATIONS
SECTIONS 2

VERIFY SCALES
BAR IS ONE INCH ON ORIGINAL DRAWING
0 1"
IF NOT ONE INCH ON THIS SHEET, ADJUST SCALES ACCORDINGLY

JOB NO. 10976A.00
DRAWING NO. 30M08
SHEET NO. 416 OF 464

Plot Date: 11-OCT-2022 8:23:23 AM
User: LDietzel
Model: Layout1 ColorTable: gshade.ctb DesignScript: Carollo_Std_Pen_v0905.pen PlotScale: 1:1
LAST SAVED BY: ldietzel

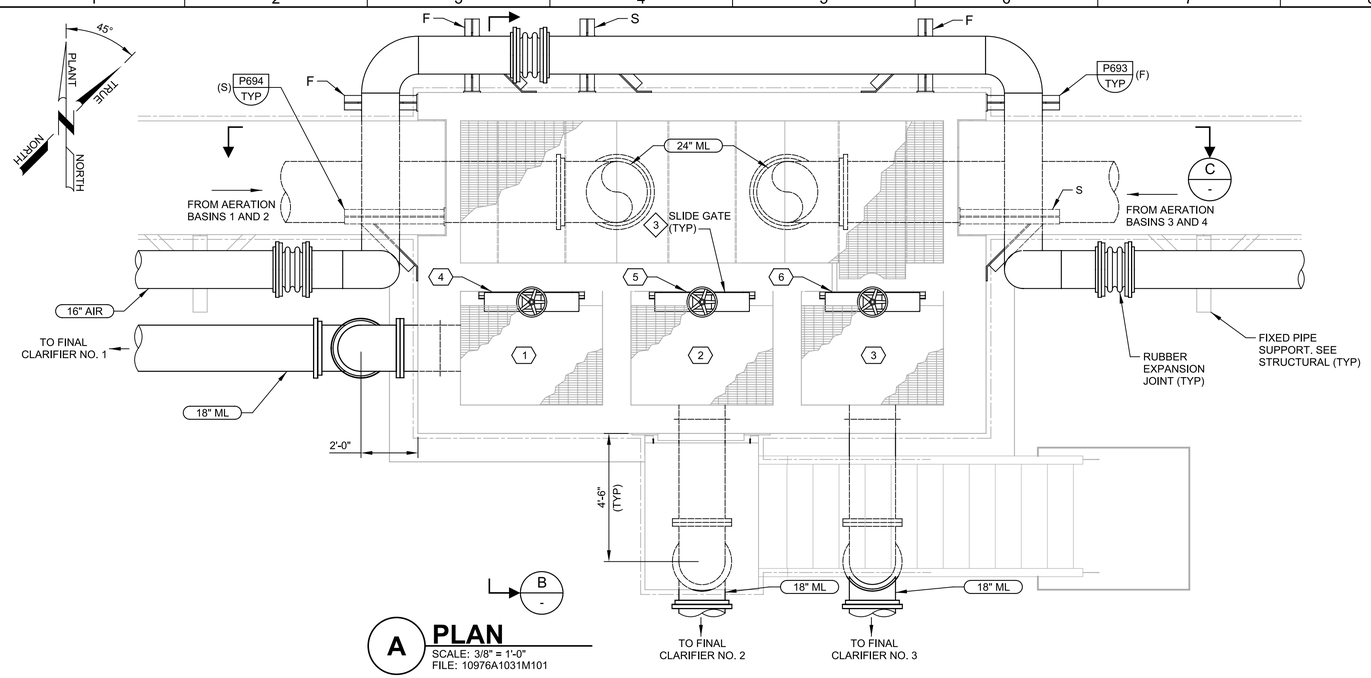

A PLAN
SCALE: 3/8" = 1'-0"
FILE: 10976A1031M101

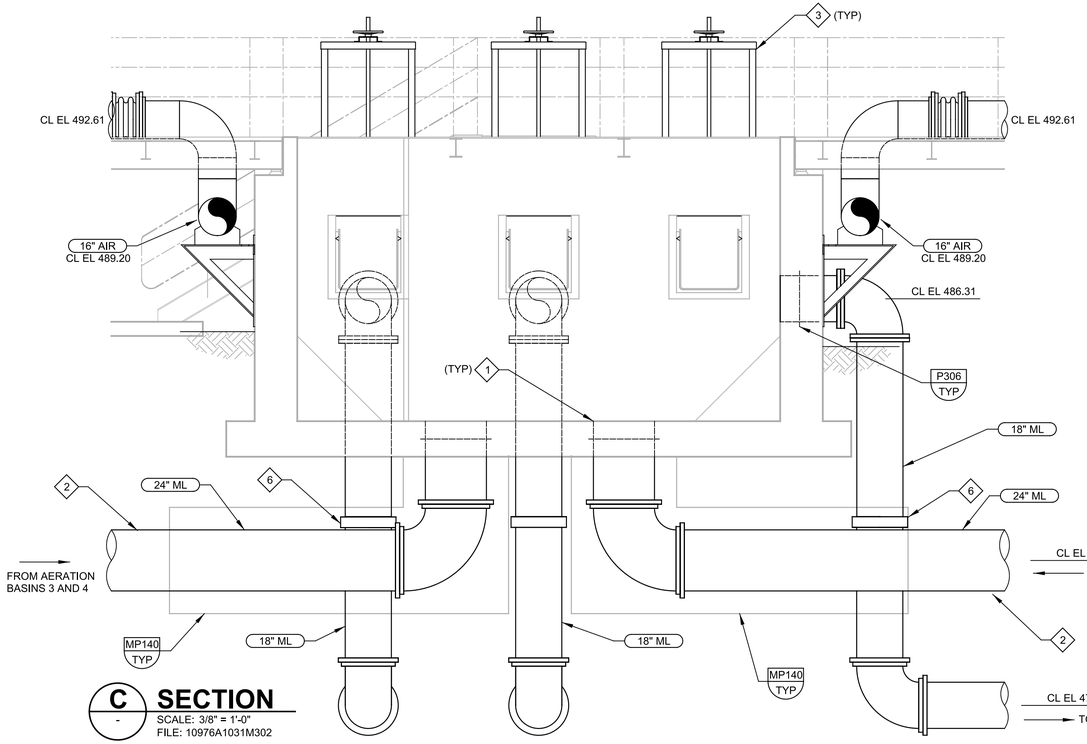

C SECTION
SCALE: 3/8" = 1'-0"
FILE: 10976A1031M302

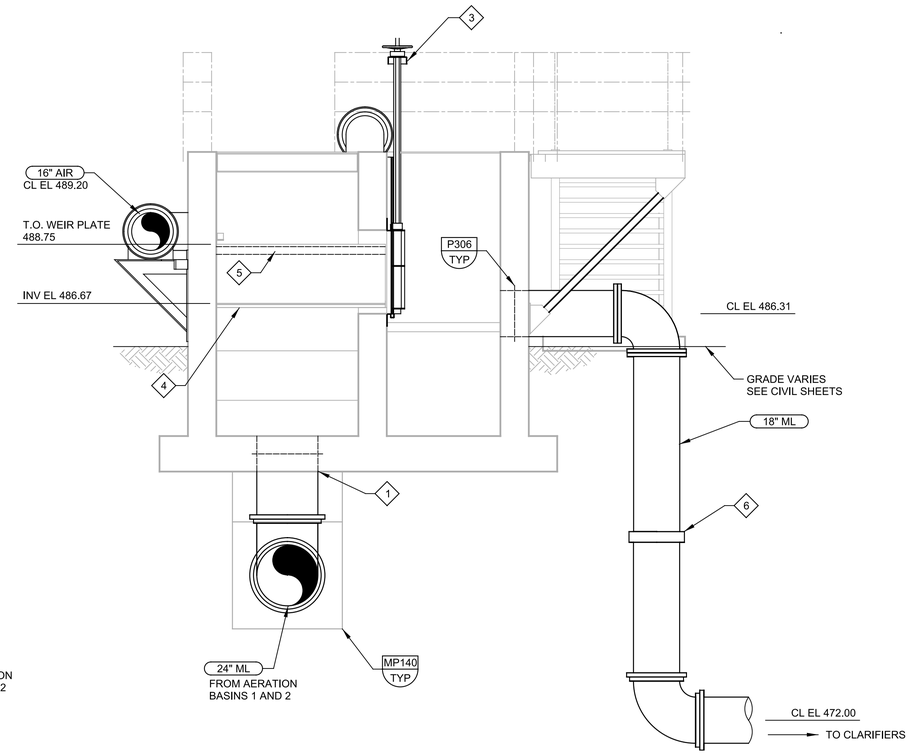

B SECTION
SCALE: 3/8" = 1'-0"
FILE: 10976A1031M301

THIS CONFORMED DOCUMENT IS RELEASED FOR THE CONVENIENCE OF THE CONTRACTOR UNDER THE AUTHORITY OF:

DANNY M HURTADO, P.E.
TX LIC NO. 104266

11-01-22
DATE

SEE DISCLAIMER FOR LIMITATIONS OF USE.

CONTRACT DOCUMENTS DATED JUNE 10, 2022, AS PART OF THE BIDDING DOCUMENTS (DRAWINGS AND SPECIFICATIONS) AND SUBSEQUENTLY ISSUED ADDENDA HAVE BEEN MERGED INTO ONE CONFORMING SET OF DOCUMENTS FOR THE CONVENIENCE OF THE CONTRACTOR. IF INCONSISTENCIES OR AMBIGUITIES BETWEEN "CONFORMED" DOCUMENTS AND CONTRACT DOCUMENTS ARE FOUND, THE CONTRACT DOCUMENTS SHALL GOVERN.

GENERAL NOTES:

1. SEE YARD PIPING SHEETS FOR CONTINUATION OF ALL PIPING.

KEY NOTES:

1 PIPES PENETRATE FLOOR SLAB PER DETAIL P342/TYP.

2 INSTALL RESTRAINED PUSH-ON JOINT ON PIPE AT A DISTANCE "L" PAST CONCRETE ENCASEMENT, AS SHOWN IN DETAIL P342/TYP.

3 MANUAL SLIDE GATE PER SECTION 11294C, TYPICAL OF 3.

4 2'-0" WIDE RECTANGULAR FIBERGLASS TROUGH PER SECTION 13120.

5 EMBEDDED ANGLE STIFFENER EAR.

6 INSTALL RESTRAINED PUSH-ON JOINT ON BURIED PIPE.

X EQUIPMENT TAGS:

1	AERATION BASIN FLOWBOX NO. 1	AB-FLOWBOX-01
2	AERATION BASIN FLOWBOX NO. 2	AB-FLOWBOX-02
3	AERATION BASIN FLOWBOX NO. 3	AB-FLOWBOX-03
4	AERATION BASIN FLOWBOX 1 SLIDE GATE	AB-FLB1-SG-01
5	AERATION BASIN FLOWBOX 2 SLIDE GATE	AB-FLB2-SG-01
6	AERATION BASIN FLOWBOX 3 SLIDE GATE	AB-FLB3-SG-01

REV	DATE	BY	DESCRIPTION
			CONFORMED DOCUMENTS

DESIGNED BMW
DRAWN LGD
CHECKED DMH
DATE NOVEMBER 2022

** ORIGINAL SEALED BY DANNY M. HURTADO 06-10-22 TX PE 104266 **

carollo®
TBPELS No. F-882

CITY OF AUSTIN

CITY OF AUSTIN
WILD HORSE RANCH WWTP EXPANSION
MECHANICAL
MLSS SPLITTER BOX PLAN AND SECTIONS

VERIFY SCALES
BAR IS ONE INCH ON ORIGINAL DRAWING
0 1"
IF NOT ONE INCH ON THIS SHEET, ADJUST SCALES ACCORDINGLY

JOB NO. 10976A.00
DRAWING NO. 31M01
SHEET NO. 417 OF 464

PROJECT NO. 10976A10 FILE NAME: 10976A1031M001.dgn

NOTES:

1. REFERENCE YARD PIPING FOR CONNECTION POINTS AND ORIENTATION OF PIPING.
2. THE WALLS AND FLOOR OF EFFLUENT TROUGH SHALL BE COATED WITH HYBRID POLYURETHANE (POL-C-1-BSE) AS SPECIFIED IN SPECIFICATION 09960.

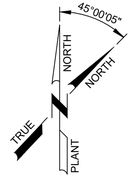

EQUIPMENT TAGS		
1	SECONDARY CLARIFIER No. 1 MECHANISM	SC-CLARIFIERMECH-01
2	SCUM PUMP No. 1	SC-SCUMPUMP-01
3	SCUM PUMP No. 2	SC-SCUMPUMP-02
4	SECONDARY CLARIFIER No. 2 MECHANISM	SC-CLARIFIERMECH-02
5	SCUM PUMP No. 3	SC-SCUMPUMP-03
6	SCUM PUMP No. 4	SC-SCUMPUMP-04
7	SECONDARY CLARIFIER No. 3 MECHANISM	SC-CLARIFIERMECH-03

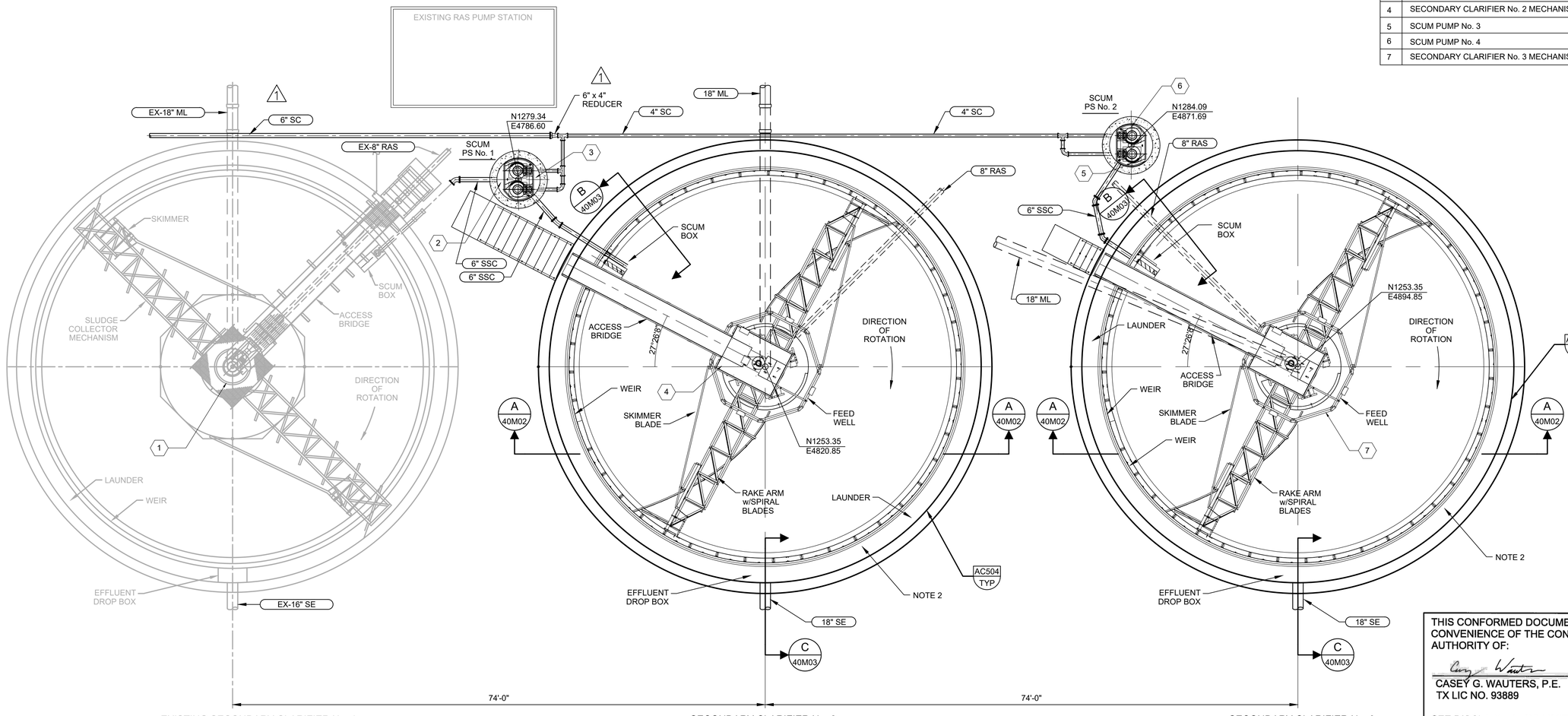

A SECONDARY CLARIFIERS MECHANICAL PLAN

SCALE: 1/8"=1'-0"
FILE: 10976A104S101.DWG

THIS CONFORMED DOCUMENT IS RELEASED FOR THE CONVENIENCE OF THE CONTRACTOR UNDER THE AUTHORITY OF:

CASEY G. WAUTERS, P.E. — 11-01-22
TX LIC NO. 93889 — DATE

SEE DISCLAIMER FOR LIMITATIONS OF USE.

CONTRACT DOCUMENTS DATED JUNE 10, 2022, AS PART OF THE BIDDING DOCUMENTS (DRAWINGS AND SPECIFICATIONS) AND SUBSEQUENTLY ISSUED ADDENDA HAVE BEEN MERGED INTO ONE CONFORMING SET OF DOCUMENTS FOR THE CONVENIENCE OF THE CONTRACTOR. IF INCONSISTENCIES OR AMBIGUITIES BETWEEN "CONFORMED" DOCUMENTS AND CONTRACT DOCUMENTS ARE FOUND, THE CONTRACT DOCUMENTS SHALL GOVERN.

REV	DATE	BY	DESCRIPTION
1	09/07/22	CW	ADDENDUM No. 5

CONFORMED DOCUMENTS

DESIGNED RL/MR
DRAWN AW
CHECKED SGE
DATE SEPTEMBER 2022

** ORIGINAL SEALED BY CASEY G. WAUTERS, P.E. 9/7/2022 TX PE 93889 **

AECOM TECHNICAL SERVICES INC.
13640 BRIARWICK DRIVE, SUITE 200
AUSTIN, TEXAS 78729
WWW.AECOM.COM
TBPE REG. NO. F-3580

TBPE No. F-882

CITY OF AUSTIN

CITY OF AUSTIN
WILD HORSE RANCH WWTP EXPANSION
MECHANICAL
SECONDARY CLARIFIERS MECHANICAL LAYOUT

VERIFY SCALES
BAR IS ONE INCH ON ORIGINAL DRAWING
0 1"
IF NOT ONE INCH ON THIS SHEET, ADJUST SCALES ACCORDINGLY

JOB NO. 10976A.10
DRAWING NO. 40M01
SHEET NO. 418 OF 464

LAST SAVED BY: dseivert

PROJECT NO. 9585A10 FILE NAME: 9585A10_SheetSeed.dgn

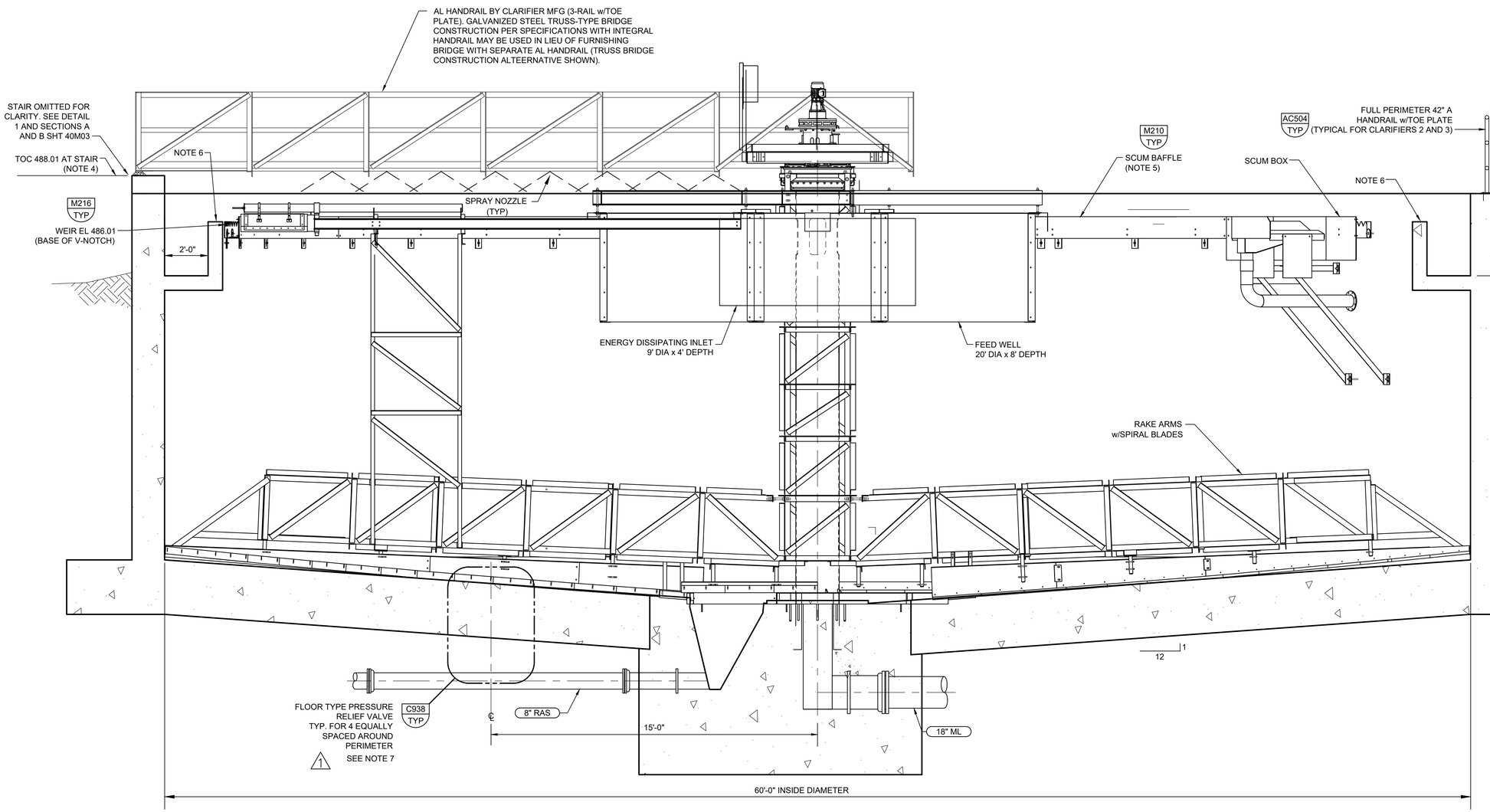

A 40M01 **SECTION**
SCALE: 3/8"=1'-0"
FILE: 1097 6A104S301.DWG

NOTES:

1. SECONDARY CLARIFIER MECHANISM TO BE IN ACCORDANCE WITH SPECIFICATION SECTION 11353, "CIRCULAR SECONDARY CLARIFIER EQUIPMENT, CENTER PIER SUPPORTED".
2. SECONDARY CLARIFIER MANUFACTURER TO COORDINATE DETAILS OF SCUM BAFFLE/WEIR ASSEMBLY.
3. SECONDARY CLARIFIER COMPONENTS ARE ROTATED INTO VIEW FOR CLARITY. REFER TO PLAN DWGS. FOR ACTUAL RADIAL POSITIONS.
4. INCREASED WALL HEIGHT IS REQUIRED AT BRIDGE, WALKWAY, AND STAIR SUPPORT. COORDINATE WITH CLARIFIER MFG FOR FINAL TOC ELEVATION AT BRIDGE FOR THE EQUIPMENT FURNISHED.
5. FURNISH SCUM BAFFLE WITH 24 INCHES DEPTH (MIN) FROM 6 FEET PRECEDING SCUM BOX TO 6 FEET BEYOND SCUM BOX.
6. THE WALLS AND FLOOR OF EFFLUENT TROUGH SHALL BE COATED WITH HYBRID POLYURETHANE (POL-C-1-BSE) AS SPECIFIED IN SPECIFICATION 09960.
7. PERFORATED PIPE BENEATH FLOOR TYPE PRESSURE RELIEF VALVES SHALL BE CONTINUOUS, AT RADIUS SHOWN ON PLANS, AROUND CENTER OF CLARIFIER.

THIS CONFORMED DOCUMENT IS RELEASED FOR THE CONVENIENCE OF THE CONTRACTOR UNDER THE AUTHORITY OF:

CASEY G. WAUTERS, P.E. — 11-01-22
TX LIC NO. 93889 — DATE

SEE DISCLAIMER FOR LIMITATIONS OF USE.

CONTRACT DOCUMENTS DATED JUNE 10, 2022, AS PART OF THE BIDDING DOCUMENTS (DRAWINGS AND SPECIFICATIONS) AND SUBSEQUENTLY ISSUED ADDENDA HAVE BEEN MERGED INTO ONE CONFORMING SET OF DOCUMENTS FOR THE CONVENIENCE OF THE CONTRACTOR. IF INCONSISTENCIES OR AMBIGUITIES BETWEEN "CONFORMED" DOCUMENTS AND CONTRACT DOCUMENTS ARE FOUND, THE CONTRACT DOCUMENTS SHALL GOVERN.

REV	DATE	BY	DESCRIPTION
1	09/07/22	CW	ADDENDUM No. 5

CONFORMED DOCUMENTS

DESIGNED RL/MR
DRAWN AW
CHECKED SGE
DATE SEPTEMBER 2022

** ORIGINAL SEALED BY CASEY G. WAUTERS, P.E. 9/7/2022 TX PE 93889 **

AECOM TECHNICAL SERVICES INC.
13640 BRIARWICK DRIVE, SUITE 200
AUSTIN, TEXAS 78729
WWW.AECOM.COM
TBPE REG. NO. F-3580

carollo
TBPE No. F-882

CITY OF AUSTIN

CITY OF AUSTIN
WILD HORSE RANCH WWTP EXPANSION
MECHANICAL
SECONDARY CLARIFIERS MECHANICAL SECTION

VERIFY SCALES
BAR IS ONE INCH ON ORIGINAL DRAWING
0 1"
IF NOT ONE INCH ON THIS SHEET, ADJUST SCALES ACCORDINGLY

JOB NO. 10976A.10
DRAWING NO. 40M02
SHEET NO. 419 OF 464

LAST SAVED BY: dseivert

PROJECT NO. 9585A10 FILE NAME: 9585A10_SheetSeed.dgn

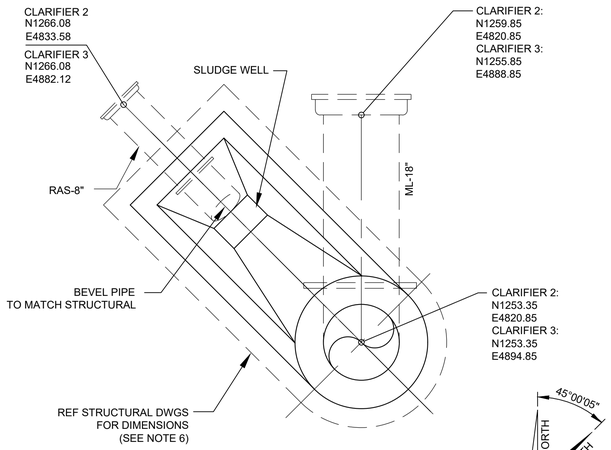

1 40M01 **DETAIL**
SCALE: NTS
FILE:

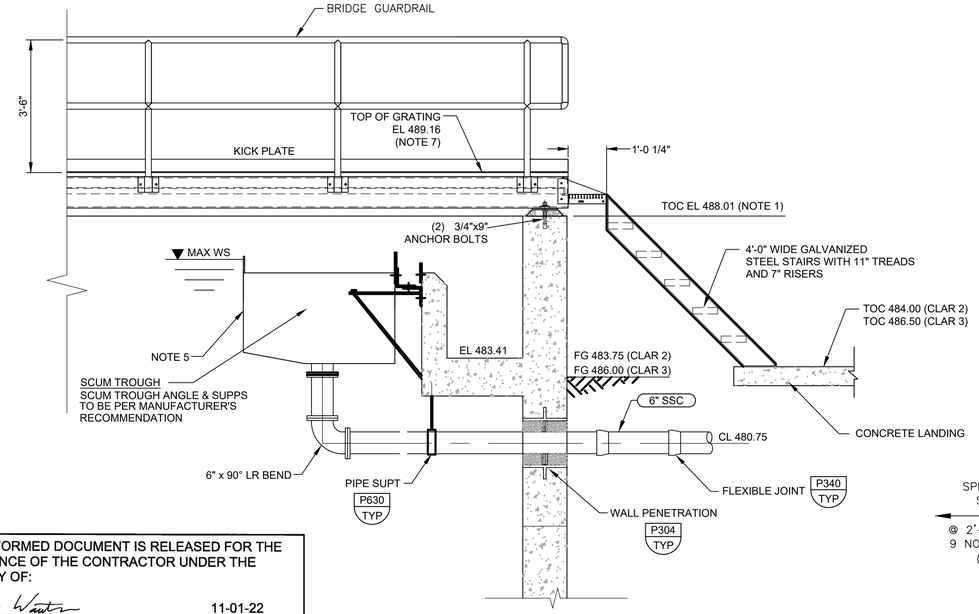

B 40M01 **SECTION**
SCALE: NTS
FILE:

THIS CONFORMED DOCUMENT IS RELEASED FOR THE CONVENIENCE OF THE CONTRACTOR UNDER THE AUTHORITY OF:

CASEY G. WAUTERS, P.E. — 11-01-22
TX LIC NO. 93889 — DATE

SEE DISCLAIMER FOR LIMITATIONS OF USE.

CONTRACT DOCUMENTS DATED JUNE 10, 2022, AS PART OF THE BIDDING DOCUMENTS (DRAWINGS AND SPECIFICATIONS) AND SUBSEQUENTLY ISSUED ADDENDA HAVE BEEN MERGED INTO ONE CONFORMING SET OF DOCUMENTS FOR THE CONVENIENCE OF THE CONTRACTOR. IF INCONSISTENCIES OR AMBIGUITIES BETWEEN "CONFORMED" DOCUMENTS AND CONTRACT DOCUMENTS ARE FOUND, THE CONTRACT DOCUMENTS SHALL GOVERN.

NOTES:

1. INCREASED WALL HEIGHT IS REQUIRED AT BRIDGE / WALKWAY AND STAIR SUPPORT. COORDINATE WITH CLARIFIER MFG FOR FINAL TOC ELEVATION AT BRIDGE FOR THE EQUIPMENT FURNISHED.
2. COORDINATE INSTALLATION OF SCUM SPRAY SYSTEM WITH INSTALLATION OF SCUM BOX AND ACCESS BRIDGE.
3. SCUM BAFFLE AND WEIR PLATE TO BE CONTINUOUS AROUND PERIMETER OF BASIN.
4. SCUM SPRAY/NPW PIPING TO BE GALVANIZED STEEL.
5. DRILL 3/4" DIA. HOLE IN SCUM TROUGH. LOCATE HOLE AT THE MID-DEPTH OF THE SCUM TROUGH, TO ALLOW CONTINUOUS FLOW FROM THE CLARIFIER, BELOW THE SCUM LAYER.
6. DETAIL SHOWN AS GENERAL HOPPER ORIENTATION - REFERENCE CLARIFIER PLAN AND YARD PIPING FOR HOPPER ORIENTATION (CLARIFIER 2 SHOWN). HOPPER DIMENSIONS AND CENTER COLUMN SUPPORT REQUIREMENTS MAY VARY PER CLARIFIER MFG FOR EQUIPMENT FURNISHED. CONTRACTOR TO COORDINATE AND SUBMIT FINAL DIMENSIONS FOR ENGINEER'S REVIEW.
7. WALKWAY BRIDGE HEIGHT DIMENSIONS MAY VARY PER CLARIFIER MFG. MAXIMUM DEPTH OF GROUT ALLOWABLE = 2 INCHES. IF NECESSARY FOR EQUIPMENT FURNISHED, FURNISH BASIN WALL HEIGHT AT BRIDGE PER SECTION A.

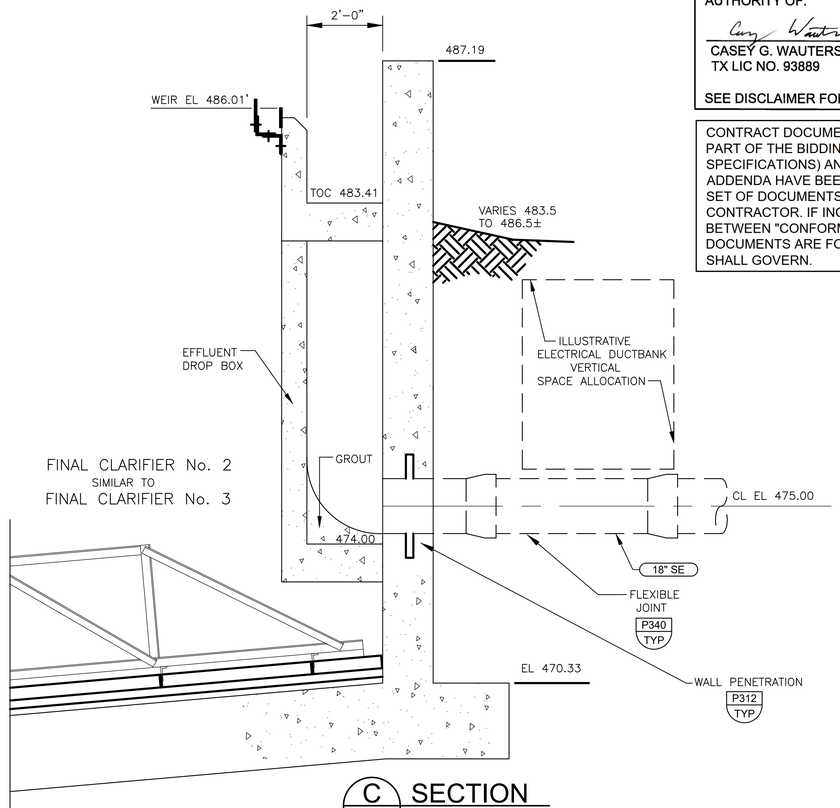

C 40M01 **SECTION**
SCALE: NTS
FILE:

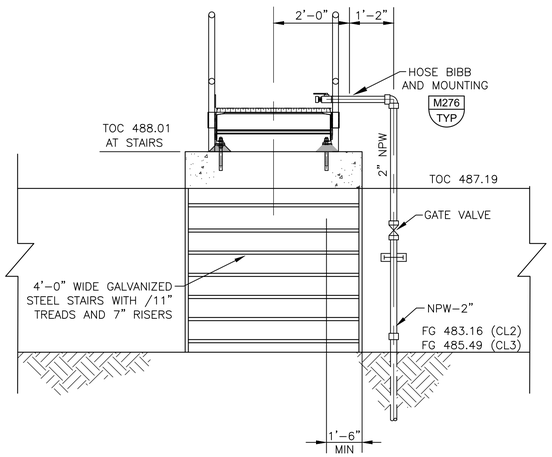

A - **SECTION**
SCALE: NTS
FILE:

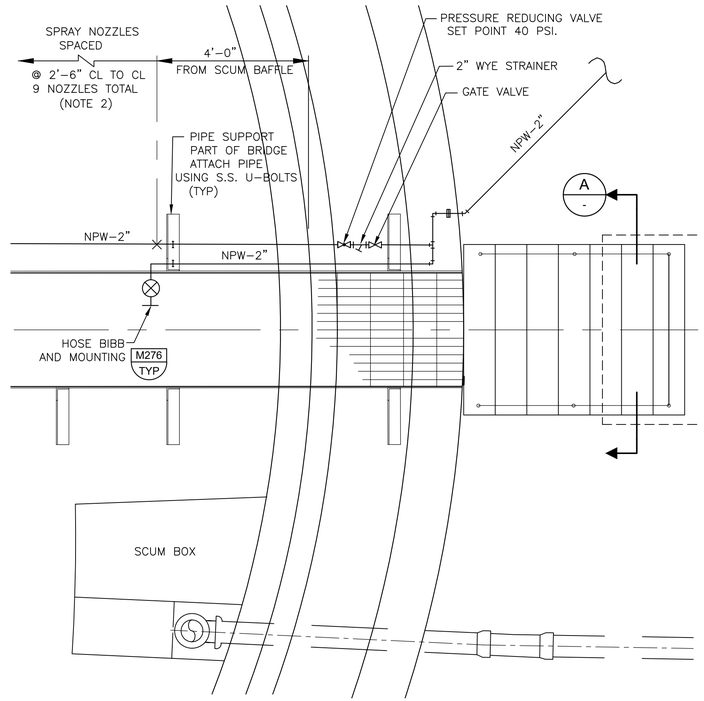

1. ALL CLARIFIER HARDWARE, INCLUDING CONNECTORS TO BE STAINLESS STEEL TYPE 316.
2. "FULLJET" MAXIMUM FREE PASSAGE SPRAY NOZZLE MODEL "3/8" HHMFP-SS11514" BY SPRAYING SYSTEM CO. OR EQUAL. PIPE CONNECTION SIZE = 3/8". 100° SPARAY ANGLE, CAPACITY = 2.4 GPM @ 40 PSI, FREE PASSAGE SIZE = 1/8".
3. COORDINATE INSTALLATION OF SCUM SPRAY SYSTEM WITH INSTALLATION OF SCUM BOX AND ACCESS BRIDGE.
4. SCUM SPRAY / NPW PIPING TO BE GALVANIZED STEEL.
5. ROTATED FOR CLARITY. SEE CLARIFIER PLAN SHEET 40M01 FOR WALKWAYS ORIENTATION.

1 - **DETAIL**
SCALE: NTS
FILE:

REV	DATE	BY	DESCRIPTION
			CONFORMED DOCUMENTS

DESIGNED RL/MR
DRAWN AW
CHECKED SGE
DATE FEBRUARY 2022

** ORIGINAL SEALED BY CASEY G. WAUTERS, P.E. 2/28/2022 TX PE 93889 **

AECOM TECHNICAL SERVICES INC.
13640 BRIARWICK DRIVE, SUITE 200
AUSTIN, TEXAS 78729
WWW.AECOM.COM
TBPE REG. NO. F-3580

TBPE No. F-882

CITY OF AUSTIN

CITY OF AUSTIN
WILD HORSE RANCH WWTP EXPANSION
MECHANICAL
CLARIFIER
SECTIONS AND DETAILS

VERIFY SCALES
BAR IS ONE INCH ON ORIGINAL DRAWING
0 1"
IF NOT ONE INCH ON THIS SHEET, ADJUST SCALES ACCORDINGLY

JOB NO. 10976A.10
DRAWING NO. 40M03
SHEET NO. 420 OF 464

LAST SAVED BY: dseivert

PROJECT NO. 9585A10 FILE NAME: 9585A10_SheetSeed.dgn

EQUIPMENT TAGS		
1	SCUM PUMP No. 1	SC-SCUMPUMP-01
2	SCUM PUMP No. 2	SC-SCUMPUMP-02
3	SCUM PUMP No. 1 DISCHARGE CHECK VALVE	SC-SCPU1-CV-01
4	SCUM PUMP No. 1 DISCHARGE PLUG VALVE	SC-SCPU1-PV-01
5	SCUM PUMP No. 2 DISCHARGE CHECK VALVE	SC-SCPU2-CV-01
6	SCUM PUMP No. 2 DISCHARGE PLUG VALVE	SC-SCPU2-PV-01
7	SCUM PUMP No. 3	SC-SCUMPUMP-03
8	SCUM PUMP No. 4	SC-SCUMPUMP-04
9	SCUM PUMP No. 3 DISCHARGE CHECK VALVE	SC-SCPU3-CV-01
10	SCUM PUMP No. 3 DISCHARGE PLUG VALVE	SC-SCPU3-PV-01
11	SCUM PUMP No. 4 DISCHARGE CHECK VALVE	SC-SCPU4-CV-01
12	SCUM PUMP No. 4 DISCHARGE PLUG VALVE	SC-SCPU4-PV-01

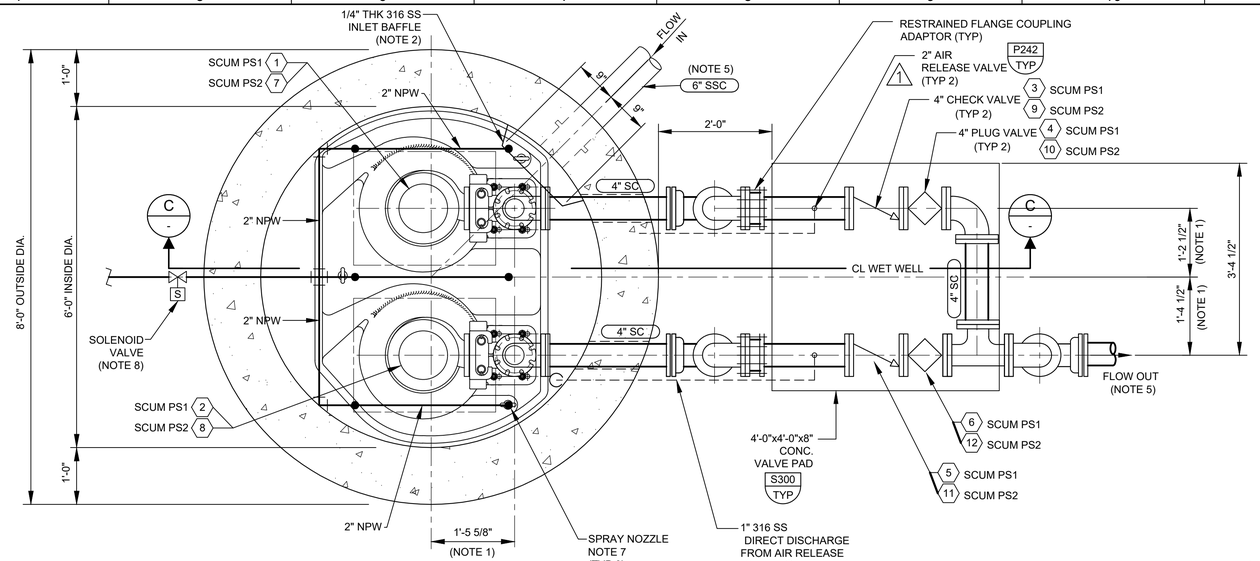

A SCUM PUMP STATION PLAN ELEV 477.50

SCALE: 3/4" = 1'-0"
FILE: 10976A1040S105.DWG

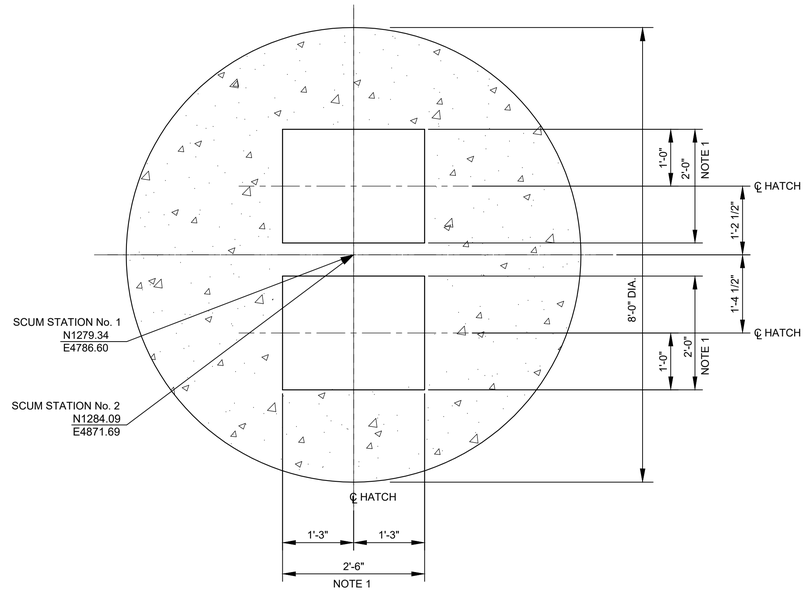

B SCUM PUMP STATION PLAN - GRADE

SCALE: 3/4" = 1'-0"
FILE: 10976A1040S106.DWG

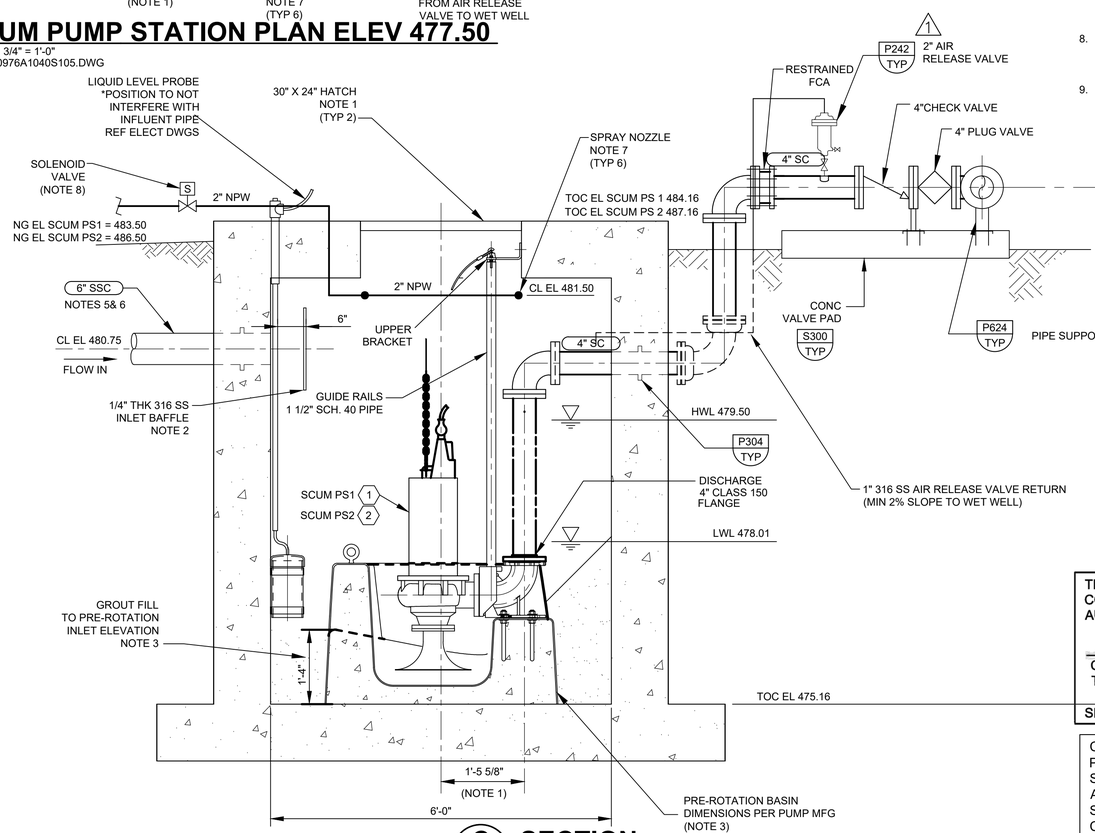

C SECTION

SCALE: 3/4"=1'-0"
FILE: 10976A1040S305.DWG

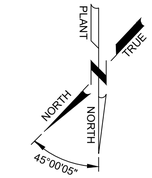

NOTES:

1. PUMP INSTALLATION AND HATCH DIMENSIONS MAY VERY PER PUMP MFG. COORDINATE WITH PUMP MANUFACTURER AND SUBMIT FINAL DIMENSIONS FOR ENGINEER'S APPROVAL.
2. INSTALL BAFFLE HEIGHT 18". INSTALL TO EXTEND 9" ABOVE TO 9" BELOW SSC-6" INLET PIPE CENTER LINE.
3. WET WELL PRE-ROTATION BASIN DIMENSIONS MAY VARY PER PUMP MFG. SUBMIT FINAL PRE-ROTATION BASIN DIMENSIONS FOR ENGINEER'S APPROVAL.
4. RCP WET WELL WITH CAST-IN-PLACE UPPER AND LOWER SLAB MAY BE USED IN LIEU OF MONOLITHIC CONSTRUCTION (CONTRACTOR'S OPTION). SEE STRUCTURAL DRAWINGS.
5. PIPING ORIENTATION FOR SCUM PUMP STATION 2 IS SHOWN. SCUM PUMP STATION 1 PIPE ORIENTATION SIMILAR. REFERENCE DRAWING 40M01 AND YARD PIPING SHEETS FOR CONNECTION POINTS AND ORIENTATION OF PIPING.
6. SCUM STATION COMPONENTS AND PIPING ARE ROTATED INTO VIEW FOR CLARITY. REFER TO PLAN DRAWINGS FOR ACTUAL RADIAL POSITIONS.
7. PROVIDE SPRAY NOZZLE BY "SPRAYING SYSTEM CO." OR EQUAL. PIPE CONNECTION SIZE = 1/2" 108° SPRAY ANGLE, CAPACITY = 4 GPM @ 40 PSIG. ALL MATERIAL TO BE TYPE 316 STAINLESS STEEL.
8. OPENING AND CLOSING OF SOLENOID VALVE TO BE CONTROLLED BY LIQUID LEVEL PROBE IN WET WELL. REFERENCE ELECTRICAL DRAWINGS FOR DETAILS.
9. CONTRACTOR TO DETERMINE SPRAY NOZZLE LOCATIONS AND SPACING TO ENSURE FULL WATER SURFACE COVERAGE AND EVEN SPRAYING DISTRIBUTION. NPW SUPPLY PIPING FOR SPRAY NOZZLES TO BE SCH 80 STEEL PIPE. CONTRACTOR TO DETERMINE NPW PIPE SUPPORT TYPE AND LOCATIONS. SUBMIT SHOP DRAWINGS OF NPW PIPING AND SPRAY NOZZLE ARRANGEMENT FOR OWNER / ENGINEER'S APPROVAL.

THIS CONFORMED DOCUMENT IS RELEASED FOR THE CONVENIENCE OF THE CONTRACTOR UNDER THE AUTHORITY OF:

CASEY G. WAUTERS, P.E. — 11-01-22 DATE
TX LIC NO. 93889

SEE DISCLAIMER FOR LIMITATIONS OF USE.

CONTRACT DOCUMENTS DATED JUNE 10, 2022, AS PART OF THE BIDDING DOCUMENTS (DRAWINGS AND SPECIFICATIONS) AND SUBSEQUENTLY ISSUED ADDENDA HAVE BEEN MERGED INTO ONE CONFORMING SET OF DOCUMENTS FOR THE CONVENIENCE OF THE CONTRACTOR. IF INCONSISTENCIES OR AMBIGUITIES BETWEEN "CONFORMED" DOCUMENTS AND CONTRACT DOCUMENTS ARE FOUND, THE CONTRACT DOCUMENTS SHALL GOVERN.

REV	DATE	BY	DESCRIPTION
1	08/29/22	CW	ADDENDUM No. 3

CONFORMED DOCUMENTS

DESIGNED RL/MR
DRAWN AW
CHECKED SGE
DATE AUGUST 2022

**
ORIGINAL
SEALED BY
CASEY G. WAUTERS, P.E.
8/29/2022
TX PE 93889
**

AECOM TECHNICAL SERVICES INC.
13640 BRIARWICK DRIVE, SUITE 200
AUSTIN, TEXAS 78729
WWW.AECOM.COM
TBPE REG. NO. F-3580

TBPE No. F-882

CITY OF AUSTIN

CITY OF AUSTIN
WILD HORSE RANCH WWTP EXPANSION
MECHANICAL
SCUM PUMP STATION
MECHANICAL PLAN AND SECTION

VERIFY SCALES
BAR IS ONE INCH ON ORIGINAL DRAWING
0 — 1"
IF NOT ONE INCH ON THIS SHEET, ADJUST SCALES ACCORDINGLY

JOB NO. 10976A.10
DRAWING NO. 40M05
SHEET NO. 421 OF 464

LAST SAVED BY: dseivert

PROJECT NO. 9585A10 FILE NAME: 9585A10_SheetSeed.dgn

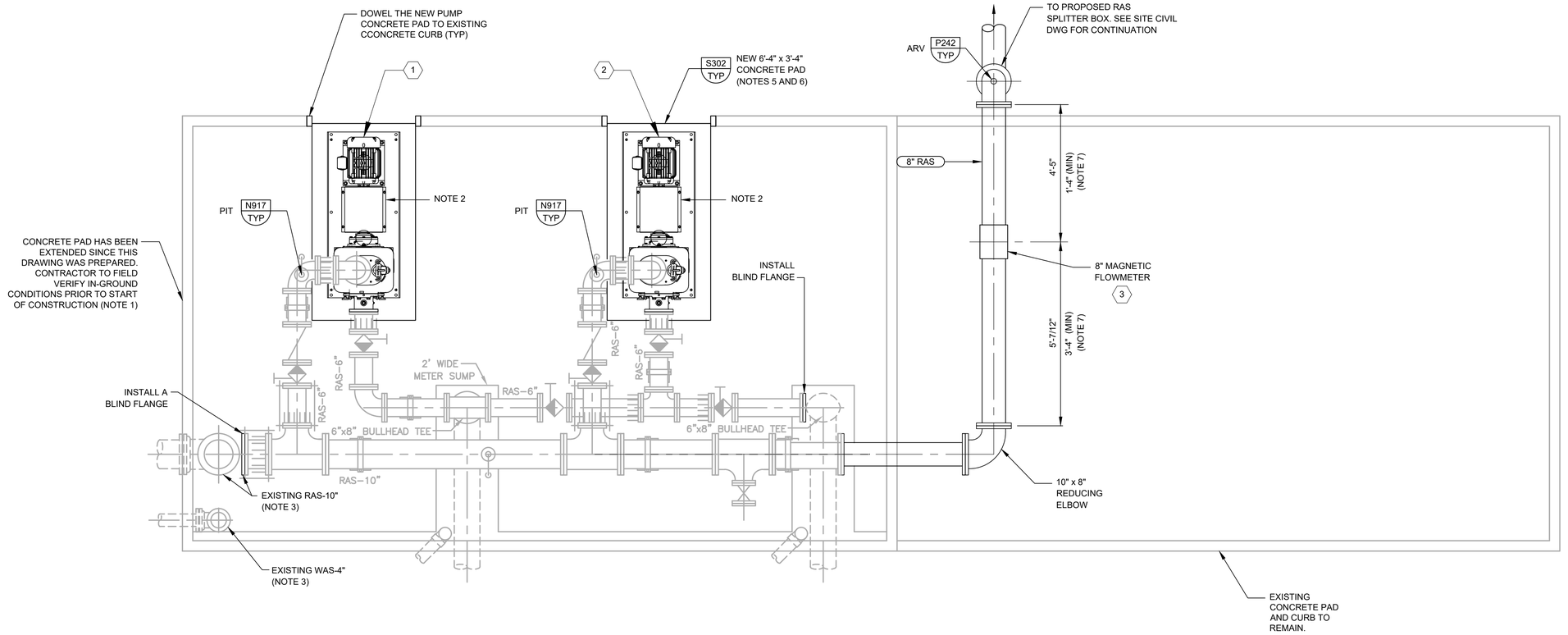

A EXISTING RAS PUMP STATION No. 1 PLAN

SCALE: 1/2" = 1'-0"
FILE:

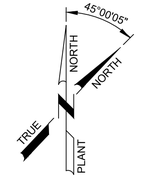

NOTES:

1. INFORMATION SHOWN ON THIS DRAWING IS BASED ON REVIEW OF RECORD DRAWINGS AND ENGINEER'S SITE OBSERVATIONS. ACTUAL FIELD CONDITIONS MAY BE DIFFERENT FROM THOSE SHOWN ON THIS DRAWING. CONTRACTOR TO FIELD VERIFY INSTALLED CONDITIONS IMPACTED BY OR IMPACTING THIS WORK PRIOR TO INITIATING THE WORK. CONTRACTOR SHALL REFER TO CONSTRUCTION DOCUMENTS FOR RESPONSIBILITIES RELATIVE TO VERIFICATION OF EXISTING FACILITIES AND COORDINATION WITH PLANT OPERATION.
2. RAS PUMP TO BE REMOVED AND REPLACED WITH NEW PUMPS. SUPPORT PIPING IN PLACE WHILE THE PUMPING UNIT IS REMOVED TO AVOID TRANSFERRING STRESS TO EXISTING VALVES AND COUPLINGS.
3. PLUG AND FILL THE ABANDONED SEGMENT OF EXISTING PIPING WITH CONTROLLED LOW STRENGTH MATERIAL. REFER TO CIVIL YARD PIPING DRAWINGS FOR DEMOLITION AND/OR ABANDONING OF EXISTING PIPING OUTSIDE THE CONCRETE PAD.
4. REMOVE ALL DEMOLITION MATERIALS AND DISPOSE OF THEM IN AN APPROVED MANNER, IN ACCORDANCE WITH CONTRACT DOCUMENTS.
5. COORDINATE WITH PUMP MANUFACTURER AND ADJUST SIZE OF EQUIPMENT PAD AS NECESSARY TO PROVIDE 6 INCHES OF CLEARANCE ALL AROUND INSTALLED EQUIPMENT.
6. CONTRACTOR TO FIELD VERIFY AND ADJUST THE ELEVATION OF PUMP PAD AND PUMP SKID AS NEEDED BASED ON THE ACTUAL SIZE OF PROPOSED PUMPING UNITS, TO ALIGN PUMP SUCTION FLANGES WITH EXISTING SUCTION PIPING AND TO PREVENT TRANSFERRING STRESS TO EQUIPMENT AND SHAFT COUPLING.
7. COORDINATE THE STRAIGHT RUN REQUIREMENTS WITH FLOWMETER MANUFACTURER PRIOR TO INSTALLATION, AND INSTALL PER MANUFACTURER'S INSTALLATION GUIDANCE.

EQUIPMENT TAGS		
1	RAS PUMP No. 1	SC-RASPUMP-01
2	RAS PUMP No. 2	SC-RASPUMP-02
3	RAS PUMP STATION No. 1 FLOWMETER	SC-RASPUMP-02

THIS CONFORMED DOCUMENT IS RELEASED FOR THE CONVENIENCE OF THE CONTRACTOR UNDER THE AUTHORITY OF:

CASEY G. WAUTERS, P.E.
TX LIC NO. 93889

11-01-22
DATE

SEE DISCLAIMER FOR LIMITATIONS OF USE.

CONTRACT DOCUMENTS DATED JUNE 10, 2022, AS PART OF THE BIDDING DOCUMENTS (DRAWINGS AND SPECIFICATIONS) AND SUBSEQUENTLY ISSUED ADDENDA HAVE BEEN MERGED INTO ONE CONFORMING SET OF DOCUMENTS FOR THE CONVENIENCE OF THE CONTRACTOR. IF INCONSISTENCIES OR AMBIGUITIES BETWEEN "CONFORMED" DOCUMENTS AND CONTRACT DOCUMENTS ARE FOUND, THE CONTRACT DOCUMENTS SHALL GOVERN.

REV	DATE	BY	DESCRIPTION
			CONFORMED DOCUMENTS

DESIGNED BY
DRAWN AW
CHECKED SGE
DATE FEBRUARY 2022

**
ORIGINAL SEALED BY
CASEY G. WAUTERS, P.E.
2/28/2022
TX PE 93889
**

AECOM TECHNICAL SERVICES INC.
13640 BRIARWICK DRIVE, SUITE 200
AUSTIN, TEXAS 78729
WWW.AECOM.COM
TBPE REG. NO. F-3580

TBPE No. F-882

CITY OF AUSTIN

CITY OF AUSTIN
WILD HORSE RANCH WWTP EXPANSION
MECHANICAL
EXISTING RAS PUMP STATION No. 1 MECHANICAL PLAN

VERIFY SCALES
BAR IS ONE INCH ON ORIGINAL DRAWING
0 1"
IF NOT ONE INCH ON THIS SHEET, ADJUST SCALES ACCORDINGLY

JOB NO. 10976A.10
DRAWING NO. 45M01
SHEET NO. 422 OF 464

LAST SAVED BY:

PROJECT NO. 9585A10
FILE NAME:

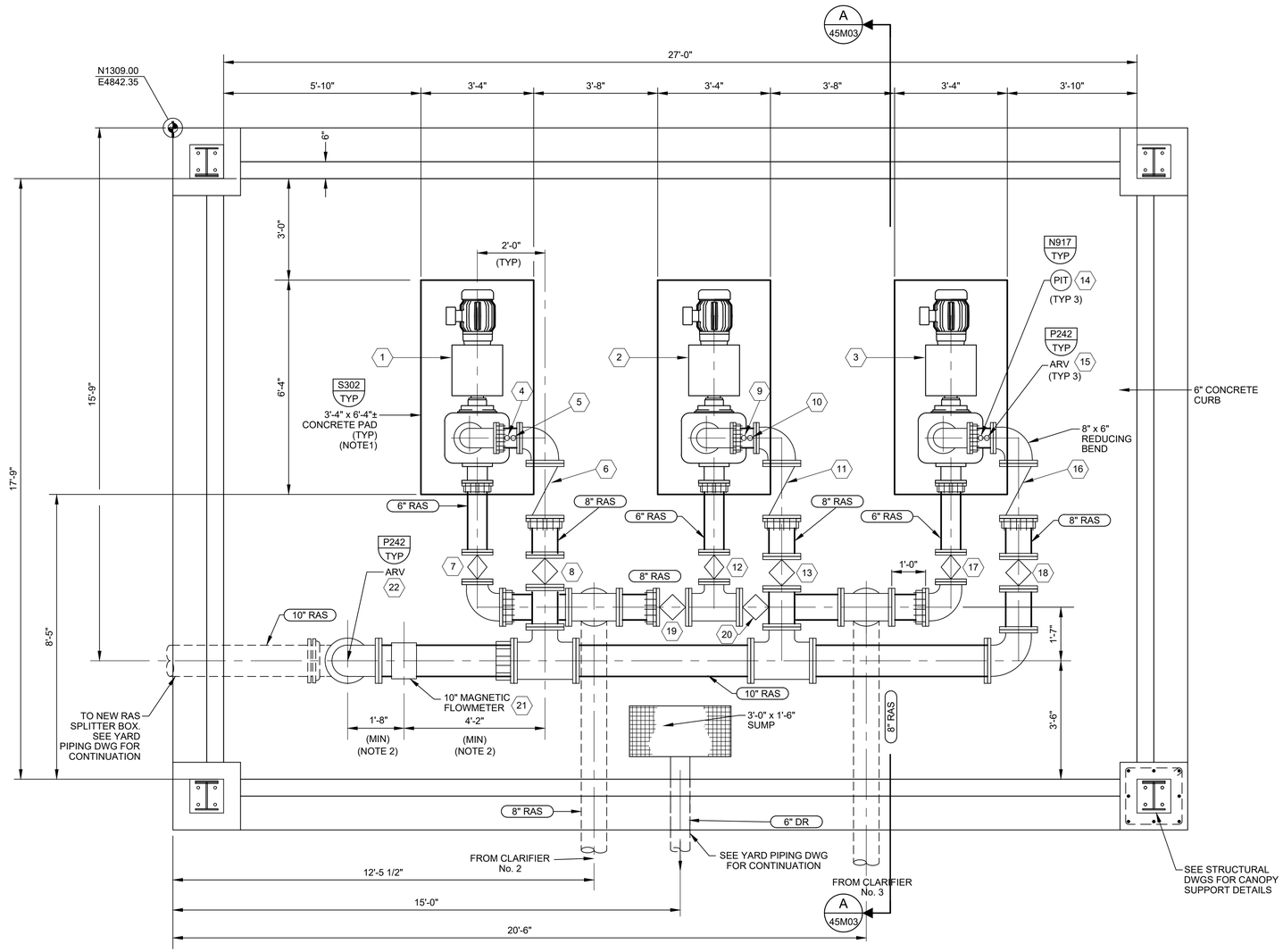

A RAS PUMP STATION No. 2 PLAN

SCALE: 1/2" = 1'-0"
FILE: 10976A104S101.DWG

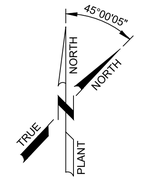

NOTES:

1. COORDINATE WITH PUMP MANUFACTURER AND ADJUST SIZE OF EQUIPMENT PAD AS NECESSARY TO PROVIDE 6 INCHES OF CLEARANCE ALL AROUND INSTALLED EQUIPMENT.
2. COORDINATE THE STRAIGHT RUN REQUIREMENTS WITH FLOWMETER MANUFACTURER PRIOR TO INSTALLATION, AND INSTALL PER MANUFACTURER'S INSTALLATION GUIDANCE.
3. SEE SHEET 02C11 FOR LOCATION OF AREA WASHDOWN HOSE BIBB FOR THIS FACILITY

EQUIPMENT TAGS		
1	RAS PUMP No. 3	SC-RASPUMP-03
2	RAS PUMP No. 4	SC-RASPUMP-04
3	RAS PUMP No. 5	SC-RASPUMP-05
4	PRESSURE TRANSMITTER RAS PUMP No. 3	SC-RAPU3-PIT-01
5	AIR RELEASE VALVE RAS PUMP No. 3	SC-RAPU3-ARV-01
6	CHECK VALVE RAS PUMP No. 3	SC-RAPU3-CV-01
7	PLUG VALVE U/S RAS PUMP No. 3	SC-RAPU3-PV-01
8	PLUG VALVE D/S RAS PUMP No. 3	SC-RAPU3-PV-02
9	PRESSURE TRANSMITTER RAS PUMP No. 4	SC-RAPU4-PIT-01
10	AIR RELEASE VALVE RAS PUMP No. 4	SC-RAPU4-ARV-01
11	CHECK VALVE RAS PUMP No. 4	SC-RAPU4-CV-01
12	PLUG VALVE U/S RAS PUMP No. 4	SC-RAPU4-PV-01
13	PLUG VALVE D/S RAS PUMP No. 4	SC-RAPU4-PV-02
14	PRESSURE TRANSMITTER RAS PUMP No. 5	SC-RAPU5-PIT-01
15	AIR RELEASE VALVE RAS PUMP No. 5	SC-RAPU5-ARV-01
16	CHECK VALVE RAS PUMP No. 5	SC-RAPU5-CV-01
17	PLUG VALVE U/S RAS PUMP No. 5	SC-RAPU5-PV-01
18	PLUG VALVE D/S RAS PUMP No. 5	SC-RAPU5-PV-02
19	PLUG VALVE ISOLATION BTWN PUMP 3 & 4	SC-RAPI3-PV-01
20	PLUG VALVE ISOLATION BTWN PUMP 4 & 5	SC-RAPI3-PV-02
21	RAS PUMP STATION No. 2 FLOWMETER	SC-RAPI4-FIT-01
22	AIR RELEASE VALVE D/S FLOWMETER	SC-RAPI4-ARV-01

THIS CONFORMED DOCUMENT IS RELEASED FOR THE CONVENIENCE OF THE CONTRACTOR UNDER THE AUTHORITY OF:

CASEY G. WAUTERS, P.E.
TX LIC NO. 93889

11-01-22
DATE

SEE DISCLAIMER FOR LIMITATIONS OF USE.

CONTRACT DOCUMENTS DATED JUNE 10, 2022, AS PART OF THE BIDDING DOCUMENTS (DRAWINGS AND SPECIFICATIONS) AND SUBSEQUENTLY ISSUED ADDENDA HAVE BEEN MERGED INTO ONE CONFORMING SET OF DOCUMENTS FOR THE CONVENIENCE OF THE CONTRACTOR. IF INCONSISTENCIES OR AMBIGUITIES BETWEEN "CONFORMED" DOCUMENTS AND CONTRACT DOCUMENTS ARE FOUND, THE CONTRACT DOCUMENTS SHALL GOVERN.

REV	DATE	BY	DESCRIPTION
			CONFORMED DOCUMENTS

DESIGNED BY
DRAWN AW
CHECKED SGE
DATE FEBRUARY 2022

**
ORIGINAL SEALED BY CASEY G. WAUTERS, P.E. 2/28/2022 TX PE 93889
**

AECOM TECHNICAL SERVICES INC.
13640 BRIARWICK DRIVE, SUITE 200
AUSTIN, TEXAS 78729
WWW.AECOM.COM
TBPE REG. NO. F-3580

TBPE No. F-882

CITY OF AUSTIN

CITY OF AUSTIN
WILD HORSE RANCH WWTP EXPANSION
MECHANICAL
RAS PUMP STATION No. 2
MECHANICAL PLAN

VERIFY SCALES
BAR IS ONE INCH ON ORIGINAL DRAWING
0 1"
IF NOT ONE INCH ON THIS SHEET, ADJUST SCALES ACCORDINGLY

JOB NO. 10976A.10
DRAWING NO. 45M02
SHEET NO. 423 OF 464

LAST SAVED BY:

PROJECT NO. 9585A10
FILE NAME:

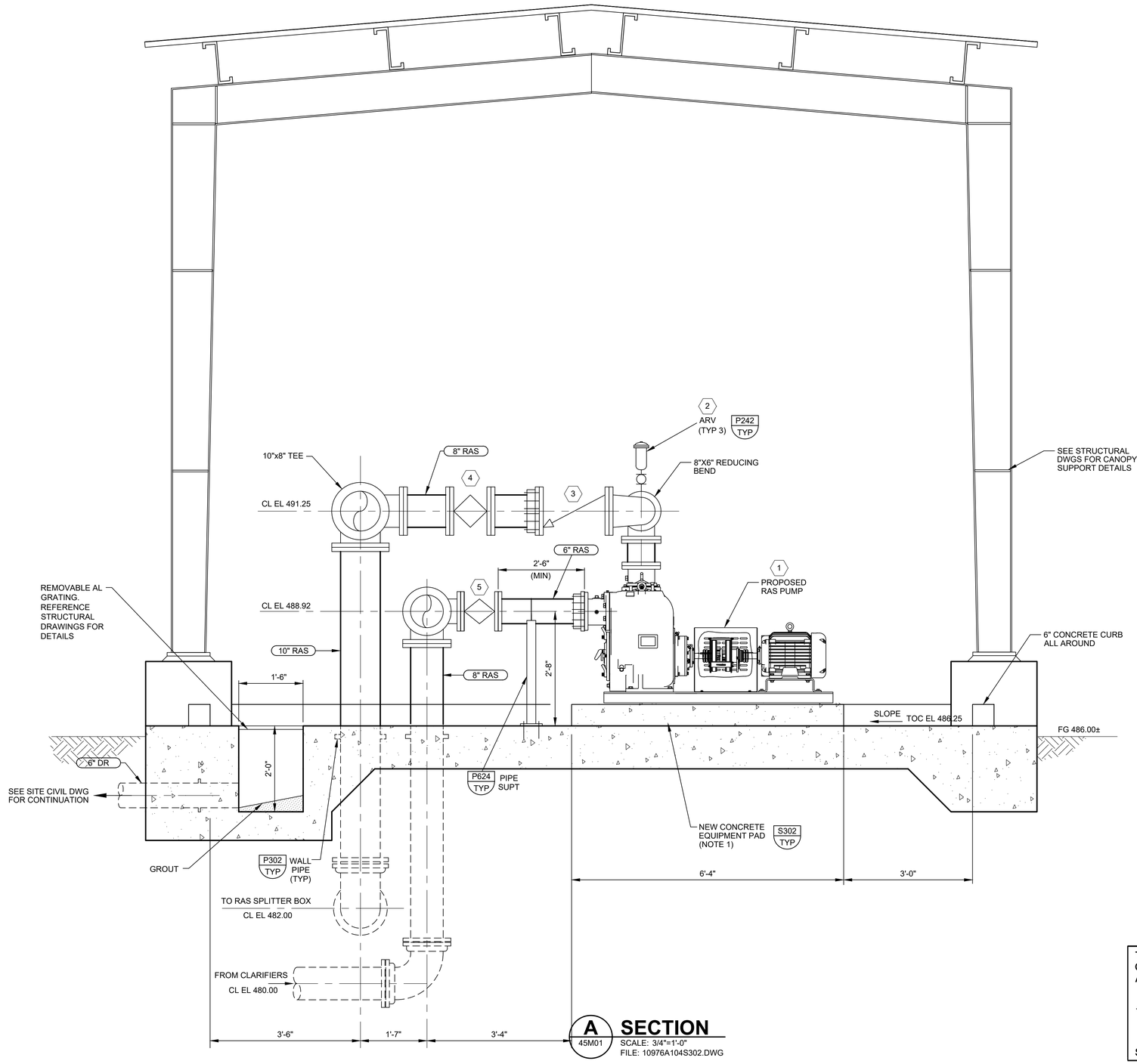

A 45M01 **SECTION**
SCALE: 3/4"=1'-0"
FILE: 10976A104S302.DWG

NOTES:

1. COORDINATE WITH PUMP MANUFACTURER AND ADJUST SIZE OF EQUIPMENT PAD AS NECESSARY TO PROVIDE 6 INCHES OF CLEARANCE ALL AROUND INSTALLED EQUIPMENT.

EQUIPMENT TAGS		
1	RAS PUMP No. 4	SC-RASPUMP-04
2	AIR RELEASE VALVE RAS PUMP No.4	SC-RAPU4-ARV-01
3	CHECK VALVE RAS PUMP No. 4	SC-RAPU4-CV-01
4	PLUG VALVE D/S RAS PUMP No. 4	SC-RAPU4-PV-02
5	PLUG VALVE U/S RAS PUMP No. 4	SC-RAPU4-PV-01

THIS CONFORMED DOCUMENT IS RELEASED FOR THE CONVENIENCE OF THE CONTRACTOR UNDER THE AUTHORITY OF:

CASEY G. WAUTERS, P.E.
TX LIC NO. 93889

11-01-22
DATE

SEE DISCLAIMER FOR LIMITATIONS OF USE.

CONTRACT DOCUMENTS DATED JUNE 10, 2022, AS PART OF THE BIDDING DOCUMENTS (DRAWINGS AND SPECIFICATIONS) AND SUBSEQUENTLY ISSUED ADDENDA HAVE BEEN MERGED INTO ONE CONFORMING SET OF DOCUMENTS FOR THE CONVENIENCE OF THE CONTRACTOR. IF INCONSISTENCIES OR AMBIGUITIES BETWEEN "CONFORMED" DOCUMENTS AND CONTRACT DOCUMENTS ARE FOUND, THE CONTRACT DOCUMENTS SHALL GOVERN.

REV	DATE	BY	DESCRIPTION
			CONFORMED DOCUMENTS

DESIGNED BY
DRAWN AW
CHECKED SGE
DATE FEBRUARY 2022

**
ORIGINAL
SEALED BY
CASEY G. WAUTERS, P.E.
2/28/2022
TX PE 93889
**

AECOM TECHNICAL SERVICES INC.
13640 BRIARWICK DRIVE, SUITE 200
AUSTIN, TEXAS 78729
WWW.AECOM.COM
TBPE REG. NO. F-3580

TBPE No. F-882

CITY OF AUSTIN

CITY OF AUSTIN
WILD HORSE RANCH WWTP EXPANSION
MECHANICAL
RAS PUMP STATION No. 2
MECHANICAL SECTION

VERIFY SCALES
BAR IS ONE INCH ON ORIGINAL DRAWING
0 1"
IF NOT ONE INCH ON THIS SHEET, ADJUST SCALES ACCORDINGLY

JOB NO. 10976A.10
DRAWING NO. 45M03
SHEET NO. 424 OF 464

LAST SAVED BY:

PROJECT NO. 9585A10 FILE NAME: 9585A10_SheetSeed.dgn

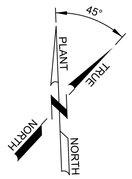

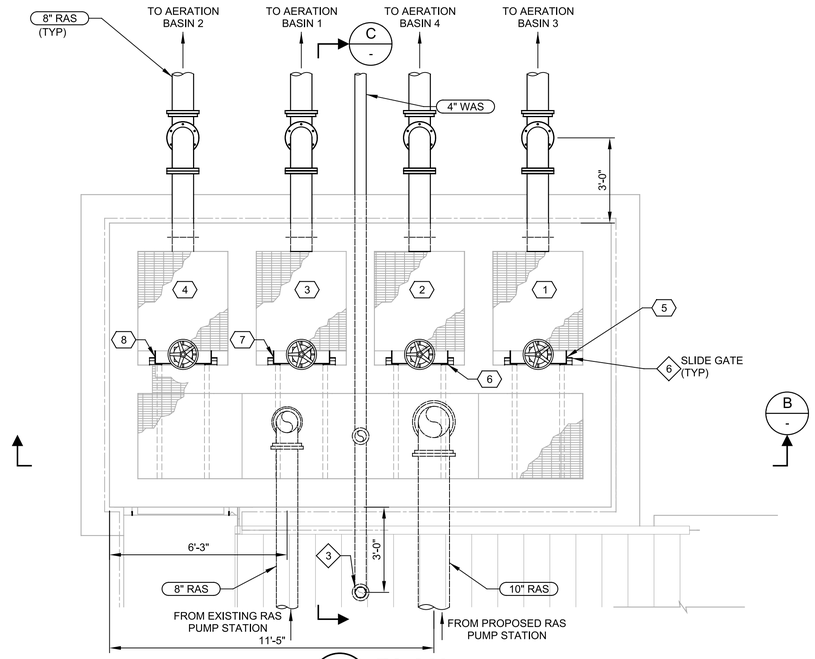

A PLAN
SCALE: 3/8" = 1'-0"
FILE: 10976A1046M101

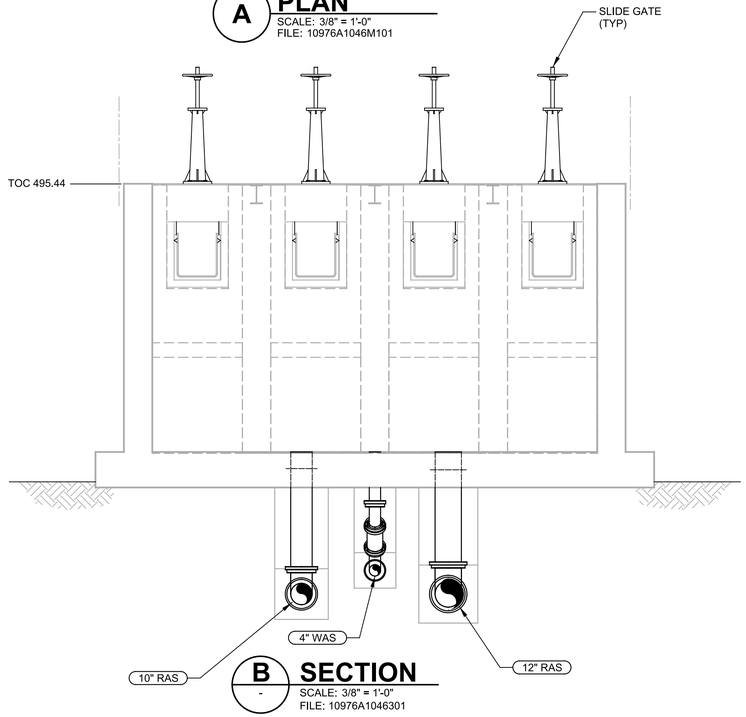

B SECTION
SCALE: 3/8" = 1'-0"
FILE: 10976A1046301

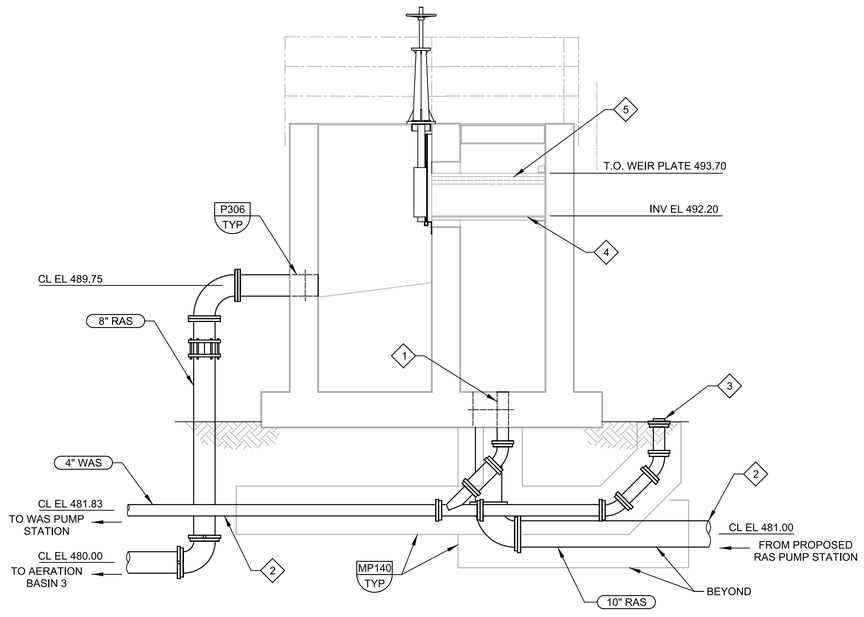

C SECTION
SCALE: 3/8" = 1'-0"
FILE: 10976A1046302

GENERAL NOTES:

1. SEE YARD PIPING SHEETS FOR CONTINUATION OF ALL PIPING.

X KEY NOTES:

1 PIPES PENETRATE FLOOR SLAB PER DETAIL P342/TYP.

2 INSTALL RESTRAINED PUSH-ON JOINT ON PIPE AT A DISTANCE "L" PAST CONCRETE ENCASEMENT, AS SHOWN IN DETAIL P342/TYP.

3 INSTALL CLEANOUT AT GRADE.

4 1'-6" WIDE RECTANGULAR FIBERGLASS TROUGH PER SECTION 13120.

5 EMBEDDED ANGLE STIFFENER EAR.

6 MANUAL SLIDE GATE PER SECTION 11294C, TYPICAL OF 4.

X EQUIPMENT TAGS:

1	AERATION BASIN FLOWBOX NO. 4	AB-FLOWBOX-04
2	AERATION BASIN FLOWBOX NO. 5	AB-FLOWBOX-05
3	AERATION BASIN FLOWBOX NO. 6	AB-FLOWBOX-06
4	AERATION BASIN FLOWBOX NO. 7	AB-FLOWBOX-07
5	AERATION BASIN FLOWBOX 4 SLIDE GATE	AB-FLB4-SG-01
6	AERATION BASIN FLOWBOX 5 SLIDE GATE	AB-FLB5-SG-01
7	AERATION BASIN FLOWBOX 6 SLIDE GATE	AB-FLB6-SG-01
8	AERATION BASIN FLOWBOX 7 SLIDE GATE	AB-FLB7-SG-01

THIS CONFORMED DOCUMENT IS RELEASED FOR THE CONVENIENCE OF THE CONTRACTOR UNDER THE AUTHORITY OF:

11-01-22
DANNY M HURTADO, P.E. — DATE
TX LIC NO. 104266

SEE DISCLAIMER FOR LIMITATIONS OF USE.

CONTRACT DOCUMENTS DATED JUNE 10, 2022, AS PART OF THE BIDDING DOCUMENTS (DRAWINGS AND SPECIFICATIONS) AND SUBSEQUENTLY ISSUED ADDENDA HAVE BEEN MERGED INTO ONE CONFORMING SET OF DOCUMENTS FOR THE CONVENIENCE OF THE CONTRACTOR. IF INCONSISTENCIES OR AMBIGUITIES BETWEEN "CONFORMED" DOCUMENTS AND CONTRACT DOCUMENTS ARE FOUND, THE CONTRACT DOCUMENTS SHALL GOVERN.

REV	DATE	BY	DESCRIPTION
			CONFORMED DOCUMENTS

DESIGNED BMW
DRAWN LGD
CHECKED DMH
DATE NOVEMBER 2022

** ORIGINAL SEALED BY DANNY M. HURTADO 06-10-22 TX PE 104266 **

carollo®
TBPELS No. F-882

CITY OF AUSTIN

CITY OF AUSTIN
WILD HORSE RANCH WWTP EXPANSION
MECHANICAL
RAS SPLITTER BOX
PLAN AND SECTIONS

VERIFY SCALES
BAR IS ONE INCH ON ORIGINAL DRAWING
0 — 1"
IF NOT ONE INCH ON THIS SHEET, ADJUST SCALES ACCORDINGLY

JOB NO. 10976A.00
DRAWING NO. 46M01
SHEET NO. 425 OF 464

PROJECT NO. 10976A10 FILE NAME: 10976A1046M001.dgn

Plot Date: 11-OCT-2022 8:25:48 AM
User: LDietzel
Model: Layout1 ColorTable: gshade.ctb DesignScript: Carollo_Std_Pen_v0905.pen PlotScale: 1:1
LAST SAVED BY: sdwhite

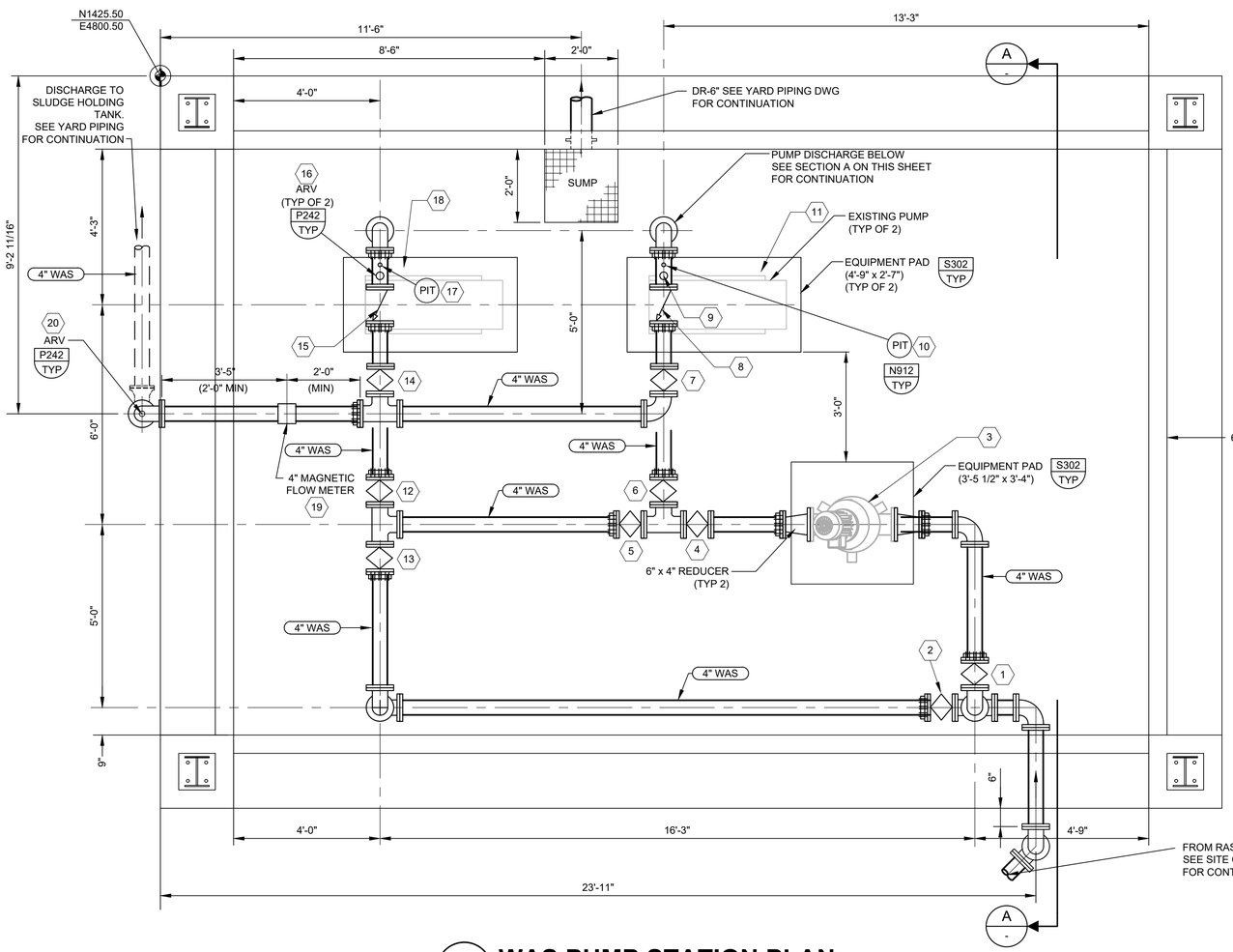

A WAS PUMP STATION PLAN

SCALE: 1/2" = 1'-0"
FILE: 10976A1047S101.DWG

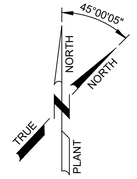

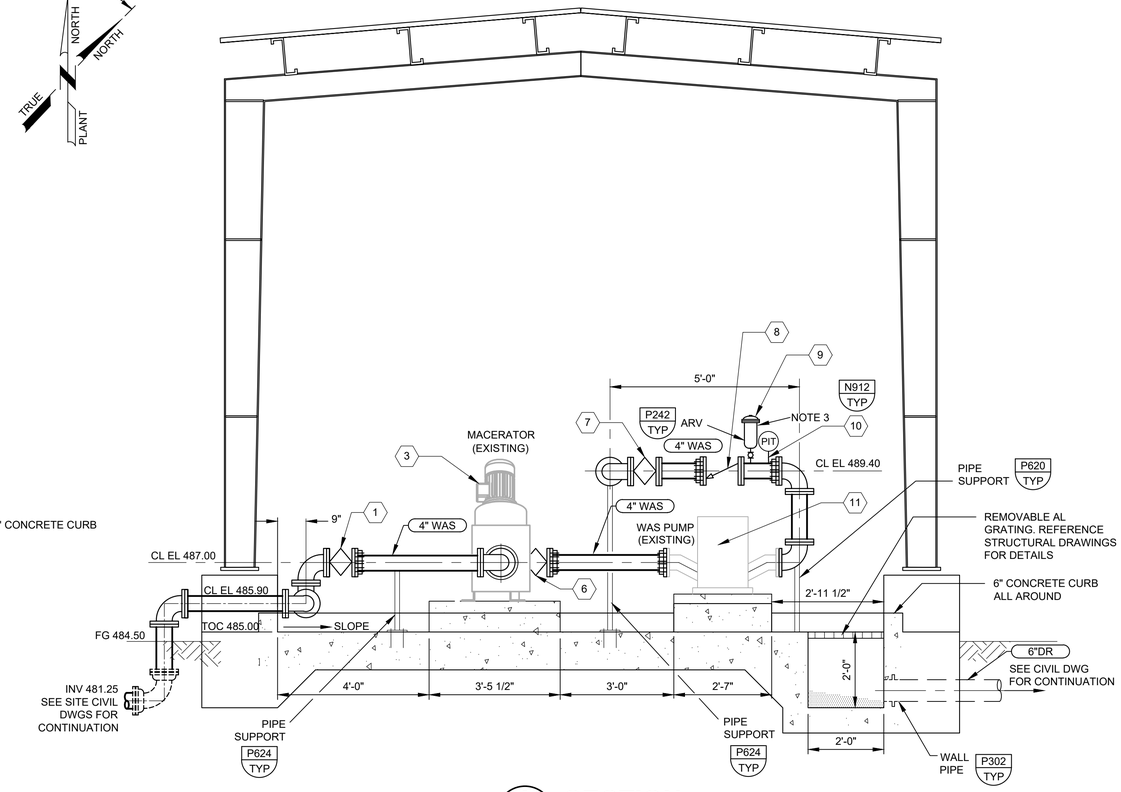

A SECTION

SCALE: 1/2"=1'-0"
FILE: 10976A1047S301.DWG

X	EQUIPMENT TAGS	
1	PLUG VALVE U/S MACERATOR	AB-GR1-PV-01
2	PLUG VALVE I MACERATOR BYPASS	AB-WAPI1-PV-01
3	MACERATOR	AB-GRINDER-01
4	PLUG VALVE D/S MACERATOR	AB-GR1-PV-02
5	PLUG VALVE ISOLATION BTWN PUMPS	AB-GR1-PV-03
6	PLUG VALVE U/S WAS PUMP No. 2	AB-WAPU2-PV-01
7	PLUG VALVE D/S WAS PUMP No. 2	AB-WAPU2-PV-02
8	CHECK VALVE WAS PUMP No. 2	AB-WAPU2-CV-01
9	AIR RELEASE VALVE WAS PUMP No. 2	AB-WAPU2-ARV-01
10	PRESSURE TRANSMITTER WAS PUMP No. 2	AB-WAPU2-PIT-01
11	WAS PUMP No. 2	AB-WASPUMP-02
12	PLUG VALVE U/S WAS PUMP No. 1	AB-WAPU1-PV-01
13	PLUG VALVE 2 MACERATOR BYPASS	AB-WAPI1-PV-02
14	PLUG VALVE D/S WAS PUMP No. 1	AB-WAPU1-PV-02
15	CHECK VALVE WAS PUMP No. 1	AB-WAPU1-CV-01
16	AIR RELEASE VALVE WAS PUMP No. 1	AB-WAPU1-ARV-01
17	PRESSURE TRANSMITTER WAS PUMP No. 1	AB-WAPU1-PIT-01
18	WAS PUMP No. 1	AB-WASPUMP-01
19	WAS FLOW METER	Y-WAPI1-FIT-01
20	AIR RELEASE VALVE D/S FLOWMETER	Y-WAPI1-ARV-01

NOTES:

1. WORK INCLUDES REMOVING OF EXISTING WAS PUMPS AND MACERATOR FROM AN EXISTING WAS PUMP STATION, AND RE-INSTALLING AT THE NEW PUMP STATION AS SHOWN. SEE SHEET 45D01 FOR DETAILS RELATED TO THE DEMOLITION OF WAS PUMPS AND MACERATOR AT THE EXISTING WAS PUMP STATION.
2. COORDINATE THE SIZE OF EQUIPMENT PAD WITH ACTUAL EQUIPMENT ON SITE AND ADJUST THE SIZE OF EQUIPMENT PAD AS NECESSARY TO PROVIDE 6 INCHES OF CLEARANCE ALL AROUND INSTALLED EQUIPMENT.
3. DIRECT DISCHARGE PIPE FROM AIR RELEASE VALVE TO SUMP AND AWAY FROM PUMP SLAB.
4. SEE SITE CIVIL DRAWINGS FOR LOCATION OF AREA WASHDOWN HOSE BIBB FOR THIS FACILITY

THIS CONFORMED DOCUMENT IS RELEASED FOR THE CONVENIENCE OF THE CONTRACTOR UNDER THE AUTHORITY OF:

CASEY G. WAUTERS, P.E.
TX LIC NO. 93889

11-01-22
DATE

SEE DISCLAIMER FOR LIMITATIONS OF USE.

CONTRACT DOCUMENTS DATED JUNE 10, 2022, AS PART OF THE BIDDING DOCUMENTS (DRAWINGS AND SPECIFICATIONS) AND SUBSEQUENTLY ISSUED ADDENDA HAVE BEEN MERGED INTO ONE CONFORMING SET OF DOCUMENTS FOR THE CONVENIENCE OF THE CONTRACTOR. IF INCONSISTENCIES OR AMBIGUITIES BETWEEN "CONFORMED" DOCUMENTS AND CONTRACT DOCUMENTS ARE FOUND, THE CONTRACT DOCUMENTS SHALL GOVERN.

REV	DATE	BY	DESCRIPTION
			CONFORMED DOCUMENTS

DESIGNED BY
DRAWN AW
CHECKED SGE
DATE FEBRUARY 2022

** ORIGINAL SEALED BY CASEY G. WAUTERS, P.E. 2/28/2022 TX PE 93889 **

AECOM TECHNICAL SERVICES INC.
13640 BRIARWICK DRIVE, SUITE 200
AUSTIN, TEXAS 78729
WWW.AECOM.COM
TBPE REG. NO. F-3580

carollo
TBPE No. F-882

CITY OF AUSTIN

CITY OF AUSTIN
WILD HORSE RANCH WWTP EXPANSION
MECHANICAL
WAS PUMP STATION MECHANICAL PLAN

VERIFY SCALES
BAR IS ONE INCH ON ORIGINAL DRAWING
0 1"
IF NOT ONE INCH ON THIS SHEET, ADJUST SCALES ACCORDINGLY

JOB NO. 10976A.10
DRAWING NO. 47M01
SHEET NO. 426 OF 464

LAST SAVED BY:
PROJECT NO. 9585A10
FILE NAME:

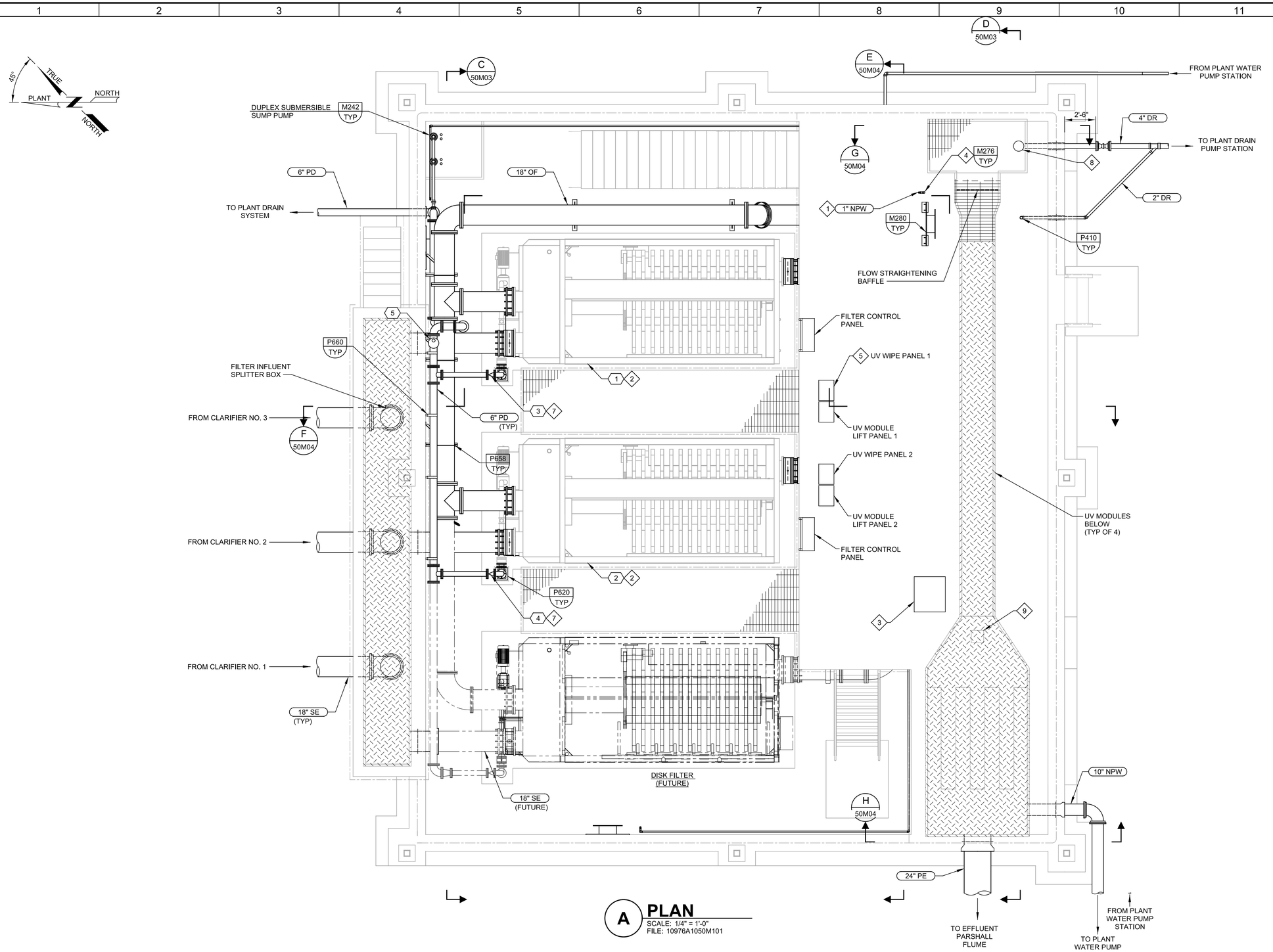

A **PLAN**
SCALE: 1/4" = 1'-0"
FILE: 10976A1050M101

GENERAL NOTES:

1. FOR REHABILITATION OF FILTERS AND FILTER NO. 3 ADDITIVE ALTERNATE, SEE SECTION 11366B.
2. CONTRACTOR SHALL REVIEW UV DISINFECTION SYSTEM SUPPLIER SUBMITTAL FOR ADDITIONAL INSTALLATION DETAILS.
3. UNLESS OTHERWISE SPECIFIED, NEW PIPE SUPPORTS PER SPECIFICATION SECTION 15061.

KEY NOTES:

1 1" NPW PIPE CONTINUED FROM FILTER COMPLEX BELOW. SEE SHEET 50M02 FOR CONTINUATION.

2 EXISTING AQUADISK DISK FILTERS. CONTRACTOR TO COORDINATE WITH FILTER MANUFACTURER FOR INSTALLATION DETAILS. SEE SHEET 50D01 FOR INFORMATION REGARDING TEMPORARY FILTER RELOCATION.

3 PROVIDE AUTOMATIC EFFLUENT SAMPLER FROM TELEDYNE ISCO, MODEL 5800 REFRIGERATED SAMPLER AND MODEL 4B SAMPLER SHELTER, OR EQUAL. INCLUDE 24 ONE LITER POLYPROPYLENE BOTTLES AND 1 TWENTY LITER ROUTE POLYETHYLENE BOTTLE.

4 1" HOSE BIBB ADJACENT TO FREE STANDING HOSE RACK.

5 VENDOR PROVIDED ELECTRIC WIPE CONTROL PANEL AND MODULE LIFT CONTROL BOX.

6 PIPE CONTINUED TO PLANT WATER PUMP STATION ON SHEET 65M01.

7 4" SWING CHECK VALVE, TYPICAL OF 3.

8 UV TRANSMITTANCE METER INSTALLED IN STILLING WELL.

9 ACCESS HATCH FOR GRAB SAMPLING.

10 UV LAMP CLEANING TABLE TO BE PROVIDED BY CONTRACTOR. REFER TO ALLOWANCE IN BID FORM.

EQUIPMENT TAGS:

1	DISK FILTER NO. 1	FLTR-FILTER-01
2	DISK FILTER NO. 2	FLTR-FILTER-02
3	FILTER NO. 1 BACKWASH PUMP CHECK VALVE	FLTR-BWPU1-CV-01
4	FILTER NO. 2 BACKWASH PUMP CHECK VALVE	FLTR-BWPU2-CV-01
5	BACKWASH PIPING COMBINATION AIR VALVE	FLTR-BWPI1-ARV-01

THIS CONFORMED DOCUMENT IS RELEASED FOR THE CONVENIENCE OF THE CONTRACTOR UNDER THE AUTHORITY OF:

11-01-22
DANNY M HURTADO, P.E. DATE
TX LIC NO. 104266

SEE DISCLAIMER FOR LIMITATIONS OF USE.

CONTRACT DOCUMENTS DATED JUNE 10, 2022, AS PART OF THE BIDDING DOCUMENTS (DRAWINGS AND SPECIFICATIONS) AND SUBSEQUENTLY ISSUED ADDENDA HAVE BEEN MERGED INTO ONE CONFORMING SET OF DOCUMENTS FOR THE CONVENIENCE OF THE CONTRACTOR. IF INCONSISTENCIES OR AMBIGUITIES BETWEEN "CONFORMED" DOCUMENTS AND CONTRACT DOCUMENTS ARE FOUND, THE CONTRACT DOCUMENTS SHALL GOVERN.

REV	DATE	BY	DESCRIPTION
			CONFORMED DOCUMENTS

DESIGNED BMW
DRAWN LGD
CHECKED DMH
DATE NOVEMBER 2022

** ORIGINAL SEALED BY DANNY M. HURTADO 06-10-22 TX PE 104266 **

carollo® TBPELS No. F-882

CITY OF AUSTIN FOUNDED 1839 — CITY OF AUSTIN

CITY OF AUSTIN
WILD HORSE RANCH WWTP EXPANSION
MECHANICAL
FILTER / UV DISINFECTION COMPLEX UPPER PLAN

VERIFY SCALES
BAR IS ONE INCH ON ORIGINAL DRAWING
0 1"
IF NOT ONE INCH ON THIS SHEET, ADJUST SCALES ACCORDINGLY

JOB NO. 10976A.00
DRAWING NO. 50M01
SHEET NO. 427 OF 464

Plot Date: 11-OCT-2022 8:27:22 AM
User: LDietzel
PlotScale: 1:1
DesignScript: Carollo_Std_Pen_v0905.pen
ColorTable: gshade.ctb
Model: Layout1
LAST SAVED BY: ldietzel

PROJECT NO. 10976A10 FILE NAME: 10976A1050M001.dgn

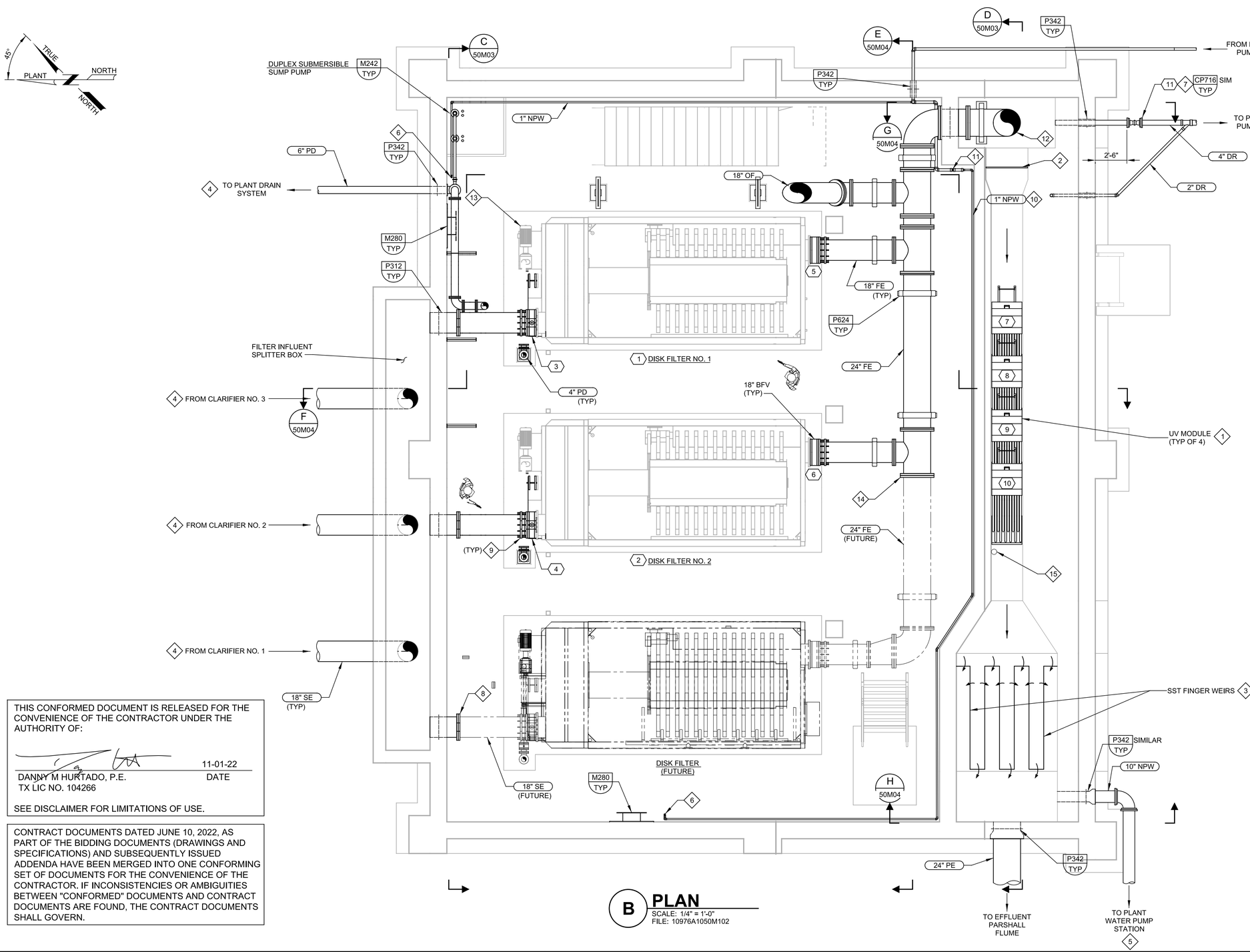

B **PLAN**
SCALE: 1/4" = 1'-0"
FILE: 10976A1050M102

GENERAL NOTES:

1. CONTRACTOR SHALL REVIEW UV DISINFECTION SYSTEM SUPPLIER SUBMITTAL FOR ADDITIONAL INSTALLATION DETAILS.
2. UNLESS OTHERWISE SPECIFIED, NEW PIPE SUPPORTS PER SPECIFICATION SECTION 15061.

(#) KEY NOTES:

1 UV EQUIPMENT (4 BANKS) BY UV DISINFECTION SYSTEM (SECTION 11289) SUPPLIER.

2 STAINLESS STEEL BAFFLE PLATE BY UV DISINFECTION SYSTEM SUPPLIER (SECTION 11289). BAFFLE PLATE SHALL BE REMOVABLE FOR MAINTENANCE/CLEANING. MOUNTING DETAILS PER UV DISIFECTION SUPPLIER.

3 STAINLESS STEEL FINGER WEIRS BY UV DISINFECTION SYSTEM (SECTION 11289) SUPPLIER. SEE STRUCTURAL DRAWINGS FOR WEIR INSTALLATION DETAILS.

4 SEE YARD PIPING SHEETS FOR CONTINUATION.

5 PIPE CONTINUED TO PLANT WATER PUMP STATION ON SHEET 65M01.

6 3/4" HOSE BIBB ADJACENT TO WALL MOUNTED HOSE RACK.

7 4" PLUG VALVE WITH MECHANICAL JOINTS. INSTALL VALVE IN VALVE BOX.

8 INSTALL 18" BLIND FLANGE ON WALL PIPE FOR FUTURE CONNECTION TO THIRD DISK FILTER.

9 FLEXIBLE COUPLING, TYPICAL.

10 NPW PIPE ROUTED ALONG WALL OF FILTER COMPLEX AT AN APPROXIMATE CENTERLINE ELEVATION OF 477.00. SUPPORT NPW PIPE ALONG WALL PER DETAIL P664/TYP.

11 2" TEE ROTATED UP. 2" X 1" REDUCERS ON WEST AND TOP SIDES OF TEE. 1" PIPE ROUTED UP THROUGH CONCRETE SLAB ABOVE PER DETAIL P304/TYP. SUPPORT VERTICAL PIPE ALONG WALL PER DETAIL P662/TYP.

12 24" CUSTOM TEE, SEE SECTION G ON SHEET 50M04 FOR MORE INFORMATION.

13 EXISTING FILTER BACKWASH PUMP, INTEGRAL TO DISK FILTER PACKAGE, TYPICAL OF 2.

14 24" BLIND FLANGE.

15 LEVEL SWITCH PROVIDED BY MANUFACTURER.

(X) EQUIPMENT TAGS:

1	DISK FILTER NO. 1	FLTR-FILTER-01
2	DISK FILTER NO. 2	FLTR-FILTER-02
3	FILTER NO. 1 INFLUENT BUTTERFLY VALVE	FLTR-F1-BFV-01
4	FILTER NO. 2 INFLUENT BUTTERFLY VALVE	FLTR-F2-BFV-01
5	FILTER NO. 1 EFFLUENT BUTTERFLY VALVE	FLTR-F1-BFV-02
6	FILTER NO. 2 EFFLUENT BUTTERFLY VALVE	FLTR-F2-BFV-02
7	UV BANK NO. 1	FLTR-UVBANK-01
8	UV BANK NO. 2	FLTR-UVBANK-02
9	UV BANK NO. 3	FLTR-UVBANK-03
10	UV BANK NO. 4	FLTR-UVBANK-04
11	UV CHANNEL DRAIN PLUG VALVE	FLTR-UV-PV-01

THIS CONFORMED DOCUMENT IS RELEASED FOR THE CONVENIENCE OF THE CONTRACTOR UNDER THE AUTHORITY OF:

11-01-22
DANNY M HURTADO, P.E. DATE
TX LIC NO. 104266

SEE DISCLAIMER FOR LIMITATIONS OF USE.

CONTRACT DOCUMENTS DATED JUNE 10, 2022, AS PART OF THE BIDDING DOCUMENTS (DRAWINGS AND SPECIFICATIONS) AND SUBSEQUENTLY ISSUED ADDENDA HAVE BEEN MERGED INTO ONE CONFORMING SET OF DOCUMENTS FOR THE CONVENIENCE OF THE CONTRACTOR. IF INCONSISTENCIES OR AMBIGUITIES BETWEEN "CONFORMED" DOCUMENTS AND CONTRACT DOCUMENTS ARE FOUND, THE CONTRACT DOCUMENTS SHALL GOVERN.

REV	DATE	BY	DESCRIPTION
			CONFORMED DOCUMENTS

DESIGNED BMW
DRAWN LGD
CHECKED DMH
DATE NOVEMBER 2022

** ORIGINAL SEALED BY DANNY M. HURTADO 06-10-22 TX PE 104266 **

carollo® TBPELS No. F-882

CITY OF AUSTIN — FOUNDED 1839 — CITY OF AUSTIN

CITY OF AUSTIN
WILD HORSE RANCH WWTP EXPANSION
MECHANICAL
FILTER / UV DISINFECTION COMPLEX LOWER PLAN

VERIFY SCALES
BAR IS ONE INCH ON ORIGINAL DRAWING
0 1"
IF NOT ONE INCH ON THIS SHEET, ADJUST SCALES ACCORDINGLY

JOB NO. 10976A.00
DRAWING NO. 50M02
SHEET NO. 428 OF 464

PROJECT NO. 10976A10 FILE NAME: 10976A1050M002.dgn

LAST SAVED BY: ldietzel PlotScale: 1:1 Model: Layout1 ColorTable: gshade.ctb DesignScript: Carollo_Std_Pen_v0905.pen User: LDietzel Plot Date: 11-OCT-2022 8:29:02 AM

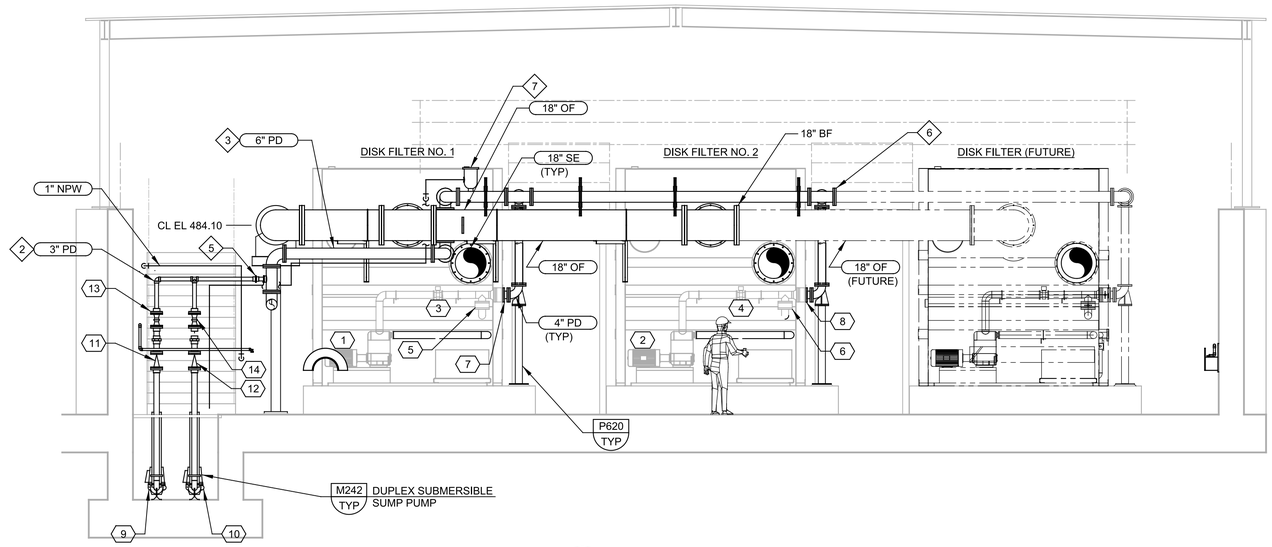

C SECTION

50M01

SCALE: 1/4" = 1'-0"
FILE: 1076A1050M301

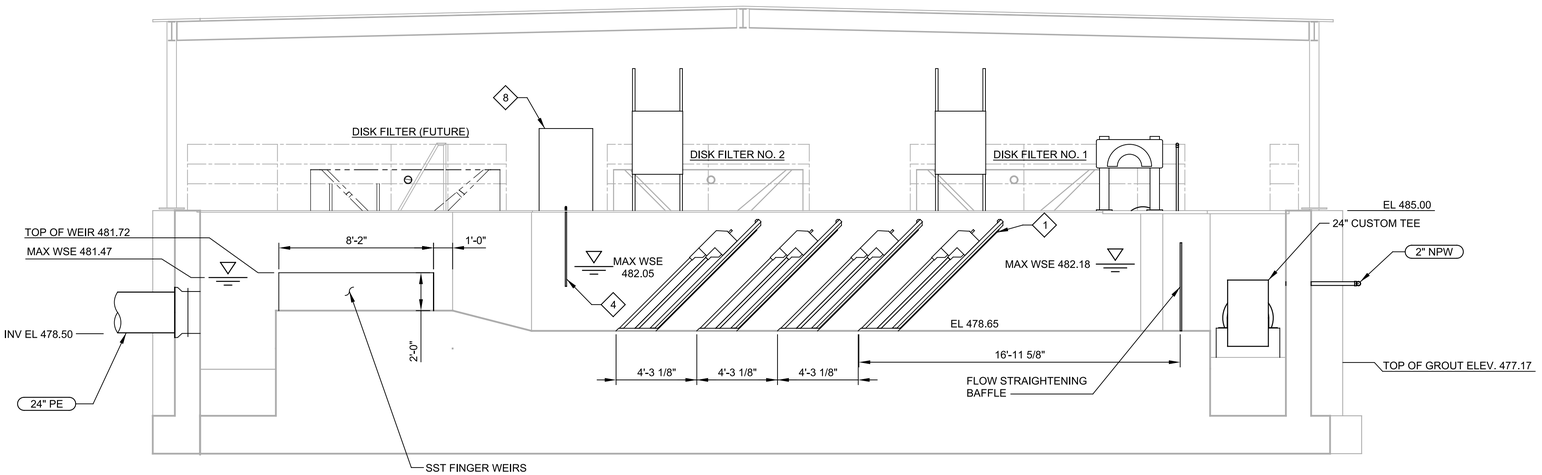

D SECTION

50M01

SCALE: 1/4" = 1'-0"
FILE: 1076A1050M302

GENERAL NOTES:

1. CONTRACTOR SHALL REVIEW UV DISINFECTION SYSTEM SUPPLIER SUBMITTAL FOR ADDITIONAL INSTALLATION DETAILS.
2. UNLESS OTHERWISE SPECIFIED, NEW PIPE SUPPORTS PER SPECIFICATION SECTION 15061.

(#) KEY NOTES:

1 UV MODULE (TYP OF 4).
2 SUPPORT PIPE ALONG WALL PER DETAIL P662/TYP.
3 SUPPORT PIPE ALONG WALL PER DETAIL P658/TYP.
4 AUTOSAMPLER SUCTION PIPING.
5 6" X 3" REDUCING TEE.
6 6" BLIND FLANGE.
7 2" COMBINATION AIR VALVE.
8 EFFLUENT AUTOSAMPLER.

(X) EQUIPMENT TAGS:

1	FILTER NO. 1 BACKWASH PUMP	FLTR-BACKWASHPUMP-01
2	FILTER NO. 2 BACKWASH PUMP	FLTR-BACKWASHPUMP-02
3	FILTER NO. 1 BACKWASH PUMP FLOW METER	FLTR-BWPU1-FIT-01
4	FILTER NO. 2 BACKWASH PUMP FLOW METER	FLTR-BWPU2-FIT-01
5	FILTER NO. 1 BACKWASH PUMP BUTTERFLY VALVE 1	FLTR-BWPU1-BFV-01
6	FILTER NO. 2 BACKWASH PUMP BUTTERFLY VALVE 1	FLTR-BWPU2-BFV-01
7	FILTER NO. 1 BACKWASH PUMP BUTTERFLY VALVE 2	FLTR-BWPU1-BFV-02
8	FILTER NO. 2 BACKWASH PUMP BUTTERFLY VALVE 2	FLTR-BWPU2-BFV-02
9	SUMP PUMP NO. 1	FLTR-SUMPPUMP-01
10	SUMP PUMP NO. 2	FLTR-SUMPPUMP-02
11	SUMP PUMP NO. 1 CHECK VALVE	FLTR-SP1-CV-01
12	SUMP PUMP NO. 2 CHECK VALVE	FLTR-SP2-CV-01
13	SUMP PUMP NO. 1 PLUG VALVE	FLTR-SP1-PV-01
14	SUMP PUMP NO. 2 PLUG VALVE	FLTR-SP2-PV-01

THIS CONFORMED DOCUMENT IS RELEASED FOR THE CONVENIENCE OF THE CONTRACTOR UNDER THE AUTHORITY OF:

DANNY M HURTADO, P.E.
TX LIC NO. 104266

11-01-22
DATE

SEE DISCLAIMER FOR LIMITATIONS OF USE.

CONTRACT DOCUMENTS DATED JUNE 10, 2022, AS PART OF THE BIDDING DOCUMENTS (DRAWINGS AND SPECIFICATIONS) AND SUBSEQUENTLY ISSUED ADDENDA HAVE BEEN MERGED INTO ONE CONFORMING SET OF DOCUMENTS FOR THE CONVENIENCE OF THE CONTRACTOR. IF INCONSISTENCIES OR AMBIGUITIES BETWEEN "CONFORMED" DOCUMENTS AND CONTRACT DOCUMENTS ARE FOUND, THE CONTRACT DOCUMENTS SHALL GOVERN.

REV	DATE	BY	DESCRIPTION
			CONFORMED DOCUMENTS

DESIGNED BMW
DRAWN LGD
CHECKED DMH
DATE NOVEMBER 2022

** ORIGINAL SEALED BY DANNY M. HURTADO 06-10-22 TX PE 104266 **

carollo
TBPELS No. F-882

CITY OF AUSTIN
FOUNDED 1839

CITY OF AUSTIN

CITY OF AUSTIN
WILD HORSE RANCH WWTP EXPANSION
MECHANICAL
FILTER / UV DISINFECTION COMPLEX SECTIONS - 1

VERIFY SCALES
BAR IS ONE INCH ON ORIGINAL DRAWING
0 1"
IF NOT ONE INCH ON THIS SHEET, ADJUST SCALES ACCORDINGLY

JOB NO. 10976A.00
DRAWING NO. 50M03
SHEET NO. 429 OF 464

PROJECT NO. 10976A10 FILE NAME: 10976A1050M003.dgn

Plot Date: 11-OCT-2022 8:32:14 AM
User: LDietzel
PlotScale: 1:1
DesignScript: Carollo_Std_Pen_v0905.pen
ColorTable: gshade.ctb
Model: Layout1
LAST SAVED BY: ldietzel

Plot Date: 11-OCT-2022 8:34:11 AM
User: LDietzel
PlotScale: 1:1
DesignScript: Carollo_Std_Pen_v0905.pen
ColorTable: gshade.ctb
Model: Layout1
LAST SAVED BY: ldietzel

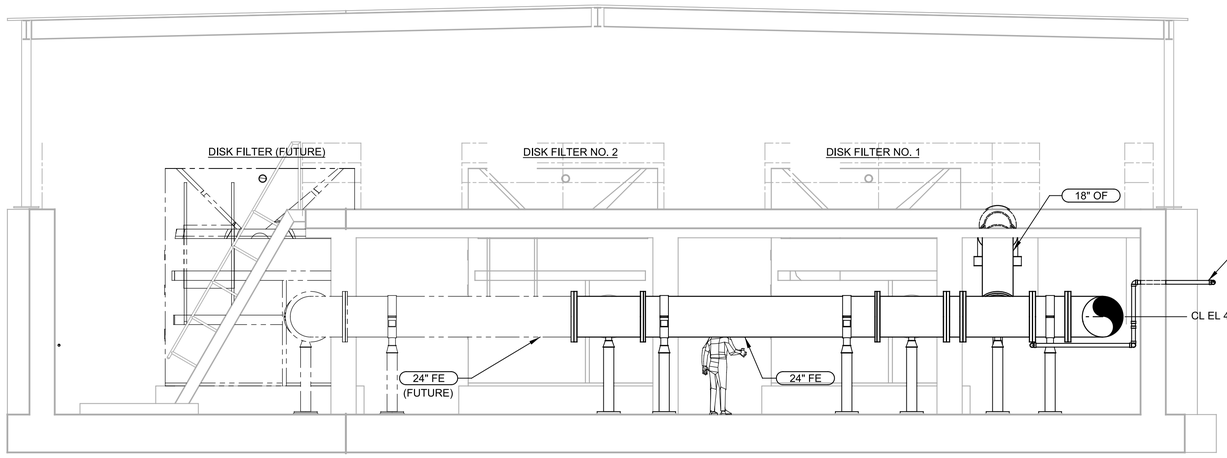

E SECTION
50M01
SCALE: 1/4" = 1'-0"
FILE: 1076A1050M303

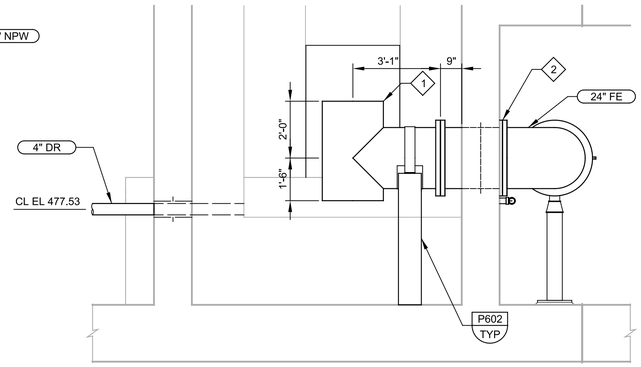

G SECTION
50M02
SCALE: 3/8" = 1'-0"
FILE: 1076A1050M306

GENERAL NOTES:

1. CONTRACTOR SHALL REVIEW UV DISINFECTION SYSTEM SUPPLIER SUBMITTAL FOR ADDITIONAL INSTALLATION DETAILS.
2. UNLESS OTHERWISE SPECIFIED, NEW PIPE SUPPORTS PER SPECIFICATION SECTION 15061.

KEY NOTES:

1 CUSTOM 24" PAINTED STEEL TEE CENTERED AT THE CENTERLINE OF THE UV CHANNEL INFLUENT BOX.

2 PAINTED STEEL WALL THIMBLE WITH TAPPED FLANGE ON NORTH SIDE OF WALL, SIMILAR TO TYPICAL DETAIL P314/TYP AND FLANGED END ON SOUTH SIDE OF WALL, SIMILAR TO DETAIIL P312/TYP. DIELECTRIC ISOLATOR BETWEEN DISSIMILAR PIPE MATERIALS.

3 STEEL PIPE SUPPORT, SEE TO DETAIL 5 ON SHEET 30S05.

4 FINGER WEIRS PROVIDED BY UV MANUFACTURER.

THIS CONFORMED DOCUMENT IS RELEASED FOR THE CONVENIENCE OF THE CONTRACTOR UNDER THE AUTHORITY OF:

11-01-22
DANNY M HURTADO, P.E. DATE
TX LIC NO. 104266

SEE DISCLAIMER FOR LIMITATIONS OF USE.

CONTRACT DOCUMENTS DATED JUNE 10, 2022, AS PART OF THE BIDDING DOCUMENTS (DRAWINGS AND SPECIFICATIONS) AND SUBSEQUENTLY ISSUED ADDENDA HAVE BEEN MERGED INTO ONE CONFORMING SET OF DOCUMENTS FOR THE CONVENIENCE OF THE CONTRACTOR. IF INCONSISTENCIES OR AMBIGUITIES BETWEEN "CONFORMED" DOCUMENTS AND CONTRACT DOCUMENTS ARE FOUND, THE CONTRACT DOCUMENTS SHALL GOVERN.

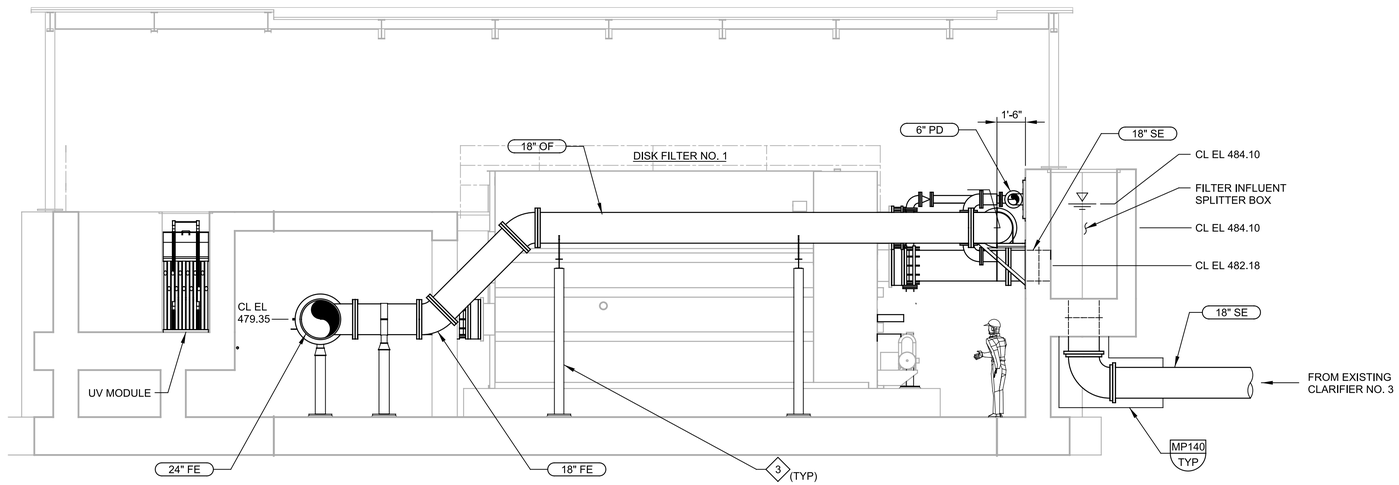

F SECTION
50M01
SCALE: 1/4" = 1'-0"
FILE: 1076A1050M304

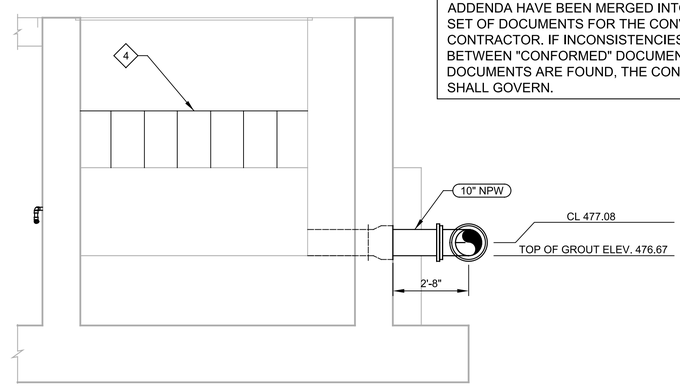

H SECTION
50M02
SCALE: 3/8" = 1'-0"
FILE: 1076A1050M305

REV	DATE	BY	DESCRIPTION
			CONFORMED DOCUMENTS

DESIGNED BMW
DRAWN LGD
CHECKED DMH
DATE NOVEMBER 2022

** ORIGINAL SEALED BY DANNY M. HURTADO 06-10-22 TX PE 104266 **

carollo® TBPELS No. F-882

CITY OF AUSTIN FOUNDED 1839

CITY OF AUSTIN

CITY OF AUSTIN
WILD HORSE RANCH WWTP EXPANSION
MECHANICAL
FILTER / UV DISINFECTION COMPLEX SECTIONS - 2

VERIFY SCALES
BAR IS ONE INCH ON ORIGINAL DRAWING
0 1"
IF NOT ONE INCH ON THIS SHEET, ADJUST SCALES ACCORDINGLY

JOB NO. 10976A.00
DRAWING NO. 50M04
SHEET NO. 430 OF 464

PROJECT NO. 10976A10 FILE NAME: 10976A1050M004.dgn

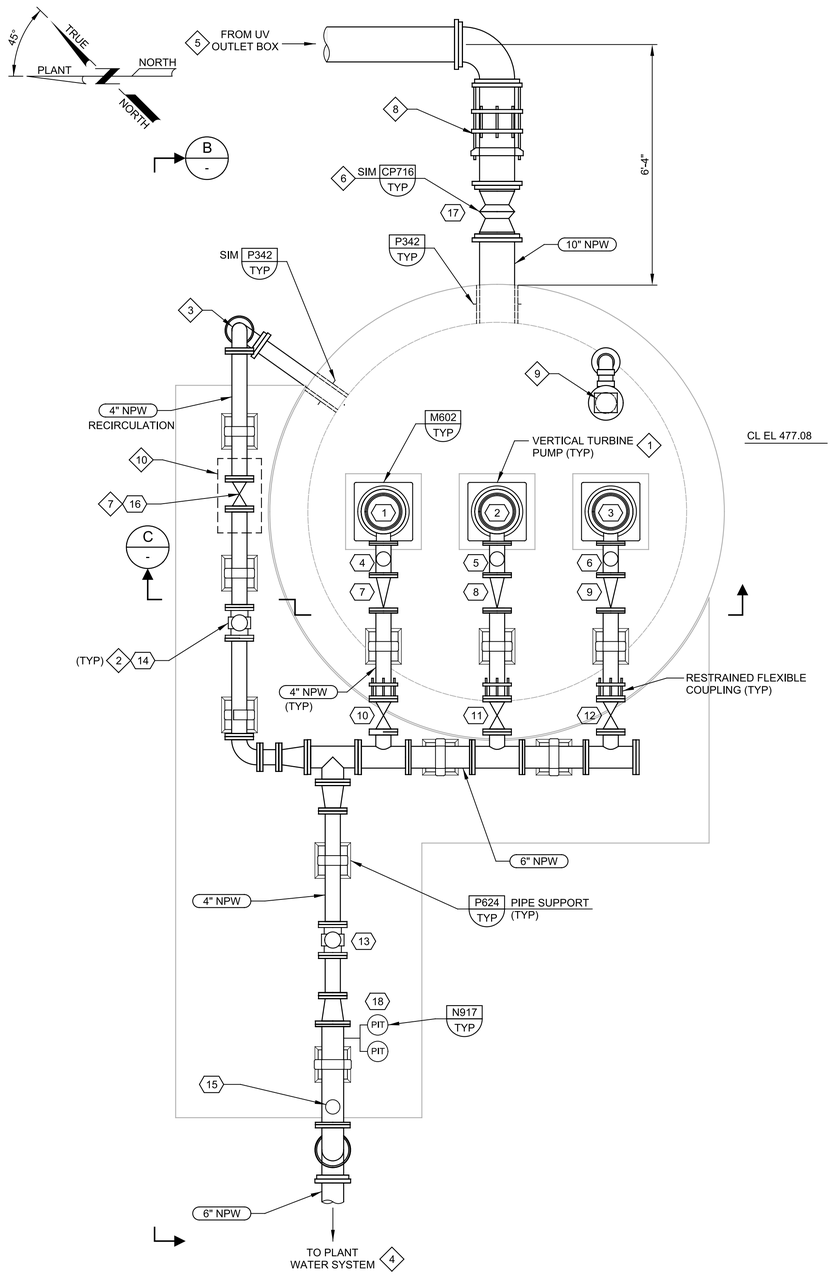

A PLAN

SCALE: 1/2' = 1'-0"
FILE: 10976A1065M101

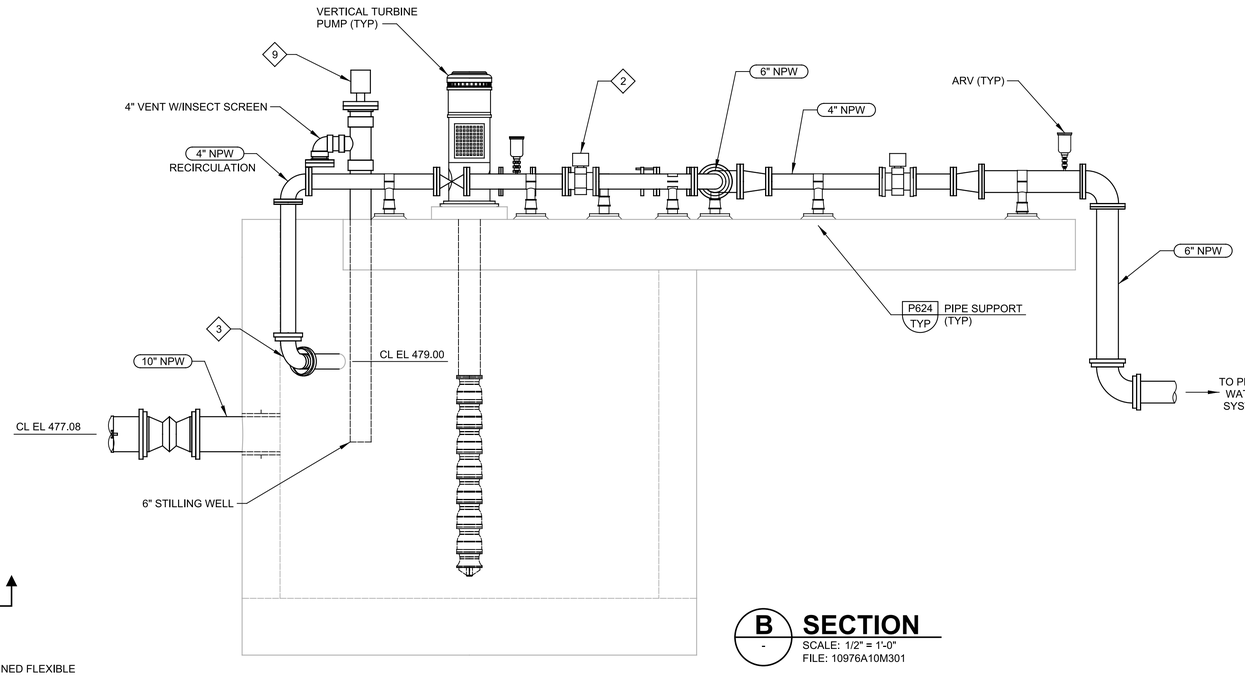

B SECTION

SCALE: 1/2" = 1'-0"
FILE: 10976A10M301

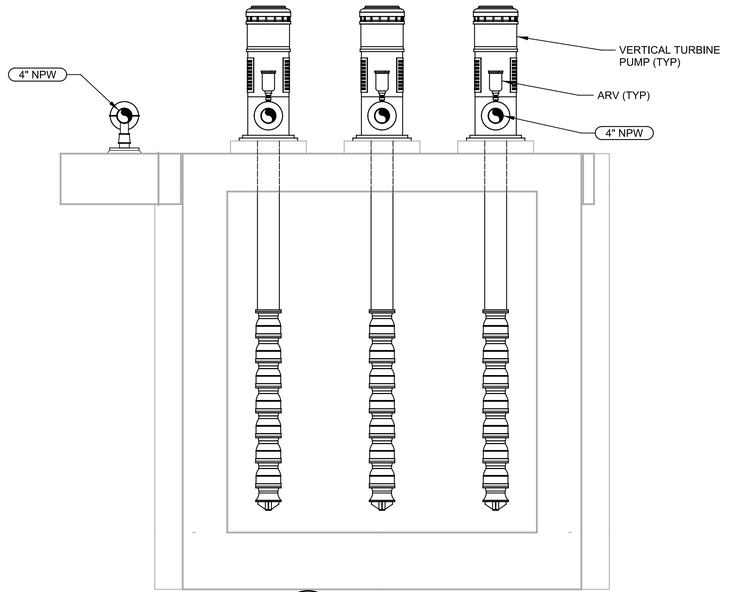

C SECTION

SCALE: 1/2" = 1'-0"
FILE: 10976A10M302

KEY NOTES:

#	
1	VERTICAL TURBINE PUMP, TYPICAL OF 3, PER SECTION 11312D.
2	4 INCH MAGNETIC FLOW METER, TYPICAL OF 2.
3	MECHANICALLY RESTRAINED 90 DEGREE BEND ON BURIED NPW RECIRCULATION PIPE.
4	SEE YARD PIPING SHEETS FOR CONTINUATION.
5	CONTINUED ON SHEET 50M02.
6	6" PLUG VALVE WITH MECHANICAL JOINTS.
7	PRESSURE SUSTAINING/RELIEF VALVE SET TO 90 PSIG.
8	RESTRAINED FLEXIBLE COUPLING.
9	LOW LEVEL FLOAT SWITCH INSTALLED IN STILLING WELL.
10	PROVIDE HEATED VALVE ENCLOSURE. CONTRACTOR SHALL COORDINATE SIZE WITH VALVE MANUFACTURER. ENCLOSURE SHALL BE HOT BOX MODEL HB2 BY HUBBELL, OR EQUAL.

EQUIPMENT TAGS:

X		
1	PLANT WATER PUMP NO. 1	FLTR-NPWPUMP-01
2	PLANT WATER PUMP NO. 2	FLTR-NPWPUMP-02
3	PLANT WATER PUMP NO. 3	FLTR-NPWPUMP-03
4	PLANT WATER PUMP NO. 1 AIR RELEASE VALVE	FLTR-NPWP1-ARV-01
5	PLANT WATER PUMP NO. 2 AIR RELEASE VALVE	FLTR-NPWP2-ARV-01
6	PLANT WATER PUMP NO. 3 AIR RELEASE VALVE	FLTR-NPWP3-ARV-01
7	PLANT WATER PUMP NO. 1 CHECK VALVE	FLTR-NPWP1-CV-01
8	PLANT WATER PUMP NO. 2 CHECK VALVE	FLTR-NPWP2-CV-01
9	PLANT WATER PUMP NO. 3 CHECK VALVE	FLTR-NPWP3-CV-01
10	PLANT WATER PUMP NO. 1 ISOLATION GATE VALVE	FLTR-NPWP1-GV-01
11	PLANT WATER PUMP NO. 2 ISOLATION GATE VALVE	FLTR-NPWP2-GV-01
12	PLANT WATER PUMP NO. 3 ISOLATION GATE VALVE	FLTR-NPWP3-GV-01
13	PLANT WATER DISCHARGE HEADER FLOW METER	FLTR-NPWI1-FIT-01
14	PLANT WATER RECIRCULATION FLOW METER	FLTR-NPWI2-FIT-01
15	PLANT WATER DISCHARGE HEADER ARV	FLTR-NPWI1-ARV-01
16	PLANT WATER RECIRCULATION PRESSURE SUSTAINING/RELIEF VALVE	FLTR-NPWI2-PRLV-01
17	PLANT WATER PUMP STATION INFLUENT PLUG VALVE	FLTR-NPWP-PV-01
18	PLANT WATER PRESSURE INDICATING TRANSMITTER	FLTR-NPWI1-PIT-01

THIS CONFORMED DOCUMENT IS RELEASED FOR THE CONVENIENCE OF THE CONTRACTOR UNDER THE AUTHORITY OF:

DANNY M HURTADO, P.E.
TX LIC NO. 104266

11-01-22
DATE

SEE DISCLAIMER FOR LIMITATIONS OF USE.

CONTRACT DOCUMENTS DATED JUNE 10, 2022, AS PART OF THE BIDDING DOCUMENTS (DRAWINGS AND SPECIFICATIONS) AND SUBSEQUENTLY ISSUED ADDENDA HAVE BEEN MERGED INTO ONE CONFORMING SET OF DOCUMENTS FOR THE CONVENIENCE OF THE CONTRACTOR. IF INCONSISTENCIES OR AMBIGUITIES BETWEEN "CONFORMED" DOCUMENTS AND CONTRACT DOCUMENTS ARE FOUND, THE CONTRACT DOCUMENTS SHALL GOVERN.

REV	DATE	BY	DESCRIPTION
			CONFORMED DOCUMENTS

DESIGNED BMW
DRAWN LGD
CHECKED DMH
DATE NOVEMBER 2022

** ORIGINAL SEALED BY DANNY M. HURTADO 06-10-22 TX PE 104266 **

carollo®
TBPELS No. F-882

CITY OF AUSTIN
FOUNDED 1839

CITY OF AUSTIN

CITY OF AUSTIN
WILD HORSE RANCH WWTP EXPANSION
MECHANICAL
PLANT WATER PUMP STATION
PLAN AND SECTIONS

VERIFY SCALES
BAR IS ONE INCH ON ORIGINAL DRAWING
0 1"
IF NOT ONE INCH ON THIS SHEET, ADJUST SCALES ACCORDINGLY

JOB NO. 10976A.00
DRAWING NO. 65M01
SHEET NO. 431 OF 464

PROJECT NO. 10976A10 FILE NAME: 10976A1065M001.dgn

Plot Date: 11-OCT-2022 8:36:51 AM
User: LDietzel
PlotScale: 1:1
DesignScript: Carollo_Std_Pen_v0905.pen
ColorTable: gshade.ctb
Model: Layout1
LAST SAVED BY: ldietzel

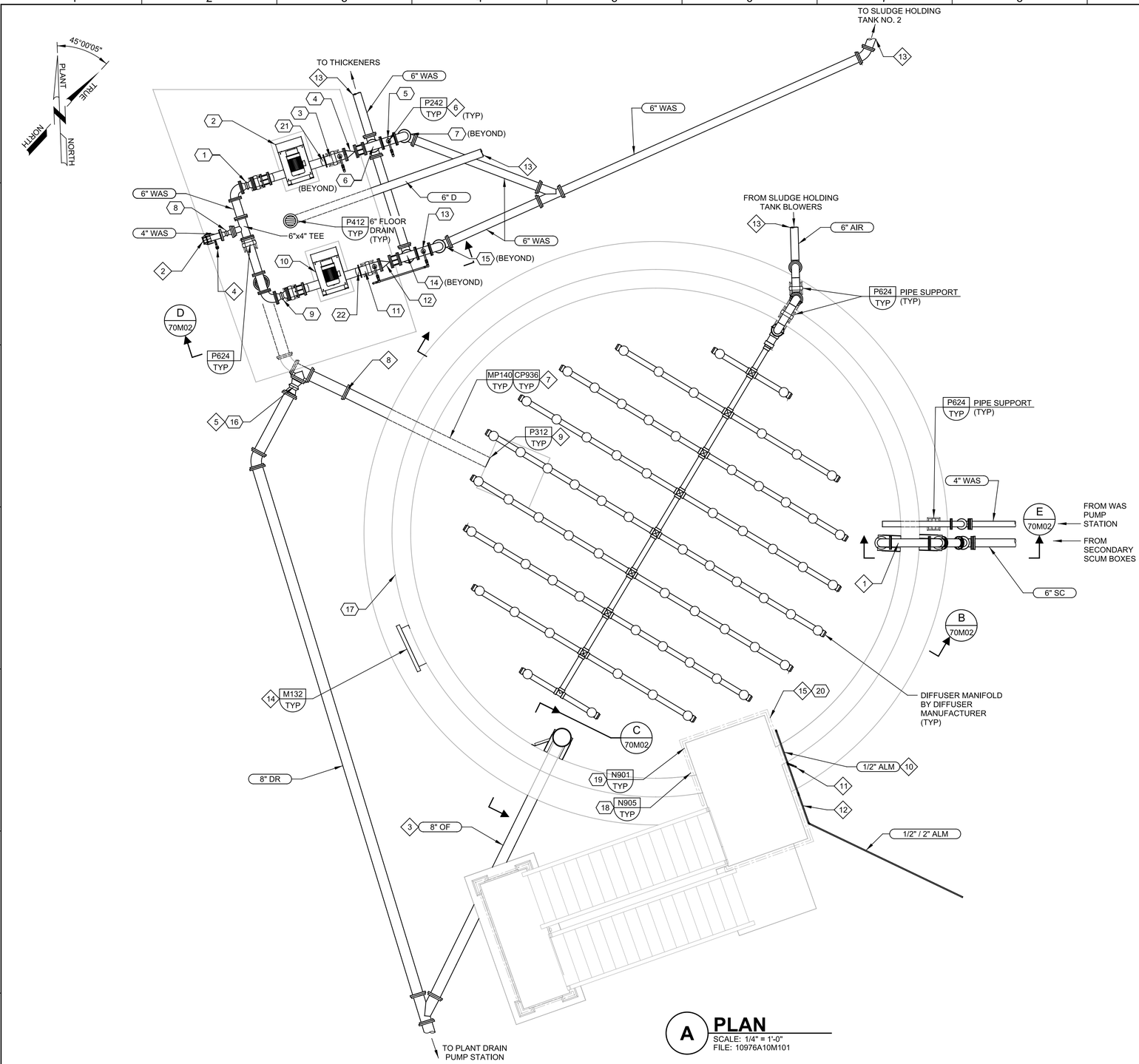

A **PLAN**
SCALE: 1/4" = 1'-0"
FILE: 10976A10M101

GENERAL NOTES:

1. REFER TO CIVIL SHEETS FOR PIPING CONTINUATION IN THE YARD.
2. UNDERGROUND ALUM PIPING TO BE DOUBLE CONTAINED PER SPECIFICATION 15293 - DOUBLE CONTAINMENT PIPING.

KEY NOTES:

1 INSTALL 1/2" WELDOLET AND 1/2" GSP ON TOP OF DISCHARGE PIPING FOR AIR RELEASE. DISCHARGE OF 1/2" AIR RELEASE PIPE SHALL BE IN SLUDGE HOLDING TANK AND TERMINATE 6" BELOW TOP OF WALL.

2 INSTALL 4" FEMALE CAMLOCK FITTING FOR TRUCK DISPOSAL.

3 CONCRETE ENCASE PIPE PER C936 AND EXTEND CONCRETE ENCASEMENT A MINIMUM 3 FEET FROM UNDERNEATH SLUDGE HOLDING TANK. INSTALL RESTRAINED DIP FLEXIBLE CONNECTION AT ENCASEMENT TERMINATION PER TYPICAL DETAIL P342.

4 INSTALL 3/4" THREADED BOSS WITH BALL VALVE AND 3/4" TWO LUG AIR CONNECTOR.

5 INSTALL BURIED PLUG VALVE WITH VALVE BOX AT GRADE PER CIVIL TYPICAL DETAILS.

6 FIELD ROUTE ARV DRAIN PIPING TO FLOOR DRAIN PER TYPICAL DETAIL P242. ALL ARV DRAIN PIPES SIMILAR.

7 EXTEND CONCRETE ENCASEMENT 1 FOOT FROM UNDERNEATH SLUDGE HOLDING TANK FOUNDATION. INSTALL RESTRAINED PUSH-ON WALL PIPE AT ENCASEMENT TERMINATION.

8 INSTALL RESTRAINED PUSH-ON JOINT HALFWAY BETWEEN TEE AND CONCRETE ENCASEMENT TERMINATION.

9 PLAIN END PIPE TERMINATION AT INSIDE EDGE OF SLUDGE HOLDING TANK DRAIN BOX.

10 EXTEND ALUM PIPING AT LEAST 1' OVER INTERIOR OF SLUDGE HOLDING TANK. ALUM PIPING BENDS DOWN AND EXTENDS AT LEAST 6" INTO SLUDGE HOLDING TANK. SUPPORT PIPE ON AND OVER WALL PER TYPICAL DETAIL P660.

11 INSTALL ISOLATION BALL VALVE AT 4' ABOVE FINISHED GRADE. INSTALL TEE, 1" BALL VALVE, AND 1" FEMALE HOSE CONNECTION FOR DRAINING/FLUSHING.

12 SLOPE ALUM PIPING TO SHT 1 AND INSTALL ACCESS/INSPECTION PORT IN DOUBLE CONTAINMENT PIPING AT VERTICAL ELBOW. INSTALL TERMINATION FITTING FOR TRANSITION FROM DOUBLE CONTAINMENT PIPING TO SINGLE WALL PIPING.

13 REFER TO 75M03 FOR CONTINUATION.

14 CENTERLINE OF ACCESS HATCH SHALL BE 3' AFF.

15 INSTALL DO PROBE WITH HACH CHAIN MOUNT KIT, MODEL LZX914.99.11200 OR ENGINEER APPROVED EQUAL. MOUNT EQUIPMENT AND CABLE SO ALL EQUIPMENT IS ACCESSIBLE FROM PLATFORM. MOUNTING KIT SHALL BE SIZED SUCH THAT PROBE IS AT LEAST 10 FEET BELOW TOP OF WALL.

EQUIPMENT TAGS:

1	THICKENER FEED PUMP NO. 1 SUCTION ISOLATION PLUG VALVE	SHF-SLPU1-PV-01
2	THICKENER FEED PUMP NO. 1	SHF-SLUDGEPUMP-01
3	THICKENER FEED PUMP NO. 1 ARV-1	SHF-SLPU1-ARV-01
4	THICKENER FEED PUMP NO. 1 CHECK VALVE	SHF-SLPU1-CV-01
5	THICKENER VEED PUMP NO. 1 ARV-2	SHF-SLPU1-ARV-02
6	THICKENER FEED PUMP NO. 1 DISCHARGE ISOLATION PLUG VALVE	SHF-SLPU1-PV-02
7	THICKENER FEED PUMP NO. 1 BYPASS ISOLATION VALVE	SHF-SLPU1-PV-03
8	SLUDGE TRUCK LOADING PLUG VALVE	SHF-SLPI1-PV-01
9	THICKENER FEED PUMP NO. 2 SUCTION ISOLATION PLUG VALVE	SHF-SLPU2-PV-01
10	THICKENER FEED PUMP NO. 2	SHF-SLUDGEPUMP-02
11	THICKENER FEED PUMP NO. 2 ARV-1	SHF-SLPU2-ARV-01
12	THICKENER FEED PUMP NO. 2 CHECK VALVE	SHF-SLPU2-CV-01
13	THICKENER FEED PUMP NO. 2 ARV-2	SHF-SLPU2-ARV-02
14	THICKENER FEED PUMP NO. 2 DISCHARGE ISOLATION PLUG VALVE	SHF-SLPU2-PV-02
15	THICKENER FEED PUMP NO. 2 BYPASS ISOLATION VALVE	SHF-SLPU2-PV-03
16	SHT NO. 1 DRAIN VALVE	Y-SLPI1-PV-01
17	SLUDGE HOLDING TANK NO. 1	SHF-SLUDGEBASIN-01
18	SHT NO. 1 HIGH LEVEL SWITCH	SHF-SLB1-LSH-01
19	SHT NO. 1 LEVEL INDICATING TRANSMITTER	SHF-SLB1-LIT-01
20	SHT NO. 1 DO PROBE	SHF-SLB1-AIT-01
21	THICKENER FEED PUMP NO. 1 HIGH PRESSURE SWITCH	SHF-SLPU1-PSH-01
22	THICKENER FEED PUMP NO. 2 HIGH PRESSURE SWITCH	SHF-SLPU2-PSH-01

THIS CONFORMED DOCUMENT IS RELEASED FOR THE CONVENIENCE OF THE CONTRACTOR UNDER THE AUTHORITY OF:

11-01-22

DANNY M HURTADO, P.E. DATE
TX LIC NO. 104266

SEE DISCLAIMER FOR LIMITATIONS OF USE.

CONTRACT DOCUMENTS DATED JUNE 10, 2022, AS PART OF THE BIDDING DOCUMENTS (DRAWINGS AND SPECIFICATIONS) AND SUBSEQUENTLY ISSUED ADDENDA HAVE BEEN MERGED INTO ONE CONFORMING SET OF DOCUMENTS FOR THE CONVENIENCE OF THE CONTRACTOR. IF INCONSISTENCIES OR AMBIGUITIES BETWEEN "CONFORMED" DOCUMENTS AND CONTRACT DOCUMENTS ARE FOUND, THE CONTRACT DOCUMENTS SHALL GOVERN.

REV	DATE	BY	DESCRIPTION
			CONFORMED DOCUMENTS

DESIGNED JPH
DRAWN LGD
CHECKED DMH
DATE NOVEMBER 2022

** ORIGINAL SEALED BY JONATHAN P HERRBOLDT 06-10-22 TX PE 135057 **

carollo® TBPELS No. F-882

CITY OF AUSTIN

CITY OF AUSTIN
WILD HORSE RANCH WWTP EXPANSION
MECHANICAL
SLUDGE HOLDING TANK NO. 1 PLAN

VERIFY SCALES
BAR IS ONE INCH ON ORIGINAL DRAWING
0 1"
IF NOT ONE INCH ON THIS SHEET, ADJUST SCALES ACCORDINGLY

JOB NO. 10976A.00
DRAWING NO. 70M01
SHEET NO. 432 OF 464

PROJECT NO. 10976A10 FILE NAME: 10976A1070M001.dgn

Plot Date: 11-OCT-2022 8:38:33 AM
User: LDietzel
PlotScale: 1:1
DesignScript: Carollo_Std_Pen_v0905.pen
ColorTable: gshade.ctb
Model: Layout1
LAST SAVED BY: ldietzel

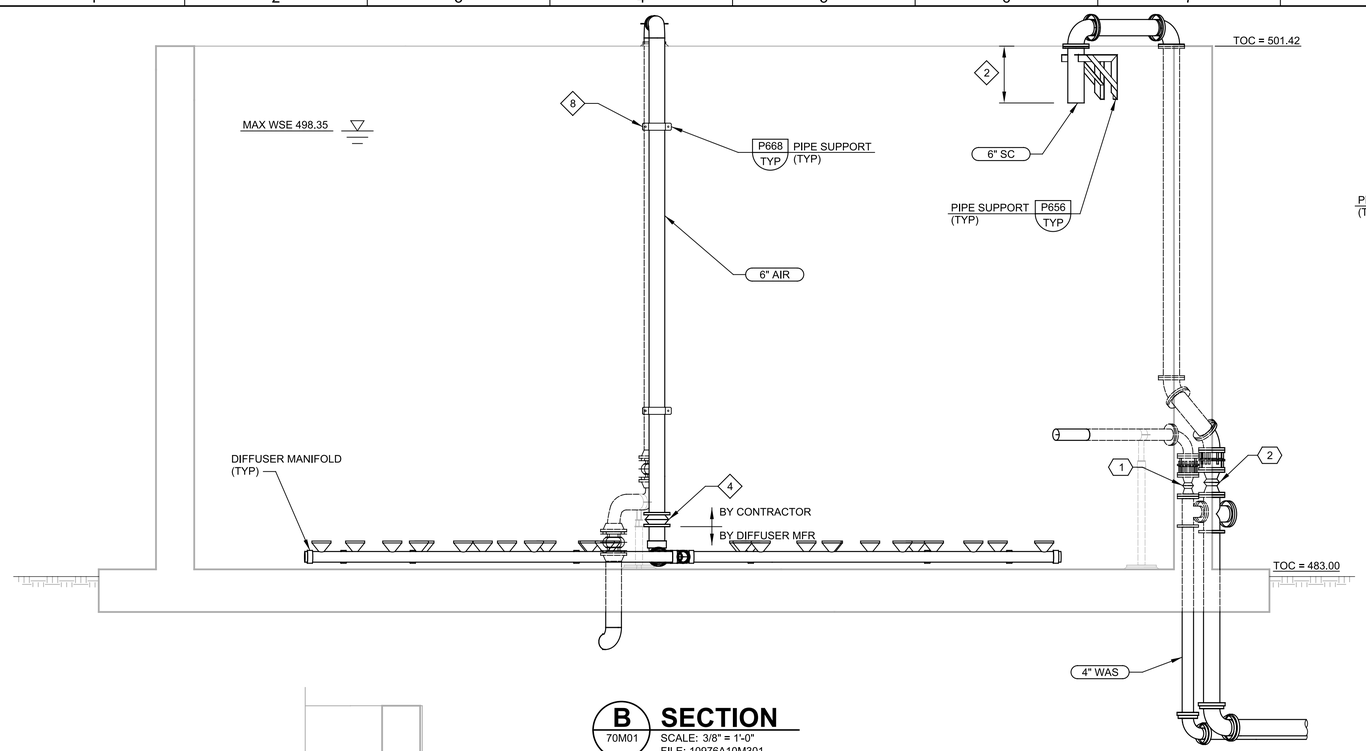

B SECTION
70M01
SCALE: 3/8" = 1'-0"
FILE: 10976A10M301

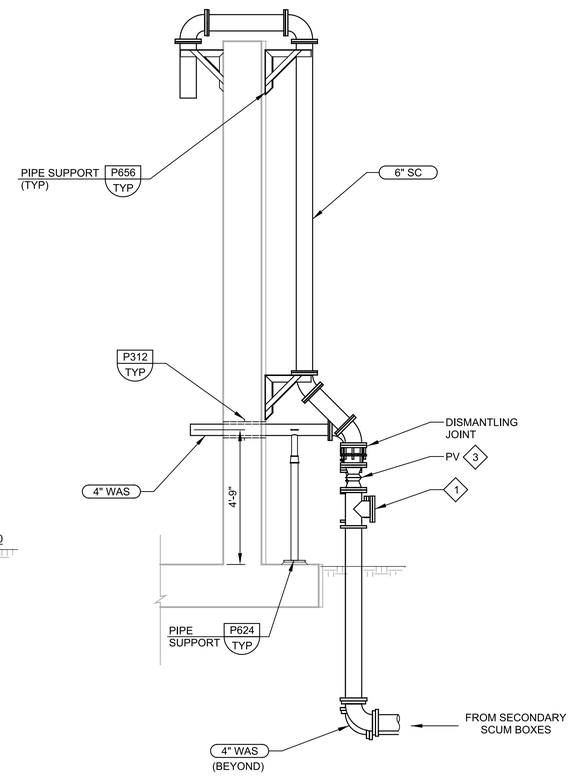

E SECTION
70M01
SCALE: 3/8" = 1'-0"
FILE: 10976A10M304

C SECTION
70M01
SCALE: 3/8" = 1'-0"
FILE: 10976A10M303

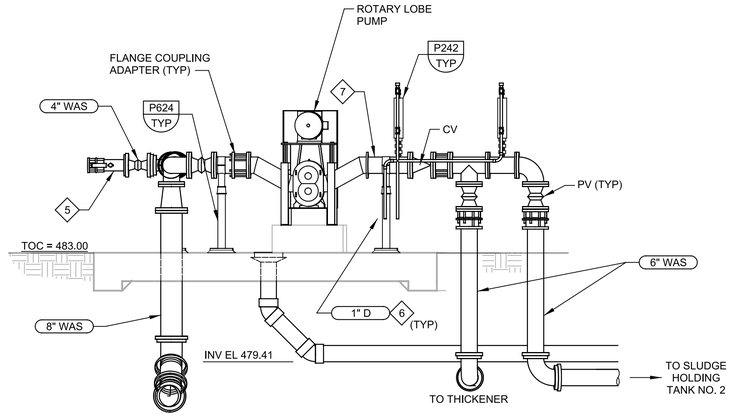

D SECTION
70M01
SCALE: 3/8" = 1'-0"
FILE: 10976A10M302

GENERAL NOTES:

1. REFER TO CIVIL SHEETS FOR PIPE CONTINUATION IN THE YARD.

KEY NOTES:

1 INSTALL BLIND FLANGE AND FLUSHING CONNECTION PER TYPICAL DETAIL P202. WAS PIPE SIMILAR.

2 EXTEND DISCHARGE PIPES 2 FEET BELOW TOP OF WALL.

3 PLUG VALVE ON 6" SC PIPING NORMALLY CLOSED.

4 INSTALL RUBBER EXPANSION JOINT PER SPECIFICATION 15121 - PIPE COUPLINGS.

5 INSTALL 1" THREADED BOSS AND SAMPLE VALVE AT SPRING LINE ON PIPE. REFER TO SPECIFICATION 15117 - SPECIALTY VALVES FOR SAMPLE VALVE REQUIREMENTS.

6 FIELD ROUTE 1" DRAIN PIPE TO FLOOR DRAIN.

7 INSTALL PRESSURE SWITCH WITH ANNULAR SEAL PER TYPICAL DETAIL M296. TYPICAL OF BOTH ROTARY LOBE PUMPS.

8 INSTALL PIPE SWAY BRACES PER TYPICAL DETAIL P668 ON AIR PIPING OUTSIDE OF TANK SIMILAR TO PIPE SUPPORTS ON INTERIOR OF TANK. SWAY BRACES ON ALL AIR PIPING ARE TO BE STAINLESS STEEL.

X EQUIPMENT TAGS:

1	SHT NO. 1 WAS ISOLATION PLUG VALVE	Y-WAPI1-PV-01
2	SHT NO. 1 SCUM ISOLATION PLUG VALVE	Y-SCPI1-PV-01

THIS CONFORMED DOCUMENT IS RELEASED FOR THE CONVENIENCE OF THE CONTRACTOR UNDER THE AUTHORITY OF:

DANNY M HURTADO, P.E.
TX LIC NO. 104266

11-01-22
DATE

SEE DISCLAIMER FOR LIMITATIONS OF USE.

CONTRACT DOCUMENTS DATED JUNE 10, 2022, AS PART OF THE BIDDING DOCUMENTS (DRAWINGS AND SPECIFICATIONS) AND SUBSEQUENTLY ISSUED ADDENDA HAVE BEEN MERGED INTO ONE CONFORMING SET OF DOCUMENTS FOR THE CONVENIENCE OF THE CONTRACTOR. IF INCONSISTENCIES OR AMBIGUITIES BETWEEN "CONFORMED" DOCUMENTS AND CONTRACT DOCUMENTS ARE FOUND, THE CONTRACT DOCUMENTS SHALL GOVERN.

REV	DATE	BY	DESCRIPTION
			CONFORMED DOCUMENTS

DESIGNED JPH
DRAWN LGD
CHECKED DMH
DATE NOVEMBER 2022

** ORIGINAL SEALED BY JONATHAN P HERRBOLDT 06-10-22 TX PE 135057 **

carollo®
TBPELS No. F-882

CITY OF AUSTIN
FOUNDED 1839

CITY OF AUSTIN

CITY OF AUSTIN
WILD HORSE RANCH WWTP EXPANSION
MECHANICAL
SLUDGE HOLDING TANK NO. 1
SECTIONS - 1

VERIFY SCALES
BAR IS ONE INCH ON ORIGINAL DRAWING
0 1"
IF NOT ONE INCH ON THIS SHEET, ADJUST SCALES ACCORDINGLY

JOB NO. 10976A.00
DRAWING NO. 70M02
SHEET NO. 433 OF 464

PROJECT NO. 10976A10 FILE NAME: 10976A1070M002.dgn

Plot Date: 11-OCT-2022 8:40:31 AM
User: LDietzel
PlotScale: 1:1
DesignScript: Carollo_Std_Pen_v0905.pen
ColorTable: gshade.ctb
Model: Layout1
LAST SAVED BY: ldietzel

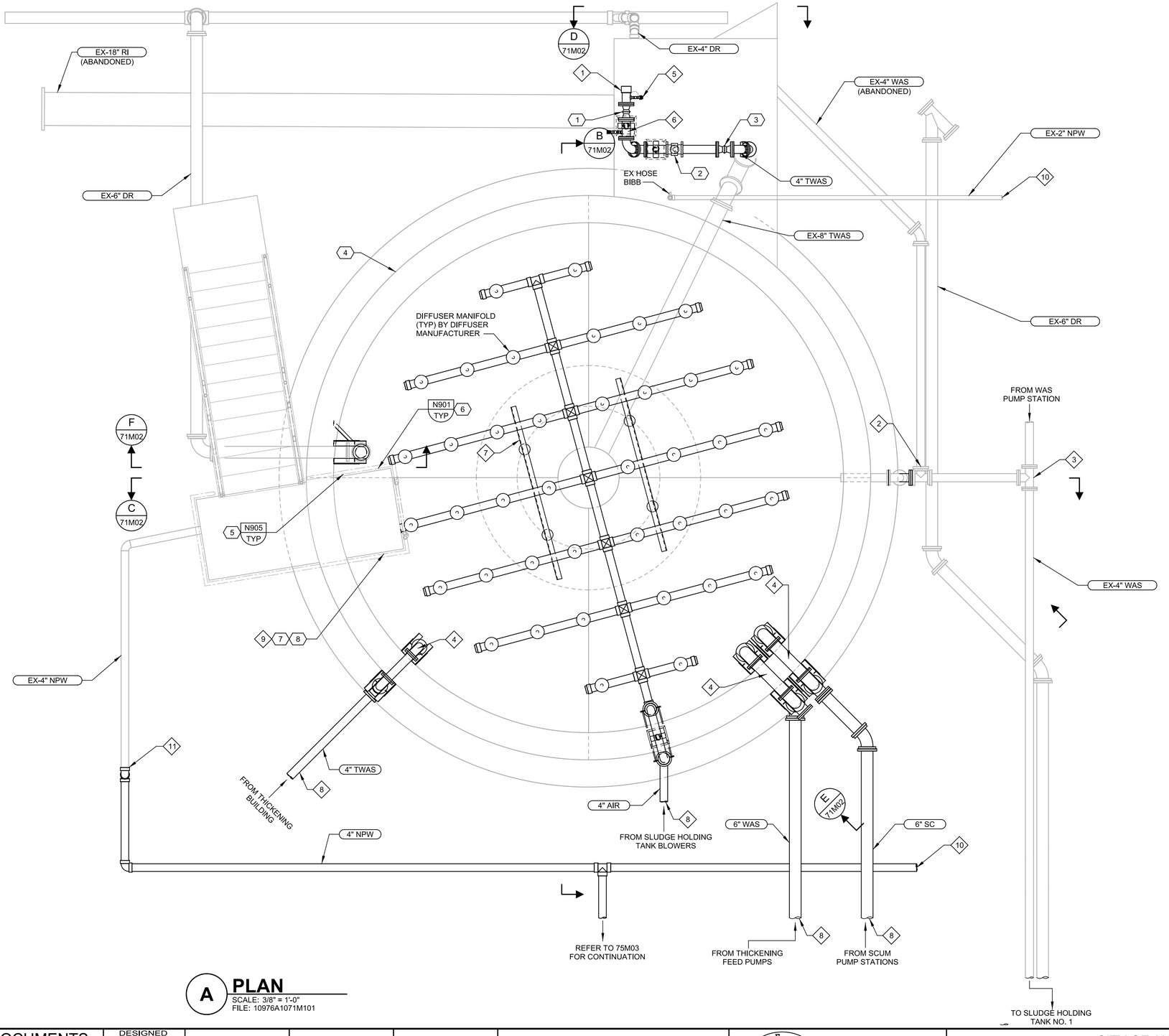

A **PLAN**
SCALE: 3/8" = 1'-0"
FILE: 10976A1071M101

GENERAL NOTES:

1. INFORMATION ON THIS SHEET IS BASED ON RECORD DRAWINGS. CONTRACTOR SHALL FIELD VERIFY CONDITIONS PRIOR TO COMMENCING WORK.
2. NOT ALL EXISTING PIPING SHOWN FOR CLARITY.
3. REFER TO CIVIL SHEETS FOR YARD PIPING CONTINUATION.

(#) KEY NOTES:

1 INSTALL TYPE 304 SST 4" FEMALE CAMLOCK FITTING FOR TRUCK DISPOSAL.

2 INSTALL BLIND FLANGE ON TEE AND PLUG ABANDONED 4" WAS PIPE FROM EXISTING OFFLOADING STATION.

3 REPLACE EXISTING ELBOW WITH TEE.

4 INSTALL 1/2" WELDOLET AND 1/2" GSP FOR AIR RELEASE. AIR RELEASE PIPE TO DISCHARGE INSIDE SLUGE HOLDING TANK WITH DISCHARGE AT LEAST 6" BELOW TOP OF WALL.

5 INSTALL 3/4" THREADED BOSS. CONNECT BALL VALVE AND 3/4" TWO LUG AIR HOSE CONNECTION.

6 INSTALL 1" THREADED BOSS AND SAMPLE VALVE AT SPRINGLINE OF PIPE. REFER TO SPECIFICATION 15117 - SPECIALTY VALVES FOR REQUIREMENTS.

7 DIFFUSER MANUFACTURER RESPONSIBLE FOR DIFFUSER PIPING SUPPORT DESIGN. SUPPORT DESIGN TO BE SUBMITTED TO ENGINEER FOR REVIEW AND APPROVAL.

8 REFER TO 75M03 FOR PIPING CONTINUATION.

9 INSTALL DO PROBE WITH HACH CHAIN MOUNT KIT, MODEL LZX914.99.11200 OR ENGINEER APPROVED EQUAL. INSTALL TSS PROBE WITH POLE MOUNT KIT WITH ALUMINUM POLE. MOUNT EQUIPMENT AND CABLE SO ALL EQUIPMENT IS ACCESSIBLE FROM PLATFORM. MOUNTING KIT SHALL BE SIZED SUCH THAT PROBE CAN REACH AT LEAST 10 FEET BELOW TOP OF WALL.

10 CONNECT TO NEW 6" NPW. REFER TO YARD PIPING SHEETS FOR CONTINUATION.

11 CONNECT TO EXISTING 4" NPW.

(X) EQUIPMENT TAGS:

1	SHT NO. 2 TRUCK OFFLOADING PLUG VALVE 2	DIG-THPI1-PV-02
2	SHT NO. 2 TRUCK OFFLOADING FLOW METER	DIG-THPI1-FIT-01
3	SHT NO. 2 TRUCK OFFLOADING PV 1	DIG-THPI1-PV-01
4	SLUDGE HOLDING TANK NO. 2	DIG-SLUDGEBASIN-01
5	SHT NO. 2 HIGH LEVEL SWITCH	DIG-SLB1-LSH-01
6	SHT NO. 2 LEVEL INDICATING TRANSMITTER	DIG-SLB1-LIT-01
7	SHT NO. 2 DO PROBE	DIG-SLB1-AIT-01
8	SHT NO. 2 TSS PROBE	DIG-SLB1-AIT-02

THIS CONFORMED DOCUMENT IS RELEASED FOR THE CONVENIENCE OF THE CONTRACTOR UNDER THE AUTHORITY OF:

DANNY M HURTADO, P.E.
TX LIC NO. 104266
11-01-22
DATE

SEE DISCLAIMER FOR LIMITATIONS OF USE.

CONTRACT DOCUMENTS DATED JUNE 10, 2022, AS PART OF THE BIDDING DOCUMENTS (DRAWINGS AND SPECIFICATIONS) AND SUBSEQUENTLY ISSUED ADDENDA HAVE BEEN MERGED INTO ONE CONFORMING SET OF DOCUMENTS FOR THE CONVENIENCE OF THE CONTRACTOR. IF INCONSISTENCIES OR AMBIGUITIES BETWEEN "CONFORMED" DOCUMENTS AND CONTRACT DOCUMENTS ARE FOUND, THE CONTRACT DOCUMENTS SHALL GOVERN.

REV	DATE	BY	DESCRIPTION
			CONFORMED DOCUMENTS

DESIGNED JPH
DRAWN LGD
CHECKED DMH
DATE NOVEMBER 2022

** ORIGINAL SEALED BY JONATHAN P HERRBOLDT 06-10-22 TX PE 135057 **

carollo
TBPELS No. F-882

CITY OF AUSTIN FOUNDED 1839
CITY OF AUSTIN

CITY OF AUSTIN
WILD HORSE RANCH WWTP EXPANSION
MECHANICAL
SLUDGE HOLDING TANK NO. 2
PLAN

VERIFY SCALES
BAR IS ONE INCH ON ORIGINAL DRAWING
0 1"
IF NOT ONE INCH ON THIS SHEET, ADJUST SCALES ACCORDINGLY

JOB NO. 10976A.00
DRAWING NO. 71M01
SHEET NO. 434 OF 464

PROJECT NO. 10976A10 FILE NAME: 10976A1071M001.dgn

Plot Date: 11-OCT-2022 8:42:06 AM
User: LDietzel
PlotScale: 1:1
DesignScript: Carollo_Std_Pen_v0905.pen
ColorTable: gshade.ctb
Model: Layout1
LAST SAVED BY: ldietzel

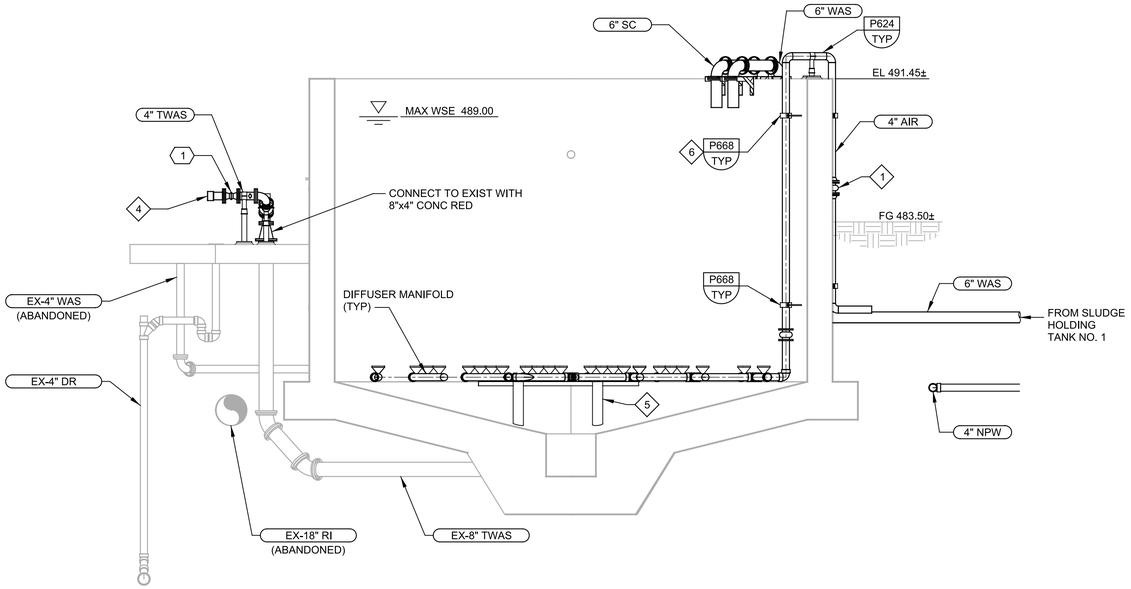

B SECTION
71M01
SCALE: 1/4" = 1'-0"
FILE: 10976A1071M301

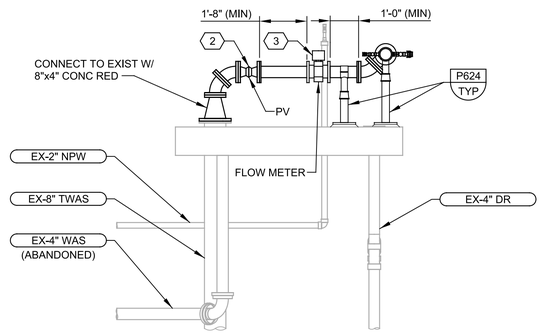

D SECTION
71M01
SCALE: 3/8" = 1'-0"
FILE: 10976A1071M303

GENERAL NOTES:

1. INFORMATION ON THIS SHEET IS BASED ON RECORD DRAWINGS. CONTRACTOR SHALL FIELD VERIFY CONDITIONS PRIOR TO COMMENCING WORK.
2. NOT ALL EXISTING PIPING SHOWN FOR CLARITY.

KEY NOTES:

1 INSTALL RUBBER EXPANSION JOINT PER SPECIFICATION 15121 - PIPE COUPLINGS.

2 INSTALL TEE WITH BLIND FLANGE. INSTALL FLUSHING CONNECTION PER TYPICAL DETAIL P202. INSTALL FCA BELOW TEE.

3 DISCHARGE PIPING TO EXTEND 2.5 FEET BELOW TOP OF WALL.

4 INSTALL TYPE 304 SST 4" FEMALE CAMLOCK FITTING FOR TRUCK DISPOSAL.

5 AERATION DIFFUSER SUPPORTS BY DIFFUSER MANUFACTURER. SUPPORT DESIGN TO BE SUBMITTED TO ENGINEER FOR REVIEW AND APPROVAL.

6 INSTALL PIPE SWAY BRACE PER TYPICAL DETAIL P668 ON ABOVE GROUND AIR PIPING EXTERIOR TO WALL IN SIMILAR LOCATION TO SWAY BRACE ON INTERIOR OF TANK, ALL SWAY BRACE HARDWARE ON AIR PIPING TO BE STAINLESS STEEL.

X EQUIPMENT TAGS:

1	SHT NO. 2 TRUCK OFFLOADING PLUG VALVE 2	DIG-THPI1-PV-02
2	SHT NO. 2 TRUCK OFFLOADING PLUG VALVE 1	DIG-THPI1-PV-01
3	SHT NO. 2 TRUCK OFFLOADING FLOW METER	DIG-THPI1-FIT-01
4	SHT NO. 2 WAS ISOLATION PLUG VALVE	Y-WAPI1-PV-02
5	SHT NO. 2 SCUM ISOLATION PLUG VALVE	Y-SCPI-PV-02

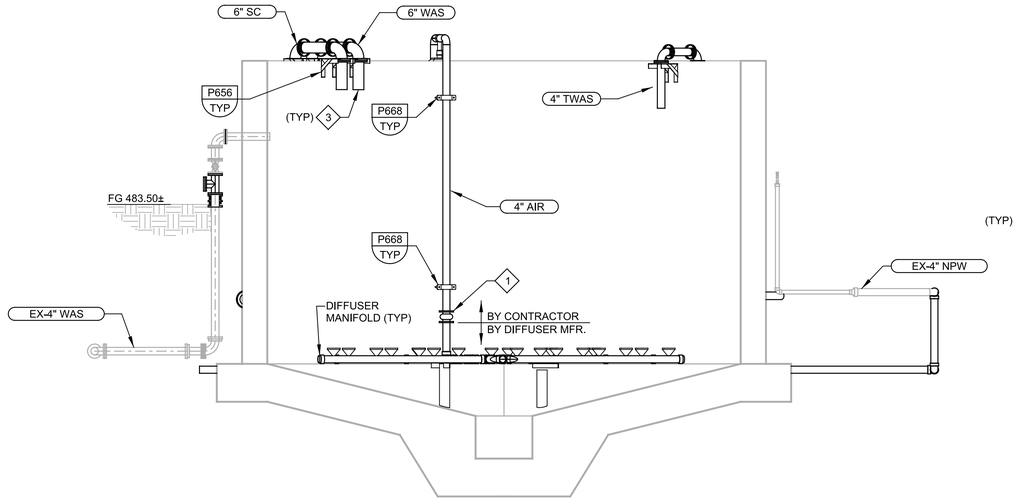

C SECTION
71M01
SCALE: 1/4" = 1'-0"
FILE: 10976A1071M302

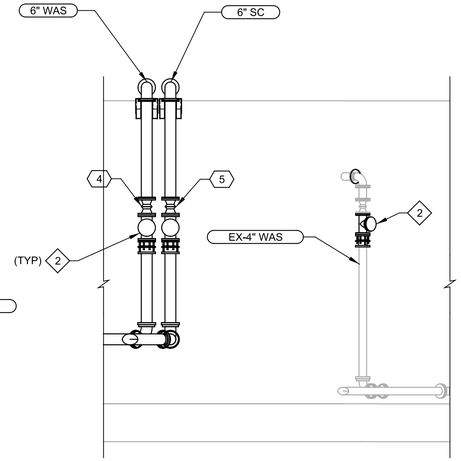

E SECTION
71M01
SCALE: 1/4" = 1'-0"
FILE: 10976A1071M304

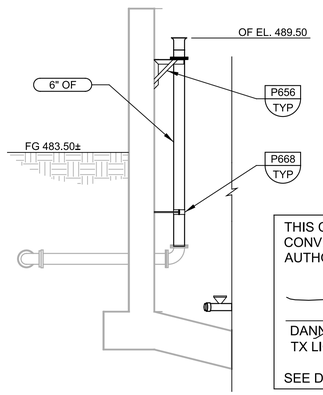

F SECTION
71M01
SCALE: 1/4" = 1'-0"
FILE: 10976A1071M305

THIS CONFORMED DOCUMENT IS RELEASED FOR THE CONVENIENCE OF THE CONTRACTOR UNDER THE AUTHORITY OF:

11-01-22

DANNY M HURTADO, P.E. DATE
TX LIC NO. 104266

SEE DISCLAIMER FOR LIMITATIONS OF USE.

CONTRACT DOCUMENTS DATED JUNE 10, 2022, AS PART OF THE BIDDING DOCUMENTS (DRAWINGS AND SPECIFICATIONS) AND SUBSEQUENTLY ISSUED ADDENDA HAVE BEEN MERGED INTO ONE CONFORMING SET OF DOCUMENTS FOR THE CONVENIENCE OF THE CONTRACTOR. IF INCONSISTENCIES OR AMBIGUITIES BETWEEN "CONFORMED" DOCUMENTS AND CONTRACT DOCUMENTS ARE FOUND, THE CONTRACT DOCUMENTS SHALL GOVERN.

REV	DATE	BY	DESCRIPTION
			CONFORMED DOCUMENTS

DESIGNED JPH
DRAWN LGD
CHECKED DMH
DATE NOVEMBER 2022

** ORIGINAL SEALED BY JONATHAN P HERRBOLDT 06-10-22 TX PE 135057 **

carollo® TBPELS No. F-882

CITY OF AUSTIN

CITY OF AUSTIN
WILD HORSE RANCH WWTP EXPANSION
MECHANICAL
SLUDGE HOLDING TANK NO. 2
SECTIONS - 1

VERIFY SCALES
BAR IS ONE INCH ON ORIGINAL DRAWING
0 1"
IF NOT ONE INCH ON THIS SHEET, ADJUST SCALES ACCORDINGLY

JOB NO. 10976A.00
DRAWING NO. 71M02
SHEET NO. 435 OF 464

PROJECT NO. 10976A10 FILE NAME: 10976A1071M002.dgn

Plot Date: 11-OCT-2022 8:43:59 AM
User: LDietzel
PlotScale: 1:1
DesignScript: Carollo_Std_Pen_v0905.pen
ColorTable: gshade.ctb
Model: Layout1
LAST SAVED BY: ldietzel

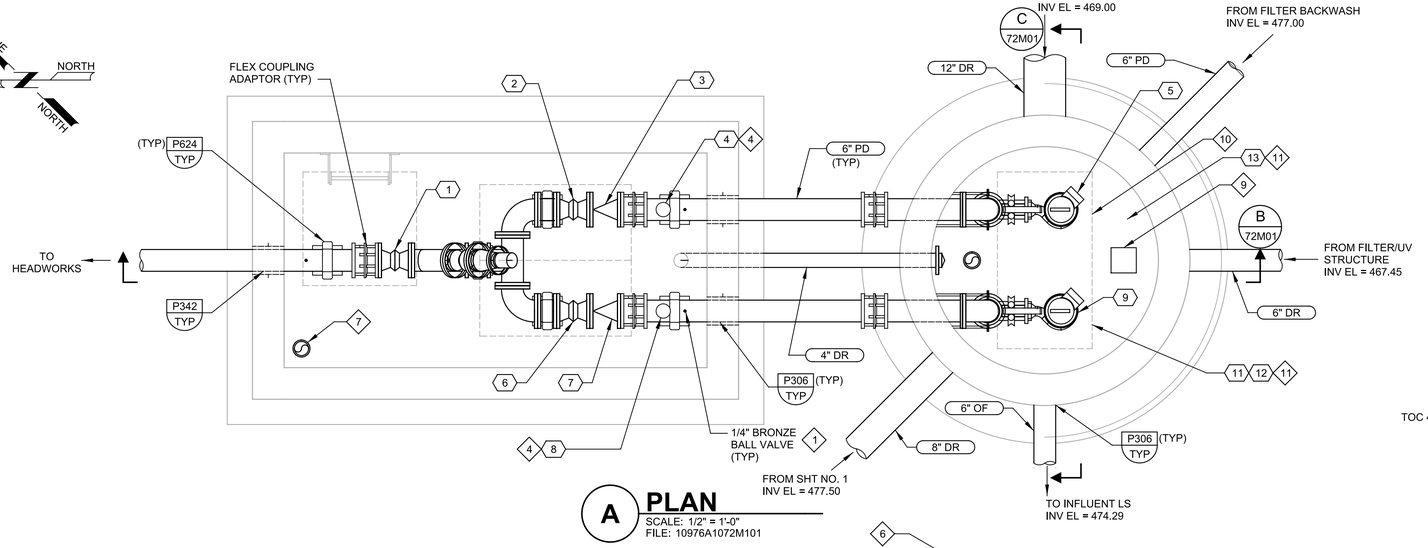

A PLAN
SCALE: 1/2" = 1'-0"
FILE: 10976A1072M101

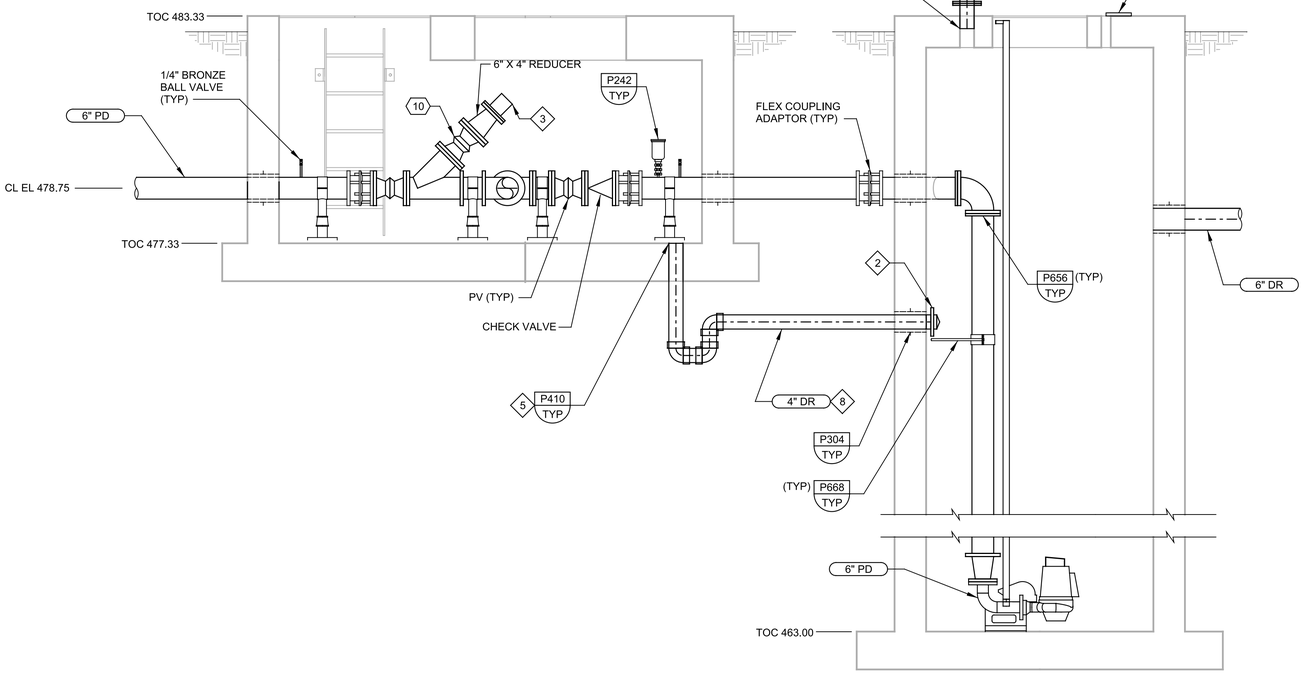

B SECTION
SCALE: 1/2" = 1'-0"
FILE: 10976A1072M301

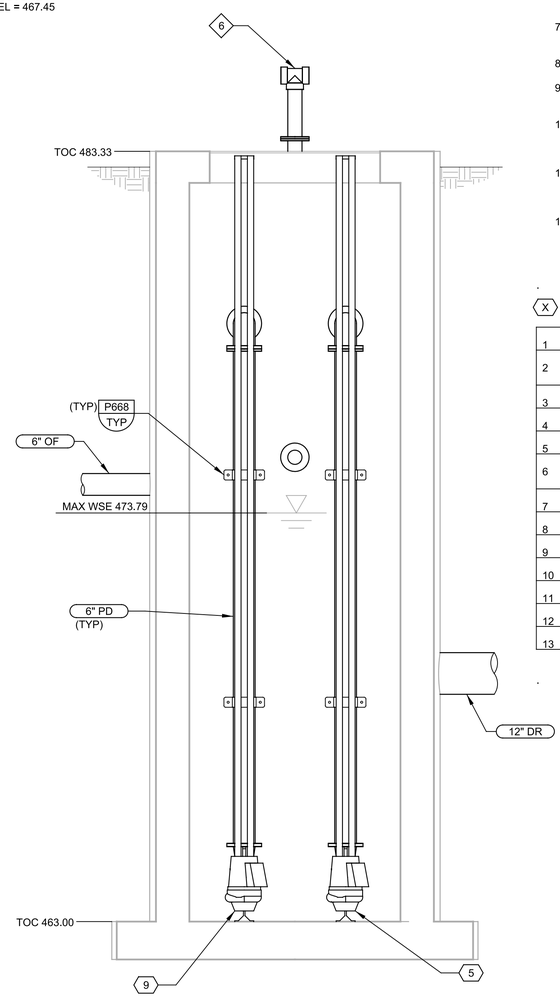

C SECTION
SCALE: 1/2" = 1'-0"
FILE: 10976A1072M302

GENERAL NOTES:

1. REFER TO CIVIL SHEETS FOR UNDERGROUND PIPING CONTINUATION.

KEY NOTES:

1 PROVIDE MINIMUM 6" CLEARANCE BETWEEN BALL VALVE AND WALL.

2 INSTALL SST FLAPPER VALVE ON DRAIN PIPE TERMINATION IN WET WELL. FLAPPER VALVE SHALL BE MUELLER MODEL 50C OR ENGINEER APPROVED EQUAL.

3 INSTALL TYPE 304 SST 4" FEMALE QUICK CONNECT FITTING.

4 PIPE AIR/VACUUM VALVE DRAIN TO VAULT DRAIN.

5 DRAIN COVER TO BE SST.

6 INSTALL 4" 316 SST VENT PIPE WITH SST BUG SCREEN AT OPENINGS. HEIGHT OF VENT TO BE MINIMUM 2 FEET.

7 4" 316 SST GOOSENECK VENT WITH SST BUG SCREEN. HEIGHT OF VENT SHALL BE MINIMUM 1 FEET.

8 SLOPE 4" DR A MINIMUM 1/4" PER FOOT.

9 SURFACE MOUNT DAVIT CRANE NOT SHOWN FOR CLARITY. REFER TO EQUIPMENT SPECIFICATIONS FOR REQUIREMENTS.

10 REFER TO STRUCTURAL SHEETS FOR ACCESS HATCH REQUIREMENTS. CONTRACTOR SHALL COORDINATE WITH PUMP MANUFACTURER FOR CLEARANCE REQUIREMENTS.

11 COORDINATE INSTRUMENTATION INSTALLATION WITH STRUCTURAL. OPENINGS THAT INTERRUPT REINFORCING BARS SHALL BE REINFORCED PER TYPICAL DETAIL S180.

12 INSTALL 4" DIP WALL PIPE WITH FLANGED END 4" ABOVE TOC FOR CONNECTION TO SST VENT PIPE. INSTALL DIELECTRIC HARDWARE FOR JOINING DISSIMILAR METALS. INSTALLATION FOR GOOSENECK VENT SIMILAR.

X EQUIPMENT TAGS:

1	PDPS ISOLATION PLUG VALVE	SHF-YAPI1-PV-02
2	PLANT DRAIN PUMP NO. 1 ISOLATION PLUG VALVE	SHF-LSPU1-PV-01
3	PLANT DRAIN PUMP NO. 1 CHECK VALVE	SHF-LSPU1-CV-01
4	PLANT DRAIN PUMP NO. 1 AVV	SHF-LSPU1-ARV-01
5	PLANT DRAIN PUMP NO. 1	SHF-LSPUMP-01
6	PLANT DRAIN PUMP NO. 2 ISOLATION PLUG VALVE	SHF-LSPU2-PV-01
7	PLANT DRAIN PUMP NO. 2 CHECK VALVE	SHF-LSPU2-CV-01
8	PLANT DRAIN PUMP NO. 2 AVV	SHF-LSPU2-ARV-01
9	PLANT DRAIN PUMP NO. 2	SHF-LSPUMP-02
10	PDPS FLUSHING PLUG VALVE	SHF-YAPI1-PV-01
11	PDPS LOW LEVEL SWITCH	SHF-WW-LSL-01
12	PDPS HIGH LEVEL SWITCH	SHS-WW-LSL-02
13	PDPS LEVEL INDICATING TRANSMITTER	SHS-WW-LIT-01

THIS CONFORMED DOCUMENT IS RELEASED FOR THE CONVENIENCE OF THE CONTRACTOR UNDER THE AUTHORITY OF:

DANNY M HURTADO, P.E.
TX LIC NO. 104266

11-01-22
DATE

SEE DISCLAIMER FOR LIMITATIONS OF USE.

CONTRACT DOCUMENTS DATED JUNE 10, 2022, AS PART OF THE BIDDING DOCUMENTS (DRAWINGS AND SPECIFICATIONS) AND SUBSEQUENTLY ISSUED ADDENDA HAVE BEEN MERGED INTO ONE CONFORMING SET OF DOCUMENTS FOR THE CONVENIENCE OF THE CONTRACTOR. IF INCONSISTENCIES OR AMBIGUITIES BETWEEN "CONFORMED" DOCUMENTS AND CONTRACT DOCUMENTS ARE FOUND, THE CONTRACT DOCUMENTS SHALL GOVERN.

REV	DATE	BY	DESCRIPTION
			CONFORMED DOCUMENTS

DESIGNED JPH
DRAWN LGD
CHECKED DMH
DATE NOVEMBER 2022

** ORIGINAL SEALED BY JONATHAN P HERRBOLDT 06-10-22 TX PE 135057 **

carollo®
TBPELS No. F-882

CITY OF AUSTIN
FOUNDED 1839

CITY OF AUSTIN

CITY OF AUSTIN
WILD HORSE RANCH WWTP EXPANSION
MECHANICAL
PLANT DRAIN PUMP STATION PLAN AND SECTIONS

VERIFY SCALES
BAR IS ONE INCH ON ORIGINAL DRAWING
0 1"
IF NOT ONE INCH ON THIS SHEET, ADJUST SCALES ACCORDINGLY

JOB NO. 10976A.00
DRAWING NO. 72M01
SHEET NO. 436 OF 464

PROJECT NO. 10976A10 FILE NAME: 10976A1072M001.dgn

Plot Date: 11-OCT-2022 8:45:37 AM
User: LDietzel
PlotScale: 1:1
DesignScript: Carollo_Std_Pen_v0905.pen
ColorTable: gshade.ctb
Model: Layout1
LAST SAVED BY: ldietzel

THIS CONFORMED DOCUMENT IS RELEASED FOR THE CONVENIENCE OF THE CONTRACTOR UNDER THE AUTHORITY OF:

DANNY M HURTADO, P.E.
TX LIC NO. 104266

11-01-22
DATE

SEE DISCLAIMER FOR LIMITATIONS OF USE.

CONTRACT DOCUMENTS DATED JUNE 10, 2022, AS PART OF THE BIDDING DOCUMENTS (DRAWINGS AND SPECIFICATIONS) AND SUBSEQUENTLY ISSUED ADDENDA HAVE BEEN MERGED INTO ONE CONFORMING SET OF DOCUMENTS FOR THE CONVENIENCE OF THE CONTRACTOR. IF INCONSISTENCIES OR AMBIGUITIES BETWEEN "CONFORMED" DOCUMENTS AND CONTRACT DOCUMENTS ARE FOUND, THE CONTRACT DOCUMENTS SHALL GOVERN.

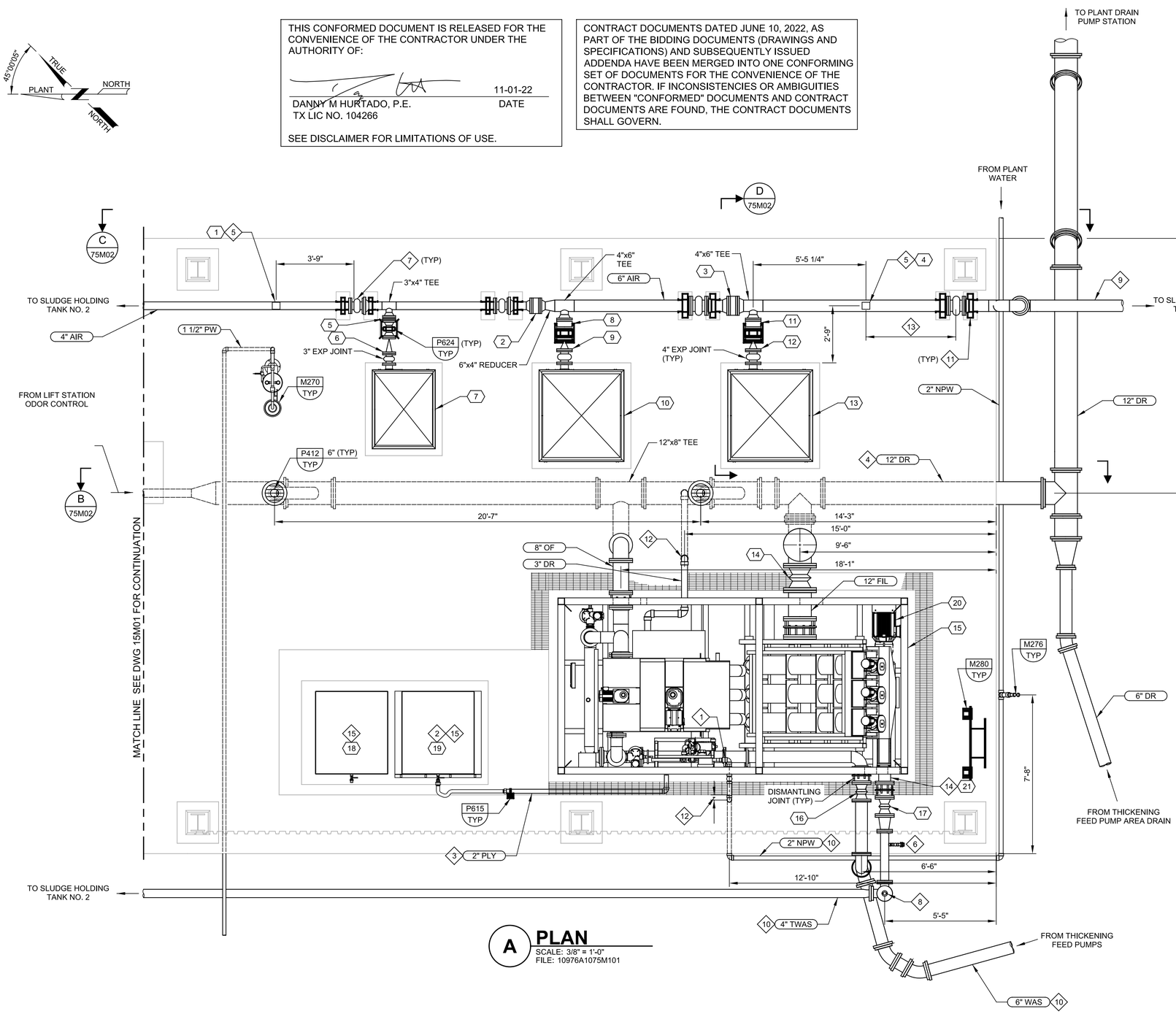

A PLAN

SCALE: 3/8" = 1'-0"
FILE: 10976A1075M101

GENERAL NOTES:

1. REFER TO CIVIL SHEETS FOR PIPING CONTINUATION IN THE YARD.
2. THICKENER SKID SUPPLIED BY OWNER FOR INSTALLATION BY CONTRACTOR. CONTRACTOR TO CONFIRM DIMENSIONS OF EQUIPMENT AND LOCATIONS OF PIPE CONNECTIONS AND INFORM ENGINEER OF DEVIATIONS FROM DRAWINGS PRIOR TO CONSTRUCTION. REFER TO SPECIFICATIONS FOR REQUIREMENTS.
3. PER SECTION 15082, ALL ABOVE GROUND NPW, PW, AND CHEMICAL PIPING SHALL BE INSULATED. THIS INCLUDES NPW AND CHEMICAL PIPING ON THE THICKENER SKID.

(#) KEY NOTES:

1 CONNECT 2" NPW TO THICKENER SPRAY SYSTEM AND POLYMER BLENDER. NOT ALL FITTINGS SHOWN. CONTRACTOR SHALL CONFIRM REQUIREMENTS AND FIELD ROUTE NPW AS REQUIRED.

2 CHEMICAL TOTE SCALE. REFER TO SPECIFICATIONS FOR REQUIREMENTS.

3 POLYMER PIPING TO RUN ABOVE GRATING AND TO BE SUPPORTED BY PIPE SUPPORT STYLE P615. CONTRACTOR TO MODIFY GRATING AS NEEDED TO INSTALL PIPE SUPPORTS.

4 PIPING UNDERNEATH THICKENER FLOOR SHALL BE CONCRETE ENCASED PER MP142. ENCASEMENT SHALL EXTEND A MINIMUM 3 FEET FROM EXTENT OF PAVEMENT.

5 INSERTION STYLE THERMAL DISPERSION FLOW METER.

6 INSTALL 1" NPT THREADED BOSS AND SAMPLE VALVE AT SPRING LINE ON PIPE. REFER TO SPECIFICATION 15117 - SPECIALTY VALVES FOR REQUIREMENTS.

7 INSTALL RUBBER EXPANSION JOINT PER SPECIFICATION 15121 - PIPE COUPLINGS.

8 INSTALL TEE WITH BLIND FLANGE AND FLUSHING CONNECTION PER TYPICAL DETAIL P202.

9 MINIMUM DEPTH OF AIR PIPING IS 3' BELOW FINISHED GRADE. SLOPE PIPE TOWARD SLUDGE HOLDING TANK.

10 PIPING UNDERNEATH PAVEMENT SHALL BE CONCRETE ENCASED PER TYPICAL DETAIL C936. ENCASEMENT SHALL EXTEND A MINIMUM 3 FEET FROM EXTENT OF PAVEMENT.

11 REFER TO 75M03 FOR AIR PIPING SUPPORT CONFIGURATION.

12 PROVIDE MINIMUM 6" CLEAR SPACE BETWEEN TRENCH AND PIPE PENETRATION THROUGH SLAB.

13 MINIMUM DISTANCE BETWEEN FLOW METER AND DOWNSTREAM FITTINGS IS 31.5".

14 UPSTREAM OF PLUG VALVE, INSTALL PRESSURE SWITCH WITH ANNULAR SEAL PER TYPICAL DETAIL M296.

15 PROVIDE BLANKET STYLE 120V TOTE WARMER SIZED FOR 275 GALLONS. TOTE WARMER TO BE BY POWERBLANKET OR ENGINEER APPROVED EQUAL.

(X) EQUIPMENT TAGS:

1	SHT NO. 2 AIR FLOW METER	Y-AIPI1-FIT-02
2	SHT AIR HEADER ISOLATION BFV NO. 2	Y-AIPI1-BFV-02
3	SHT AIR HEADER ISOLATION BFV NO. 1	Y-AIPI1-BFV-01
4	SHT NO. 1 AIR FLOW METER	Y-AIPI1-FIT-01
5	SHF BLOWER NO. 3 ISOLATION BFV	SHF-BLWR3-BFV-01
6	SHF BLOWER NO. 3 FLAPPER CHECK VALVE	SHF-BLWR3-CV-01
7	SHF BLOWER NO. 3	SHF-BLOWER-03
8	SHF BLOWER NO. 2 ISOLATION BFV	SHF-BLWR2-BFV-01
9	SHF BLOWER NO. 2 FLAPPER CHECK VALVE	SHF-BLWR2-CV-01
10	SHF BLOWER NO. 2	SHF-BLOWER-02
11	SHF BLOWER NO. 1 ISOLATION BFV	SHF-BLWR1-BFV-01
12	SHF BLOWER NO. 1 FLAPPER CHECK VALVE	SHF-BLWR1-CV-01
13	SHF BLOWER NO. 1	SHF-BLOWER-01
14	THICKENER CENTRATE DISCHARGE ISOLATION PLUG VALVE	SHF-YAPI2-PV-01
15	SLUDGE THICKENER	SHF-THICKENER-01
16	THICKENER FEED ISOLATION PLUG VALVE	SHF-WAPI2-PV-01
17	TWAS DISCHARGE ISOLATION PLUG VALVE	Y-THPI1-PV-01
18	POLYMER TANK NO. 2	SHF-POLYMERTANK-02
19	POLYMER TANK NO. 1	SHF-POLYMERTANK-02
20	TWAS PUMP	SHF-SLUDGEPUMP-03
21	TWAS PUMP HIGH DISCHARGE PRESSURE SWITCH	SHF-SLPU3-PSH-01

REV	DATE	BY	DESCRIPTION

CONFORMED DOCUMENTS

DESIGNED JPH
DRAWN LGD
CHECKED DMH
DATE NOVEMBER 2022

** ORIGINAL SEALED BY JONATHAN P HERRBOLDT 06-10-22 TX PE 135057 **

carollo®
TBPELS No. F-882

CITY OF AUSTIN
FOUNDED 1839

CITY OF AUSTIN

CITY OF AUSTIN
WILD HORSE RANCH WWTP EXPANSION
MECHANICAL
THICKENING BUILDING PLAN

VERIFY SCALES
BAR IS ONE INCH ON ORIGINAL DRAWING
0 1"
IF NOT ONE INCH ON THIS SHEET, ADJUST SCALES ACCORDINGLY

JOB NO. 10976A.00
DRAWING NO. 75M01
SHEET NO. 436 OF 464

PROJECT NO. 10976A10 FILE NAME: 10976A1075M001.dgn

Plot Date: 11-OCT-2022 8:47:26 AM
User: LDietzel
DesignScript: Carollo_Std_Pen_v0905.pen
ColorTable: gshade.ctb
Model: Layout1
PlotScale: 1:1
LAST SAVED BY: ldietzel

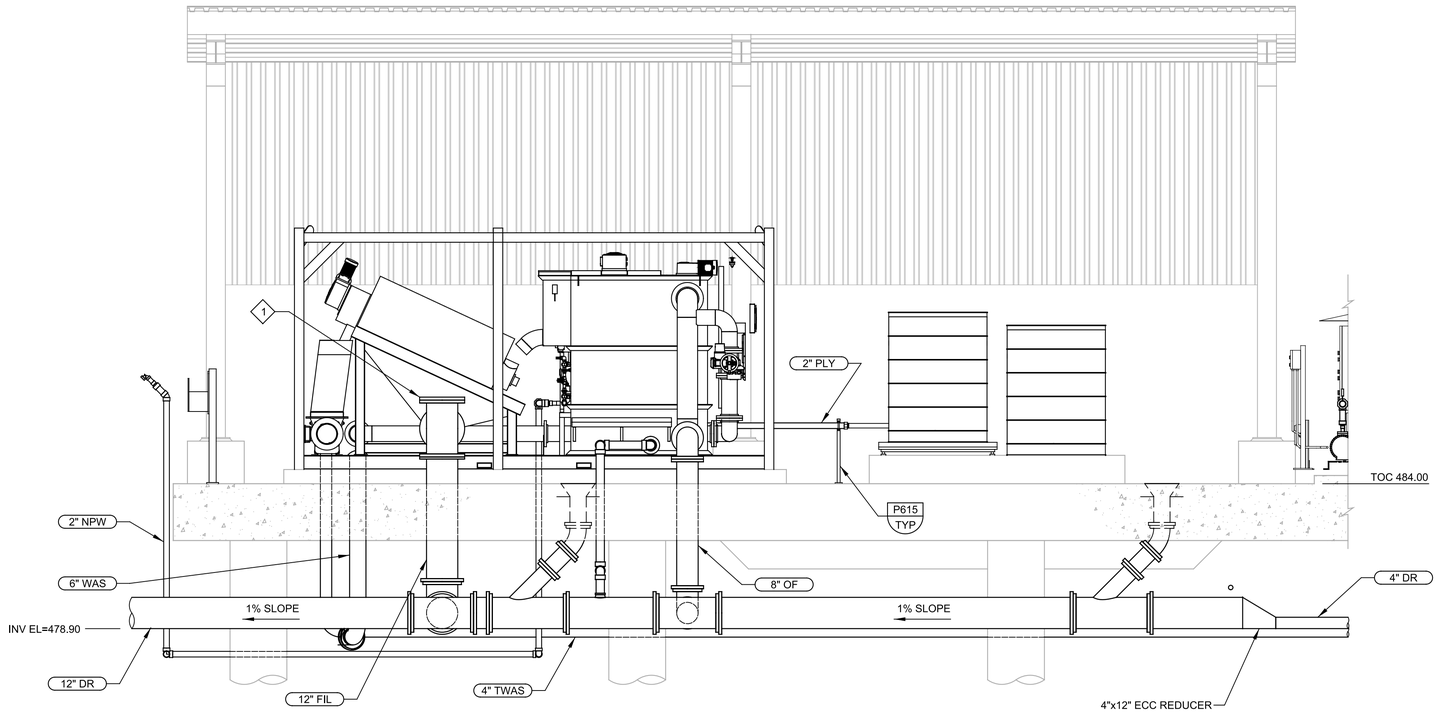

B SECTION
75M01 SCALE: 3/8" = 1'-0"
FILE: 10976A1075M301

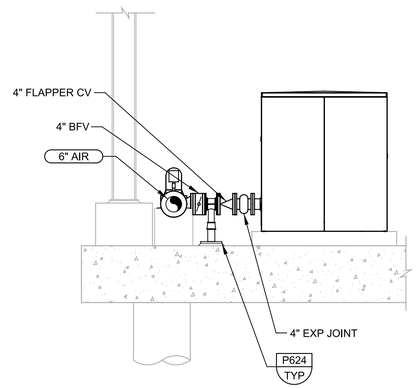

D SECTION
75M01 SCALE: 3/8" = 1'-0"
FILE: 10976A1075M303

GENERAL NOTES:

1. THICKENER SKID SUPPLIED BY OWNER FOR INSTALLATION BY CONTRACTOR. CONTRACTOR TO CONFIRM DIMENSIONS OF EQUIPMENT AND LOCATIONS OF PIPE CONNECTIONS AND INFORM ENGINEER OF DEVIATIONS FROM DRAWINGS PRIOR TO CONSTRUCTION. REFER TO SPECIFICATIONS FOR REQUIREMENTS.
2. PER SECTION 15082, ALL ABOVE GROUND NPW, PW, AND CHEMICAL PIPING SHALL BE INSULATED. THIS INCLUDES NPW AND CHEMICAL PIPING ON THE THICKENER SKID.

KEY NOTES:

1 INSTALL TEE WITH 304 SST BLIND FLANGE. BLIND FLANGE SHALL BE CONSTRUCTED WITH SAMPLE HATCH CONSISTING OF QUICK RELEASE HINGE AND GASKET SEALING DRAW LATCH.

2 INSTALL RUBBER EXPANSION JOINT PER SPECIFICATION 15121 - PIPE COUPLINGS.

3 INSTALL 1" THREADED BOSS AND BALL VALVE FOR MOISTURE BLOWOFF.

4 REFER TO 75M03 FOR AIR PIPING SUPPORT CONFIGURATION.

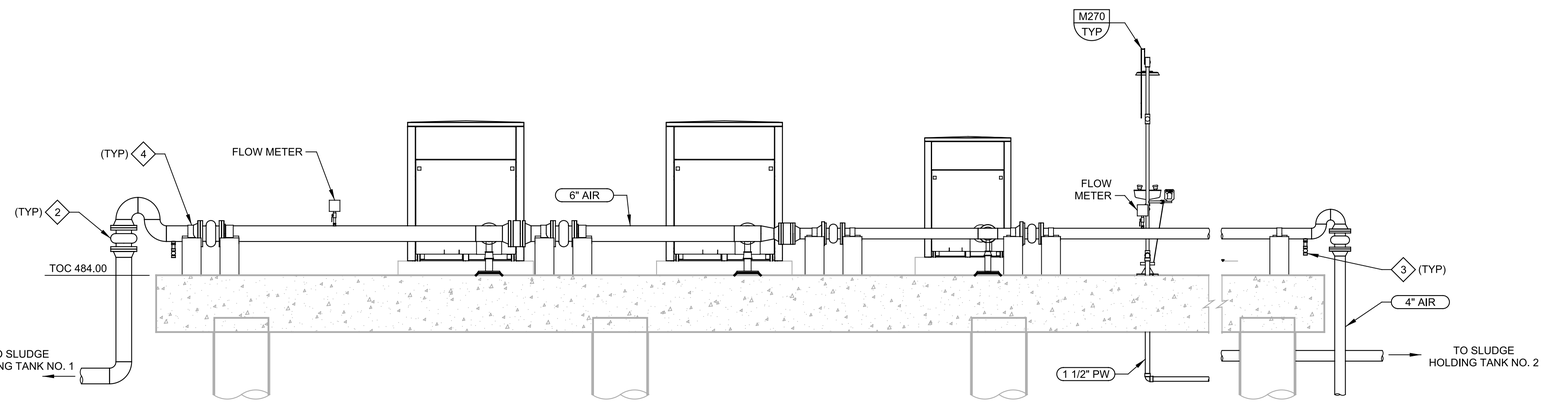

C SECTION
75M01 SCALE: 3/8" = 1'-0"
FILE: 10976A1075M302

THIS CONFORMED DOCUMENT IS RELEASED FOR THE CONVENIENCE OF THE CONTRACTOR UNDER THE AUTHORITY OF:

11-01-22
DANNY M HURTADO, P.E. DATE
TX LIC NO. 104266

SEE DISCLAIMER FOR LIMITATIONS OF USE.

CONTRACT DOCUMENTS DATED JUNE 10, 2022, AS PART OF THE BIDDING DOCUMENTS (DRAWINGS AND SPECIFICATIONS) AND SUBSEQUENTLY ISSUED ADDENDA HAVE BEEN MERGED INTO ONE CONFORMING SET OF DOCUMENTS FOR THE CONVENIENCE OF THE CONTRACTOR. IF INCONSISTENCIES OR AMBIGUITIES BETWEEN "CONFORMED" DOCUMENTS AND CONTRACT DOCUMENTS ARE FOUND, THE CONTRACT DOCUMENTS SHALL GOVERN.

REV	DATE	BY	DESCRIPTION
			CONFORMED DOCUMENTS

DESIGNED JPH
DRAWN LGD
CHECKED DMH
DATE NOVEMBER 2022

** ORIGINAL SEALED BY JONATHAN P HERRBOLDT 06-10-22 TX PE 135057 **

carollo® TBPELS No. F-882

CITY OF AUSTIN

CITY OF AUSTIN
WILD HORSE RANCH WWTP EXPANSION
MECHANICAL
THICKENING BUILDING SECTIONS - 1

VERIFY SCALES
BAR IS ONE INCH ON ORIGINAL DRAWING
0 1"
IF NOT ONE INCH ON THIS SHEET, ADJUST SCALES ACCORDINGLY

JOB NO. 10976A.00
DRAWING NO. 75M02
SHEET NO. 438 OF 464

PROJECT NO. 10976A10 FILE NAME: 10976A1075M002.dgn

Plot Date: 11-OCT-2022 8:49:05 AM
User: LDietzel
PlotScale: 1:1
DesignScript: Carollo_Std_Pen_v0905.pen
ColorTable: gshade.ctb
Model: Layout1
LAST SAVED BY: ldietzel

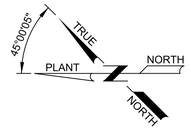

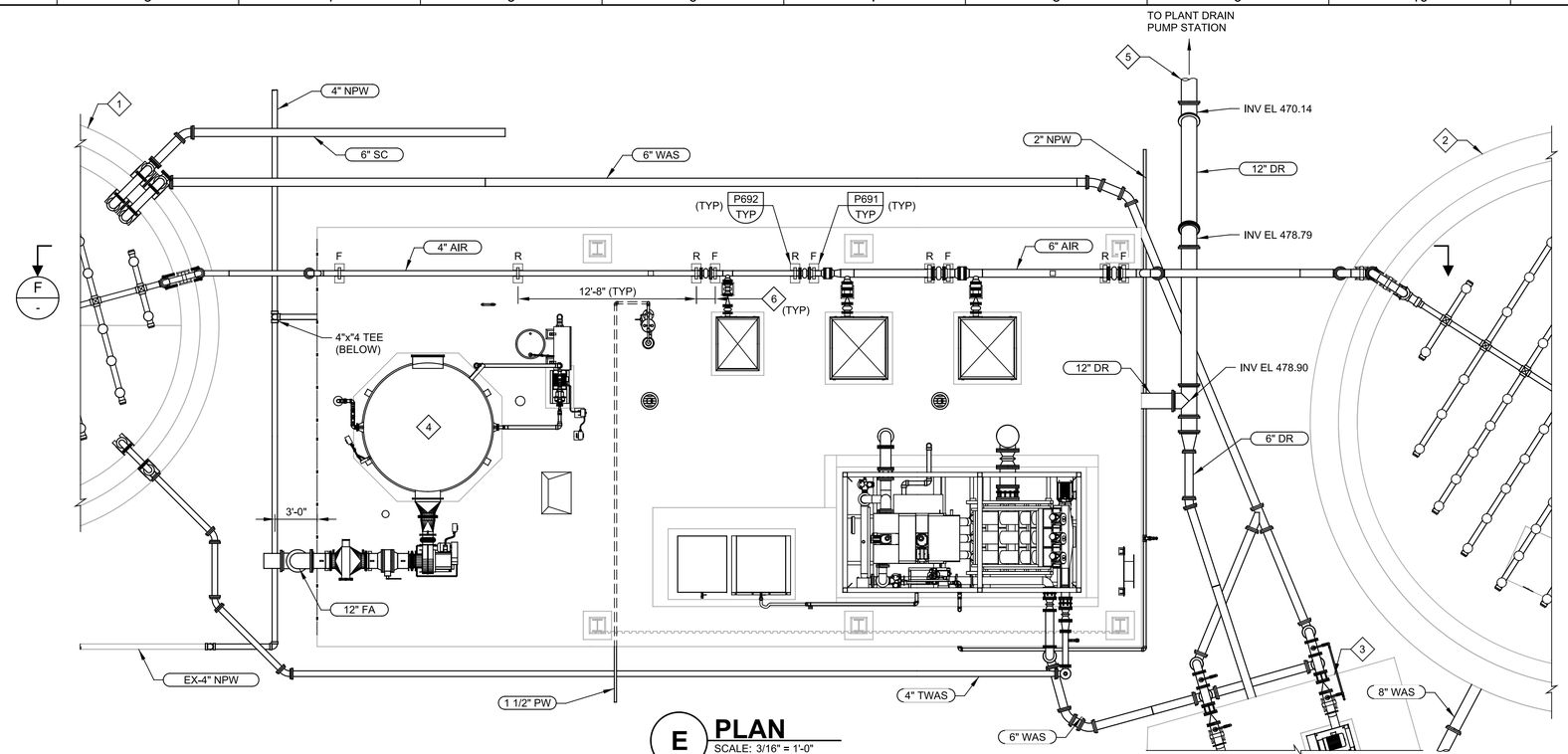

E PLAN
SCALE: 3/16" = 1'-0"
FILE: 10976A1075M0201

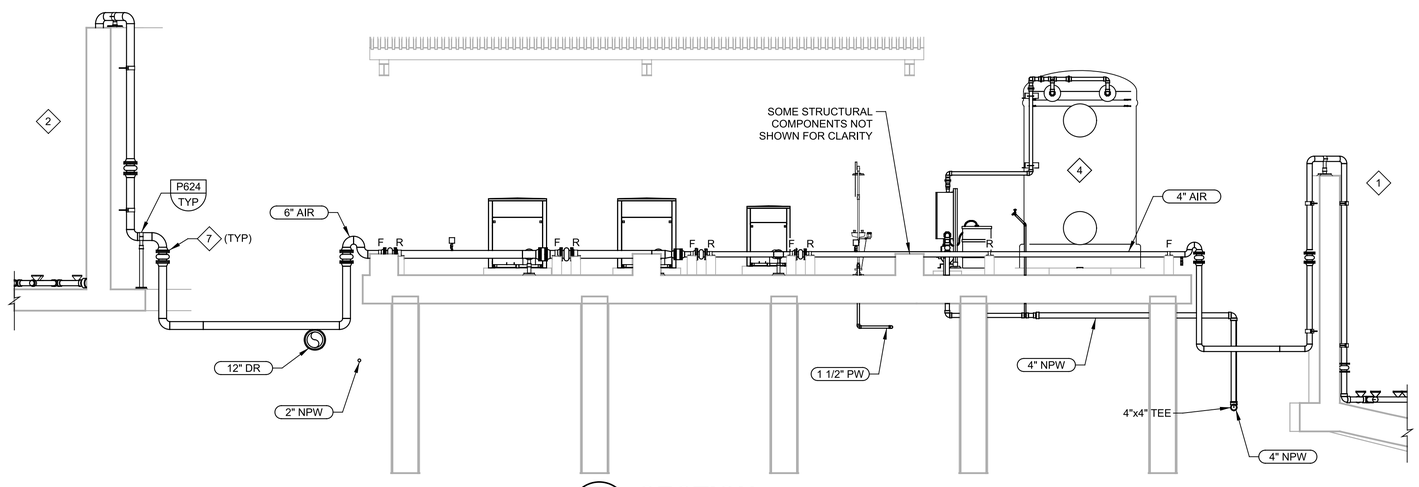

F - SECTION
SCALE: 3/16" = 1'-0"
FILE: 10976A1075M0305

GENERAL NOTES:

1. THICKENER SKID SUPPLIED BY OWNER FOR INSTALLATION BY CONTRACTOR. CONTRACTOR TO CONFIRM DIMENSIONS OF EQUIPMENT AND LOCATIONS OF PIPE CONNECTIONS AND INFORM ENGINEER OF DEVIATIONS FROM DRAWINGS PRIOR TO CONSTRUCTION. REFER TO SPECIFICATIONS FOR REQUIREMENTS.
2. PER SECTION 15082, ALL ABOVE GROUND NPW, PW, AND CHEMICAL PIPING SHALL BE INSULATED. THIS INCLUDES NPW AND CHEMICAL PIPING ON THE THICKENER SKID.
3. REFER TO CIVIL SHEETS FOR PIPING CONTINUATION IN THE YARD.

KEY NOTES:

1 REFER TO 71M01 FOR SLUDGE HOLDING TANK NO. 2.

2 REFER TO 70M01 FOR SLUDGE HOLDING TANK NO. 1.

3 REFER TO 70M01 FOR THICKENER FEED PUMP AREA.

4 REFER TO 15M01 FOR LIFT STATION ODOR CONTROL.

5 APPROXIMATE LOCATION OF CONNECTION WITH 45 DEGREE ELBOW IN YARD. REFER TO 02C12 FOR CONTINUATION.

6 SPACING BETWEEN PIPE SUPPORTS AT EXPANSION JOINTS SHALL BE COORDINATED SUCH THAT THE SUPPORT DOES NOT INTERFERE WITH EXPANSION JOINT FLANGES.

7 INSTALL RUBBER EXPANSION JOINT PER SPECIFICATION 15121 - PIPE COUPLINGS.

THIS CONFORMED DOCUMENT IS RELEASED FOR THE CONVENIENCE OF THE CONTRACTOR UNDER THE AUTHORITY OF:

DANNY M HURTADO, P.E.
TX LIC NO. 104266

11-01-22
DATE

SEE DISCLAIMER FOR LIMITATIONS OF USE.

CONTRACT DOCUMENTS DATED JUNE 10, 2022, AS PART OF THE BIDDING DOCUMENTS (DRAWINGS AND SPECIFICATIONS) AND SUBSEQUENTLY ISSUED ADDENDA HAVE BEEN MERGED INTO ONE CONFORMING SET OF DOCUMENTS FOR THE CONVENIENCE OF THE CONTRACTOR. IF INCONSISTENCIES OR AMBIGUITIES BETWEEN "CONFORMED" DOCUMENTS AND CONTRACT DOCUMENTS ARE FOUND, THE CONTRACT DOCUMENTS SHALL GOVERN.

REV	DATE	BY	DESCRIPTION
			CONFORMED DOCUMENTS

DESIGNED JPH
DRAWN JPC
CHECKED DMH
DATE NOVEMBER 2022

** ORIGINAL SEALED BY JONATHAN P HERRBOLDT 06-10-22 TX PE 135057 **

carollo®
TBPELS No. F-882

CITY OF AUSTIN
FOUNDED 1839
CITY OF AUSTIN

CITY OF AUSTIN
WILD HORSE RANCH WWTP EXPANSION
MECHANICAL
THICKENING SYSTEM
PIPING PLAN AND SECTION

VERIFY SCALES
BAR IS ONE INCH ON ORIGINAL DRAWING
0 1"
IF NOT ONE INCH ON THIS SHEET, ADJUST SCALES ACCORDINGLY

JOB NO. 10976A.00
DRAWING NO. 75M03
SHEET NO. 439 OF 466

PROJECT NO. 10976A10 FILE NAME: 10976A1075M003.dgn

Plot Date: 11-OCT-2022 8:50:53 AM
User: LDietzel
PlotScale: 1:1
DesignScript: Carollo_Std_Pen_v0905.pen
ColorTable: gshade.ctb
Model: Layout1
LAST SAVED BY: ldietzel

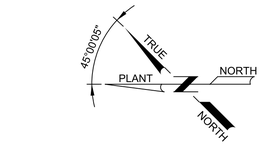

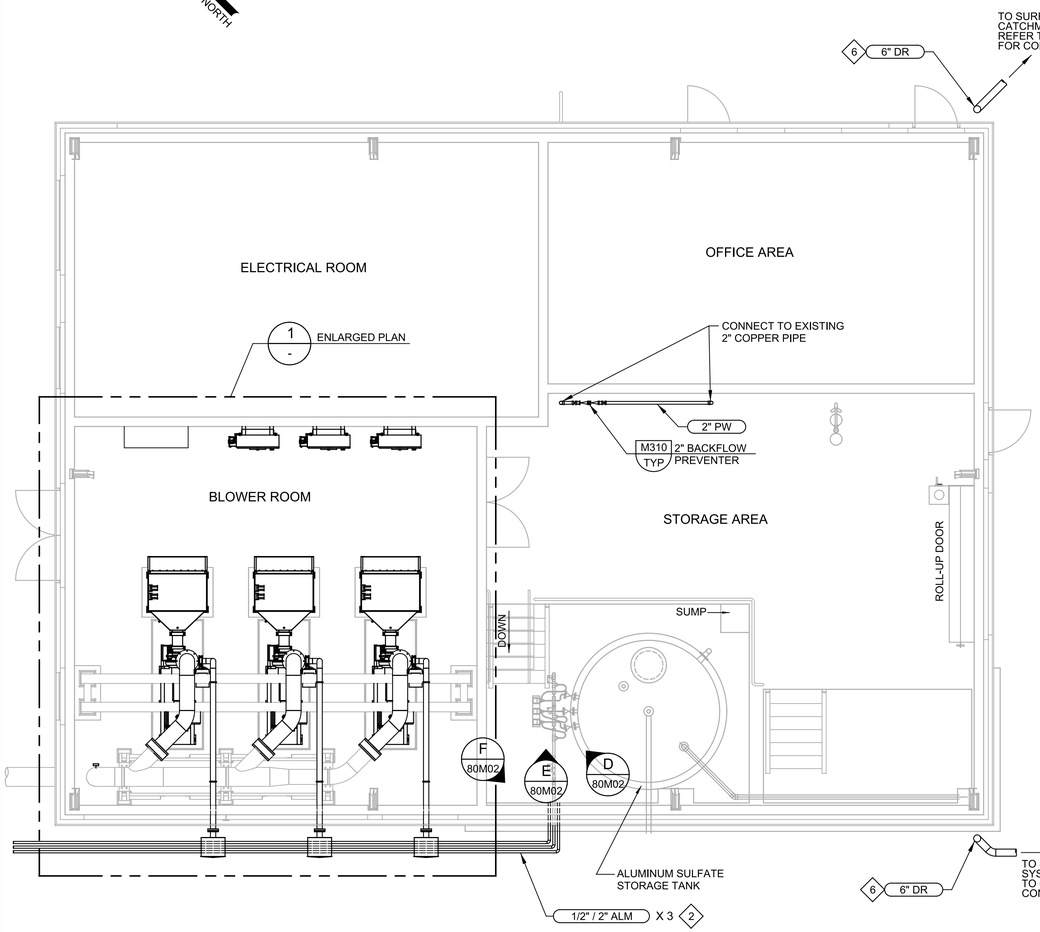

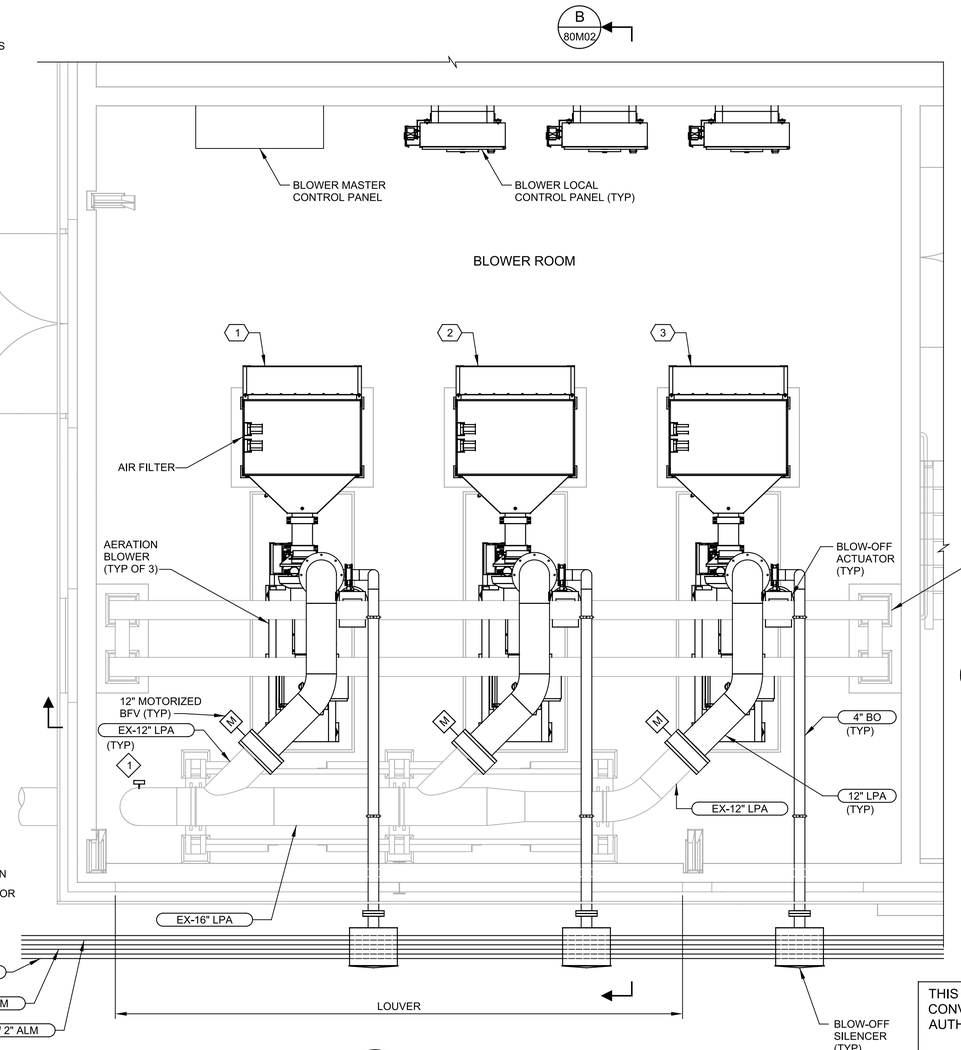

A PLAN

SCALE: 3/16" = 1'-0"
FILE: 10976A1081M101

1 ENLARGED PLAN

SCALE: 3/8" = 1'-0"
FILE: 10976A1081M101

GENERAL NOTES:

1. FOR MECHANICAL GENERAL NOTES, LEGEND, AND SYMBOLS, SEE DRAWING 00GM01.
2. REFER TO CIVIL SHEETS FOR PIPING CONTINUATION IN THE YARD.

KEY NOTES:

1 MOUNT PRESSURE INDICATING TRANSMITTER ON EXISTING 1-¼" SS PIPE DOWNSTREAM OF BALL VALVE.

2 REFER TO PIPE SCHEDULE ON SHEET 00G21 FOR DOUBLE CONTAINMENT PIPE REQUIREMENTS.

3 TO AERATION BASIN 4. REFER TO YARD PIPING SHEETS FOR CONTINUATION.

4 TO AERATION BASIN 1. REFER TO YARD PIPING SHEETS FOR CONTINUATION.

5 TO SLUDGE HOLDING TANK NO. 1. REFER TO YARD PIPING SHEETS FOR CONTINUATION.

6 6" DRAIN TO CONNECT TO BUILDING DOWNSPOUTS ABOVE GROUND AND STORM DRAIN SYSTEM IN THE YARD. REFER TO 80M03 FOR DOWNSPOUTS.

X EQUIPMENT TAGS:

1	AERATION BLOWER NO. 1	OPS-BLOWER-01
2	AERATION BLOWER NO. 2	OPS-BLOWER-02
3	AERATION BLOWER NO. 3	OPS-BLOWER-03

THIS CONFORMED DOCUMENT IS RELEASED FOR THE CONVENIENCE OF THE CONTRACTOR UNDER THE AUTHORITY OF:

11-01-22
DANNY M HURTADO, P.E. DATE
TX LIC NO. 104266

SEE DISCLAIMER FOR LIMITATIONS OF USE.

CONTRACT DOCUMENTS DATED JUNE 10, 2022, AS PART OF THE BIDDING DOCUMENTS (DRAWINGS AND SPECIFICATIONS) AND SUBSEQUENTLY ISSUED ADDENDA HAVE BEEN MERGED INTO ONE CONFORMING SET OF DOCUMENTS FOR THE CONVENIENCE OF THE CONTRACTOR. IF INCONSISTENCIES OR AMBIGUITIES BETWEEN "CONFORMED" DOCUMENTS AND CONTRACT DOCUMENTS ARE FOUND, THE CONTRACT DOCUMENTS SHALL GOVERN.

REV	DATE	BY	DESCRIPTION
			CONFORMED DOCUMENTS

DESIGNED JPH
DRAWN LGD
CHECKED DMH
DATE NOVEMBER 2022

** ORIGINAL SEALED BY DANNY M. HURTADO 06-10-22 TX PE 104266 **

carollo®
TBPELS No. F-882

CITY OF AUSTIN
FOUNDED 1839

CITY OF AUSTIN

CITY OF AUSTIN
WILD HORSE RANCH WWTP EXPANSION
MECHANICAL
OPERATIONS BUILDING PLANS

VERIFY SCALES
BAR IS ONE INCH ON ORIGINAL DRAWING
0 1"
IF NOT ONE INCH ON THIS SHEET, ADJUST SCALES ACCORDINGLY

JOB NO. 10976A.00
DRAWING NO. 80M01
SHEET NO. 440 OF 464

PROJECT NO. 10976A10 FILE NAME: 10976A1080M001.dgn

Plot Date: 11-OCT-2022 9:19:24 AM
User: LDietzel
PlotScale: 1:1
DesignScript: Carollo_Std_Pen_v0905.pen
ColorTable: gshade.ctb
Model: Layout1
LAST SAVED BY: ldietzel

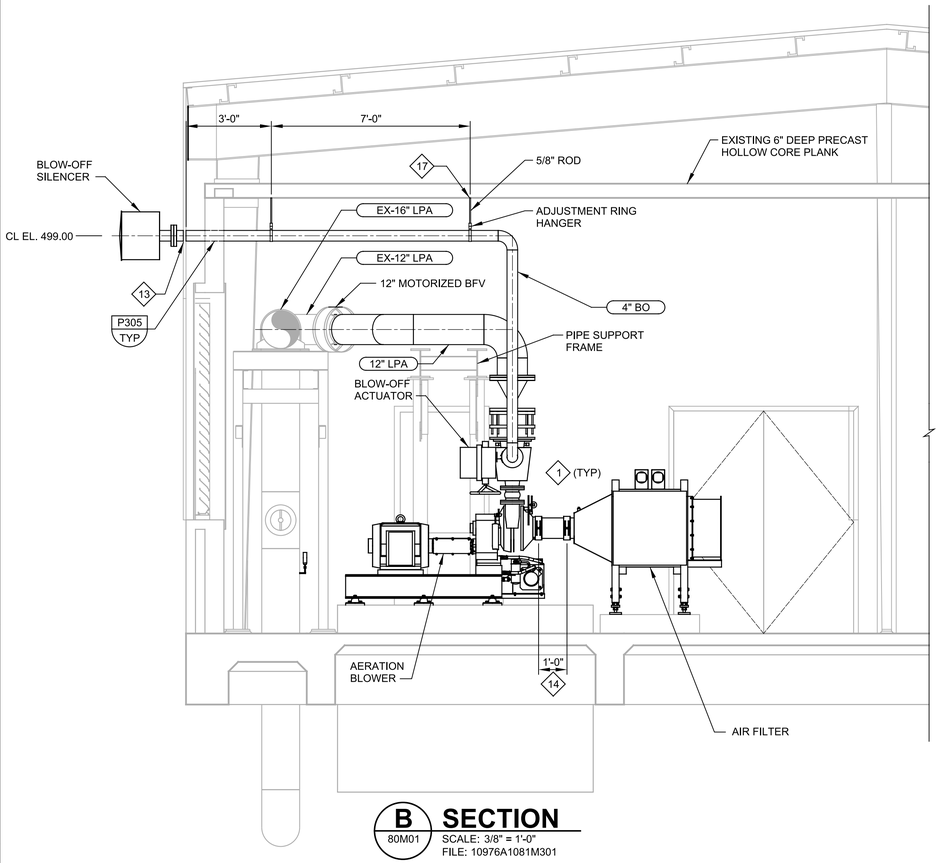

B SECTION

80M01 SCALE: 3/8" = 1'-0"
FILE: 10976A1081M301

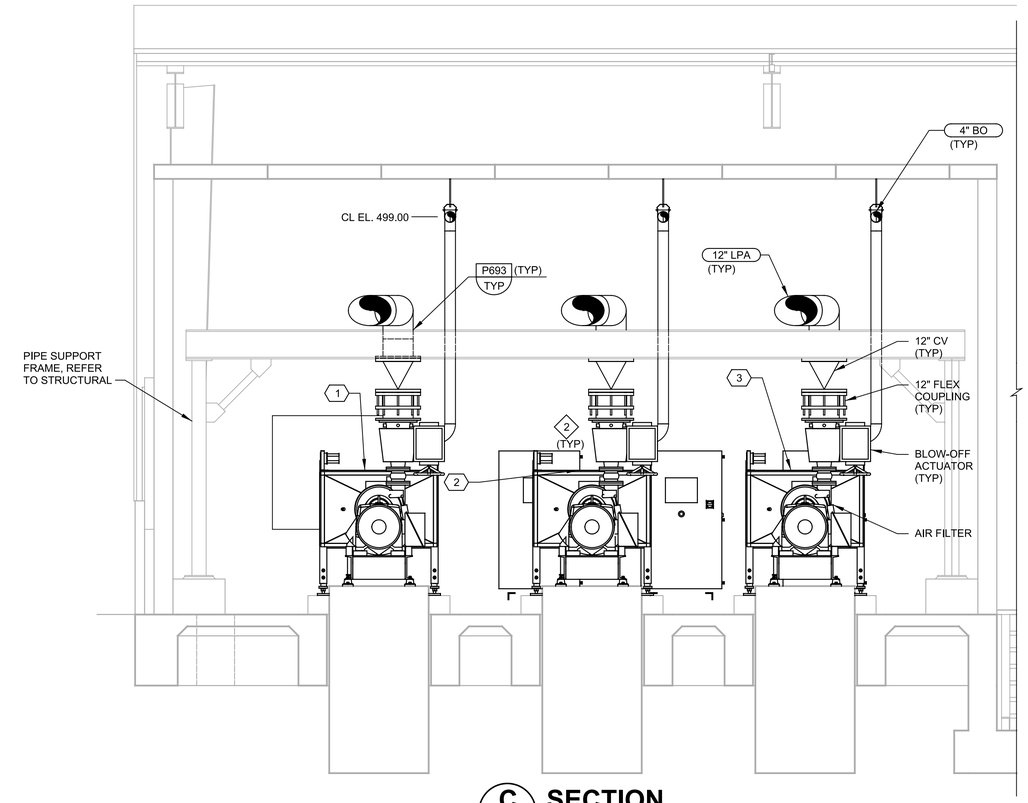

C SECTION

80M01 SCALE: 3/8" = 1'-0"
FILE: 10976A1081M302

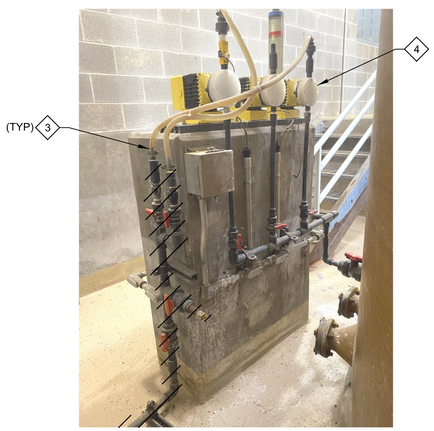

D ALUM PIPING DEMOLITION DETAIL

80M01 SCALE: NO SCALE
FILE: 10976A1080M02A

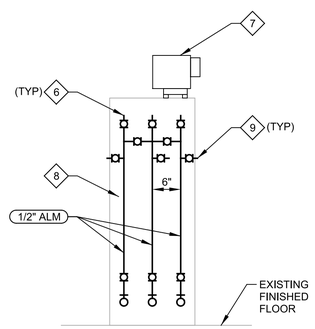

E PROPOSED ALUM PIPING DETAIL - 1

80M01 SCALE: 3/4" = 1'-0"
FILE: 10976A1080M401

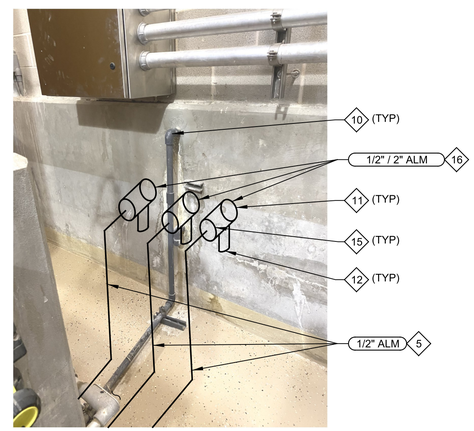

F PROPOSED ALUM PIPING DETAIL - 2

80M01 SCALE: NO SCALE
FILE: 10976A1080M02B

GENERAL NOTES:

1. FOR MECHANICAL GENERAL NOTES, LEGEND, AND SYMBOLS, SEE DRAWING 00GM01.
2. REFER TO CIVIL SHEETS FOR PIPING CONTINUATION IN THE YARD.
3. THE ABILITY OF THE PLANT TO FEED ALUM TO THE AERATION BASIN SHALL BE MAINTAINED AT ALL TIMES. ANY SHUTDOWNS ARE TO BE APPROVED BY THE OWNER. REFER TO SPECIFICATION 01140 - WORK RESTRICTIONS FOR SHUTDOWN REQUIREMENTS.

X KEY NOTES:

1 PROVIDE SINGLE STAGE BLOWER AND ASSOCIATED EQUIPMENT PER SPECIFICATION SECTION 11375.

2 COORDINATE WITH MANUFACTURER THAT THE BLOW OFF REDUCER PROVIDES A 12" OUTLET DIAMETER.

3 DEMOLISH EXISTING CHEMICAL FEED HOSE TO PUMPS.

4 EXISTING PUMPS, SUCTION PIPING, TANK, AND APPURTENANCES ARE TO BE PRESERVED AND REUSED.

5 SUPPORT PIPING PER TYPICAL DETAIL P660.

6 INSTALL HOSE BARB AND NYLON BRAIDED PVC HOSE SIMILAR TO EXISTING CONFIGURATION.

7 ATTACH BRAIDED PVC HOSE TO EXISTING PUMPS SIMILAR TO EXISTING CONFIGURATION.

8 ALUM PIPING TO BE FIELD ROUTED AROUND EXISTING ELECTRICAL CONDUIT NOT SHOWN.

9 INSTALL HOSE CONNECTION FOR FLUSHING.

10 DEMOLISH EXISTING ALUM PIPING AND FILL WALL PENETRATION WITH NON-SHRINK GROUT.

11 CORE THROUGH WALL AND INSTALL NEW ALUM PIPE PER TYPICAL DETAIL P305. CENTERLINE OF PENETRATION SHALL BE MINIMUM 24" AFF. COORDINATE ELEVATION OF PENETRATION WITH DOUBLE CONTAINMENT PIPE MANUFACTURER TO ENSURE THERE IS ENOUGH CLEARANCE FOR LEAK DETECTION STATION AND FLOOR.

12 LEAK DETECTION STATION WITH DRAIN VALVE AND SIGHT GLASS ON CONTAINMENT PIPE. REFER TO SPECIFICATIONS FOR REQUIREMENTS.

13 CUT CLEAN HOLE IN EXTERIOR METAL SIDING TO ACCOMMODATE 4" PIPE. HOLE SHALL BE CIRCULAR WITH DIAMETER NO GREATER THAN 6".

14 PROVIDE TWO FLEX COUPLINGS BETWEEN COMPRESSOR AND FILTER. PROVIDE MINIMUM DISTANCE SHOWN.

15 TRANSITION FROM DOUBLE CONTAINMENT PIPING WITH TERMINATION FITTING.

16 REFER TO PIPE SCHEDULE ON SHEET 00G21 FOR DOUBLE CONTAINMENT PIPE REQUIREMENTS.

17 INSTALL 3/8" DIA, 3" LONG THREADED ROD WITH HILTI HIT-HY 270 ADHESIVE.

X EQUIPMENT TAGS:

1	AERATION BLOWER NO. 1	OPS-BLOWER-01
2	AERATION BLOWER NO. 2	OPS-BLOWER-02
3	AERATION BLOWER NO. 3	OPS-BLOWER-03

THIS CONFORMED DOCUMENT IS RELEASED FOR THE CONVENIENCE OF THE CONTRACTOR UNDER THE AUTHORITY OF:

DANNY M HURTADO, P.E. 11-01-22
TX LIC NO. 104266 DATE

SEE DISCLAIMER FOR LIMITATIONS OF USE.

CONTRACT DOCUMENTS DATED JUNE 10, 2022, AS PART OF THE BIDDING DOCUMENTS (DRAWINGS AND SPECIFICATIONS) AND SUBSEQUENTLY ISSUED ADDENDA HAVE BEEN MERGED INTO ONE CONFORMING SET OF DOCUMENTS FOR THE CONVENIENCE OF THE CONTRACTOR. IF INCONSISTENCIES OR AMBIGUITIES BETWEEN "CONFORMED" DOCUMENTS AND CONTRACT DOCUMENTS ARE FOUND, THE CONTRACT DOCUMENTS SHALL GOVERN.

REV	DATE	BY	DESCRIPTION
			CONFORMED DOCUMENTS

DESIGNED JPH
DRAWN LGD
CHECKED DMH
DATE NOVEMBER 2022

** ORIGINAL SEALED BY DANNY M. HURTADO 06-10-22 TX PE 104266 **

carollo® TBPELS No. F-882

CITY OF AUSTIN — FOUNDED 1839

CITY OF AUSTIN

CITY OF AUSTIN
WILD HORSE RANCH WWTP EXPANSION
MECHANICAL
OPERATIONS BUILDING SECTIONS

VERIFY SCALES
BAR IS ONE INCH ON ORIGINAL DRAWING
0 1"
IF NOT ONE INCH ON THIS SHEET, ADJUST SCALES ACCORDINGLY

JOB NO. 10976A.00
DRAWING NO. 80M02
SHEET NO. 441 OF 464

PROJECT NO. 10976A10 FILE NAME: 10976A1080M002.dgn

Plot Date: 11-OCT-2022 9:26:28 AM
User: LDietzel
PlotScale: 1:1
DesignScript: Carollo_Std_Pen_v0905.pen
ColorTable: gshade.ctb
Model: Layout1
LAST SAVED BY: ldietzel

Plot Date: 11-OCT-2022 9:28:17 AM
User: LDietzel
PlotScale: 1:1
DesignScript: Carollo_Std_Pen_v0905.pen
ColorTable: gshade.ctb
Model: Layout1
LAST SAVED BY: ldietzel

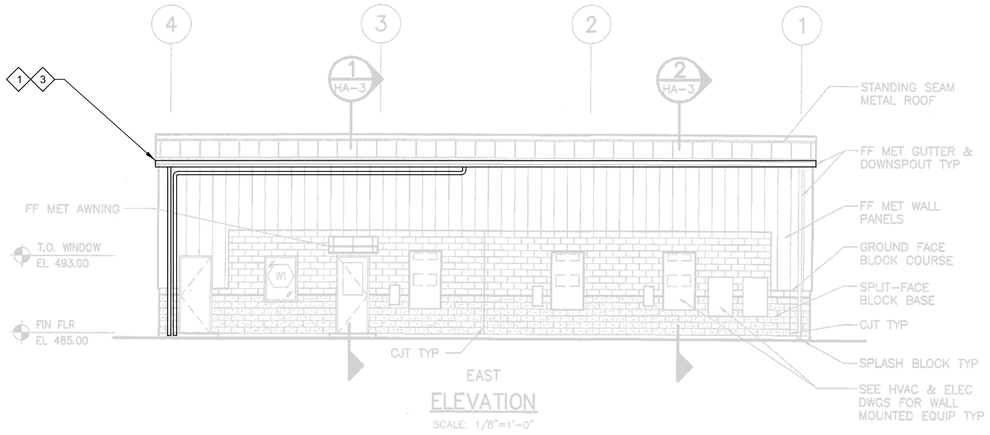

EAST
ELEVATION
SCALE: 1/8"=1'-0"

SOUTH
ELEVATION
SCALE: 1/8"=1'-0"

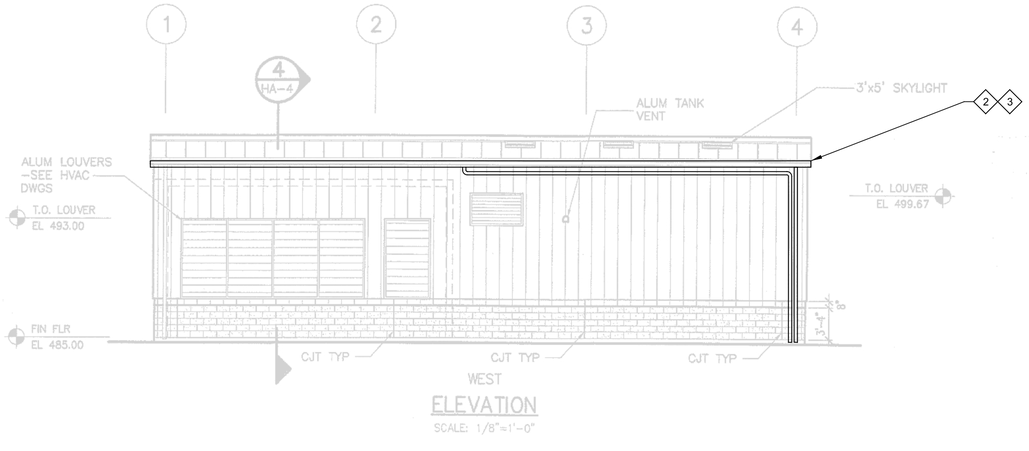

WEST
ELEVATION
SCALE: 1/8"=1'-0"

NORTH
ELEVATION
SCALE: 1/8"=1'-0"

GENERAL NOTES:

1. THIS IS A RECORD DRAWING FROM A PREVIOUS CONTRACT. ACTUAL FIELD CONDITIONS MAY BE DIFFERENT FROM THOSE SHOWN ON THIS DRAWING. CONTRACTOR SHALL FIELD VERIFY INSTALLED CONDITIONS PRIOR TO INITIATING WORK.

KEY NOTES:

1 REPLACE GUTTER AND DOWNSPOUTS TO CONVEY DRAINGE TO SOUTHEAST CORNER OF BUILDING USING TWO DOWNSPOUTS, AS SHOWN. HORIZONTAL SECTION OF DOWNSPOUT SHALL MATCH GUTTER SLOPE.

2 REPLACE GUTTER AND DOWNSPOUTS TO CONVEY DRAINGE TO SOUTHWEST CORNER OF BUILDING USING TWO DOWNSPOUTS, AS SHOWN. HORIZONTAL SECTION OF DOWNSPOUT SHALL MATCH GUTTER SLOPE.

3 REFER TO SECTION 07714 FOR GUTTER AND DOWNSPOUT REQUIREMENTS.

THIS CONFORMED DOCUMENT IS RELEASED FOR THE CONVENIENCE OF THE CONTRACTOR UNDER THE AUTHORITY OF:

11-01-22
DANNY M HURTADO, P.E. DATE
TX LIC NO. 104266

SEE DISCLAIMER FOR LIMITATIONS OF USE.

CONTRACT DOCUMENTS DATED JUNE 10, 2022, AS PART OF THE BIDDING DOCUMENTS (DRAWINGS AND SPECIFICATIONS) AND SUBSEQUENTLY ISSUED ADDENDA HAVE BEEN MERGED INTO ONE CONFORMING SET OF DOCUMENTS FOR THE CONVENIENCE OF THE CONTRACTOR. IF INCONSISTENCIES OR AMBIGUITIES BETWEEN "CONFORMED" DOCUMENTS AND CONTRACT DOCUMENTS ARE FOUND, THE CONTRACT DOCUMENTS SHALL GOVERN.

REV	DATE	BY	DESCRIPTION
			CONFORMED DOCUMENTS

DESIGNED JPH
DRAWN LGD
CHECKED DMH
DATE NOVEMBER 2022

** ORIGINAL SEALED BY DANNY M. HURTADO 06-10-22 TX PE 104266 **

carollo®
TBPELS No. F-882

CITY OF AUSTIN
FOUNDED 1839

CITY OF AUSTIN

CITY OF AUSTIN
WILD HORSE RANCH WWTP EXPANSION
MECHANICAL
OPERATIONS BUILDING ELEVATIONS

VERIFY SCALES
BAR IS ONE INCH ON ORIGINAL DRAWING
0 1"
IF NOT ONE INCH ON THIS SHEET, ADJUST SCALES ACCORDINGLY

JOB NO. 10976A.00
DRAWING NO. 80M03
SHEET NO. 442 OF 464

PROJECT NO. 10976A10 FILE NAME: 10976A1080M003.dgn

NOTES

1. SIZES OF EQUIPMENT PADS INDICATED ON THE DRAWINGS ARE APPROXIMATE. EXACT DIMENSIONS SHALL BE DETERMINED BY THE CONTRACTOR FOR THE EQUIPMENT FURNISHED. ALL FLOOR MOUNTED EQUIPMENT SHALL BE SET ON CONCRETE PADS CONFORMING TO DETAILS SHOWN ON THE TYPICAL STRUCTURAL DRAWINGS.
2. DIELECTRIC COUPLINGS, FLANGES OR UNIONS SHALL BE INSTALLED AT ALL CONNECTIONS OF COPPER PIPE TO OTHER TYPES OF METALLIC PIPING.
3. HVAC PIPING AND DUCTWORK DRAWINGS DO NOT SHOW ALL DRAINS, VENTS, OFFSETS AND FITTINGS ETC. REQUIRED FOR THE COMPLETE SYSTEM. SMALL PIPING IS SHOWN APPROXIMATELY TO SCALE BUT NOT EVERY FITTING AND OFFSET IS SHOWN. THE CONTRACTOR SHALL FURNISH, INSTALL AND TEST ALL HVAC SYSTEMS TO PROVIDE THE COMPLETE SYSTEM.
4. UNLESS OTHERWISE SHOWN ON THE DRAWINGS ALL FLOOR SLAB AND WALL PENETRATIONS SHALL BE AS SHOWN ON THE TYPICAL DETAILS.
5. NOT ALL AND ONLY CERTAIN TYPES OF SUPPORTS ARE SHOWN ON THE HVAC DRAWINGS. UNLESS OTHERWISE DETAILED ON THE DRAWINGS ALL PIPE AND DUCT SUPPORTS SHALL BE DESIGNED, FURNISHED AND INSTALLED BY THE CONTRACTOR AS SPECIFIED.
6. THIS IS A GENERAL LIST OF SYMBOLS. NOT ALL ITEMS SHOWN HERE APPEAR ON CONTRACT DRAWINGS.
7. TYPICAL DETAILS SHALL BE USED FOR ALL PERMANENT WORK EVEN THOUGH THEY ARE NOT CALLED OUT AT ALL LOCATIONS WHERE THEY APPLY.
8. COORDINATE FINAL LOUVER SIZE AND LOCATION WITH ARCHITECTURAL AND STRUCTURAL DRAWINGS.
9. PROVIDE TURNING VANES IN ALL ELBOWS. (SHOWN OR NOT)

ABBREVIATIONS

A	@	AT
	AC	AIR CONDITIONING
	AFF	ABOVE FINISHED FLOOR
	AFS	AIR FLOW SWITCH
	AHU	AIR HANDLING UNIT
B	BD	BALANCING DAMPER
	BDD	BACKDRAFT DAMPER
	BLR	BOILER
	BOD	BOTTOM OF DUCT
C	CH	CHILLER
	CO	CARBON MONOXIDE DETECTOR
	CT	COOLING TOWER
	CS	CURRENT SENSOR
	CU	CONDENSING UNIT
D	DG	DOOR GRILLE
	DP	DIFFERENTIAL PRESSURE
E	EA	EXHAUST AIR
	ECU	EVAPORATIVE COOLING UNIT
	EF	EXHAUST FAN
	EUH	ELECTRIC UNIT HEATER
F	FA	FOUL AIR
	FCU	FAN COIL UNIT
	FD	FIRE DAMPER
G	GUH	GAS UNIT HEATER
H	HP	HEAT PUMP
M	MAU	MAKEUP AIR UNIT
	MD	MOTORIZED DAMPER
N	NC	NORMALLY CLOSED
	NO	NORMALLY OPEN
O	OA	OUTSIDE AIR
	OCF	ODOR CONTROL FAN
P	PPU	POSITIVE PRESSURIZATION UNIT
R	RA	RETURN AIR
	RR	RETURN REGISTER OR GRILLE
S	SA	SUPPLY AIR
	SD	SMOKE DAMPER OR SMOKE DETECTOR
	SF	SUPPLY FAN
	SFD	SMOKE & FIRE DAMPER COMBINATION
	SR	SUPPLY REGISTER, GRILLE OR DIFFUSER
V	VAV	VARIABLE AIR VOLUME
W	WUH	WATER UNIT HEATER

DUCTWORK SYMBOLS

FEATURE	SYMBOL
DIRECTION OF FLOW	
DUCT SIZE- FIRST NUMBER IS SIDE SHOWN	12x20
ROUND DUCT	12 DIA OR 12"Ø
DUCT SECTION, POSITIVE PRESS FIRST NUMBER IS TOP	20x12
DUCT SECTION, NEGATIVE PRESS FIRST NUMBER IS TOP	20x12
SIDE MOUNT DEVICE	
ELEVATION CHANGE (R) RISE, (D) DROP	R
ACCESS DOOR	AD / AD
BOTTOM MOUNT DEVICE REGISTER, GRILLE, DIFFUSER OR DUCT TAKEOFF	
FLEXIBLE CONNECTION	
FLEXIBLE DUCT	OR
DUCT INSULATION	
TURNING VANES	
RECTANGULAR TO RECTANGULAR TRANSITION	20x12 16x8
RECTANGULAR TO ROUND TRANSITION	20x12 16 Ø
POSITIVE PRESSURE DUCT - ELBOW TURNED UP (USE ONE DIAGONAL FOR NEGATIVE PRESSURE)	
POSITIVE PRESSURE DUCT - ELBOW TURNED DOWN (USE ONE DIAGONAL FOR NEGATIVE PRESSURE)	
SMOKE DETECTOR CONFIRM ORIENTATION OF INSTALLATION	

DAMPERS

BACKDRAFT	
BALANCING	
FIRE W/ ACCESS DOOR	FD
MOTORIZED	M
SMOKE CONFIRM ORIENTATION OF INSTALLATION	
COMBINATION SMOKE AND FIRE CONFIRM ORIENTATION OF INSTALLATION	

EQUIPMENT SYMBOLS

FEATURE	SYMBOL
A/C OR HEAT PUMP COMPRESSOR	
CENTRIFUGAL FAN	
CONTROL PANEL	
COOLING COIL	C / C
CURRENT SENSOR	CS
DIRECT EXPANSION COIL	D / X
DUCT SMOKE DETECTOR	
ELECTRIC HEATER	
FILTER	
AIR FLOW SWITCH	AFS
GAS HEATER	
HUMIDISTAT	H
INLINE/AXIAL FAN	
MOTOR OPERATED VALVE	M
ROOF/SIDEWALL FAN	
ROOF VENT OR ROOF FAN	
SOLENOID VALVE	S
THERMOSTAT 60" ABOVE FINISH FLOOR	T
UNIT HEATER (HORIZONTAL TYPE)	
UNIT HEATER (VERTICAL TYPE)	
PRESSURE DIFFERENTIAL SWITCH	PD

NOTE: THIS IS A GENERAL LIST OF SYMBOLS AND ABBREVIATIONS. NOT ALL ITEMS SHOWN HERE APPEAR ON THE CONTRACT DRAWINGS.

REGISTERS, GRILLES & LOUVERS SYMBOLS

FEATURE	SYMBOL
LOUVER/BRICK VENT - FIXED	
LOUVER/BRICK VENT - OPERABLE	
TRANSFER GRILLE	
TO SPACE	
FROM SPACE	
SUPPLY DIFFUSER OR GRILLE ARROWS INDICATE FLOW DIRECTION	
RETURN DIFFUSER OR GRILLE ARROWS INDICATE FLOW DIRECTION	
EXHAUST DIFFUSER OR GRILLE ARROWS INDICATE FLOW DIRECTION	

LEGEND FOR REGISTERS & GRILLES

TYPE OF REGISTER OR GRILLE (AS DESCRIBED IN SPECIFICATIONS) — SR-1(B)/12x12 — BOOT (IF REQ'D) — NECK SIZE

CFM — 400/4 — FLOW PATTERN; SIDEWALL-ADJUSTABLE; C-CORNER

	SUPPLY	RETURN	EXHAUST
DUCT UP THRU ROOF OR FLOOR			
DUCT UP			
DUCT DOWN			

THIS CONFORMED DOCUMENT IS RELEASED FOR THE CONVENIENCE OF THE CONTRACTOR UNDER THE AUTHORITY OF:

DANNY M HURTADO, P.E.
TX LIC NO. 104266

11-01-22
DATE

SEE DISCLAIMER FOR LIMITATIONS OF USE.

CONTRACT DOCUMENTS DATED JUNE 10, 2022, AS PART OF THE BIDDING DOCUMENTS (DRAWINGS AND SPECIFICATIONS) AND SUBSEQUENTLY ISSUED ADDENDA HAVE BEEN MERGED INTO ONE CONFORMING SET OF DOCUMENTS FOR THE CONVENIENCE OF THE CONTRACTOR. IF INCONSISTENCIES OR AMBIGUITIES BETWEEN "CONFORMED" DOCUMENTS AND CONTRACT DOCUMENTS ARE FOUND, THE CONTRACT DOCUMENTS SHALL GOVERN.

REV	DATE	BY	DESCRIPTION
			CONFORMED DOCUMENTS

DESIGNED CE
DRAWN CE
CHECKED CE
DATE NOVEMBER 2022

** ORIGINAL SEALED BY CHAD GREEN 06-10-22 TX PE 119980 **

carollo®
TBPELS No. F-882

CITY OF AUSTIN — FOUNDED 1839

CITY OF AUSTIN

CITY OF AUSTIN
WILD HORSE RANCH WWTP EXPANSION
HVAC
GENERAL NOTES, ABBREVIATIONS AND SYMBOLS

VERIFY SCALES
BAR IS ONE INCH ON ORIGINAL DRAWING
0 — 1"
IF NOT ONE INCH ON THIS SHEET, ADJUST SCALES ACCORDINGLY

JOB NO. 10976A.00
DRAWING NO. 00H01
SHEET NO. 443 OF 464

PROJECT NO. 10976A10 FILE NAME: 10976A1000H001.dgn

Plot Date: 11-OCT-2022 9:31:41 AM
User: LDietzel
PlotScale: 1:1
DesignScript: Carollo_Std_Pen_v0905.pen
ColorTable: gshade.ctb
Model: Layout1
LAST SAVED BY: ldietzel

Plot Date: 11-OCT-2022 9:34:08 AM
User: LDietzel
PlotScale: 1:1
DesignScript: Carollo_Std_Pen_v0905.pen
ColorTable: gshade.ctb
Model: Layout1
LAST SAVED BY: JGiardini

FAN SCHEDULE

EQUIPMENT TAG	AREA SERVED	FAN TYPE	FLOW TYPE	AIRFLOW (CFM)	MIN. ESP (WC)	FAN RPM	MOTOR HP	MOTOR FLA	MOTOR RPM	MOTOR VOLTAGE	MOTOR ENCLOSURE	MOTOR DRIVE	BASIS OF DESIGN	NOTES
AD-BLDG1-EF-01	ADMIN BUILDING - MEZZANINE	TYPE 14	EXHAUST	5400	0.75	799	1-1/2	3.0	1725	460	TEFC	BELT	GREENHECK CUBE-WALL-240	1, 3, 4, 5, 6, 7, 9, 10, 16, 19
AD-BLDG1-EF-02	ADMIN BUILDING - RESTROOM	TYPE 5	EXHAUST	170	0.75	1100	N/A	2.2	N/A	115	ODP	DIRECT	CSP-B200	11, 12, 13, 14, 16
AD-BLDG1-EF-03	ADMIN BUILDING - RESTROOM	TYPE 5	EXHAUST	170	0.75	1100	N/A	2.2	N/A	115	ODP	DIRECT	CSP-B200	11, 12, 13, 14, 16
AD-BLDG1-EF-04	ADMIN BUILDING - CUSTODIAN	TYPE 5	EXHAUST	45	0.85	900	N/A	1.0	N/A	115	ODP	DIRECT	CSP-A200	11, 12, 13, 14, 16
HW-BLDG1-VF-01	HEADWORKS - LOWER	TYPE 4	SUPPLY	1790	0.40	876	1/3	N/A	1725	460	TEFC	BELT	GREENHECK SBCS-3H24	2, 3, 4, 7, 8, 9, 10, 16, 17
LS-WW1-VF-01	LIFT STATION - VAULT	TYPE 10	SUPPLY	1410	0.10	1750	1/4	N/A	1750	115	ODP	DIRECT	GREENHECK AS-12	2, 10, 15, 16, 18

LEGEND:

1) PROVIDE BIRD SCREEN.
2) PROVIDE INSECT SCREEN.
3) PROVIDE BACKDRAFT DAMPER, COUNTERBALANCED FOR MINIMUM PRESSURE LOSS.
4) PROVIDE ADJUSTABLE BELT SHEAVES.
5) PROVIDE MANUFACTURERS WALL MOUNTED UNIT WITH ALL NECESSARY HARDWARE AND ACCESSORIES.
6) PROVIDE THERMOSTAT AS SPECIFIED IN SECTION 15936.
7) PROVIDE VIBRATION ISOLATORS.
8) PROVIDE FILTERS AND RELATED ACCESSORIES PER 15830.
9) PROVIDE PROTECTIVE COATING PER 15830.
10) DISCONNECT SWITCH TO BE PROVIDED BY ELECTRICAL CONTRACTOR. DISCONNECTS SHALL BE NEMA 4X, ENCLOSED CIRCUIT BREAKER TYPE.
11) CENTRIFUGAL CEILING MOUNTED FAN EXHAUST FAN WITH INTEGRAL BACKDRAFT DAMPERS.
12) FANS SHALL BE INTERLOCKED WITH LIGHT SWITCH.
13) PROVIDE MANUFACTURERS ALUMINUM GRILLE WITH WHITE ENAMEL FINISH.
14) DISCONNECT SWITCH TO BE PROVIDED BY ELECTRICAL CONTRACTOR. DISCONNECTS SHALL BE NEMA 12, ENCLOSED CIRCUIT BREAKER TYPE.
15) DOUBLE SHIELDED BALL BEARING MOTORS ISOLATED ON SHOCK MOUNTS.
16) CONTROL SYSTEM SPECIFIED IN SECTION 15936.
17) PROVIDE TEFC MOTOR ENCLOSURE AND WIRING SUITABLE FOR CLASS I, DIV. 2 LOCATIONS.
18) PROVIDE MANUFACTURER CONSTRUCTED ROOF CURB 18 INCHES TALL.
19) PROVIDE DUCT SMOKE DETECTOR WIRED TO SHUT DOWN EQUIPMENT.

ELECTRIC UNIT HEATER SCHEDULE

EQUIPMENT TAG	AREA DESCRIPTION	INPUT CAPACITY (kW)	OUTPUT CAPACITY (MBH)	AIR TEMP (F) EAT (F)	AIR TEMP (F) LAT (F)	AIRFLOW (CFM)	MCA (AMPS)	V/Phase	BASIS OF DESIGN	NOTES
AD-BLDG1-UH-01	ADMIN BUILDING - OPEN AREA	3	10.2	55	69	700	5	480 / 3	INDEECO TRIAD 3KW	1, 2, 3, 4, 7
AD-BLDG1-UH-02	ADMIN BUILDING - OPEN AREA	3	10.2	55	69	700	5	480 / 3	INDEECO TRIAD 3KW	1, 2, 3, 4, 7
AD-BLDG1-UH-03	ADMIN BUILDING - OPEN AREA	3	10.2	55	69	700	5	480 / 3	INDEECO TRIAD 3KW	1, 2, 3, 4, 7
AD-BLDG1-UH-04	ADMIN BUILDING - OPEN AREA	3	10.2	55	69	700	5	480 / 3	INDEECO TRIAD 3KW	1, 2, 3, 4, 7
AD-BLDG1-UH-05	ADMIN BUILDING - OPEN AREA	3	10.2	55	69	700	5	480 / 3	INDEECO TRIAD 3KW	1, 2, 3, 4, 7
AD-BLDG1-UH-06	ADMIN BUILDING - OPEN AREA	3	10.2	55	69	700	5	480 / 3	INDEECO TRIAD 3KW	1, 2, 3, 4, 7
HW-BLDG1-UH-01	HEADWORKS - LOWER LEVEL	5	17.0	55	79	700	8.1	480 / 3	INDEECO COMPACT 5KW	2, 4, 5, 6, 7
HW-BLDG1-UH-02	HEADWORKS - LOWER LEVEL	5	17.0	55	79	700	8.1	480 / 3	INDEECO COMPACT 5KW	2, 4, 5, 6, 7
HW-BLDG1-UH-03	HEADWORKS - LOWER LEVEL	5	17.0	55	79	700	8.1	480 / 3	INDEECO COMPACT 5KW	2, 4, 5, 6, 7
HW-BLDG1-UH-04	HEADWORKS - LOWER LEVEL	5	17.0	55	79	700	8.1	480 / 3	INDEECO COMPACT 5KW	2, 4, 5, 6, 7
HW-BLDG1-UH-05	HEADWORKS - LOWER LEVEL	5	17.0	55	79	700	8.1	480 / 3	INDEECO COMPACT 5KW	2, 4, 5, 6, 7

NOTES:

1) REMOTE THERMOSTAT PROVIDED BY HEATER MANUFACTURER.
2) WALL MOUNTED.
3) 120-VOLT CONTROL VOLTAGE.
4) ELECTRIC POWERED.
5) PROVIDE UNIT SUITABLE FOR CLASS I, DIV. 2 LOCATIONS
6) INTEGRATED THERMOSTAT PROVIDED BY HEATER MANUFACTURER.
7) CONTROL SYSTEM SPECIFIED IN SECTION 15936.

HEAT PUMP SCHEDULE

EQUIPMENT TAG	AREA DESCRIPTION	AIRFLOW (CFM)	ESP (IN W.C)	COOLING DATA EAT DB/WB (°F)	COOLING DATA AMBIENT TEMP (°F)	COOLING DATA LAT DB/WB (°F)	COOLING DATA NET TOTAL/SENS CAPACITY (MBH)	HEATING DATA EAT DB (°F)	HEATING DATA LAT DB (°F)	HEATING DATA ELECTRIC HEATING CAPACITY (kW)	HEATING DATA NET MECHANICAL HEATING CAPACITY	ELECTRICAL DATA VOLTS	PH	HZ	MCA	MOCP	BASIS OF DESIGN	NOTES
AD-HVAC-13	ADMIN BUILDING - OFFICE AREA	2400	0.55	80 / 67	105	56/55	90/64	-	70	14.96	60.0	460	3	60	26	30	TRANE TWE09	4, 5, 6, 10, 11, 12, 15, 16
AD-HVAC-03	ADMIN BUILDING - OFFICE AREA	-	-	-	-	-	-	-	-	-	-	460	3	60	15	20	TRANE TWA09	6, 7, 8, 9, 14
AD-HVAC-14	ADMIN BUILDING - ELECTRIC ROOM	2100	0.75	80 / 67	105	56/55	74/54	-	70	5	46.0	460	3	60	11	15	TRANE TWE07	4, 5, 6, 11, 12, 15, 16
AD-HVAC-04	ADMIN BUILDING - ELECTRIC ROOM	-	-	-	-	-	-	-	-	-	-	460	3	60	14	20	TRANE TWA07	6, 7, 8, 9, 14
AD-HVAC-15	ADMIN BUILDING - ELECTRIC ROOM	2100	0.75	80 / 67	105	56/55	74/54	-	70	5	46.0	460	3	60	11	15	TRANE TWE07	4, 5, 6, 11, 12, 15, 16
AD-HVAC-05	ADMIN BUILDING - ELECTRIC ROOM	-	-	-	-	-	-	-	-	-	-	460	3	60	14	20	TRANE TWA07	6, 7, 8, 9, 14
SUB1-HVAC-02	ELECTRICAL BUILDING	6660	0.85	80 / 67	98	56/55	243/171	-	70	10	166	460	3	60	23	25	TRANE TWE24	4, 5, 6, 11, 12, 13, 15, 16
SUB1-HVAC-01	ELECTRICAL BUILDING	-	-	-	-	-	-	-	-	-	-	460	3	60	46	60	TRANE TWA24	6, 7, 8, 9, 14
SUB1-HVAC-04	ELECTRICAL BUILDING	6660	0.85	80 / 67	98	56/55	243/171	-	70	10	166	460	3	60	23	25	TRANE TWE24	4, 5, 6, 11, 12, 13, 15, 16
SUB1-HVAC-03	ELECTRICAL BUILDING	-	-	-	-	-	-	-	-	-	-	460	3	60	46	60	TRANE TWA24	6, 7, 8, 9, 14
AD-HVAC-08	ADMIN BUILDING - IT/SCADA SERVER	425	-	95/71	-	67/57	12/9.6	80	70	-	18	208	1	60	1	-	MITSUBISHI PKA-A12	1, 4, 5, 6
AD-HVAC-01	ADMIN BUILDING - IT/SCADA SERVER	-	-	-	-	-	-	-	-	-	-	208	1	60	11	28	MITSUBISHI PUZ-A12	2, 6, 7, 8, 9
AD-HVAC-09	ADMIN BUILDING - IT/SCADA SERVER	425	-	95/71	-	67/57	12/9.6	80	70	-	18	208	1	60	1	-	MITSUBISHI PKA-A12	1, 4, 5, 6
AD-HVAC-02	ADMIN BUILDING - IT/SCADA SERVER	-	-	-	-	-	-	-	-	-	-	208	1	60	11	28	MITSUBISHI PUZ-A12	2, 6, 7, 8, 9
AD-HVAC-11	ADMIN BUILDING - UV PANELS	705	-	95/71	-	67/57	24/18.48	80	70	-	28	208	1	60	1	-	MITSUBISHI PKA-A24	1, 4, 5, 6
AD-HVAC-06	ADMIN BUILDING - UV PANELS	-	-	-	-	-	-	-	-	-	-	208	1	60	19	26	MITSUBISHI PUZ-A24	2, 6, 7, 8, 9
AD-HVAC-12	ADMIN BUILDING - UV PANELS	705	-	95/71	-	67/57	24/18.48	80	70	-	28	208	1	60	1	-	MITSUBISHI PKA-A24	1, 4, 5, 6
AD-HVAC-07	ADMIN BUILDING - UV PANELS	-	-	-	-	-	-	-	-	-	-	208	1	60	19	26	MITSUBISHI PUZ-A24	2, 6, 7, 8, 9

NOTES:

1) MINISPLIT HEAT PUMP WALL MOUNT FAN COIL UNIT. INDOOR FAN COIL UNIT SHALL BE POWERED FROM OUTDOOR UNIT.
2) MINISPLIT HEAT PUMP OUTDOOR UNIT.
3) INDOOR AHU UNIT SHALL BE POWERED FROM OUTDOOR UNIT THROUGH FIELD SUPPLIED INTERCONNECTED WIRING.
4) PROVIDE MANUFACTURER WIRED PROGRAMMABLE THERMOSTAT.
5) PROVIDE WITH CONDENSATE LIFT PUMP.
6) CONTROL SYSTEM SPECIFIED IN SECTION 15936.
7) SPLIT SYSTEM OUTDOOR UNIT MOUNTED ON CONCRETE EQUIPMENT SLAB.
8) PROVIDE HAIL GUARDS AND WIND BAFFLES ON OUTDOOR UNIT.
9) PROVIDE OUTDOOR UNIT SIZED PER AIR HANDLER MANUFACTURER TO PROVIDE COOLING/HEATING REQUIREMENTS AS INDICATED.
10) PROVIDE WITH ECONOMIZER.
11) SIDE RETURN; TOP DISCHARGE CONFIGURATION.
12) INCLUDE SERVICE OPTION FOR DUCT SMOKE DETECTOR SENSOR TO BE WIRED IN FIELD TO SHUT DOWN UNIT UPON DETECTION SMOKE AS SPECIFIED IN SECTION 15936.
13) PROVIDE PROTECTIVE SCREEN AT RETURN AIR OPENING.
14) PROVIDE WITH LOW AMBIENT COOLING OPTION.
15) PROVIDE WITH AUXILIARY ELECTRIC HEATER.
16) PROVIDE WITH LEVEL SWITCH AND FLOAT ACCESSORY FOR HIGH CONDENSATE ALARM OF DRAIN PAN.

THIS CONFORMED DOCUMENT IS RELEASED FOR THE CONVENIENCE OF THE CONTRACTOR UNDER THE AUTHORITY OF:

DANNY M HURTADO, P.E.
TX LIC NO. 104266

11-01-22
DATE

SEE DISCLAIMER FOR LIMITATIONS OF USE.

CONTRACT DOCUMENTS DATED JUNE 10, 2022, AS PART OF THE BIDDING DOCUMENTS (DRAWINGS AND SPECIFICATIONS) AND SUBSEQUENTLY ISSUED ADDENDA HAVE BEEN MERGED INTO ONE CONFORMING SET OF DOCUMENTS FOR THE CONVENIENCE OF THE CONTRACTOR. IF INCONSISTENCIES OR AMBIGUITIES BETWEEN "CONFORMED" DOCUMENTS AND CONTRACT DOCUMENTS ARE FOUND, THE CONTRACT DOCUMENTS SHALL GOVERN.

REV	DATE	BY	DESCRIPTION
			CONFORMED DOCUMENTS

DESIGNED TPL
DRAWN JRG
CHECKED CAG
DATE NOVEMBER 2022

** ORIGINAL SEALED BY CHAD GREEN 06-10-22 TX PE 119980 **

carollo®
TBPELS No. F-882

CITY OF AUSTIN
FOUNDED 1839

CITY OF AUSTIN

CITY OF AUSTIN
WILD HORSE RANCH WWTP EXPANSION
HVAC
EQUIPMENT SCHEDULES 1

VERIFY SCALES
BAR IS ONE INCH ON ORIGINAL DRAWING
0 1"
IF NOT ONE INCH ON THIS SHEET, ADJUST SCALES ACCORDINGLY

JOB NO. 10976A.00
DRAWING NO. 00H02
SHEET NO. 444 OF 464

PROJECT NO. 10976A10 FILE NAME: 10976A1000H002.dgn

Plot Date: 11-OCT-2022 9:35:44 AM
User: LDietzel
Model: Layout1 ColorTable: gshade.ctb DesignScript: Carollo_Std_Pen_v0905.pen PlotScale: 1:1
LAST SAVED BY: JGiardini

POSITIVE PRESSURE UNIT SCHEDULE

EQUIPMENT TAG	AREA SERVED	UNIT TYPE	UNIT CONFIG.	TOTAL AIRFLOW (CFM)	PRESS. AIR (CFM)	RECIRC. AIR (CFM)	PRIMARY GAS CONT.	DIM. (WxDxH) (IN.)	ENT RANGE (°F)	ENT RH (%)	SOUND DATA (DBA)	WEIGHT (LBS.)	PREFILTER		MEDIA FILTERS					AFTER FILTER		FINAL FILTER		FAN DATA			MCA (Amps)	VOLTAGE	PHASE	BASIS OF DESIGN
													EFFICIENCY (%)	MEDIA DEPTH (IN.)	ODOR FILTER STAGES	ODOR FILTER MEDIA	MEDIA QUANTITY (CU FT)	MEDIA DENSITY (LB/CU FT)	H2S ABSORPTION CAPACITY (G/CC)	EFFICIENCY (%)	MEDIA DEPTH (IN.)	EFFICIENCY (%)	MEDIA DEPTH (IN.)	ESP (IN. W.G.)	TSP (IN. W.G.)	MOTOR ENCLOSURE				
SUB1-HVAC-05	ELECTRIC BLDG	PACKAGED INDOOR, FLOOR MOUNTED	VERTICAL DOWNFLOW	900	0	900	H2S	28 X 31 X 88	55-85	40-60	63	750	30	2	2	MM-9000	2	38	0.16	30	2	90	6	0.5	PER MFGR.	TEFC	5	480	3	CIRCUL-AIRE APS-1000-2VD
SUB1-HVAC-06	ELECTRIC BLDG	PACKAGED INDOOR, FLOOR MOUNTED	VERTICAL DOWNFLOW	900	0	900	H2S	28 X 31 X 88	55-85	40-60	63	750	30	2	2	MM-9000	2	38	0.16	30	2	90	6	0.5	PER MFGR.	TEFC	5	480	3	CIRCUL-AIRE APS-1000-2VD
AD-HVAC-23	ADMIN BLDG - ELEC ROOM	PACKAGED INDOOR, FLOOR MOUNTED	VERTICAL DOWNFLOW	500	0	500	H2S	28 X 31 X 88	55-85	40-60	63	750	30	2	2	MM-9000	2	38	0.16	30	2	90	6	0.5	PER MFGR.	TEFC	5	480	3	CIRCUL-AIRE APS-1000-2VD
AD-HVAC-10	ADMIN BLDG - IT/SCADA	PACKAGED INDOOR, FLOOR MOUNTED	VERTICAL DOWNFLOW	500	0	500	H2S	28 X 31 X 88	55-85	40-60	63	750	30	2	2	MM-9000	2	38	0.16	30	2	90	6	0.5	PER MFGR.	TEFC	5	480	3	CIRCUL-AIRE APS-1000-2VD

NOTES:

1) ALL UNITS WILL BE RECIRCULATING ROOM AIR ONLY.
2) MANUFACTURER TO PROVIDE SUPPLY AND INTAKE GRILLES ON ALL UNITS.

THIS CONFORMED DOCUMENT IS RELEASED FOR THE CONVENIENCE OF THE CONTRACTOR UNDER THE AUTHORITY OF:

DANNY M HURTADO, P.E.
TX LIC NO. 104266

11-01-22
DATE

SEE DISCLAIMER FOR LIMITATIONS OF USE.

CONTRACT DOCUMENTS DATED JUNE 10, 2022, AS PART OF THE BIDDING DOCUMENTS (DRAWINGS AND SPECIFICATIONS) AND SUBSEQUENTLY ISSUED ADDENDA HAVE BEEN MERGED INTO ONE CONFORMING SET OF DOCUMENTS FOR THE CONVENIENCE OF THE CONTRACTOR. IF INCONSISTENCIES OR AMBIGUITIES BETWEEN "CONFORMED" DOCUMENTS AND CONTRACT DOCUMENTS ARE FOUND, THE CONTRACT DOCUMENTS SHALL GOVERN.

REV	DATE	BY	DESCRIPTION
			CONFORMED DOCUMENTS

DESIGNED TPL
DRAWN JRG
CHECKED CAG
DATE NOVEMBER 2022

** ORIGINAL SEALED BY CHAD GREEN 06-10-22 TX PE 119980 **

carollo®
TBPELS No. F-882

CITY OF AUSTIN
FOUNDED 1839
CITY OF AUSTIN

CITY OF AUSTIN
WILD HORSE RANCH WWTP EXPANSION
HVAC
EQUIPMENT SCHEDULES 2

VERIFY SCALES
BAR IS ONE INCH ON ORIGINAL DRAWING
0 1"
IF NOT ONE INCH ON THIS SHEET, ADJUST SCALES ACCORDINGLY

JOB NO. 10976A.00
DRAWING NO. 00H03
SHEET NO. 445 OF 464

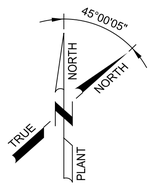

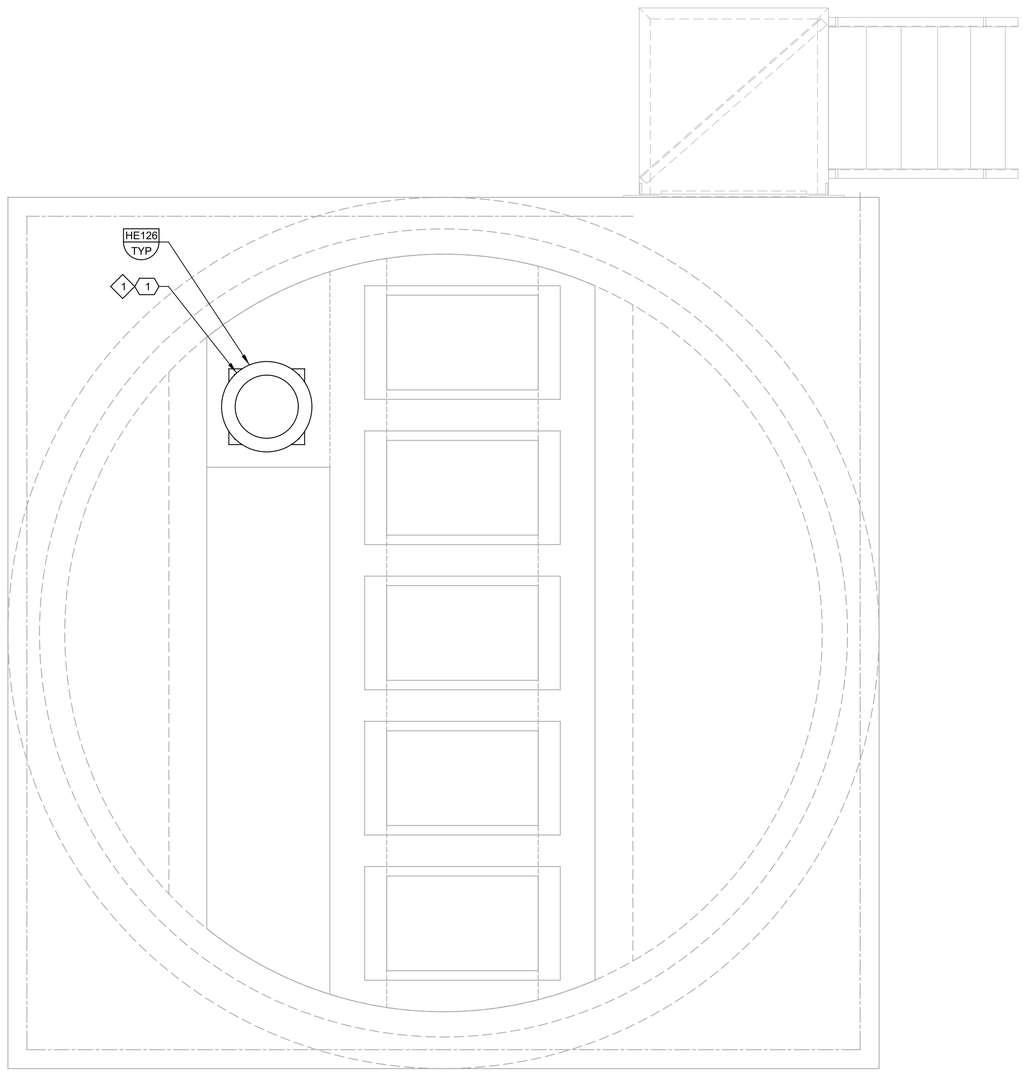

A PLAN

SCALE: 1/2" = 1'-0"
FILE: 10976A1010H101

GENERAL NOTES:

1. REFER TO STRUCTURAL DRAWINGS FOR ROOF OPENING DETAILS.

KEY NOTES:

1 ROOF MOUNTED PROPELLER HOODED DIRECT DRIVE SUPPLY FAN. PROVIDE 18-INCH-TALL MANUFACTURED EQUIPMENT CURB TO INTEGRATE WITH CONCRETE ROOF CURB.

EQUIPMENT TAGS:

1	LS SUPPLY FAN NO. 1	LS-WW1-VF-01

THIS CONFORMED DOCUMENT IS RELEASED FOR THE CONVENIENCE OF THE CONTRACTOR UNDER THE AUTHORITY OF:

DANNY M HURTADO, P.E.
TX LIC NO. 104266

11-01-22
DATE

SEE DISCLAIMER FOR LIMITATIONS OF USE.

CONTRACT DOCUMENTS DATED JUNE 10, 2022, AS PART OF THE BIDDING DOCUMENTS (DRAWINGS AND SPECIFICATIONS) AND SUBSEQUENTLY ISSUED ADDENDA HAVE BEEN MERGED INTO ONE CONFORMING SET OF DOCUMENTS FOR THE CONVENIENCE OF THE CONTRACTOR. IF INCONSISTENCIES OR AMBIGUITIES BETWEEN "CONFORMED" DOCUMENTS AND CONTRACT DOCUMENTS ARE FOUND, THE CONTRACT DOCUMENTS SHALL GOVERN.

REV	DATE	BY	DESCRIPTION
			CONFORMED DOCUMENTS

DESIGNED TPL
DRAWN KHB
CHECKED CAG
DATE NOVEMBER 2022

** ORIGINAL SEALED BY CHAD GREEN 06-10-22 TX PE 119980 **

carollo®
TBPELS No. F-882

CITY OF AUSTIN

CITY OF AUSTIN
WILD HORSE RANCH WWTP EXPANSION
HVAC
INFLUENT LIFT STATION PLAN

VERIFY SCALES
BAR IS ONE INCH ON ORIGINAL DRAWING
0 1"
IF NOT ONE INCH ON THIS SHEET, ADJUST SCALES ACCORDINGLY

JOB NO. 10976A.00
DRAWING NO. 10H01
SHEET NO. 446 OF 464

PROJECT NO. 10976A10 FILE NAME: 10976A1010H001.dgn

Plot Date: 11-OCT-2022 9:37:23 AM
User: LDietzel
Model: Layout1 ColorTable: gshade.ctb DesignScript: Carollo_Std_Pen_v0905.pen PlotScale: 1:1
LAST SAVED BY: ldietzel

Plot Date: 11-OCT-2022 9:39:00 AM
User: LDietzel
DesignScript: Carollo_Std_Pen_v0905.pen PlotScale: 1:1
ColorTable: gshade.ctb
Model: Layout1
LAST SAVED BY: ldietzel

X EQUIPMENT TAGS:

1	LS SUPPLY FAN NO. 1	LS-WW1-VF-01

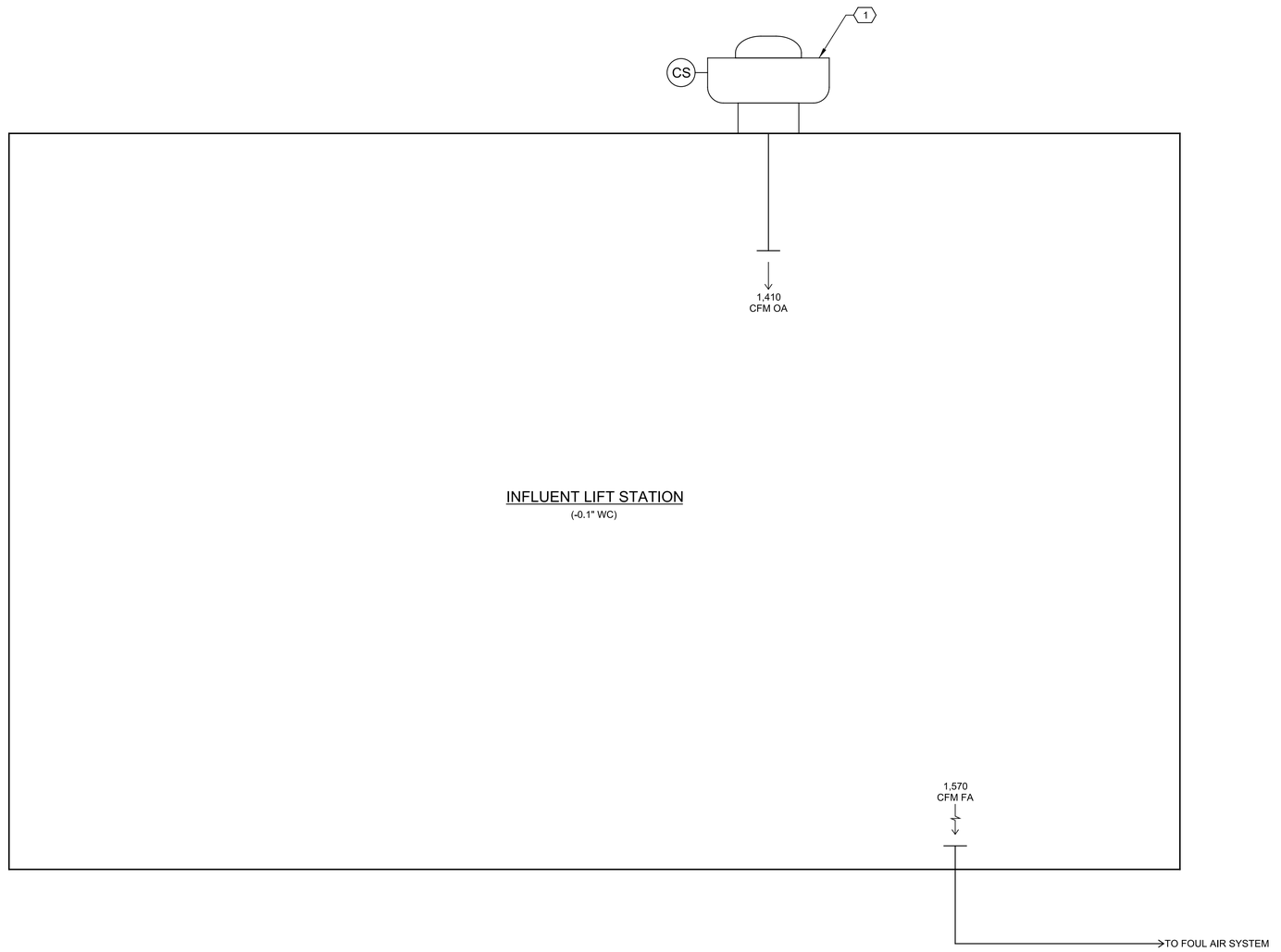

THIS CONFORMED DOCUMENT IS RELEASED FOR THE CONVENIENCE OF THE CONTRACTOR UNDER THE AUTHORITY OF:

DANNY M HURTADO, P.E.
TX LIC NO. 104266

11-01-22
DATE

SEE DISCLAIMER FOR LIMITATIONS OF USE.

CONTRACT DOCUMENTS DATED JUNE 10, 2022, AS PART OF THE BIDDING DOCUMENTS (DRAWINGS AND SPECIFICATIONS) AND SUBSEQUENTLY ISSUED ADDENDA HAVE BEEN MERGED INTO ONE CONFORMING SET OF DOCUMENTS FOR THE CONVENIENCE OF THE CONTRACTOR. IF INCONSISTENCIES OR AMBIGUITIES BETWEEN "CONFORMED" DOCUMENTS AND CONTRACT DOCUMENTS ARE FOUND, THE CONTRACT DOCUMENTS SHALL GOVERN.

REV	DATE	BY	DESCRIPTION
			CONFORMED DOCUMENTS

DESIGNED TPL
DRAWN JRG
CHECKED CAG
DATE NOVEMBER 2022

** ORIGINAL SEALED BY CHAD GREEN 06-10-22 TX PE 119980 **

carollo®
TBPELS No. F-882

CITY OF AUSTIN
FOUNDED 1839
CITY OF AUSTIN

CITY OF AUSTIN
WILD HORSE RANCH WWTP EXPANSION
HVAC
INFLUENT LIFT STATION AIRFLOW SCHEMATIC

VERIFY SCALES
BAR IS ONE INCH ON ORIGINAL DRAWING
0 1"
IF NOT ONE INCH ON THIS SHEET, ADJUST SCALES ACCORDINGLY

JOB NO. 10976A.00
DRAWING NO. 10H02
SHEET NO. 447 OF 464

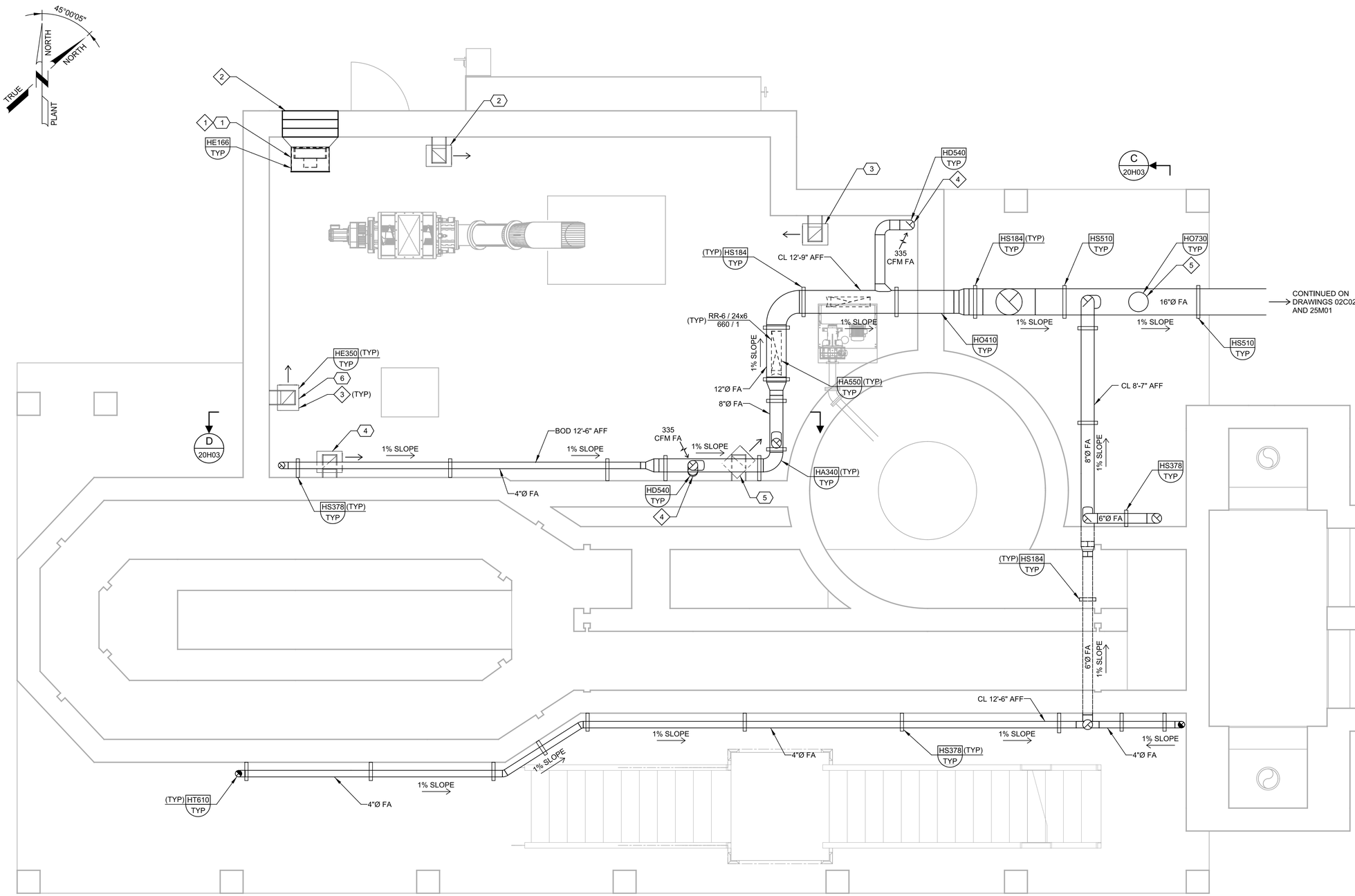

GENERAL NOTES:

1. ALL DUCTWORK IN THE SCREENINGS AREAS SHALL BE ROUND FRP. REFER TO SPECIFICATION SECTION 15814 FOR FRP DUCT REQUIREMENTS.
2. REFER TO STRUCTURAL DRAWINGS FOR WALL OPENING DETAILS.
3. DUCT SUPPORTS AND LOCATIONS ARE SHOWN FOR GENERAL REFERENCE ONLY. DUCT SUPPORTS SHALL BE 316 SST IN THE HEADWORKS. PROVIDE DUCT SUPPORTS PER SMACNA REQUIREMENTS, SECTION 15814 AND THE TYPICAL DETAILS.
4. MOUNT ALL THERMOSTATS/SENSORS AT 48" AFF AND LABEL WITH ITS CONTROL DEVICE.
5. PROVIDE ALL FRP ELBOWS WITH TURNING VANES PER TYPICAL DETAIL HA340/TYP.

KEY NOTES:

1 WALL MOUNTED PROPELLER SUPPLY FAN WITH INTAKE LOUVER. FAN SHALL BE CENTERED ON LOUVER.

2 34" X 34" INTAKE LOUVER (TYPE L-1). BOTTOM OF LOUVER AT 9'-4" AFF.

3 CLASS 1 DIV 2 RATED ELECTRIC UNIT HEATER MOUNTED TO WALL WITH BOTTOM OF HEATER AT 8'-0" AFF. PROVIDE HEATERS WITH INTEGRATED THERMOSTAT.

4 6" Ø FA DUCT DROP DOWN TO 12" AFF PER DETAIL HD540/TYP.

5 FOUL AIR DRAIN CONNECTS TO DRAIN LINE ON 20M02.

X EQUIPMENT TAGS:

1	HW SUPPLY FAN NO. 1	HW-BLDG1-VF-01
2	HW ELECTRIC UNIT HEATER NO. 1	HW-BLDG1-UH-01
3	HW ELECTRIC UNIT HEATER NO. 2	HW-BLDG1-UH-02
4	HW ELECTRIC UNIT HEATER NO. 3	HW-BLDG1-UH-03
5	HW ELECTRIC UNIT HEATER NO. 4	HW-BLDG1-UH-04
6	HW ELECTRIC UNIT HEATER NO. 5	HW-BLDG1-UH-05

A LOWER PLAN

SCALE: 3/8" = 1'-0"
FILE: 10976A1020H101

THIS CONFORMED DOCUMENT IS RELEASED FOR THE CONVENIENCE OF THE CONTRACTOR UNDER THE AUTHORITY OF:

DANNY M HURTADO, P.E.
TX LIC NO. 104266

11-01-22
DATE

SEE DISCLAIMER FOR LIMITATIONS OF USE.

CONTRACT DOCUMENTS DATED JUNE 10, 2022, AS PART OF THE BIDDING DOCUMENTS (DRAWINGS AND SPECIFICATIONS) AND SUBSEQUENTLY ISSUED ADDENDA HAVE BEEN MERGED INTO ONE CONFORMING SET OF DOCUMENTS FOR THE CONVENIENCE OF THE CONTRACTOR. IF INCONSISTENCIES OR AMBIGUITIES BETWEEN "CONFORMED" DOCUMENTS AND CONTRACT DOCUMENTS ARE FOUND, THE CONTRACT DOCUMENTS SHALL GOVERN.

REV	DATE	BY	DESCRIPTION
			CONFORMED DOCUMENTS

DESIGNED TPL
DRAWN KHB
CHECKED CAG
DATE NOVEMBER 2022

** ORIGINAL SEALED BY CHAD GREEN 06-10-22 TX PE 119980 **

carollo®
TBPELS No. F-882

CITY OF AUSTIN

CITY OF AUSTIN
WILD HORSE RANCH WWTP EXPANSION
HVAC
HEADWORKS BUILDING
LOWER PLAN

VERIFY SCALES
BAR IS ONE INCH ON ORIGINAL DRAWING
0 1"
IF NOT ONE INCH ON THIS SHEET, ADJUST SCALES ACCORDINGLY

JOB NO. 10976A.00
DRAWING NO. 20H01
SHEET NO. 448 OF 464

PROJECT NO. 10976A10 FILE NAME: 10976A1020H001.dgn

Plot Date: 11-OCT-2022 9:40:55 AM
User: LDietzel
PlotScale: 1:1
DesignScript: Carollo_Std_Pen_v0905.pen
ColorTable: gshade.ctb
Model: Layout1
LAST SAVED BY: JGiardini

Plot Date: 11-OCT-2022 9:42:42 AM
User: LDietzel
PlotScale: 1:1
DesignScript: Carollo_Std_Pen_v0905.pen
ColorTable: gshade.ctb
Model: Layout1
LAST SAVED BY: ldietzel

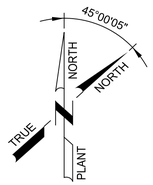

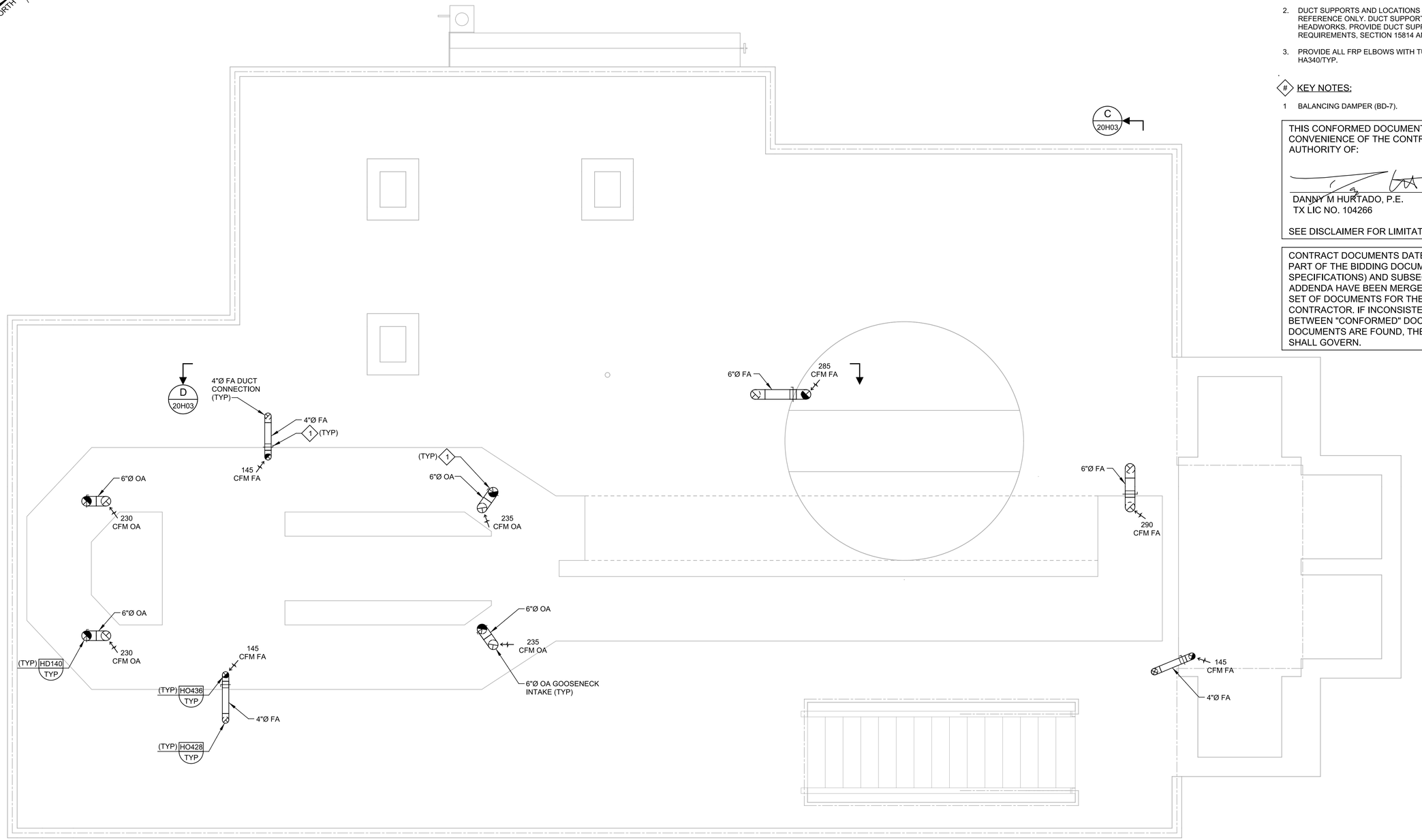

B UPPER PLAN

SCALE: 3/8" = 1'-0"
FILE: 10976A1020H102

GENERAL NOTES:

1. ALL DUCTWORK SHALL BE ROUND FRP. REFER TO SPECIFICATION SECTION 15814 FOR FRP DUCT REQUIREMENTS.
2. DUCT SUPPORTS AND LOCATIONS ARE SHOWN FOR GENERAL REFERENCE ONLY. DUCT SUPPORTS SHALL BE 316 SST IN THE HEADWORKS. PROVIDE DUCT SUPPORTS PER SMACNA REQUIREMENTS, SECTION 15814 AND THE TYPICAL DETAILS.
3. PROVIDE ALL FRP ELBOWS WITH TURNING VANES PER TYPICAL DETAIL HA340/TYP.

KEY NOTES:

1 BALANCING DAMPER (BD-7).

THIS CONFORMED DOCUMENT IS RELEASED FOR THE CONVENIENCE OF THE CONTRACTOR UNDER THE AUTHORITY OF:

11-01-22
DANNY M HURTADO, P.E. DATE
TX LIC NO. 104266

SEE DISCLAIMER FOR LIMITATIONS OF USE.

CONTRACT DOCUMENTS DATED JUNE 10, 2022, AS PART OF THE BIDDING DOCUMENTS (DRAWINGS AND SPECIFICATIONS) AND SUBSEQUENTLY ISSUED ADDENDA HAVE BEEN MERGED INTO ONE CONFORMING SET OF DOCUMENTS FOR THE CONVENIENCE OF THE CONTRACTOR. IF INCONSISTENCIES OR AMBIGUITIES BETWEEN "CONFORMED" DOCUMENTS AND CONTRACT DOCUMENTS ARE FOUND, THE CONTRACT DOCUMENTS SHALL GOVERN.

REV	DATE	BY	DESCRIPTION
			CONFORMED DOCUMENTS

DESIGNED TPL
DRAWN KHB
CHECKED CAG
DATE NOVEMBER 2022

** ORIGINAL SEALED BY CHAD GREEN 06-10-22 TX PE 119980 **

carollo®
TBPELS No. F-882

CITY OF AUSTIN
CITY OF AUSTIN
WILD HORSE RANCH WWTP EXPANSION
HVAC
HEADWORKS BUILDING
UPPER PLAN

VERIFY SCALES
BAR IS ONE INCH ON ORIGINAL DRAWING
0 1"
IF NOT ONE INCH ON THIS SHEET, ADJUST SCALES ACCORDINGLY

JOB NO. 10976A.00
DRAWING NO. 20H02
SHEET NO. 449 OF 464

PROJECT NO. 10976A10 FILE NAME: 10976A1020H002.dgn

THIS CONFORMED DOCUMENT IS RELEASED FOR THE CONVENIENCE OF THE CONTRACTOR UNDER THE AUTHORITY OF:

DANNY M HURTADO, P.E. 11-01-22
TX LIC NO. 104266 DATE

SEE DISCLAIMER FOR LIMITATIONS OF USE.

CONTRACT DOCUMENTS DATED JUNE 10, 2022, AS PART OF THE BIDDING DOCUMENTS (DRAWINGS AND SPECIFICATIONS) AND SUBSEQUENTLY ISSUED ADDENDA HAVE BEEN MERGED INTO ONE CONFORMING SET OF DOCUMENTS FOR THE CONVENIENCE OF THE CONTRACTOR. IF INCONSISTENCIES OR AMBIGUITIES BETWEEN "CONFORMED" DOCUMENTS AND CONTRACT DOCUMENTS ARE FOUND, THE CONTRACT DOCUMENTS SHALL GOVERN.

GENERAL NOTES:

1. ALL DUCTWORK SHALL BE ROUND FRP. REFER TO SPECIFICATION SECTION 15814 FOR FRP DUCT REQUIREMENTS.
2. DUCT SUPPORTS AND LOCATIONS ARE SHOWN FOR GENERAL REFERENCE ONLY. DUCT SUPPORTS SHALL BE 316 SST IN THE HEADWORKS. PROVIDE DUCT SUPPORTS PER SMACNA REQUIREMENTS, SECTION 15814 AND THE TYPICAL DETAILS.
3. PROVIDE ALL FRP ELBOWS WITH TURNING VANES PER TYPICAL DETAIL HA340/TYP.

KEY NOTES:

1. CLASS 1 DIV 2 RATED ELECTRIC UNIT HEATER MOUNTED TO WALL WITH BOTTOM OF HEATER AT 8'-0" AFF. PROVIDE HEATERS WITH INTEGRATED THERMOSTAT.

EQUIPMENT TAGS:

1	HW ELECTRIC UNIT HEATER NO. 3	HW-BLDG1-UH-03
2	HW ELECTRIC UNIT HEATER NO. 4	HW-BLDG1-UH-04

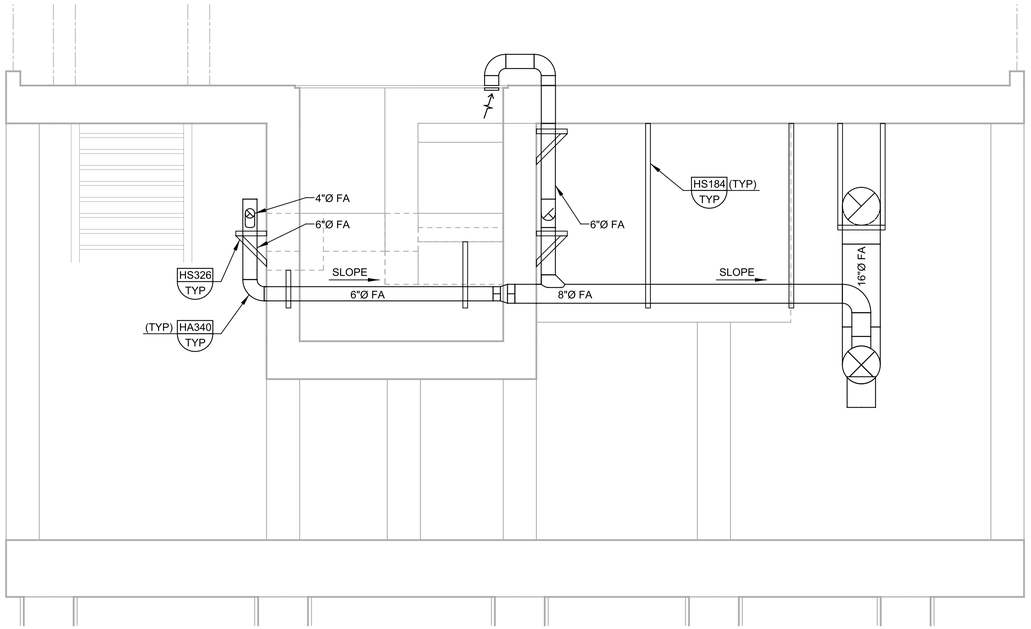

C SECTION
20H01 SCALE: 3/8" = 1'-0"
FILE: 10976A1020H301

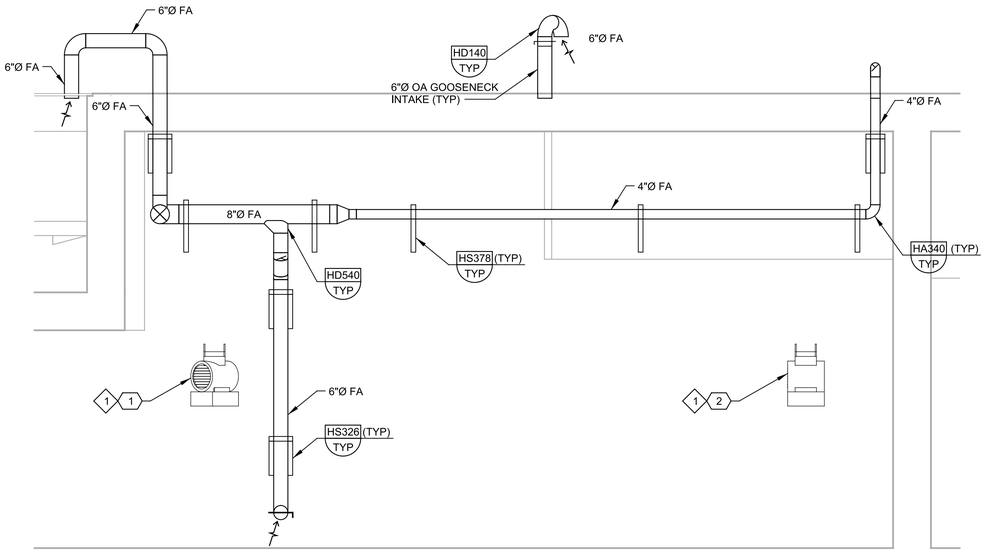

D SECTION
20H01 SCALE: 3/8" = 1'-0"
FILE: 10976A1020H302

REV	DATE	BY	DESCRIPTION
			CONFORMED DOCUMENTS

DESIGNED TPL
DRAWN KHB
CHECKED CAG
DATE NOVEMBER 2022

** ORIGINAL SEALED BY CHAD GREEN 06-10-22 TX PE 119980 **

carollo® TBPELS No. F-882

CITY OF AUSTIN

CITY OF AUSTIN
WILD HORSE RANCH WWTP EXPANSION
HVAC
HEADWORKS BUILDING SECTIONS

VERIFY SCALES
BAR IS ONE INCH ON ORIGINAL DRAWING
0 1"
IF NOT ONE INCH ON THIS SHEET, ADJUST SCALES ACCORDINGLY

JOB NO. 10976A.00
DRAWING NO. 20H03
SHEET NO. 450 OF 464

PROJECT NO. 10976A10 FILE NAME: 10976A1020H003.dgn

Plot Date: 11-OCT-2022 9:44:20 AM
User: LDietzel
PlotScale: 1:1
DesignScript: Carollo_Std_Pen_v0905.pen
ColorTable: gshade.ctb
Model: Layout1
LAST SAVED BY: ataylor

Plot Date: 11-OCT-2022 9:45:48 AM
User: LDietzel
Model: Layout1 ColorTable: gshade.ctb DesignScript: Carollo_Std_Pen_v0905.pen PlotScale: 1:1
LAST SAVED BY: ldietzel

X EQUIPMENT TAGS:

1	HW SUPPLY FAN NO. 1	HW-BLDG1-VF-01
2	HW ELECTRIC UNIT HEATER NO. 1	HW-BLDG1-UH-01
3	HW ELECTRIC UNIT HEATER NO. 2	HW-BLDG1-UH-02
4	HW ELECTRIC UNIT HEATER NO. 3	HW-BLDG1-UH-03
5	HW ELECTRIC UNIT HEATER NO. 4	HW-BLDG1-UH-04
6	HW ELECTRIC UNIT HEATER NO. 5	HW-BLDG1-UH-05

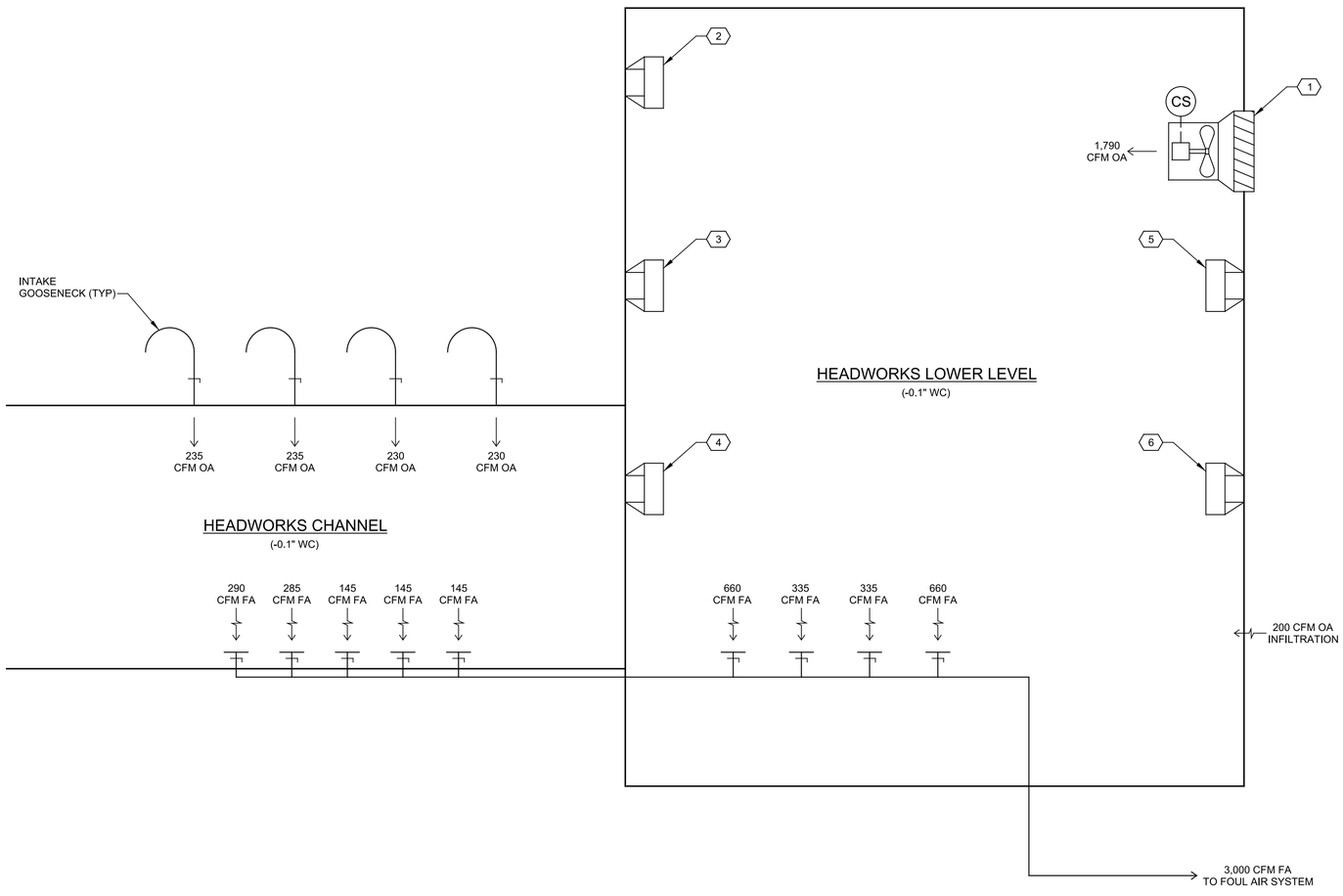

THIS CONFORMED DOCUMENT IS RELEASED FOR THE CONVENIENCE OF THE CONTRACTOR UNDER THE AUTHORITY OF:

11-01-22
DANNY M HURTADO, P.E. DATE
TX LIC NO. 104266

SEE DISCLAIMER FOR LIMITATIONS OF USE.

CONTRACT DOCUMENTS DATED JUNE 10, 2022, AS PART OF THE BIDDING DOCUMENTS (DRAWINGS AND SPECIFICATIONS) AND SUBSEQUENTLY ISSUED ADDENDA HAVE BEEN MERGED INTO ONE CONFORMING SET OF DOCUMENTS FOR THE CONVENIENCE OF THE CONTRACTOR. IF INCONSISTENCIES OR AMBIGUITIES BETWEEN "CONFORMED" DOCUMENTS AND CONTRACT DOCUMENTS ARE FOUND, THE CONTRACT DOCUMENTS SHALL GOVERN.

REV	DATE	BY	DESCRIPTION
			CONFORMED DOCUMENTS

DESIGNED TPL
DRAWN JRG
CHECKED CAG
DATE NOVEMBER 2022

** ORIGINAL SEALED BY CHAD GREEN 06-10-22 TX PE 119980 **

carollo®
TBPELS No. F-882

CITY OF AUSTIN

CITY OF AUSTIN
WILD HORSE RANCH WWTP EXPANSION
HVAC
HEADWORKS BUILDING AIRFLOW SCHEMATIC

VERIFY SCALES
BAR IS ONE INCH ON ORIGINAL DRAWING
0 1"
IF NOT ONE INCH ON THIS SHEET, ADJUST SCALES ACCORDINGLY

JOB NO. 10976A.00
DRAWING NO. 20H04
SHEET NO. 451 OF 464

PROJECT NO. 10976A10 FILE NAME: 10976A1020H004.dgn

Plot Date: 11-OCT-2022 9:47:27 AM
User: LDietzel
Model: Layout1 ColorTable: gshade.ctb DesignScript: Carollo_Std_Pen_v0905.pen PlotScale: 1:1
LAST SAVED BY: kbequette

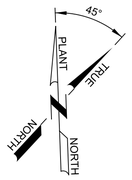

THIS CONFORMED DOCUMENT IS RELEASED FOR THE CONVENIENCE OF THE CONTRACTOR UNDER THE AUTHORITY OF:

DANNY M HURTADO, P.E.
TX LIC NO. 104266

11-01-22
DATE

SEE DISCLAIMER FOR LIMITATIONS OF USE.

CONTRACT DOCUMENTS DATED JUNE 10, 2022, AS PART OF THE BIDDING DOCUMENTS (DRAWINGS AND SPECIFICATIONS) AND SUBSEQUENTLY ISSUED ADDENDA HAVE BEEN MERGED INTO ONE CONFORMING SET OF DOCUMENTS FOR THE CONVENIENCE OF THE CONTRACTOR. IF INCONSISTENCIES OR AMBIGUITIES BETWEEN "CONFORMED" DOCUMENTS AND CONTRACT DOCUMENTS ARE FOUND, THE CONTRACT DOCUMENTS SHALL GOVERN.

GENERAL NOTES:

1. ALL DUCTWORK SHALL BE ALUMINUM.
2. MOUNT THERMOSTATS AT 48" ABOVE FINISHED FLOOR AND LABEL WITH ITS CORRESPONDING DEVICE.
3. DUCT SUPPORTS SHOWN FOR REFERENCE ONLY. REFER TO SPECIFICATION SECTION 15812, SMACNA AND TYPICAL DETAILS FOR ADDITIONAL REQUIREMENTS.
4. PROVIDE ALL ELBOWS WITH TURNING VANES PER TYPICAL DETAIL HA320/TYP.

(X) EQUIPMENT TAGS:

1	SUB1 HEAT PUMP NO. 1	SUB1-HVAC-01
2	SUB1 AIR HANDLING UNIT NO. 1	SUB1-HVAC-02
3	SUB1 HEAT PUMP NO. 2	SUB1-HVAC-03
4	SUB1 AIR HANDLING UNIT NO. 2	SUB1-HVAC-04
5	SUB1 POSITIVE PRESSURIZATION UNIT NO. 1	SUB1-HVAC-05
6	SUB1 POSITIVE PRESSURIZATION UNIT NO. 2	SUB1-HVAC-06

(#) KEY NOTES:

1 AIR HANDLING UNITS. PROVIDE EQUIPMENT PAD PER DETAIL S302/TYP.

2 HEAT PUMP UNITS. PROVIDE EQUIPMENT PAD PER DETAIL S300/TYP.

3 1 INCH SCHEDULE 40 PVC CONDENSATE DRAIN LINE. LINE TO TRAVEL ALONG WALL AND EXIT AS SHOWN. SLOPE LINE TO DRYWELL. INSULATE PER CONTRACT DOCUMENTS.

4 REFRIGERANT LINES ROUTED TO HEAT PUMP UNITS. LINES TO TRAVEL DOWN INTERIOR OF WALL BEFORE EXITING BUILDING. INSULATE PER CONTRACT DOCUMENTS.

5 AUXILIARY HEATER TO BE INSTALLED ON SUPPLY.

6 56X17 SA DUCT CONNECTS TO AUXILIARY HEATER. PROVIDE FLEXIBLE CONNECTION (FL-1). 56X14 SA DUCT TRANSITIONS IMMEDIATELY TO 36x20 SA AND CONNECTS TO 40X30 SA HEADER.

7 MANUFACTURERS REQUIRED CLEARANCE.

8 POSITIVE PRESSURE UNIT. PROVIDE EQUIPMENT PAD PER DETAIL S302/TYP.

9 DUCT MOUNTED SMOKE DETECTOR.

10 BACKDRAFT DAMPER (BDD-3).

11 56x32 LOUVER (TYPE L-1) PER DETAIL HE520/TYP EXCLUDING THE BACKDRAFT DAMPER, INSECT SCREEN AND BIRD SCREEN. BOTTOM OF LOUVER MOUNTED AT 2'-8" AFF.

12 MANUFACTURER WIRED PROGRAMMABLE THERMOSTAT.

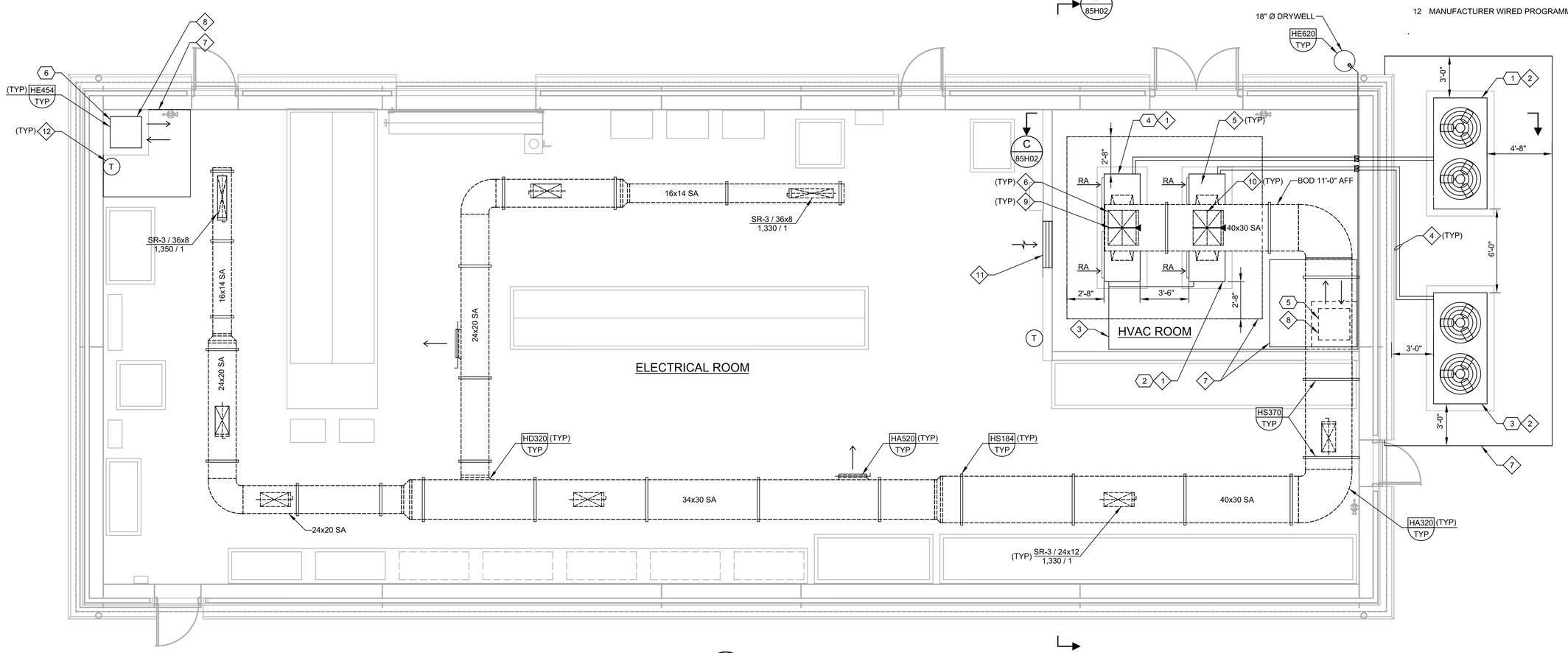

A PLAN

SCALE: 1/4" = 1'-0"
FILE: 10976A1085H101

REV	DATE	BY	DESCRIPTION
			CONFORMED DOCUMENTS

DESIGNED TPL
DRAWN KHB
CHECKED CAG
DATE NOVEMBER 2022

** ORIGINAL SEALED BY CHAD GREEN 06-10-22 TX PE 119980 **

carollo®
TBPELS No. F-882

CITY OF AUSTIN
FOUNDED 1839
CITY OF AUSTIN

CITY OF AUSTIN
WILD HORSE RANCH WWTP EXPANSION
HVAC
SUBSTATION NO. 1
PLAN

VERIFY SCALES
BAR IS ONE INCH ON ORIGINAL DRAWING
0 1"
IF NOT ONE INCH ON THIS SHEET, ADJUST SCALES ACCORDINGLY

JOB NO. 10976A.00
DRAWING NO. 85H01
SHEET NO. 452 OF 464

PROJECT NO. 10976A10 FILE NAME: 10976A1085H001.dgn

Plot Date: 11-OCT-2022 9:48:58 AM
User: LDietzel
Model: Layout1 ColorTable: gshade.ctb DesignScript: Carollo_Std_Pen_v0905.pen PlotScale: 1:1
LAST SAVED BY: ataylor

GENERAL NOTES:

1. ALL DUCTWORK SHALL BE ALUMINUM.
2. MOUNT THERMOSTATS AT 48" ABOVE FINISHED FLOOR AND LABEL WITH ITS CORRESPONDING DEVICE.
3. DUCT SUPPORTS SHOWN FOR REFERENCE ONLY. REFER TO SPECIFICATION SECTION 15812, SMACNA AND TYPICAL DETAILS FOR ADDITIONAL REQUIREMENTS.
4. PROVIDE ALL ELBOWS WITH TURNING VANES PER TYPICAL DETAIL HA32 0/TYP.

(#) KEY NOTES:

1 AUXILIARY HEATER TO BE INSTALLED ON SUPPLY. 56X17 SA DUCT CONNECTS TO AUXILIARY HEATER. PROVIDE FLEXIBLE CONNECTION (FL-1). 56X17 SA DUCT TRANSITIONS IMMEDIATELY TO 36x20 SA AND CONNECTS TO 40X30 SA HEADER.

2 DUCT MOUNTED SMOKE DETECTOR. PROVIDE ACCESS DOOR NEAR SMOKE DETECTOR.

3 BACKDRAFT DAMPER (BDD-3).

4 INTAKE SCREENS AT RETURN OPENINGS.

(X) EQUIPMENT TAGS:

1	SUB1 HEAT PUMP NO. 1	SUB1-HVAC-01
2	SUB1 AIR HANDLING UNIT NO. 1	SUB1-HVAC-02
3	SUB1 AIR HANDLING UNIT NO. 2	SUB1-HVAC-04
4	SUB1 POSITIVE PRESSURIZATION UNIT NO. 1	SUB1-HVAC-05

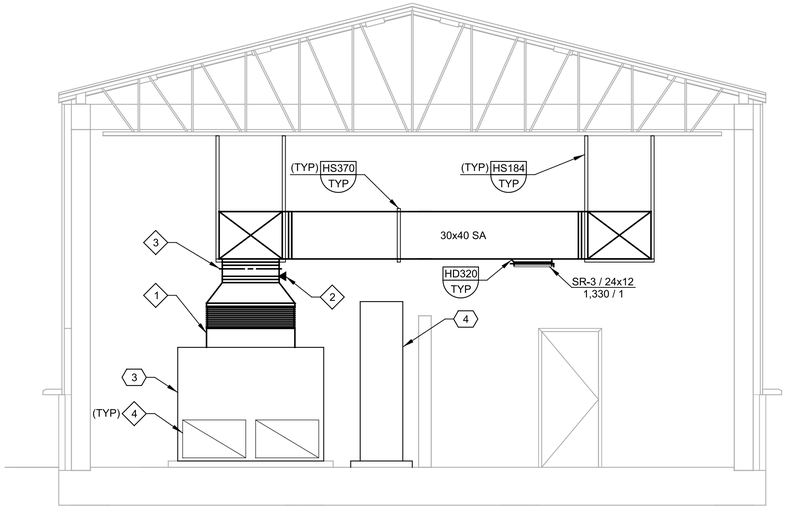

B SECTION
85H01
SCALE: 1/4" = 1'-0"
FILE: 10976A1085H301

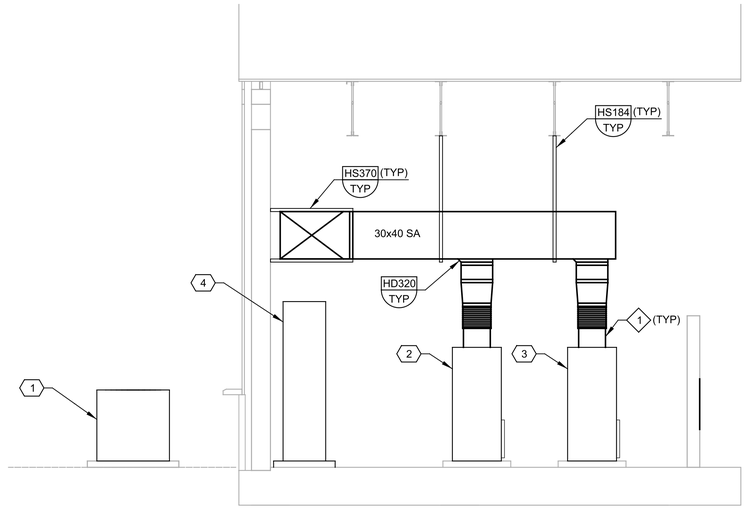

C SECTION
85H01
SCALE: 1/4" = 1'-0"
FILE: 10976A1085H302

THIS CONFORMED DOCUMENT IS RELEASED FOR THE CONVENIENCE OF THE CONTRACTOR UNDER THE AUTHORITY OF:

11-01-22
DANNY M HURTADO, P.E. DATE
TX LIC NO. 104266

SEE DISCLAIMER FOR LIMITATIONS OF USE.

CONTRACT DOCUMENTS DATED JUNE 10, 2022, AS PART OF THE BIDDING DOCUMENTS (DRAWINGS AND SPECIFICATIONS) AND SUBSEQUENTLY ISSUED ADDENDA HAVE BEEN MERGED INTO ONE CONFORMING SET OF DOCUMENTS FOR THE CONVENIENCE OF THE CONTRACTOR. IF INCONSISTENCIES OR AMBIGUITIES BETWEEN "CONFORMED" DOCUMENTS AND CONTRACT DOCUMENTS ARE FOUND, THE CONTRACT DOCUMENTS SHALL GOVERN.

REV	DATE	BY	DESCRIPTION
			CONFORMED DOCUMENTS

DESIGNED TPL
DRAWN KHB
CHECKED CAG
DATE NOVEMBER 2022

** ORIGINAL SEALED BY CHAD GREEN 06-10-22 TX PE 119980 **

carollo® TBPELS No. F-882

CITY OF AUSTIN FOUNDED 1839

CITY OF AUSTIN

CITY OF AUSTIN
WILD HORSE RANCH WWTP EXPANSION
HVAC
SUBSTATION NO. 1
SECTIONS

VERIFY SCALES
BAR IS ONE INCH ON ORIGINAL DRAWING
0 1"
IF NOT ONE INCH ON THIS SHEET, ADJUST SCALES ACCORDINGLY

JOB NO. 10976A.00
DRAWING NO. 85H02
SHEET NO. 453 OF 464

Plot Date: 11-OCT-2022 9:50:27 AM
User: LDietzel
PlotScale: 1:1
DesignScript: Carollo_Std_Pen_v0905.pen
ColorTable: gshade.ctb
Model: Layout1
LAST SAVED BY: JGiardini

X EQUIPMENT TAGS:

1	SUB1 HEAT PUMP NO. 1	SUB1-HVAC-01
2	SUB1 AIR HANDLING UNIT NO. 1	SUB1-HVAC-02
3	SUB1 HEAT PUMP NO. 2	SUB1-HVAC-03
4	SUB1 AIR HANDLING UNIT NO. 2	SUB1-HVAC-04
5	SUB1 POSITIVE PRESSURIZATION UNIT NO.1	SUB1-HVAC-05
6	SUB1 POSITIVE PRESSURIZATION UNIT NO. 2	SUB1-HVAC-06

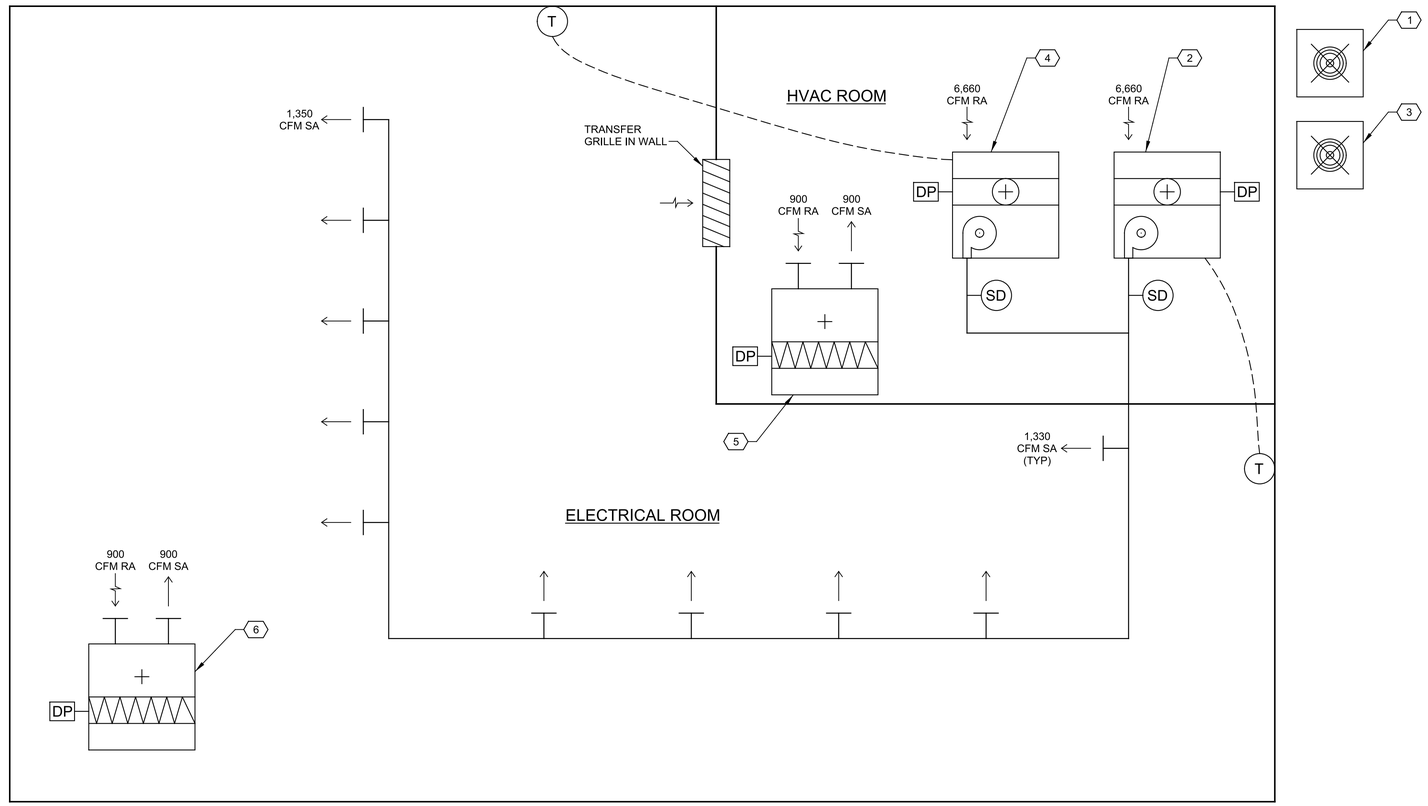

THIS CONFORMED DOCUMENT IS RELEASED FOR THE CONVENIENCE OF THE CONTRACTOR UNDER THE AUTHORITY OF:

DANNY M HURTADO, P.E.
TX LIC NO. 104266

11-01-22
DATE

SEE DISCLAIMER FOR LIMITATIONS OF USE.

CONTRACT DOCUMENTS DATED JUNE 10, 2022, AS PART OF THE BIDDING DOCUMENTS (DRAWINGS AND SPECIFICATIONS) AND SUBSEQUENTLY ISSUED ADDENDA HAVE BEEN MERGED INTO ONE CONFORMING SET OF DOCUMENTS FOR THE CONVENIENCE OF THE CONTRACTOR. IF INCONSISTENCIES OR AMBIGUITIES BETWEEN "CONFORMED" DOCUMENTS AND CONTRACT DOCUMENTS ARE FOUND, THE CONTRACT DOCUMENTS SHALL GOVERN.

REV	DATE	BY	DESCRIPTION
			CONFORMED DOCUMENTS

DESIGNED TPL
DRAWN JRG
CHECKED CAG
DATE NOVEMBER 2022

** ORIGINAL SEALED BY CHAD GREEN 06-10-22 TX PE 119980 **

carollo®
TBPELS No. F-882

CITY OF AUSTIN
FOUNDED 1839

CITY OF AUSTIN

CITY OF AUSTIN
WILD HORSE RANCH WWTP EXPANSION
HVAC
SUBSTATION NO. 1
AIRFLOW SCHEMATIC

VERIFY SCALES
BAR IS ONE INCH ON ORIGINAL DRAWING
0 1"
IF NOT ONE INCH ON THIS SHEET, ADJUST SCALES ACCORDINGLY

JOB NO. 10976A.00
DRAWING NO. 85H03
SHEET NO. 454 OF 464

PROJECT NO. 10976A10 FILE NAME: 10976A1085H003.dgn

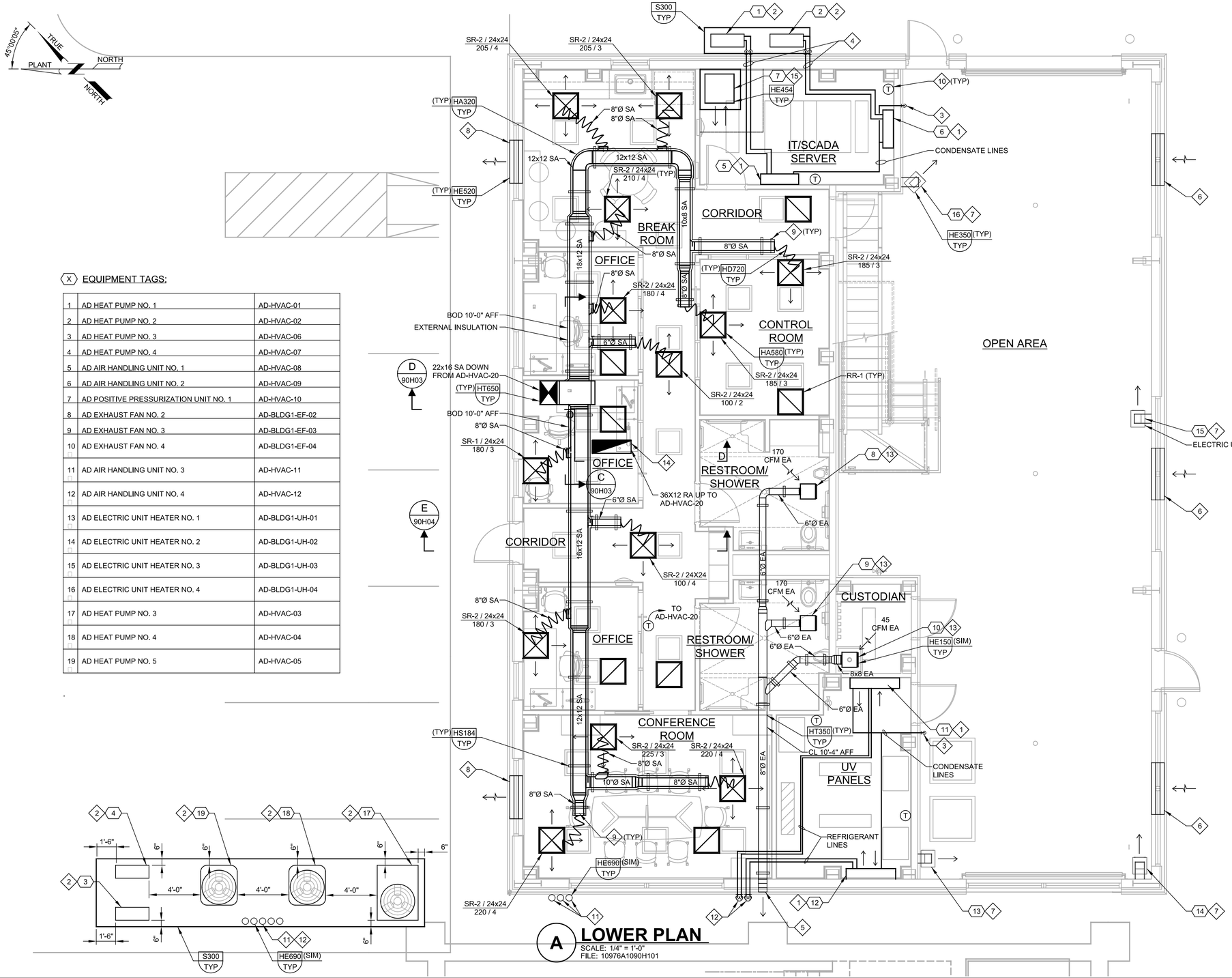

EQUIPMENT TAGS:

X		
1	AD HEAT PUMP NO. 1	AD-HVAC-01
2	AD HEAT PUMP NO. 2	AD-HVAC-02
3	AD HEAT PUMP NO. 3	AD-HVAC-06
4	AD HEAT PUMP NO. 4	AD-HVAC-07
5	AD AIR HANDLING UNIT NO. 1	AD-HVAC-08
6	AD AIR HANDLING UNIT NO. 2	AD-HVAC-09
7	AD POSITIVE PRESSURIZATION UNIT NO. 1	AD-HVAC-10
8	AD EXHAUST FAN NO. 2	AD-BLDG1-EF-02
9	AD EXHAUST FAN NO. 3	AD-BLDG1-EF-03
10	AD EXHAUST FAN NO. 4	AD-BLDG1-EF-04
11	AD AIR HANDLING UNIT NO. 3	AD-HVAC-11
12	AD AIR HANDLING UNIT NO. 4	AD-HVAC-12
13	AD ELECTRIC UNIT HEATER NO. 1	AD-BLDG1-UH-01
14	AD ELECTRIC UNIT HEATER NO. 2	AD-BLDG1-UH-02
15	AD ELECTRIC UNIT HEATER NO. 3	AD-BLDG1-UH-03
16	AD ELECTRIC UNIT HEATER NO. 4	AD-BLDG1-UH-04
17	AD HEAT PUMP NO. 3	AD-HVAC-03
18	AD HEAT PUMP NO. 4	AD-HVAC-04
19	AD HEAT PUMP NO. 5	AD-HVAC-05

GENERAL NOTES:

1. ALL DUCTWORK SHALL BE ALUMINUM.
2. MOUNT THERMOSTATS AT 48" ABOVE FINISHED FLOOR AND LABEL WITH ITS CORRESPONDING DEVICE.
3. DUCT SUPPORTS SHOWN FOR REFERENCE ONLY. REFER TO SPECIFICATION SECTION 15812, SMACNA AND TYPICAL DETAILS FOR ADDITIONAL REQUIREMENTS.
4. ALL DUCT IN CEILING PLENUM SHALL HAVE EXTERNAL INSULATION PER CONTRACT DOCUMENTS.
5. PROVIDE ALL ELBOWS WITH TURNING VANES PER TYPICAL DETAIL HA320/TYP.

KEY NOTES:

1 WALL MOUNTED MINI-SPLIT AIR HANDLING UNIT. MOUNT BOTTOM OF UNIT AT 8'-0" ABOVE FINISHED FLOOR.

2 OUTDOOR HEAT PUMPS UNITS. PROVIDE EQUIPMENT PAD PER DETAIL S300/TYP.

3 1" SCHEDULE 40 PVC CONDENSATE DRAIN LINE PER TYPICAL DETAIL HE620. DRAIN LINE ROUTES DOWN WALL AND TERMINATES AT OED DRAIN. REFER TO PLUMBING (P) DRAWINGS FOR OED DRAIN LOCATION. PROVIDE 1 INCH AIR GAP.

4 REFRIGERANT LINES ROUTED TO HEAT PUMP UNITS. LINES TRAVEL EXIT BUILDING AND DOWN EXTERIOR WALL. INSULATE PER CONTRACT DOCUMENTS.

5 12X16 WEATHER LOUVER (L-1) IN CEILING PLENUM. PROVIDE BACKDRAFT DAMPER (BDD-3). MOUNT BOTTOM OF LOUVER AT 10'-0" AFF.

6 48X22 STATIONARY WALL INTAKE LOUVER (L-1). CENTER LOUVER ABOVE WINDOWS. BOTTOM OF LOUVER AT 8'-0" AFF. PROVIDE BACKDRAFT DAMPER (BDD-3). MOUNTED TO INTERIOR OF LOUVER. REFER TO SECTION 10910 FOR ADDITIONAL DETAILS.

7 ELECTRIC UNIT HEATER. MOUNT ELECTRIC UNIT HEATER AT 8'-0" AFF.

8 40X20 RELIEF LOUVER (L-1) IN CEILING PLENUM. MOUNT BOTTOM OF LOUVER AT 10'-0." CENTER LOUVER ABOVE WINDOW. PROVIDE BACKDRAFT DAMPER (BDD-3).

9 BALANCING DAMPER (BD-2).

10 MANUFACTURER WIRED PROGRAMMABLE THERMOSTAT.

11 ROUTE REFRIGERANT LINES FROM AIR HANDLING UNITS ON THE SECOND FLOOR DOWN EXTERIOR WALL TO SLEEVES. REFRIGERANT LINES SHALL ROUTE UNDERGROUND PER THE TYPICAL DETAIL AND CONNECT TO THEIR RESPECTIVE HEAT PUMPS.

12 ROUTE REFRIGERANT LINES FROM WALL MOUNTED MINI-SPLIT AIR HANDLING UNITS TO SLEEVES. REFRIGERANT LINES SHALL ROUTE UNDERGROUND PER THE TYPICAL DETAIL AND CONNECT TO THEIR RESPECTIVE HEAT PUMPS.

13 CEILING MOUNTED EXHAUST FANS. MOUNT FANS SUCH THAT DUCT CENTERLINE WILL BE 10'-4" AFF. FANS SHALL BE INTERLOCKED WITH LIGHT SWITCH WITHIN ROOM.

14 DUCT LOCATION TO BE COORDINATED IN THE FIELD TO ENSURE THERE WILL NOT BE INTERFERENCE WITH STRUCTURAL ELEMENTS.

15 POSITIVE PRESSURE UNIT. PROVIDE EQUIPMENT PAD PER DETAIL S302./TYP.

A LOWER PLAN

SCALE: 1/4" = 1'-0"
FILE: 10976A1090H101

THIS CONFORMED DOCUMENT IS RELEASED FOR THE CONVENIENCE OF THE CONTRACTOR UNDER THE AUTHORITY OF:

11-01-22

DANNY M HURTADO, P.E. DATE
TX LIC NO. 104266

SEE DISCLAIMER FOR LIMITATIONS OF USE.

CONTRACT DOCUMENTS DATED JUNE 10, 2022, AS PART OF THE BIDDING DOCUMENTS (DRAWINGS AND SPECIFICATIONS) AND SUBSEQUENTLY ISSUED ADDENDA HAVE BEEN MERGED INTO ONE CONFORMING SET OF DOCUMENTS FOR THE CONVENIENCE OF THE CONTRACTOR. IF INCONSISTENCIES OR AMBIGUITIES BETWEEN "CONFORMED" DOCUMENTS AND CONTRACT DOCUMENTS ARE FOUND, THE CONTRACT DOCUMENTS SHALL GOVERN.

REV	DATE	BY	DESCRIPTION
			CONFORMED DOCUMENTS

DESIGNED TPL
DRAWN KHB
CHECKED CAG
DATE NOVEMBER 2022

** ORIGINAL SEALED BY CHAD GREEN 06-10-22 TX PE 119980 **

carollo® TBPELS No. F-882

CITY OF AUSTIN — FOUNDED 1839

CITY OF AUSTIN

CITY OF AUSTIN
WILD HORSE RANCH WWTP EXPANSION
HVAC
ADMINISTRATION BUILDING
LOWER PLAN

VERIFY SCALES
BAR IS ONE INCH ON ORIGINAL DRAWING
0 1"
IF NOT ONE INCH ON THIS SHEET, ADJUST SCALES ACCORDINGLY

JOB NO. 10976A.00
DRAWING NO. 90H01
SHEET NO. 455 OF 464

PROJECT NO. 10976A10 FILE NAME: 10976A1090H001.dgn

LAST SAVED BY: JGiardini PlotScale: 1:1 DesignScript: Carollo_Std_Pen_v0905.pen ColorTable: gshade.ctb Model: Layout1 User: LDietzel Plot Date: 11-OCT-2022 9:52:14 AM

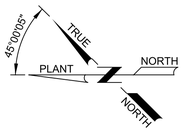

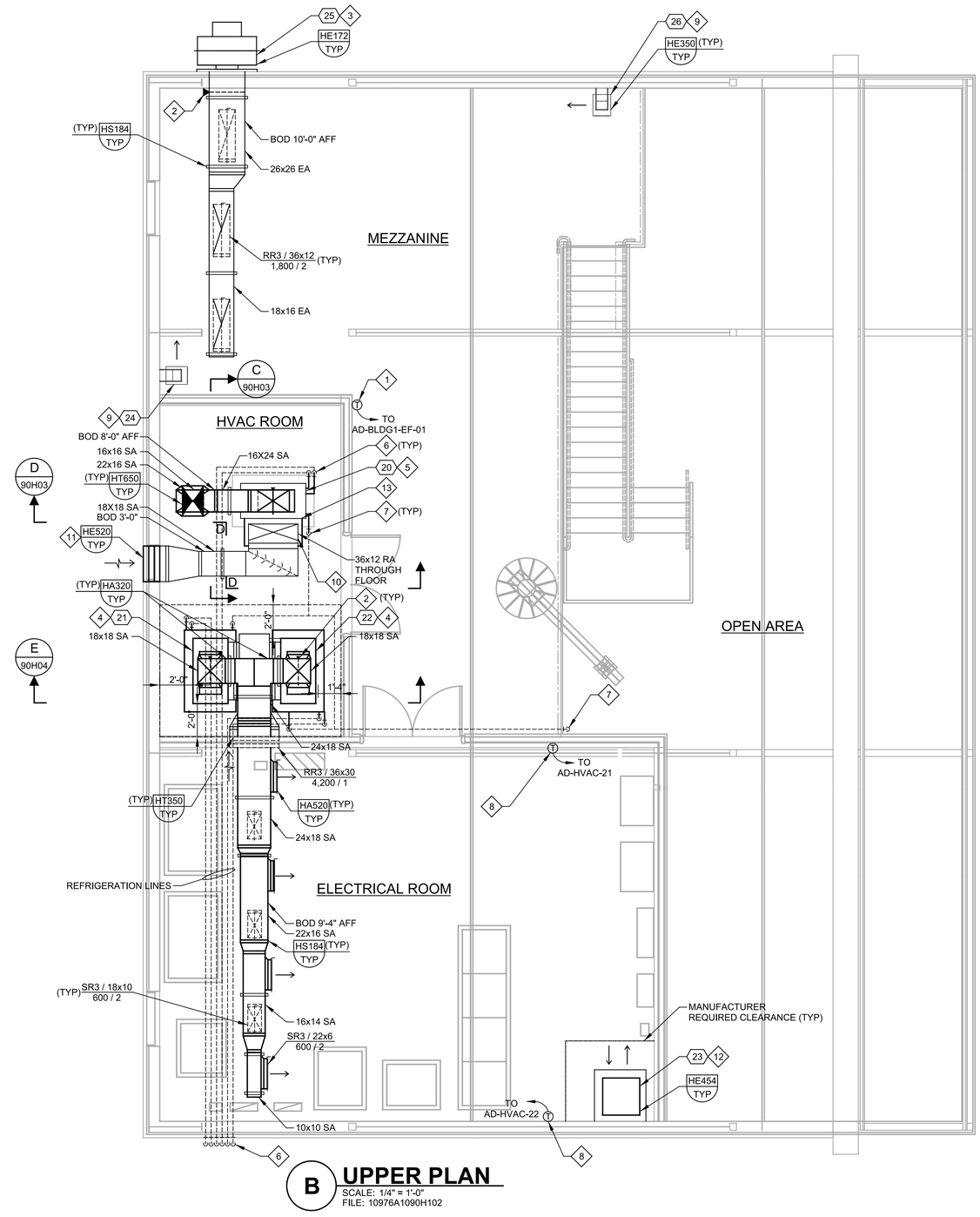

B UPPER PLAN

SCALE: 1/4" = 1'-0"
FILE: 10976A1090H102

GENERAL NOTES:

1. ALL DUCTWORK SHALL BE ALUMINUM.
2. MOUNT THERMOSTATS AT 48" ABOVE FINISHED FLOOR AND LABEL WITH ITS CORRESPONDING DEVICE.
3. DUCT SUPPORTS SHOWN FOR REFERENCE ONLY. REFER TO SPECIFICATION SECTION 15812, SMACNA AND TYPICAL DETAILS FOR ADDITIONAL REQUIREMENTS.
4. ALL DUCT IN CEILING PLENUM SHALL HAVE EXTERNAL INSULATION PER CONTRACT DOCUMENTS.
5. PROVIDE ALL ELBOWS WITH TURNING VANES PER TYPICAL DETAIL HA320/TYP.

KEY NOTES:

1 THERMOSTAT (TYPE T-2).

2 DUCT MOUNTED SMOKE DETECTOR. PROVIDE ACCESS DOOR NEAR SMOKE DETECTOR.

3 WALL MOUNTED EXHAUST FAN. EXHAUST FAN TO BE MOUNTED WITH CENTERLINE AT 11'-1" ABOVE FINISHED FLOOR.

4 AIR HANDLING UNITS MOUNTED ON EQUIPMENT PADS PER DETAIL S302/TYP. SA DUCT FROM EACH UNIT TO COMBINE INTO SINGLE SA DUCT AND PENETRATES WALL INTO ELECTRICAL ROOM.

5 AIR HANDLING UNIT MOUNTED ON EQUIPMENT PAD PER DETAIL S302/TYP.

6 ROUTE REFRIGERANT LINES FROM AIR HANDLING UNITS THROUGH THE FLOOR INTO THE CEILING PLENUM AND TO THE WEST WALL. REFRIGERANT LINES SHALL RUN DOWN THE EXTERIOR WALL AND THEN UNDERGROUND SIMILAR TO DETAIL HE690 AND CONNECT TO THEIR RESPECTIVE HEAT PUMPS. SEE 90H01 FOR CONTINUATION.

7 1" SCHEDULE 40 PVC CONDENSATE DRAIN LINE FROM EACH AHU PER DETAIL HE620/TYP PENETRATE FLOOR AND RUN IN PLENUM AS SHOWN. DRAIN LINES COMBINE INTO 1.5" SCHEDULE 40 PVC AND ROUTE THROUGH WALL INTO OPEN AREA. DRAIN LINE ROUTES DOWN WALL AND TERMINATES AT OED DRAIN. REFER TO PLUMBING (P) DRAWINGS FOR OED DRAIN LOCATION. PROVIDE 1 INCH AIR GAP.

8 MANUFACTURER WIRED PROGRAMMABLE THERMOSTAT.

9 ELECTRIC UNIT HEATER. MOUNT ELECTRIC UNIT HEATER AT 8'-0" AFF.

10 36X12 RA DUCT THROUGH FLOOR PER DETAIL HT650/TYP. DUCT PENETRATION LOCATION TO BE FIELD VERIFIED TO ENSURE THERE WILL NOT BE INTERFERENCE WITH STRUCTURAL ELEMENTS OR OTHER DISCIPLINES.

11 26X40 STATIONARY WEATHER LOUVER (L-1) MOUNTED WITH BOTTOM OF LOUVER 3'-0" AFF. PROVIDE BACKDRAFT DAMPER (BDD-3).

12 POSITIVE PRESSURE UNIT. PROVIDE EQUIPMENT PAD PER DETAIL S302/TYP.

13 ECONOMIZER MIXING BOX.

(X) EQUIPMENT TAGS:

20	AD AIR HANDLING UNIT NO. 5	AD-HVAC-13
21	AD AIR HANDLING UNIT NO. 6	AD-HVAC-14
22	AD AIR HANDLING UNIT NO. 7	AD-HVAC-15
23	AD POSITIVE PRESSURIZATION UNIT NO. 2	AD-HVAC-16
24	AD ELECTRIC UNIT HEATER NO. 5	AD-BLDG1-UH-05
25	AD EXHAUST FAN NO. 1	AD-BLDG1-EF-01
26	AD ELECTRIC UNIT HEATER NO. 6	AD-BLDG1-UH-06

THIS CONFORMED DOCUMENT IS RELEASED FOR THE CONVENIENCE OF THE CONTRACTOR UNDER THE AUTHORITY OF:

DANNY M HURTADO, P.E.
TX LIC NO. 104266

11-01-22
DATE

SEE DISCLAIMER FOR LIMITATIONS OF USE.

CONTRACT DOCUMENTS DATED JUNE 10, 2022, AS PART OF THE BIDDING DOCUMENTS (DRAWINGS AND SPECIFICATIONS) AND SUBSEQUENTLY ISSUED ADDENDA HAVE BEEN MERGED INTO ONE CONFORMING SET OF DOCUMENTS FOR THE CONVENIENCE OF THE CONTRACTOR. IF INCONSISTENCIES OR AMBIGUITIES BETWEEN "CONFORMED" DOCUMENTS AND CONTRACT DOCUMENTS ARE FOUND, THE CONTRACT DOCUMENTS SHALL GOVERN.

REV	DATE	BY	DESCRIPTION
			CONFORMED DOCUMENTS

DESIGNED TPL
DRAWN KHB
CHECKED CAG
DATE NOVEMBER 2022

** ORIGINAL SEALED BY CHAD GREEN 06-10-22 TX PE 119980 **

carollo
TBPELS No. F-882

CITY OF AUSTIN
FOUNDED 1839
CITY OF AUSTIN

CITY OF AUSTIN
WILD HORSE RANCH WWTP EXPANSION
HVAC
ADMINISTRATION BUILDING
UPPER PLAN

VERIFY SCALES
BAR IS ONE INCH ON ORIGINAL DRAWING
0 1"
IF NOT ONE INCH ON THIS SHEET, ADJUST SCALES ACCORDINGLY

JOB NO. 10976A.00
DRAWING NO. 90H02
SHEET NO. 456 OF 464

PROJECT NO. 10976A10 FILE NAME: 10976A1090H002.dgn

LAST SAVED BY: JGiardini PlotScale: 1:1 DesignScript: Carollo_Std_Pen_v0905.pen ColorTable: gshade.ctb Model: Layout1 User: LDietzel Plot Date: 11-OCT-2022 9:53:47 AM

Plot Date: 11-OCT-2022 9:55:20 AM
User: LDietzel
PlotScale: 1:1
DesignScript: Carollo_Std_Pen_v0905.pen
ColorTable: gshade.ctb
Model: Layout1
LAST SAVED BY: JGiardini

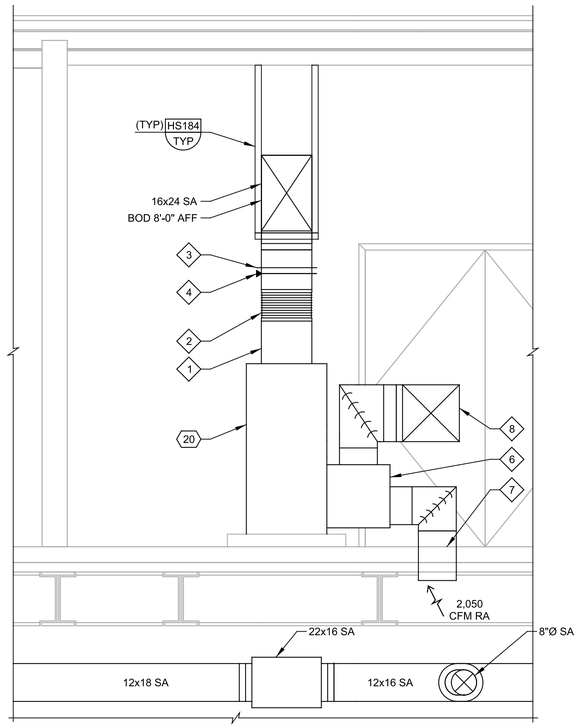

C **SECTION**
90H02
SCALE: 1/2" = 1'-0"
FILE: 10976A1090H301

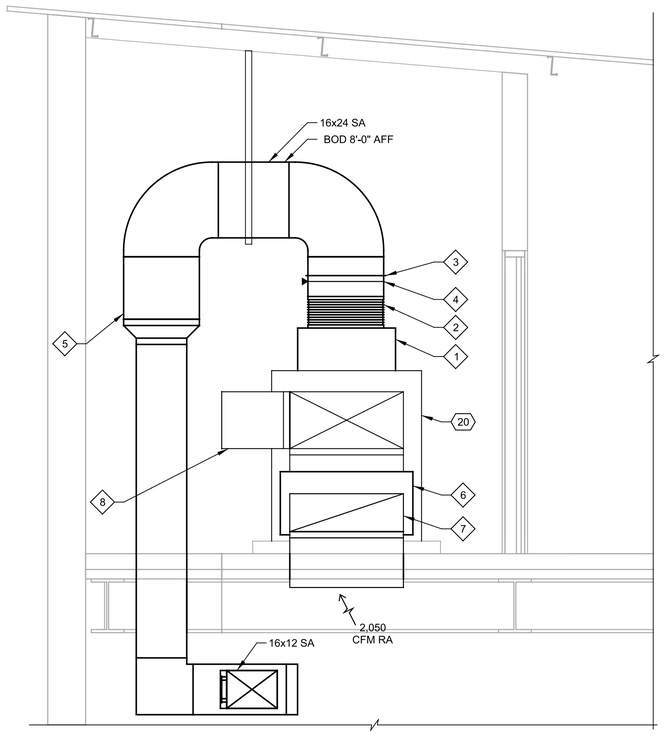

D **SECTION**
90H02
SCALE: 1/2" = 1'-0"
FILE: 10976A1090H302

GENERAL NOTES:

1. ALL DUCTWORK SHALL BE ALUMINUM.
2. MOUNT THERMOSTATS AT 48" ABOVE FINISHED FLOOR AND LABEL WITH ITS CORRESPONDING DEVICE.
3. DUCT SUPPORTS SHOWN FOR REFERENCE ONLY. REFER TO SPECIFICATION SECTION 15812, SMACNA AND TYPICAL DETAILS FOR ADDITIONAL REQUIREMENTS.
4. ALL DUCT IN CEILING PLENUM SHALL HAVE EXTERNAL INSULATION PER CONTRACT DOCUMENTS.
5. PROVIDE ALL ELBOWS WITH TURNING VANES PER TYPICAL DETAIL HA320/TYP.

◇ KEY NOTES:

1 AUXILIARY HEATER TO BE INSTALLED ON SUPPLY.

2 16X24 SA DUCT CONNECTS TO AUXILIARY HEATER. PROVIDE FLEXIBLE CONNECTION (FL-1).

3 BACKDRAFT DAMPER (BDD-3).

4 DUCT MOUNTED SMOKE DETECTOR. PROVIDE ACCESS DOOR NEAR SMOKE DETECTOR.

5 16X24 SA DUCT TRANSITIONS TO 22X16 SA AND PENETRATES FLOOR INTO CEILING PLENUM. DUCT PENETRATION LOCATION TO BE FIELD VERIFIED TO ENSURE THERE WILL NOT BE INTERFERENCE WITH STRUCTURAL ELEMENTS OR OTHER DISCIPLINES.

6 ECONOMIZER MIXING BOX.

7 36X12 RA FROM MIXING BOX PENETRATES FLOOR TO RETURN AIR FROM CEILING PLENUM. DUCT PENETRATION LOCATION TO BE FIELD VERIFIED TO ENSURE THERE WILL NOT BE INTERFERENCE WITH STRUCTURAL ELEMENTS OR OTHER DISCIPLINES.

8 18X18 OA DUCT WITH BOD AT 3'-0" AFF. DUCT ROUTES TO WALL AND TERMINATES WITH 26x40 STATIONARY WEATHER LOUVER (L-1) MOUNTED WITH BOTTOM OF LOUVER AT 3'-0" AFF.

⊗ EQUIPMENT TAGS:

20	AD AIR HANDLING UNIT NO. 5	AD-HVAC-13

THIS CONFORMED DOCUMENT IS RELEASED FOR THE CONVENIENCE OF THE CONTRACTOR UNDER THE AUTHORITY OF:

DANNY M HURTADO, P.E.
TX LIC NO. 104266

11-01-22
DATE

SEE DISCLAIMER FOR LIMITATIONS OF USE.

CONTRACT DOCUMENTS DATED JUNE 10, 2022, AS PART OF THE BIDDING DOCUMENTS (DRAWINGS AND SPECIFICATIONS) AND SUBSEQUENTLY ISSUED ADDENDA HAVE BEEN MERGED INTO ONE CONFORMING SET OF DOCUMENTS FOR THE CONVENIENCE OF THE CONTRACTOR. IF INCONSISTENCIES OR AMBIGUITIES BETWEEN "CONFORMED" DOCUMENTS AND CONTRACT DOCUMENTS ARE FOUND, THE CONTRACT DOCUMENTS SHALL GOVERN.

REV	DATE	BY	DESCRIPTION
			CONFORMED DOCUMENTS

DESIGNED TPL
DRAWN KHB
CHECKED CAG
DATE NOVEMBER 2022

** ORIGINAL SEALED BY CHAD GREEN 06-10-22 TX PE 119980 **

carollo®
TBPELS No. F-882

CITY OF AUSTIN
FOUNDED 1839

CITY OF AUSTIN

CITY OF AUSTIN
WILD HORSE RANCH WWTP EXPANSION
HVAC
ADMINISTRATION BUILDING
SECTIONS 1

VERIFY SCALES
BAR IS ONE INCH ON ORIGINAL DRAWING
0 1"
IF NOT ONE INCH ON THIS SHEET, ADJUST SCALES ACCORDINGLY

JOB NO. 10976A.00
DRAWING NO. 90H03
SHEET NO. 457 OF 464

PROJECT NO. 10976A10 FILE NAME: 10976A1090H003.dgn

Plot Date: 11-OCT-2022 9:56:52 AM
User: LDietzel
PlotScale: 1:1
DesignScript: Carollo_Std_Pen_v0905.pen
ColorTable: gshade.ctb
Model: Layout1
LAST SAVED BY: ataylor

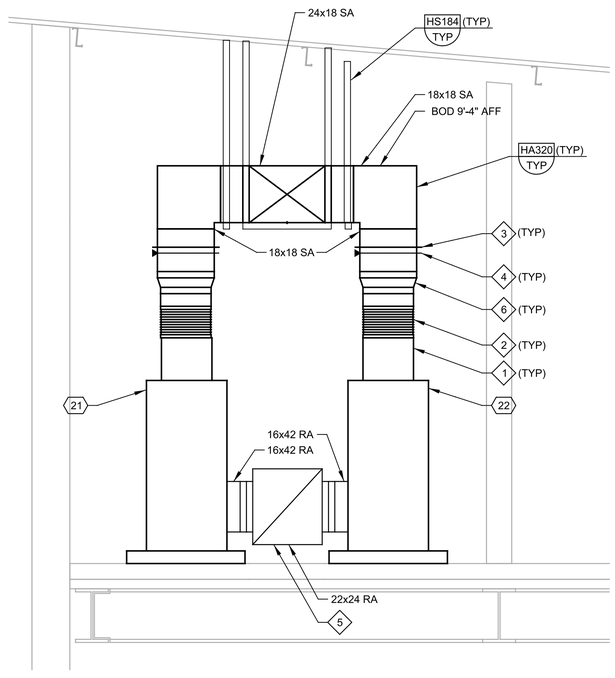

E 90H02 **SECTION**
SCALE: 1/2" = 1'-0"
FILE: 10976A1090H303

GENERAL NOTES:

1. ALL DUCTWORK SHALL BE ALUMINUM.
2. MOUNT THERMOSTATS AT 48" ABOVE FINISHED FLOOR AND LABEL WITH ITS CORRESPONDING DEVICE.
3. DUCT SUPPORTS SHOWN FOR REFERENCE ONLY. REFER TO SPECIFICATION SECTION 15812, SMACNA AND TYPICAL DETAILS FOR ADDITIONAL REQUIREMENTS.
4. ALL DUCT IN CEILING PLENUM SHALL HAVE EXTERNAL INSULATION PER CONTRACT DOCUMENTS.
5. PROVIDE ALL ELBOWS WITH TURNING VANES PER TYPICAL DETAIL HA320/TYP.

KEY NOTES:

1 AUXILIARY HEATER TO BE INSTALLED ON SUPPLY.

2 24X16 SA DUCT CONNECTS TO AUXILIARY HEATER. PROVIDE FLEXIBLE CONNECTION (FL-1).

3 BACKDRAFT DAMPER (BDD-3).

4 DUCT MOUNTED SMOKE DETECTOR. PROVIDE ACCESS DOOR NEAR SMOKE DETECTOR.

5 22X24 RA DUCT ROUTES TO WEST WALL AND TERMINATES AT WALL WITH 36X30 RETURN REGISTER (RR-3).

6 24X16 SA DUCT TRANSITIONS TO 18X18 SA.

X EQUIPMENT TAGS:

21	AD AIR HANDLING UNIT NO. 6	AD-HVAC-14
22	AD AIR HANDLING UNIT NO. 7	AD-HVAC-15

THIS CONFORMED DOCUMENT IS RELEASED FOR THE CONVENIENCE OF THE CONTRACTOR UNDER THE AUTHORITY OF:

11-01-22
DANNY M HURTADO, P.E. DATE
TX LIC NO. 104266

SEE DISCLAIMER FOR LIMITATIONS OF USE.

CONTRACT DOCUMENTS DATED JUNE 10, 2022, AS PART OF THE BIDDING DOCUMENTS (DRAWINGS AND SPECIFICATIONS) AND SUBSEQUENTLY ISSUED ADDENDA HAVE BEEN MERGED INTO ONE CONFORMING SET OF DOCUMENTS FOR THE CONVENIENCE OF THE CONTRACTOR. IF INCONSISTENCIES OR AMBIGUITIES BETWEEN "CONFORMED" DOCUMENTS AND CONTRACT DOCUMENTS ARE FOUND, THE CONTRACT DOCUMENTS SHALL GOVERN.

REV	DATE	BY	DESCRIPTION
			CONFORMED DOCUMENTS

DESIGNED TPL
DRAWN KHB
CHECKED CAG
DATE NOVEMBER 2022

** ORIGINAL SEALED BY CHAD GREEN 06-10-22 TX PE 119980 **

carollo®
TBPELS No. F-882

CITY OF AUSTIN
FOUNDED 1839

CITY OF AUSTIN

CITY OF AUSTIN
WILD HORSE RANCH WWTP EXPANSION
HVAC
ADMINISTRATION BUILDING
SECTIONS 2

VERIFY SCALES
BAR IS ONE INCH ON ORIGINAL DRAWING
0 1"
IF NOT ONE INCH ON THIS SHEET, ADJUST SCALES ACCORDINGLY

JOB NO. 10976A.00
DRAWING NO. 90H04
SHEET NO. 458 OF 464

PROJECT NO. 10976A10 FILE NAME: 10976A1090H004.dgn

THIS CONFORMED DOCUMENT IS RELEASED FOR THE CONVENIENCE OF THE CONTRACTOR UNDER THE AUTHORITY OF:

DANNY M HURTADO, P.E.
TX LIC NO. 104266

11-01-22
DATE

SEE DISCLAIMER FOR LIMITATIONS OF USE.

CONTRACT DOCUMENTS DATED JUNE 10, 2022, AS PART OF THE BIDDING DOCUMENTS (DRAWINGS AND SPECIFICATIONS) AND SUBSEQUENTLY ISSUED ADDENDA HAVE BEEN MERGED INTO ONE CONFORMING SET OF DOCUMENTS FOR THE CONVENIENCE OF THE CONTRACTOR. IF INCONSISTENCIES OR AMBIGUITIES BETWEEN "CONFORMED" DOCUMENTS AND CONTRACT DOCUMENTS ARE FOUND, THE CONTRACT DOCUMENTS SHALL GOVERN.

(#) EQUIPMENT TAGS:

1	AD HEAT PUMP NO. 3	AD-HVAC-03
2	AD HEAT PUMP NO. 4	AD-HVAC-04
3	AD HEAT PUMP NO. 5	AD-HVAC-05
4	AD AIR HANDLING UNIT NO. 5	AD-HVAC-13
5	AD AIR HANDLING UNIT NO. 6	AD-HVAC-14
6	AD AIR HANDLING UNIT NO. 7	AD-HVAC-15
7	AD POSITIVE PRESSURIZATION UNIT NO. 2	AD-HVAC-16
8	AD EXHAUST FAN NO. 2	AD-BLDG1-EF-02
9	AD EXHAUST FAN NO. 3	AD-BLDG1-EF-03
10	AD EXHAUST FAN NO. 4	AD-BLDG1-EF-04

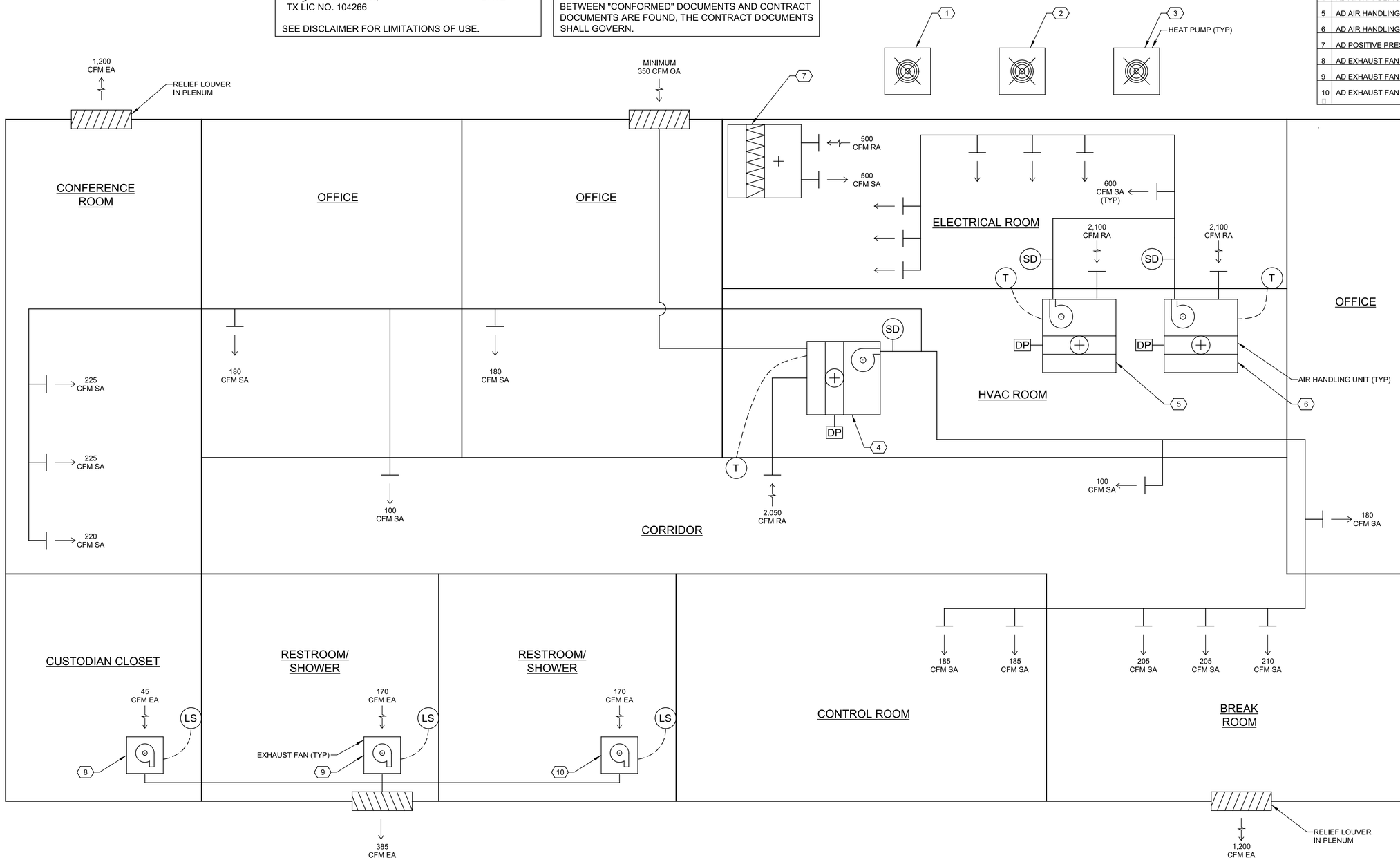

REV	DATE	BY	DESCRIPTION
			CONFORMED DOCUMENTS

DESIGNED TPL
DRAWN JRG
CHECKED CAG
DATE NOVEMBER 2022

** ORIGINAL SEALED BY CHAD GREEN 06-10-22 TX PE 119980 **

carollo®
TBPELS No. F-882

CITY OF AUSTIN

CITY OF AUSTIN
WILD HORSE RANCH WWTP EXPANSION
HVAC
ADMINISTRATION BUILDING AIRFLOW SCHEMATIC 1

VERIFY SCALES
BAR IS ONE INCH ON ORIGINAL DRAWING
0 1"
IF NOT ONE INCH ON THIS SHEET, ADJUST SCALES ACCORDINGLY

JOB NO. 10976A.00
DRAWING NO. 90H05
SHEET NO. 459 OF 464

PROJECT NO. 10976A10 FILE NAME: 10976A1090H005.dgn

Plot Date: 11-OCT-2022 9:58:37 AM
User: LDietzel
PlotScale: 1:1
DesignScript: Carollo_Std_Pen_v0905.pen
ColorTable: gshade.ctb
Model: Layout1
LAST SAVED BY: JGiardini

Plot Date: 11-OCT-2022 10:00:02 AM
User: LDietzel
PlotScale: 1:1
DesignScript: Carollo_Std_Pen_v0905.pen
ColorTable: gshade.ctb
Model: Layout1
LAST SAVED BY: JGiardini

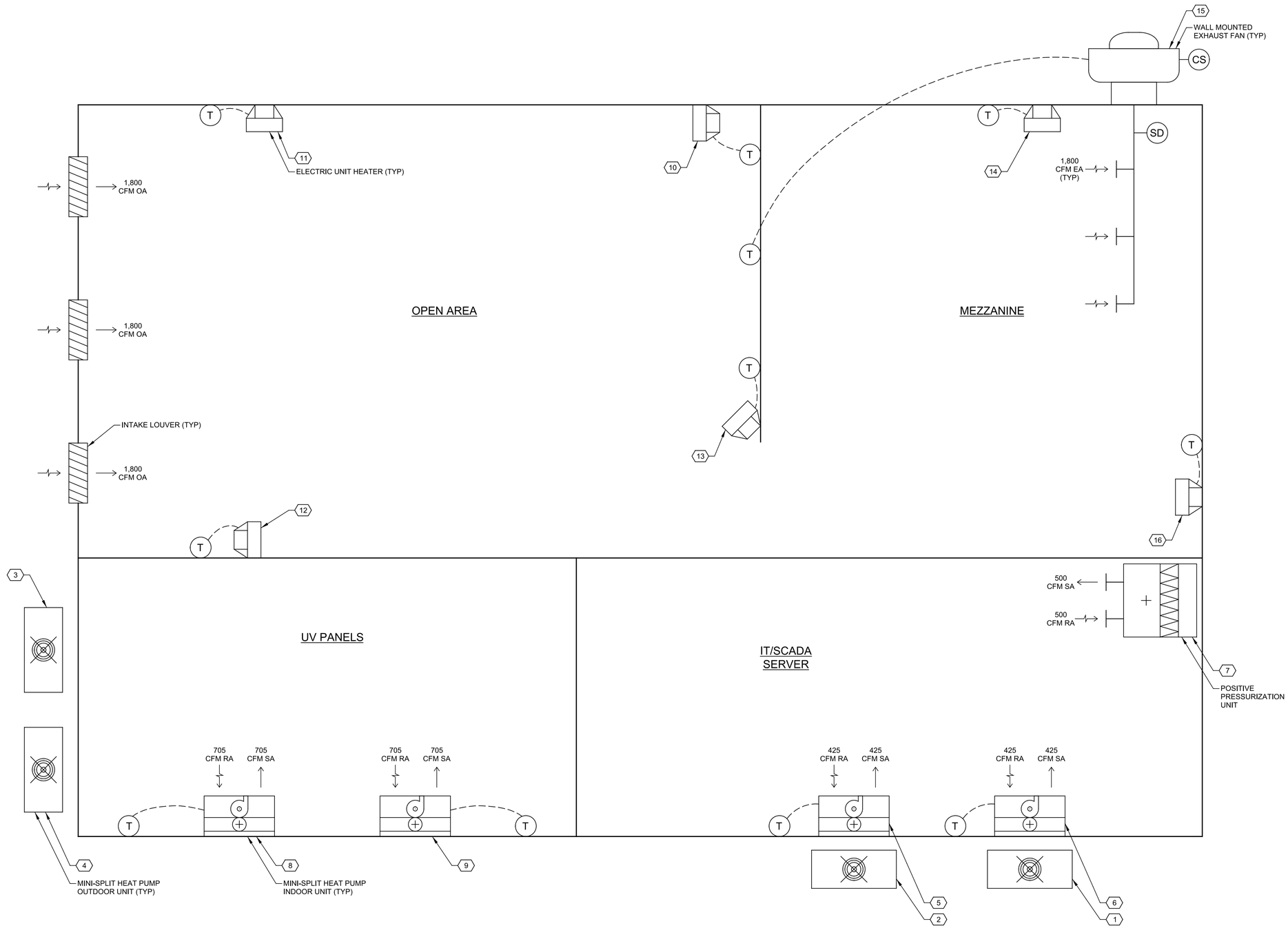

X EQUIPMENT TAGS:

1	ADMIN BLDG (AD) HEAT PUMP NO. 1	AD-HVAC-01
2	AD HEAT PUMP NO. 2	AD-HVAC-02
3	AD HEAT PUMP NO. 3	AD-HVAC-06
4	AD HEAT PUMP NO. 4	AD-HVAC-07
5	AD AIR HANDLING UNIT NO. 1	AD-HVAC-08
6	AD AIR HANDLING UNIT NO. 2	AD-HVAC-09
7	AD POSITIVE PRESSURIZATION UNIT NO. 1	AD-HVAC-10
8	AD AIR HANDLING UNIT NO. 3	AD-HVAC-11
9	AD AIR HANDLING UNIT NO. 4	AD-HVAC-12
10	AD ELECTRIC UNIT HEATER NO. 1	AD-BLDG1-UH-01
11	AD ELECTRIC UNIT HEATER NO. 2	AD-BLDG1-UH-02
12	AD ELECTRIC UNIT HEATER NO. 3	AD-BLDG1-UH-03
13	AD ELECTRIC UNIT HEATER NO. 4	AD-BLDG1-UH-04
14	AD ELECTRIC UNIT HEATER NO. 5	AD-BLDG1-UH-05
15	AD EXHAUST FAN NO. 1	AD-BLDG1-EF-01
16	AD ELECTRIC UNIT HEATER NO. 6	AD-BLDG1-UH-06

THIS CONFORMED DOCUMENT IS RELEASED FOR THE CONVENIENCE OF THE CONTRACTOR UNDER THE AUTHORITY OF:

DANNY M HURTADO, P.E.
TX LIC NO. 104266

11-01-22
DATE

SEE DISCLAIMER FOR LIMITATIONS OF USE.

CONTRACT DOCUMENTS DATED JUNE 10, 2022, AS PART OF THE BIDDING DOCUMENTS (DRAWINGS AND SPECIFICATIONS) AND SUBSEQUENTLY ISSUED ADDENDA HAVE BEEN MERGED INTO ONE CONFORMING SET OF DOCUMENTS FOR THE CONVENIENCE OF THE CONTRACTOR. IF INCONSISTENCIES OR AMBIGUITIES BETWEEN "CONFORMED" DOCUMENTS AND CONTRACT DOCUMENTS ARE FOUND, THE CONTRACT DOCUMENTS SHALL GOVERN.

REV	DATE	BY	DESCRIPTION
			CONFORMED DOCUMENTS

DESIGNED TPL
DRAWN JRG
CHECKED CAG
DATE NOVEMBER 2022

** ORIGINAL SEALED BY CHAD GREEN 06-10-22 TX PE 119980 **

carollo®
TBPELS No. F-882

CITY OF AUSTIN
FOUNDED 1839

CITY OF AUSTIN

CITY OF AUSTIN
WILD HORSE RANCH WWTP EXPANSION
HVAC
ADMINISTRATION BUILDING
AIRFLOW SCHEMATIC 2

VERIFY SCALES
BAR IS ONE INCH ON ORIGINAL DRAWING
0 1"
IF NOT ONE INCH ON THIS SHEET, ADJUST SCALES ACCORDINGLY

JOB NO. 10976A.00
DRAWING NO. 90H06
SHEET NO. 460 OF 464

PROJECT NO. 10976A10 FILE NAME: 10976A1090H006.dgn

GENERAL ABBREVIATIONS

A	@	AT
	AD	AREA DRAIN
	AFF	ABOVE FINISHED FLOOR
B	BFP	BACKFLOW PREVENTER
	BLDG	BUILDING
	BOP	BOTTOM OF PIPE
	BWV	BACKWATER VALVE
C	CL	CENTERLINE
	CA	COMPRESSED AIR
	CI	CAST IRON
	CO	CLEANOUT
	CONT	CONTINUOUS, CONTINUE
	CU FT	CUBIC FEET
	CV	CHECK VALVE
	CW	COLD WATER
D	D	DRAIN
	DCO	DOUBLE CLEANOUT
	DI	DUCTILE IRON
	DN	DOWN
	DWG	DRAWING
E	E	EMERGENCY WATER
	ECO	EXTERIOR CLEANOUT
	EL	ELEVATION
	ES	EMERGENCY SHOWER
	ESEW	EMERGENCY SHOWER / EYEWASH STATION
	ETP	ELECTRONIC TRAP PRIMER
	EWC	ELECTRIC WATER COOLER
	EWH	ELECTRIC WATER HEATER
	EWU	EYE WASH UNIT
F	FAS	FLOW ALARM SWITCH
	FCO	FLOOR CLEANOUT
	FD	FLOOR DRAIN
	FE	FIRE EXTINGUISHER
	FHV&C	FIRE HOSE VALVE AND CABINET
	FS	FLOW SWITCH
	FV	FIRE VALVE
	F/BS	FACE/BODY SPRAY
G	G	GAS
	GPM	GALLONS PER MINUTE
H	HB	HOSE BIBB
	HD	HUB DRAIN
	HEV	HOSE END VALVE
	HP	HANDICAPPED (ADA ACCESSIBLE)
	HW	HOT WATER
	HWR	HOT WATER RETURN
	HWS	HOT WATER SUPPLY
I	INV	INVERT
	IOS	INSTALLED BY OTHER SECTION
	IPS	IRON PIPE SIZE
K	KS	KITCHEN SINK
	KU	KITCHEN UNIT
L	LAB	LABORATORY
	LAV	LAVATORY
	LBV	LOCKABLE BALL VALVE
	LSV	LOCK SHIELD VALVE
M	MAX	MAXIMUM
	MIN	MINIMUM
	MR	MOP RECEPTOR
N	ND	NUMBER
	NPW	NON-POTABLE WATER
O	OED	OPEN END OR OPEN EQUIPMENT DRAIN
P	P	PROTECTED WATER
	PD	PUMP DISCHARGE
	PG	PRESSURE GAUGE
	PH	POST HYDRANT
	PHW	PROTECTED HOT WATER
	PRW	PRESSURE WATER
	PRH	HIGH PRESSURE
	PSI	POUNDS PER SQUARE INCH
	PSL	LOW PRESSURE
	P&T	PRESSURE & TEMPERATURE
	PVC	POLYVINYL CHLORIDE
	PW	POTABLE WATER
R	RD	ROOF DRAIN
	RM	ROOM
	RPBP	REDUCED PRESSURE BACKFLOW PREVENTER
S	S	SOIL
	SA	SHOCK ABSORBER
	SF	SQUARE FOOT
	SH	SHOWER
	SHT	SHEET
	SP	SPRINKLER
	SQ	SQUARE
	SS	SANITARY SEWER
	SK	SINK
	SSK	SAMPLE
T	T&P	TEMPERATURE & PRESSURE RELIEF
	TD	TANK DRAIN
	THK	THICK(NESS)
	TP	TRAP PRIMER
	TW	TEPID WATER
	TWH	TANKLESS WATER HEATER
	TYP	TYPICAL
U	UNO	UNLESS NOTED OTHERWISE
	UR	URINAL
V	V	VENT
	VAC	VACUUM
	VB	VACUUM BREAKER
	VE	VACUUM EXHAUST
	VTR	VENT THROUGH ROOF
W	W	WASTE
	W/	WITH
	WC	WATER CLOSET
	WCO	WALL CLEANOUT
	WF	WASH FOUNTAIN
	WH	WALL HYDRANT
	WHA	WATER HAMMER ARRESTOR
	WHS	WASH HOSE STATION
	WT	(SANITARY) WASTE
	W&T	WASTE & TRAP
	W&V	WASTE & VENT

SERVICE LINES

- NEW COLD WATER (POTABLE)
- EXISTING COLD WATER (POTABLE)
- NEW HOT WATER (POTABLE)
- EXISTING HOT WATER (POTABLE)
- NON-POTABLE WATER
- NEW SANITARY SEWER
- EXISTING SANITARY SEWER
- SOIL OR WATER (DRAINAGE)
- TEMPERED WATER (POTABLE)
- VENT

PIPING SYMBOLS

- CO — CLEANOUT
- FLOOR CLEANOUT
- WCO — WALL CLEANOUT
- YCO — DOUBLE YARD CLEANOUT
- FLOOR DRAIN
- HUB DRAIN
- HOSE BIBB OR WALL HYDRANT
- HOSE RACK
- WATER PROOF SLEEVE
- DN OR DROP
  "DN" DENOTES PIPE WHICH PENETRATE THE FLOOR BELOW.
  "DROP" DENOTES PIPES WHICH DO NOT.
- UP OR RISE
  "UP" DENOTES PIPE WHICH PENETRATE THE FLOOR ABOVE.
  "RISE" DENOTES PIPES WHICH DO NOT.

NOTE: THE TERMS "DN" "DROP" "UP" & "RISE" ARE USED TO INDICATE THE VERTICAL DIRECTION IN WHICH A PIPE LINE CONTINUES FROM THE IMAGINARY PLANE OF VIEW. THE TERMS HAVE NO RELEVANCE TO THE DIRECTION OF FLOW WITHIN THE PIPE LINE.

- P-TRAP
- TEE
- TEE UP
- TEE DOWN
- LOCKABLE BALL VALVE
- CHECK VALVE
- GATE VALVE
- COLD BYPASS VALVE
- OR — BALL VALVE
- GLOBE VALVE
- BUTTERFLY VALVE
- PLUG VALVE
- FLOW CONTROL
- PRESSURE REGULATOR VALVE
- UNION
- BOTTOM CONNECTION
- TOP CONNECTION
- REDUCED PRESSURE BACKFLOW PREVENTER
- TEMPERATURE GAUGE
- RE-CIRCULATION PUMP

NOTE: THIS IS A GENERAL LIST OF SYMBOLS AND ABBREVIATIONS. NOT ALL ITEMS SHOWN HERE APPEAR ON THE CONTRACT DRAWINGS.

PLUMBING ROUGH IN SCHEDULE

TAG NO.	PW (IN.)	HW (IN.)	D/SS (IN.)	VENT (IN.)	FIXTURE DESCRIPTION
WC	1-1/4"	N/A	4"	2"	WATER CLOSET (ADA ACCESSIBLE)
SH	1/2"	1/2"	2"	2"	SHOWER (ADA ACCESSIBLE)
LAV	1/2"	1/2"	1-1/4"	1-1/2"	LAVATORY (ADA ACCESSIBLE)
MR	1/2"	1/2"	2"	2"	MOP RECEPTOR
KS	1/2"	1/2"	1-1/2"	1-1/2"	KITCHEN SINK
TWH	1-1/4"	N/A	N/A	N/A	TANKLESS WATER HEATER (HB&ESEW)
WH	1-1/2"	N/A	3/4"	PER MFR	TANKED WATER HEATER (GAS)

WATER HAMMER ARRESTOR SCHEDULE

SMITH MODEL *	PDI SYMBOL **	FIXTURE UNIT RATING
5005	A	1-11
5010	B	12-32
5020	C	33-60
5030	D	61-113
5040	E	114-154
5050	F	155-330

* SMITH OR EQUAL
** PLUMBING DRAINAGE INSTITUTE "STANDARD PDI WH-201"

WATER HEATER SCHEDULE

EQUIPMENT TAG	AREA SERVED	FLOW CAPACITY (GPM)	STORAGE CAPACITY (GAL)	RECOVERY RATE (GPH)	TEMP. RISE (°F)	ELEMENT (kW)	MCA (Amps)	VOLTAGE	PHASE	BASIS OF DESIGN	NOTES
-	ADMIN BREAKROOM (UNDER SINK)	4.8	INSTANTANEOUS	N/A	69	10.1	49	240	1	EEMAX HA013240	-
-	ADMIN RESTROOMS	4.0	INSTANTANEOUS	N/A	82	24	29/PHASE	480	3	EEMAX ED024480T2T ML	1

NOTES:
1 PROVIDE WITH MULTI LAVS FUNCTION. MIN TURN ON AT 0.3 GPM.

THIS CONFORMED DOCUMENT IS RELEASED FOR THE CONVENIENCE OF THE CONTRACTOR UNDER THE AUTHORITY OF:

DANNY M HURTADO, P.E. — 11-01-22
TX LIC NO. 104266 — DATE

SEE DISCLAIMER FOR LIMITATIONS OF USE.

CONTRACT DOCUMENTS DATED JUNE 10, 2022, AS PART OF THE BIDDING DOCUMENTS (DRAWINGS AND SPECIFICATIONS) AND SUBSEQUENTLY ISSUED ADDENDA HAVE BEEN MERGED INTO ONE CONFORMING SET OF DOCUMENTS FOR THE CONVENIENCE OF THE CONTRACTOR. IF INCONSISTENCIES OR AMBIGUITIES BETWEEN "CONFORMED" DOCUMENTS AND CONTRACT DOCUMENTS ARE FOUND, THE CONTRACT DOCUMENTS SHALL GOVERN.

REV	DATE	BY	DESCRIPTION
			CONFORMED DOCUMENTS

DESIGNED CE
DRAWN CE
CHECKED CE
DATE NOVEMBER 2022

**
ORIGINAL
SEALED BY
CHAD GREEN
06-10-22
TX PE 119980
**

carollo®
TBPELS No. F-882

CITY OF AUSTIN
WILD HORSE RANCH WWTP EXPANSION
PLUMBING
GENERAL NOTES, ABBREVIATIONS AND SYMBOLS

VERIFY SCALES
BAR IS ONE INCH ON ORIGINAL DRAWING
0 1"
IF NOT ONE INCH ON THIS SHEET, ADJUST SCALES ACCORDINGLY

JOB NO. 10976A.00
DRAWING NO. 00P01
SHEET NO. 461 OF 464

PROJECT NO. 10976A10 FILE NAME: 10976A1000P001.dgn
LAST SAVED BY: kbequette Model: Layout1 ColorTable: gshade.ctb DesignScript: Carollo_Std_Pen_v0905.pen PlotScale: 1:1 User: LDietzel Plot Date: 11-OCT-2022 10:02:00 AM

Plot Date: 11-OCT-2022 10:03:25 AM
User: LDietzel
PlotScale: 1:1
DesignScript: Carollo_Std_Pen_v0905.pen
ColorTable: gshade.ctb
Model: Layout1
LAST SAVED BY: ldietzel

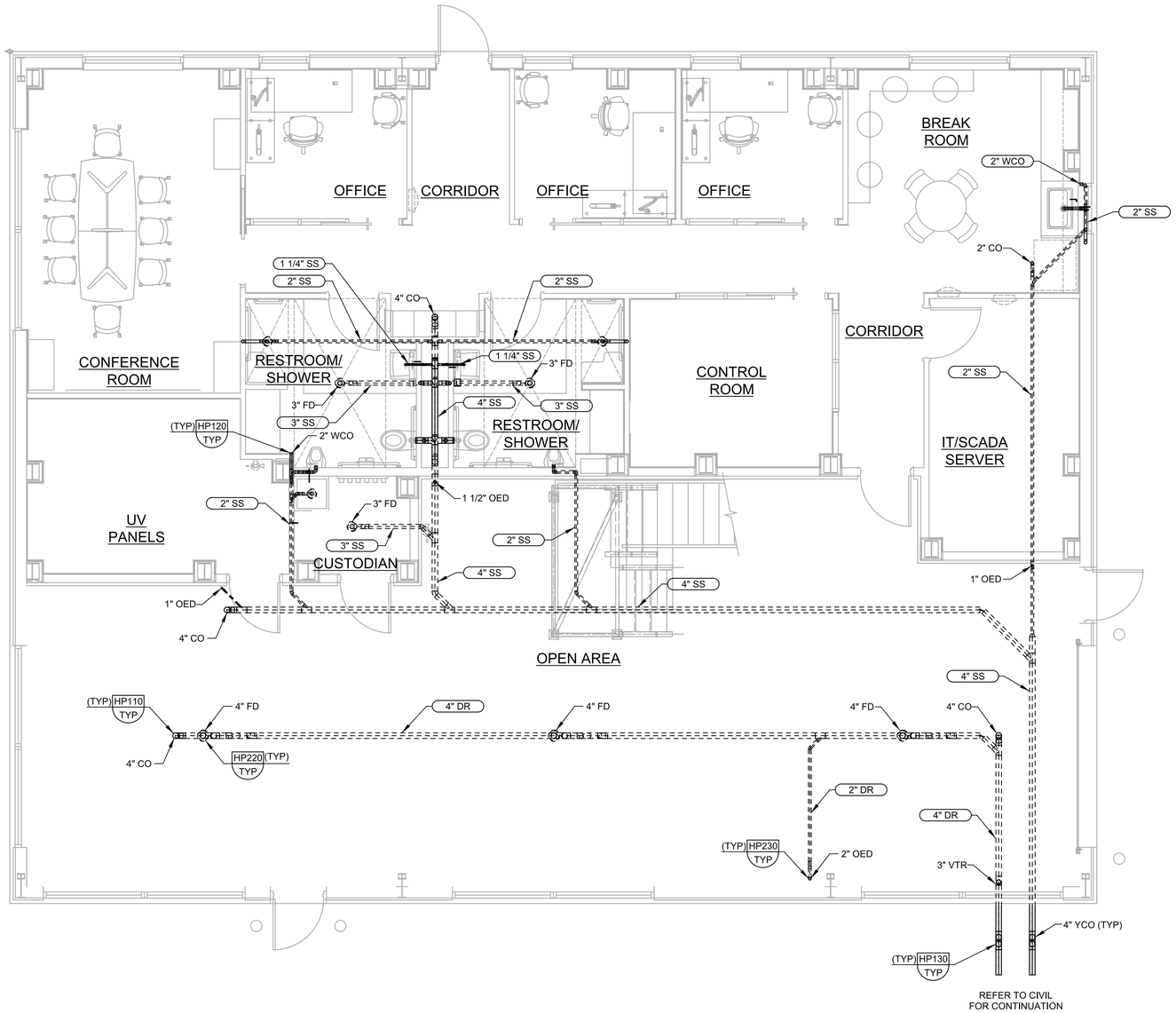

A DRAINAGE PLAN

SCALE: 1/4" = 1'-0"
FILE: 10976A1090P101

GENERAL NOTES:

1. REFER TO SECTION 15400 FOR DETAILS ON PLUMBING FIXTURES AND EQUIPMENT.
2. REFER TO PIPE SCHEDULE SHEET FOR PLUMBING PIPE MATERIALS.
3. PIPING SHALL BE FIELD ROUTED TO AVOID OTHER EQUIPMENT, PIPING, ETC., AS NECESSARY. COORDINATE LOCATION OF PIPES WITH OTHER TRADES AND DISCIPLINES AS NECESSARY.
4. SLOPE DRAINS LINES LESS THAN 3" IN DIAMETER AT A MINIMUM SLOPE OF 1/4" PER FOOT. SLOPE DRAIN LINES 3" AND LARGER IN DIAMETER AT A MINIMUM SLOPE OF 1/8" PER FOOT.
5. SUPPORT PIPING PER DETAILS P660/TYP, P662/TYP AND P664/TYP.
6. INSTALL PIPE PENETRATIONS PER DETAIL P304/TYP.
7. ALL BELOW GRADE DRAIN PIPING TO BE CONCRETE ENCASED PER TYPICAL DETAIL CP119.
8. PROVIDE VENTS THROUGH ROOF (VTR) PER DETAIL P508/TYP. ALL VTRS SHALL BE OFFSET A MINIMUM OF 3'-0" FROM THE ROOF EDGE BEFORE PENETRATING TO THE ROOF.
9. ALL PIPE JOINTS (BURIED OR EXPOSED) ARE RESTRAINED.

THIS CONFORMED DOCUMENT IS RELEASED FOR THE CONVENIENCE OF THE CONTRACTOR UNDER THE AUTHORITY OF:

11-01-22

DANNY M HURTADO, P.E. DATE
TX LIC NO. 104266

SEE DISCLAIMER FOR LIMITATIONS OF USE.

CONTRACT DOCUMENTS DATED JUNE 10, 2022, AS PART OF THE BIDDING DOCUMENTS (DRAWINGS AND SPECIFICATIONS) AND SUBSEQUENTLY ISSUED ADDENDA HAVE BEEN MERGED INTO ONE CONFORMING SET OF DOCUMENTS FOR THE CONVENIENCE OF THE CONTRACTOR. IF INCONSISTENCIES OR AMBIGUITIES BETWEEN "CONFORMED" DOCUMENTS AND CONTRACT DOCUMENTS ARE FOUND, THE CONTRACT DOCUMENTS SHALL GOVERN.

REV	DATE	BY	DESCRIPTION
			CONFORMED DOCUMENTS

DESIGNED TPL
DRAWN BAC
CHECKED CAG
DATE NOVEMBER 2022

** ORIGINAL SEALED BY CHAD GREEN 06-10-22 TX PE 119980 **

carollo®
TBPELS No. F-882

CITY OF AUSTIN
FOUNDED 1839
CITY OF AUSTIN

CITY OF AUSTIN
WILD HORSE RANCH WWTP EXPANSION
PLUMBING
ADMINISTRATION BUILDING DRAINAGE PLAN

VERIFY SCALES
BAR IS ONE INCH ON ORIGINAL DRAWING
0 1"
IF NOT ONE INCH ON THIS SHEET, ADJUST SCALES ACCORDINGLY

JOB NO. 10976A.00
DRAWING NO. 90P01
SHEET NO. 462 OF 464

PROJECT NO. 10976A10 FILE NAME: 10976A1090P001.dgn

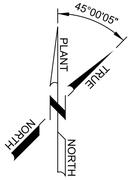

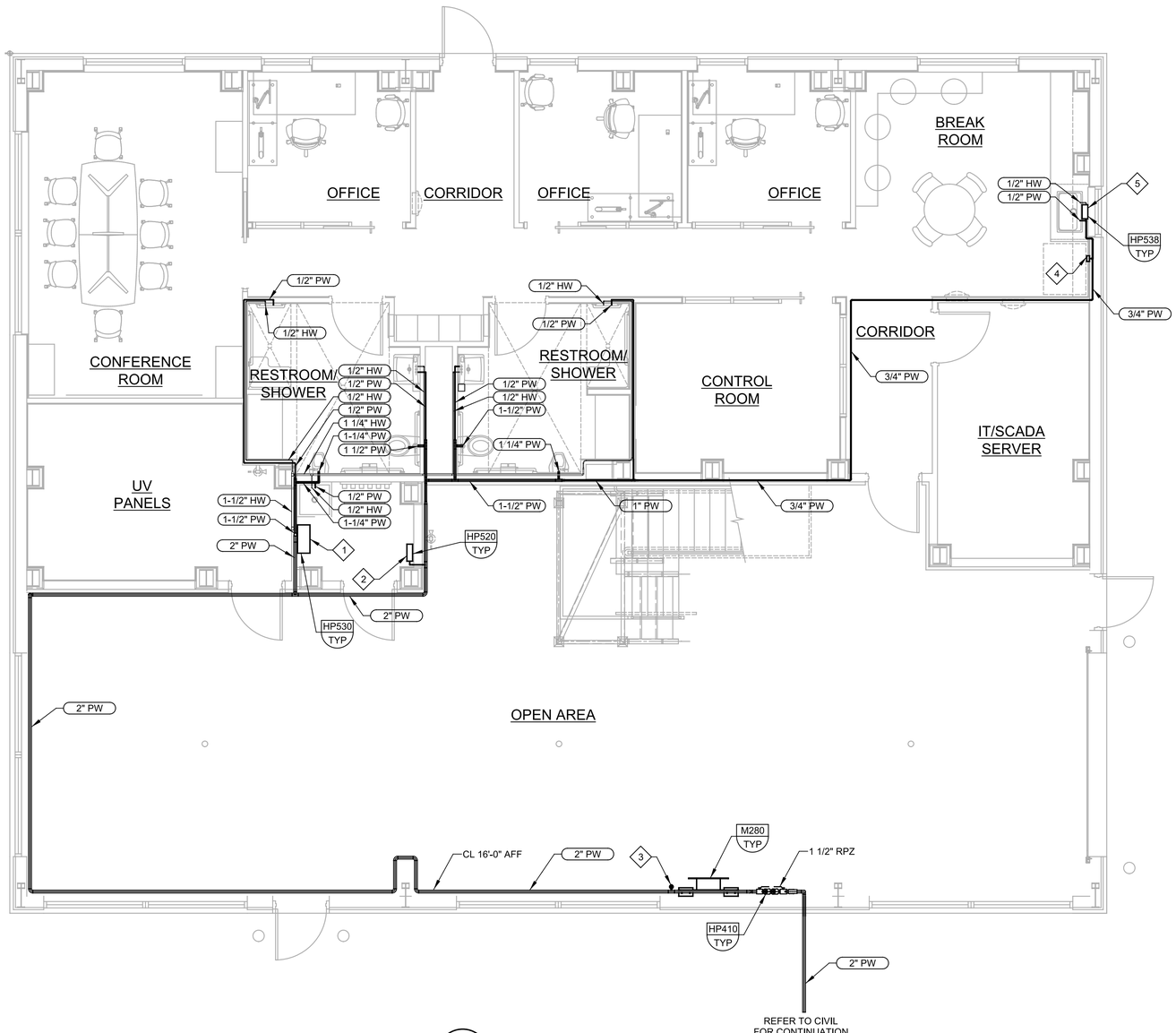

B PLUMBING PLAN

SCALE: 1/4" = 1'-0"
FILE: 10976A1090P102

GENERAL NOTES:

1. REFER TO SECTION 15400 FOR DETAILS ON PLUMBING FIXTURES AND EQUIPMENT.
2. REFER TO PIPE SCHEDULE SHEET FOR PLUMBING PIPE MATERIALS.
3. PIPING SHALL BE FIELD ROUTED TO AVOID OTHER EQUIPMENT, PIPING, ETC., AS NECESSARY. COORDINATE LOCATION OF PIPES WITH OTHER TRADES AND DISCIPLINES AS NECESSARY.
4. SUPPORT PIPING PER DETAILS P660/TYP, P662/TYP AND P664/TYP.
5. INSTALL PIPE PENETRATIONS PER DETAIL P304/TYP.
6. ALL PIPE JOINTS (BURIED OR EXPOSED) ARE RESTRAINED.

KEY NOTES:

1 WALL MOUNTED INSTANTANEOUS HOT WATER HEATER. BOTTOM OF UNIT TO BE 4'-0" ABOVE FINISHED FLOOR (AFF).

2 ELECTRONIC TRAP PRIMER. BOTTOM OF UNIT 5'-0" AFF. ELECTRIC PRIMER IS TO SERVE DRAINS IN THE OPEN AREA ONLY. PROVIDE MECHANICAL PRIMERS FOR REMAINING DRAINS ON SANITARY SEWER LINE.

3 3/4" HOSE BIBB. PROVIDE WITH VACUUM BREAKER.

4 WALL BOX FOR REFRIGERATOR ICE MAKER.

5 UNDER COUNTER INSTANTANEOUS HOT WATER HEATER FOR BREAK ROOM SINK.

THIS CONFORMED DOCUMENT IS RELEASED FOR THE CONVENIENCE OF THE CONTRACTOR UNDER THE AUTHORITY OF:

DANNY M HURTADO, P.E.
TX LIC NO. 104266
11-01-22
DATE

SEE DISCLAIMER FOR LIMITATIONS OF USE.

CONTRACT DOCUMENTS DATED JUNE 10, 2022, AS PART OF THE BIDDING DOCUMENTS (DRAWINGS AND SPECIFICATIONS) AND SUBSEQUENTLY ISSUED ADDENDA HAVE BEEN MERGED INTO ONE CONFORMING SET OF DOCUMENTS FOR THE CONVENIENCE OF THE CONTRACTOR. IF INCONSISTENCIES OR AMBIGUITIES BETWEEN "CONFORMED" DOCUMENTS AND CONTRACT DOCUMENTS ARE FOUND, THE CONTRACT DOCUMENTS SHALL GOVERN.

REV	DATE	BY	DESCRIPTION
			CONFORMED DOCUMENTS

DESIGNED TPL
DRAWN BAC
CHECKED CAG
DATE NOVEMBER 2022

** ORIGINAL SEALED BY CHAD GREEN 06-10-22 TX PE 119980 **

carollo®
TBPELS No. F-882

CITY OF AUSTIN

CITY OF AUSTIN
WILD HORSE RANCH WWTP EXPANSION
PLUMBING
ADMINISTRATION BUILDING DOMESTIC WATER PLAN

VERIFY SCALES
BAR IS ONE INCH ON ORIGINAL DRAWING
0 1"
IF NOT ONE INCH ON THIS SHEET, ADJUST SCALES ACCORDINGLY

JOB NO. 10976A.00
DRAWING NO. 90P02
SHEET NO. 463 OF 464

PROJECT NO. 10976A10 FILE NAME: 10976A1090P002.dgn

Plot Date: 11-OCT-2022 10:04:55 AM
User: LDietzel
DesignScript: Carollo_Std_Pen_v0905.pen
ColorTable: gshade.ctb
Model: Layout1
PlotScale: 1:1
LAST SAVED BY: ldietzel

Plot Date: 11-OCT-2022 10:06:20 AM
User: LDietzel
PlotScale: 1:1
DesignScript: Carollo_Std_Pen_v0905.pen
ColorTable: gshade.ctb
Model: Layout1
LAST SAVED BY: ldietzel

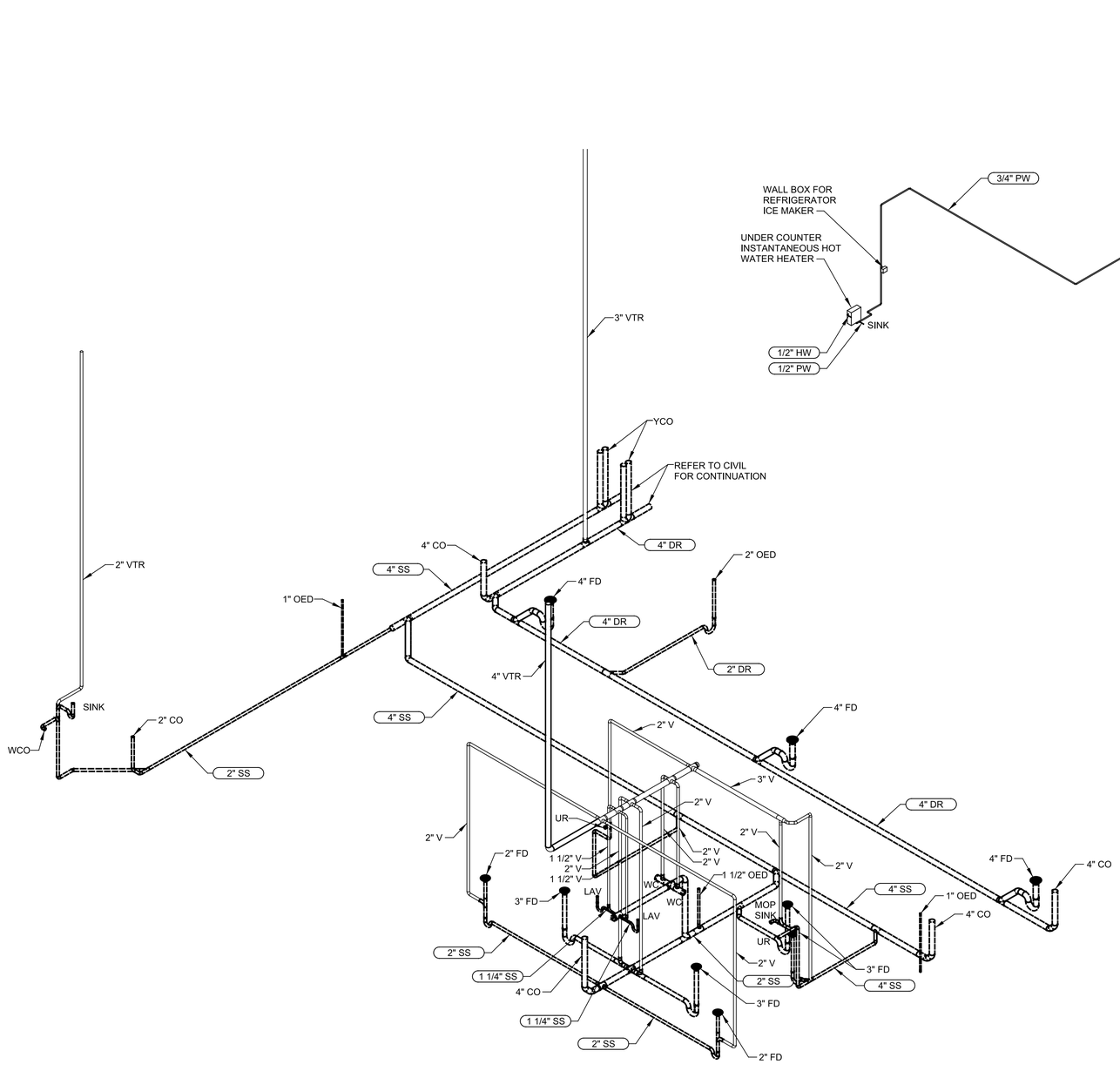

C DRAINAGE ISOMETRIC

NORTH

SCALE: NO SCALE
FILE: 10976A1090H601

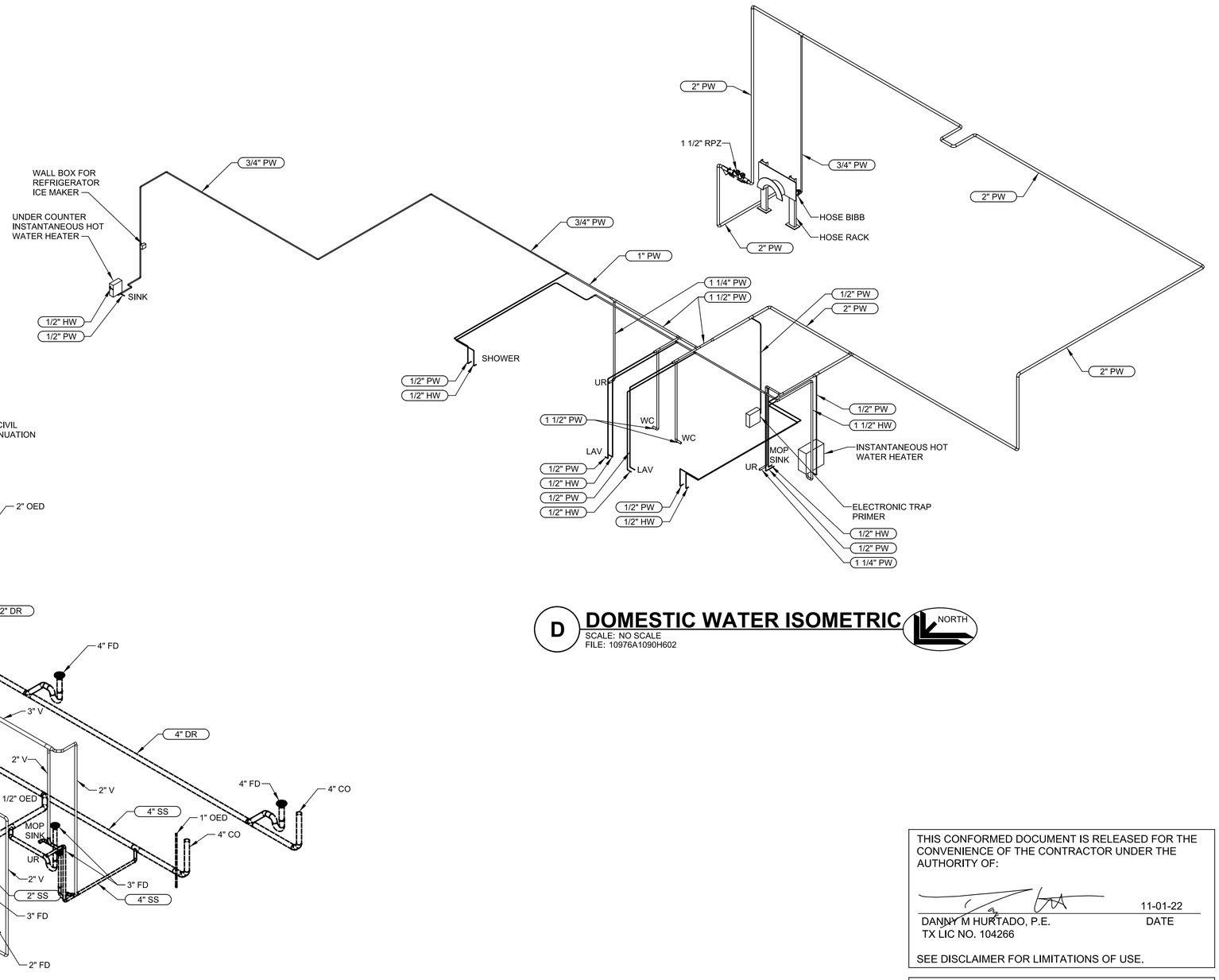

D DOMESTIC WATER ISOMETRIC

NORTH

SCALE: NO SCALE
FILE: 10976A1090H602

THIS CONFORMED DOCUMENT IS RELEASED FOR THE CONVENIENCE OF THE CONTRACTOR UNDER THE AUTHORITY OF:

11-01-22

DANNY M HURTADO, P.E. DATE
TX LIC NO. 104266

SEE DISCLAIMER FOR LIMITATIONS OF USE.

CONTRACT DOCUMENTS DATED JUNE 10, 2022, AS PART OF THE BIDDING DOCUMENTS (DRAWINGS AND SPECIFICATIONS) AND SUBSEQUENTLY ISSUED ADDENDA HAVE BEEN MERGED INTO ONE CONFORMING SET OF DOCUMENTS FOR THE CONVENIENCE OF THE CONTRACTOR. IF INCONSISTENCIES OR AMBIGUITIES BETWEEN "CONFORMED" DOCUMENTS AND CONTRACT DOCUMENTS ARE FOUND, THE CONTRACT DOCUMENTS SHALL GOVERN.

REV	DATE	BY	DESCRIPTION
			CONFORMED DOCUMENTS

DESIGNED TPL
DRAWN BAC
CHECKED CAG
DATE NOVEMBER 2022

** ORIGINAL SEALED BY CHAD GREEN 06-10-22 TX PE 119980 **

carollo
TBPELS No. F-882

CITY OF AUSTIN
FOUNDED 1839

CITY OF AUSTIN

CITY OF AUSTIN
WILD HORSE RANCH WWTP EXPANSION
PLUMBING
ADMINISTRATION BUILDING ISOMETRICS

VERIFY SCALES
BAR IS ONE INCH ON ORIGINAL DRAWING
0 1"
IF NOT ONE INCH ON THIS SHEET, ADJUST SCALES ACCORDINGLY

JOB NO. 10976A.00
DRAWING NO. 90P03
SHEET NO. 464 OF 464

PROJECT NO. 10976A10 FILE NAME: 10976A1090P003.dgn