DATE OF SUBMITTAL:

TNR PERMIT NO: 26-54403

PROJECT DESCRIPTION:

WILBARGER CREEK M.U.D. NO. 2 WWTP EXPANSION TO 1.5 MGD INCLUDING ASSOCIATED SITE IMPROVEMENTS

APPLICABLE CODE:

2015 INTERNATIONAL FIRE CODE WITH APPENDIX B, C, AND D, TRAVIS COUNTY TITLE 2: ORDINANCES AND REGULATIONS.

FEMA FIRM:

A PORTION OF THE LOTS SHOWN HERON IS LOCATED WITHIN THE 100-YEAR FLOODPLAIN AS IDENTIFIED BY THE FEDERAL EMERGENCY MANAGEMENT AGENCY (FEMA), FLOOD INSURANCE RATE MAP (FIRM) MAP AND PANEL NO. 48453C0465J FOR TRAVIS COUNTY, TEXAS DATED AUGUST 18, 2014.

OWNER/DEVELOPER

WILBARGER CREEK MUNICIPAL UTILITY DISTRICT NO. 2
C/O ARMBRUST & BROWN, PLLC
100 CONGRESS AVENUE, SUITE 1300
AUSTIN, TEXAS 78701
ATTENTION: MR. JOHN BARTRAM
TELEPHONE: (512) 435-2300

CIVIL ENGINEER/SURVEYOR

QUIDDITY ENGINEERING, LLC
912 S. CAPITAL OF TX HWY, SUITE 300
AUSTIN, TX 78746
512.441.9493
CONTACT: JORDAN ZYLBERBERG, P.E.

GEOTECHNICAL NOTE:

GEOTECHNICAL REPORT PROVIDED BY
TERRACON NOVEMBER 21, 2025

SWPPP NOTE:

SWPPP WILL BE PROVIDED PRIOR TO COMMENCEMENT OF CONSTRUCTION

NOTES:

1. THE ENGINEER WHO PREPARED THESE PLANS IS RESPONSIBLE FOR THEIR ADEQUACY. IN APPROVING THESE PLANS, TRAVIS COUNTY MUST RELY UPON THE ADEQUACY OF THE WORK OF THE DESIGN ENGINEER.
2. THE ENGINEER WILL MAKE PERIODIC INSPECTIONS AND REPORTS OF THE SITE STATUS AND CONDITIONS DURING CONSTRUCTION TO ENSURE COMPLIANCE WITH THE PLANS AND TO ADDRESS ANY NECESSARY STRUCTURAL COMPLIANCE ITEMS.
3. ALL STRUCTURAL FIELD CHANGES REQUIRE A PLAN REVISION APPROVAL IN WRITING BEFORE COMMENCEMENT OF THE WORK.
4. ALL REVISIONS TO THIS SITE PLAN MUST BE SUBMITTED TO TRAVIS COUNTY FOR REVIEW AND APPROVAL.
5. NO EQUIPMENT, MATERIAL, AND/OR SPOILS SHALL BE STORED OVERNIGHT WITHIN THE FEMA 100-YR FLOODPLAIN, THE CREEK AND THE CWQZ.

PRE-CONSTRUCTION NOTES:

1. PRIOR TO SCHEDULING THE PRE-CONSTRUCTION MEETING ENSURE THAT ALL REQUIRED NOTICES AND PERMITS ARE POSTED AND THE CERTIFIED INSPECTOR FOR YOUR SITE HAS UPLOADED A SWP3 INSPECTION REPORT TO YOUR ACCOUNT THAT CONFIRMS THAT THE FIRST PHASE OF TEMPORARY ESC HAVE BEEN INSTALLED PER PLANS AND SPECIFICATIONS.
2. FAILURE TO FOLLOW THE PRE-CONSTRUCTION MEETING REQUIREMENTS MAY RESULT IN WORK STOPPAGE AND ADDITIONAL PERMIT FEES.
3. SPECIAL PRE-CON NOTES:
   - 3.1. PROVIDE 48 HR. MINIMUM NOTICE TO SCHEDULE THE PRE-CON MEETING.
   - 3.2. PROVIDE A ½ SIZE SET OF PLANS FOR THE INSPECTOR AT THE PRE-CON.
   - 3.3. PROVIDE AN ANTICIPATED CONSTRUCTION SCHEDULE AT THE PRE-CON.
   - 3.4. BRING YOUR SWP3 FOR COMPLETENESS CHECK AT THE PRE-CON.
4. ALL DEVELOPMENT SHALL BE IN ACCORDANCE WITH TRAVIS COUNTY.
5. SCHEDULE YOUR PROJECT'S PRE-CONSTRUCTION MEETING THROUGH THE MYPERMITNOW.ORG ACCOUNT THEN FOLLOW UP WITH EMAILS TO THE ENVIRONMENTAL INSPECTOR AT ENV-INSPECTION@TRAVISCOUNTYTX.GOV AND THE ENGINEERING INSPECTOR.

LEGAL DESCRIPTION:

BEING A 26.178 ACRE TRACT OF LAND SITUATED IN THE CALVIN BARKER SURVEY, ABSTRACT NO. 38, TRAVIS COUNTY, TEXAS; AND BEING ALL OF THE CALLED 26.1790 ACRE TRACT DESCRIBED IN THE GENERAL WARRANTY DEED TO WILBARGER CREEK MUNICIPAL UTILITY DISTRICT NO. 2 RECORDED UNDER DOCUMENT NO. 2008206147 OF THE OFFICIAL PUBLIC RECORDS OF TRAVIS COUNTY, TEXAS.

CONSTRUCTION

OF

WASTEWATER TREATMENT PLANT EXPANSION TO 1.5 MGD

FOR

WILBARGER CREEK MUNICIPAL UTILITY DISTRICT No. 2

TRAVIS COUNTY, TEXAS

TRAVIS COUNTY ESD No. 12

Reviewed by Fire Prevention Division

Approval Expires After 180 Days of Inactivity

Travis County ESD No. 12 is the AHJ for fire code related reviews, permits, inspections, and enforcement on this project.

Approval subject to field inspection and required test(s), notations hereon, conditions noted in correspondence and conformance with applicable codes and regulations.

The stamping and approval of these plans shall not be construed to be a permit for, or an approval of, any violations of any of the provisions of applicable codes or of any other ordinance of this jurisdiction.

Any revisions made after signature date are not valid unless approved by Travis County ESD No. 12 in writing.

Plan Type: _____

Reviewed by: _____

Date: _____

Only stamped sheets approved by Travis County ESD No. 12

ONE-CALL NOTIFICATION SYSTEM
CALL BEFORE YOU DIG!!!
(New Statewide Number)
1-(800) 344-8377

Total Site Area = 26.18 Ac.			
	Acres (Ac.)	Square Feet (SF)	Percentage of Lot (%)
Existing I.C.	1.63	71133.57	6.24%
Removed I.C	0.01	635.33	0.06%
Proposed I.C	0.22	9743.9	0.85%
Net Change I.C.	0.21	9108.57	0.80%
Total Area of I.C.	1.84	80242.14	7.04%
Disturbed Area	6.45	280962	24.64%

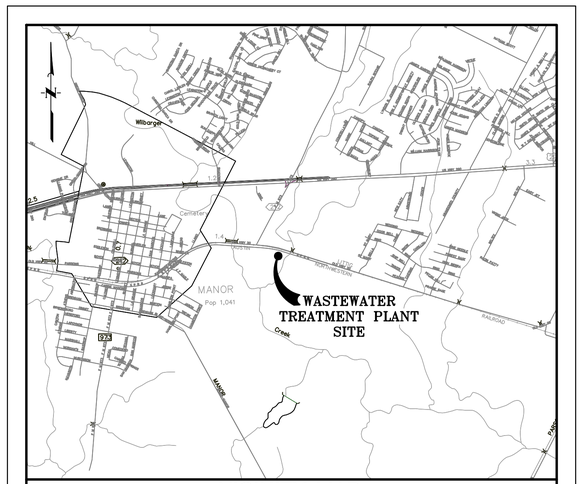

VICINITY MAP
Scale: 1" = 1 Mile

12217 OLD HIGHWAY 20, MANOR, TX 78653

STATE OF TEXAS
JORDAN ZYLBERBERG
142350
LICENSED PROFESSIONAL ENGINEER

JORDAN ZYLBERBERG, P.E — DATE 5/29/26

MAY 2026
JOB No. 0A651-0021-02

QUIDDITY

Texas Board of Professional Engineers and Land Surveyors Reg. No. F-23290
912 South Capital of Texas Hwy, Suite 300 • Austin, TX 78746 • 512.441.9493

TRAVIS COUNTY ESD No. 12

_____ _____
TRAVIS COUNTY ESD No. 12 FIRE MARSHAL — Date

WILBARGER CREEK MUNICIPAL UTILITY DISTRICT No. 2

_____ _____
DISTRICT ENGINEER — Date

Review of the plans by the District is limited to District-owned facilities and does not indicate a review of the adequacy of the design for the facilities. In approving these plans, the District must rely on the adequacy of the work of the design professional.

SIGNATURE AND PERMIT FOR TRAVIS COUNTY

_____
TRAVIS COUNTY TRANSPORTATION AND NATURAL RESOURCES — Date

_____
DEVELOPMENT PERMIT NUMBER — Date

ESD 12/ TRAVIS COUNTY FIRE MARSHAL

FIRE DESIGN CODE: IFC 2015 WITH ESD 12/ TCFM LOCAL AMENDMENTS
INTENDED USE: WASTEWATER TREATMENT PLANT
HIGH RISE: NO

CONSTRUCTION TYPE PER IBC 2015: IIB (Not Sprinklered)

BUILDING AREA: 2083 SF

CALCULATED FIRE FLOW: 1,500 GPM

TRAVIS COUNTY REVISION BLOCK

NO.	DATE	REVISION DESCRIPTION	REVIEWED BY:	DATE

WILBARGER CREEK M.U.D. No. 2 – WASTEWATER TREATMENT PLANT EXPANSION TO 1.5 MGD

QUIDDITY
AUSTIN, TEXAS

SHEET No.
0-G-1
1 OF 230

C:\Users\hc\DC\ACCDocs\Quiddity – Water-\0A651-0021-02 _ WILBARGER WWTP EXP. 1.5 MGD\Project Files\PLANS\CVR.DWG, May 29, 2026 – 8:52am, hc

0 1 2 3 4 5 ORIGINAL SCALE IN INCHES FOR REDUCED PLANS

INDEX OF DRAWINGS

GENERAL

1	0-G-1	COVER SHEET
2	0-G-2	SHEET INDEX
3	0-G-3	GENERAL CONSTRUCTION NOTES - SHEET 1 OF 2
4	0-G-4	GENERAL CONSTRUCTION NOTES - SHEET 2 OF 2
5	0-G-5	TRAVIS COUNTY CONSTRUCTION NOTES
6	0-G-6	GENERAL ABBREVIATIONS
7	0-G-7	GENERAL SYMBOLS
8	0-G-8	PROCESS FLOW DIAGRAM
9	0-G-9	HYDRAULIC PROFILE
10	0-G-10	CONSTRUCTION SEQUENCING PLAN

CIVIL

11	0-C-1	CONTROL AND TOPOGRAPHIC SURVEY SHEET
12	0-C-2	EXISTING OVERALL SITE AND DEMOLITION PLAN
13	0-C-3	EXISTING SITE AND DEMOLITION PLAN - SHEET 1 OF 6
14	0-C-4	EXISTING SITE AND DEMOLITION PLAN - SHEET 2 OF 6
15	0-C-5	EXISTING SITE AND DEMOLITION PLAN - SHEET 3 OF 6
16	0-C-6	EXISTING SITE AND DEMOLITION PLAN - SHEET 4 OF 6
17	0-C-7	EXISTING SITE AND DEMOLITION PLAN - SHEET 5 OF 6
18	0-C-8	EXISTING SITE AND DEMOLITION PLAN - SHEET 6 OF 6
19	0-C-9	OVERALL SITE PLAN
20	0-C-10	SITE PLAN - SHEET 1 OF 6
21	0-C-11	SITE PLAN - SHEET 2 OF 6
22	0-C-12	SITE PLAN - SHEET 3 OF 6
23	0-C-13	SITE PLAN - SHEET 4 OF 6
24	0-C-14	SITE PLAN - SHEET 5 OF 6
25	0-C-15	SITE PLAN - SHEET 6 OF 6
26	0-C-16	OVERALL YARD PIPING PLAN
27	0-C-17	YARD PIPING PLAN - SHEET 1 OF 6
28	0-C-18	YARD PIPING PLAN - SHEET 2 OF 6
29	0-C-19	YARD PIPING PLAN - SHEET 3 OF 6
30	0-C-20	YARD PIPING PLAN - SHEET 4 OF 6
31	0-C-21	YARD PIPING PLAN - SHEET 5 OF 6
32	0-C-22	YARD PIPING PLAN - SHEET 6 OF 6
33	0-C-23	YARD PIPING PLAN SECTION A
34	0-C-24	OVERALL PAVING PLAN - SHEET 1 OF 2
35	0-C-25	OVERALL PAVING PLAN - SHEET 2 OF 2
36	0-C-26	OVERALL GRADING PLAN - SHEET 1 OF 2
37	0-C-27	OVERALL GRADING PLAN - SHEET 2 OF 2
38	0-C-28	EXISTING DRAINAGE AREA MAP
39	0-C-29	PROPOSED DRAINAGE AREA MAP
40	0-C-30	PROPOSED SITE STORM CALCULATIONS
41	0-C-31	RAINGARDEN PLAN & SECTION
42	0-C-32	RAINGARDEN NOTES & CALCULATIONS
43	0-C-33	OVERALL SITE RESTORATION PLAN
44	0-C-34	SITE RESTORATION DETAILS
45	0-C-35	OVERALL EROSION AND SEDIMENTATION CONTROL PLAN
46	0-C-36	EROSION AND SEDIMENTATION CONTROL DETAILS
47	0-C-37	CIVIL DETAILS - SHEET 1 OF 2
48	0-C-38	CIVIL DETAILS - SHEET 2 OF 2
49	0-C-39	SITE DETAILS

MECHANICAL

50	0-M-1	MECHANICAL DETAILS - SHEET 1 OF 4
51	0-M-2	MECHANICAL DETAILS - SHEET 2 OF 4
52	0-M-3	MECHANICAL DETAILS - SHEET 3 OF 4
53	0-M-4	MECHANICAL DETAILS - SHEET 4 OF 4
54	2-M-1	LIFT STATION BYPASS PLAN - SHEET 1 OF 2
55	2-M-2	LIFT STATION BYPASS PLAN - SHEET 2 OF 2
56	2-M-3	LIFT STATION DEMOLITION PLAN & SECTION
57	2-M-4	LIFT STATION IMPROVEMENTS PLAN & SECTION
58	3-M-1	ELEVATED HEADWORKS DEMOLITION PLAN
59	3-M-2	ELEVATED HEADWORKS PLAN
60	3-M-3	ELEVATED HEADWORKS SECTIONS - SHEET 1 OF 3
61	3-M-4	ELEVATED HEADWORKS SECTIONS - SHEET 2 OF 3
62	3-M-5	ELEVATED HEADWORKS SECTIONS - SHEET 3 OF 3
63	4-M-1	PEAK SHAVING BASIN DEMOLITION PLAN
64	4-M-2	PEAK SHAVING BASIN PLAN
65	4-M-3	PEAK SHAVING BASIN PUMP STATION
66	4-M-4	PEAK SHAVING BASIN SECTIONS - SHEET 1 OF 2
67	4-M-5	PEAK SHAVING BASIN SECTIONS - SHEET 2 OF 2
68	4-M-6	PEAK SHAVING BASIN PUMP STATION SECTIONS
69	5-M-1	AERATION BASIN Nos. 1 & 2 PLAN
70	5-M-2	AERATION BASIN No. 3 PLAN
71	5-M-3	RAPID MIX BASIN PLAN
72	5-M-4	AERATION BASIN No. 3 SECTIONS - SHEET 1 OF 3
73	5-M-5	AERATION BASIN No. 3 SECTIONS - SHEET 2 OF 3
74	5-M-6	AERATION BASIN No. 3 SECTIONS - SHEET 3 OF 3
75	6-M-1	CLARIFIER No. 3 PLAN
76	6-M-2	CLARIFIER No. 3 SECTIONS - SHEET 1 OF 3
77	6-M-3	CLARIFIER No. 3 SECTIONS - SHEET 2 OF 3
78	6-M-4	CLARIFIER No. 3 SECTIONS - SHEET 3 OF 3
79	6-M-5	CLARIFIER DETAILS
80	7-M-1	TERTIARY FILTERS BYPASS PLAN
81	7-M-2	TERTIARY FILTERS OVERALL PLAN
82	7-M-3	TERTIARY FILTER PLAN - SHEET 1 OF 2
83	7-M-4	TERTIARY FILTER PLAN - SHEET 2 OF 2
84	7-M-5	TERTIARY FILTER SECTIONS - SHEET 1 OF 2
85	7-M-6	TERTIARY FILTER SECTIONS - SHEET 2 OF 2
86	8-M-1	CHLORINE CONTACT BASIN PLAN DEMOLITION & BYPASS PLAN
87	8-M-2	CHLORINE CONTACT BASIN PLAN & SECTIONS
88	9-M-1	BLOWERS DEMOLITION & SEQUENCING PLAN
89	9-M-2	BLOWERS PLAN
90	9-M-3	BLOWERS SECTIONS
91	10-M-1	NPW SYSTEM DEMOLITION PLAN
92	10-M-2	NPW SYSTEM IMPROVEMENTS PLAN
93	11-M-1	CHEMICAL FEED SYSTEM DEMOLITION PLAN
94	11-M-2	CHEMICAL FEED SYSTEM OVERALL IMPROVEMENTS PLAN
95	11-M-3	SODIUM BISULFITE FEED SYSTEM PLAN
96	11-M-4	SODIUM BISULFITE FEED SYSTEM SECTION
97	11-M-5	ALUM FEED SYSTEM IMPROVEMENTS PLAN
98	11-M-6	ALUM FEED SYSTEM IMPROVEMENTS SECTION
99	11-M-7	SODIUM HYPOCHLORITE FEED SYSTEM IMPROVEMENTS PLAN
100	11-M-8	SODIUM HYPOCHLORITE FEED SYSTEM IMPROVEMENTS SECTION
101	13-M-1	SLUDGE HOLDING TANK DEMOLITION & IMPROVEMENTS PLAN
102	13-M-2	SLUDGE HOLDING TANK SECTIONS
103	14-M-1	DEWATERING PRESS FEED PUMPS PLAN
104	14-M-2	DEWATERING PRESS FEED PUMPS SECTIONS
105	14-M-3	DEWATERING BUILDING ISOMETRIC
106	14-M-4	DEWATERING BUILDING ELEVATIONS - SHEET 1 OF 2
107	14-M-5	DEWATERING BUILDING ELEVATIONS - SHEET 2 OF 2
108	14-M-6	DEWATERING BUILDING PLAN
109	14-M-7	DEWATERING BUILDING UNDERGROUND PLAN
110	14-M-8	DEWATERING BUILDING SECTIONS
111	14-M-9	DEWATERING NPW BOOSTER ISOMETRIC
112	14-M-10	DEWATERING NPW BOOSTER PUMP PLAN & SECTIONS
113	14-M-11	DEWATERING POLYMER SYSTEM ISOMETRIC
114	14-M-12	DEWATERING POLYMER SYSTEM PLAN & SECTIONS - SHEET 1 OF 2
115	14-M-13	DEWATERING POLYMER SYSTEM PLAN & SECTIONS - SHEET 2 OF 2
116	14-M-14	DEWATERING VOLUTE PRESS ISOMETRIC
117	14-M-15	DEWATERING VOLUTE PRESS PLAN
118	14-M-16	DEWATERING VOLUTE PRESS SECTIONS
119	14-M-17	DEWATERING DETAILS
120	15-M-1	GROUND STORAGE TANK PLAN AND DETAILS
121	15-M-2	GROUND STORAGE TANK DETAILS - SHEET 1 OF 3
122	15-M-3	GROUND STORAGE TANK DETAILS - SHEET 2 OF 3
123	15-M-4	GROUND STORAGE TANK DETAILS - SHEET 3 OF 3

STRUCTURAL

124	0-S-1	STRUCTURAL NOTES
125	0-S-2	STRUCTURAL DETAILS - SHEET 1 OF 3
126	0-S-3	STRUCTURAL DETAILS - SHEET 2 OF 3
127	0-S-4	STRUCTURAL DETAILS - SHEET 3 OF 3
128	3-S-1	ELEVATED HEADWORKS STAIRS ADDITION & ELECTRICAL PADS FOUNDATIONS
129	4-S-1	PEAK SHAVING BASIN FOUNDATION PLAN & SECTIONS
130	4-S-2	PUMP PAD PLAN & SECTION
131	6-S-1	AERATION BASIN No. 3 & CLARIFIER FOUNDATION PLAN
132	6-S-2	AERATION BASIN No. 3 & CLARIFIER TOP VIEW PLAN
133	6-S-3	AERATION BASIN No. 3 & CLARIFIER FOUNDATION SECTIONS SHEET 1 OF 2
134	6-S-4	AERATION BASIN No. 3 & CLARIFIER FOUNDATION SECTIONS SHEET 2 OF 2
135	6-S-5	AERATION BASIN No. 3 & CLARIFIER GRATING PLAN & CONNECTING BRIDGE PLAN
136	6-S-6	AERATION BASIN No. 3 & CLARIFIER STEEL SECTIONS
137	9-S-1	BLOWER PAD FOUNDATION PLAN AND SECTION
138	10-S-1	NPW SYSTEM IMPROVEMENTS PLAN & SECTION
139	11-S-1	CHEMICAL SYSTEMS FOUNDATION PLAN AND SECTIONS
140	11-S-2	CHEMICAL SYSTEMS CANOPY PLAN AND SECTIONS
141	11-S-3	CHEMICAL SYSTEMS GRATING PLAN AND SECTIONS
142	14-S-1	DEWATERING BUILDING FOUNDATION PLAN, SECTIONS AND DETAILS
143	14-S-2	DEWATERING BUILDING ROOF PLAN AND SECTIONS
144	14-S-3	STEEL CANOPY FOUNDATION PLAN AND SECTIONS
145	14-S-4	VOLUTE PRESS PLATFORM PLAN AND SECTIONS
146	14-S-5	PRESS FEED PUMP FOUNDATION PLAN AND SECTIONS

ELECTRICAL

147	0-E-1	ELECTRICAL NOTES, LEGENDS AND ABBREVIATIONS
148	0-E-2	ELECTRICAL SCHEDULES - SHEET 1 OF 2
149	0-E-3	ELECTRICAL SCHEDULES - SHEET 2 OF 2
150	0-E-4	CONDUIT SCHEDULE - SHEET 1 OF 6
151	0-E-5	CONDUIT SCHEDULE - SHEET 2 OF 6
152	0-E-6	CONDUIT SCHEDULE - SHEET 3 OF 6
153	0-E-7	CONDUIT SCHEDULE - SHEET 4 OF 6
154	0-E-8	CONDUIT SCHEDULE - SHEET 5 OF 6
155	0-E-9	CONDUIT SCHEDULE - SHEET 6 OF 6
156	0-E-10	ELECTRICAL DUCT BANK SECTIONS
157	0-E-11	ELECTRICAL ONE-LINE DIAGRAM DEMOLITION - SHEET 1 OF 2
158	0-E-12	ELECTRICAL ONE-LINE DIAGRAM DEMOLITION - SHEET 2 OF 2
159	0-E-13	ONE-LINE DIAGRAM - SHEET 1 OF 4
160	0-E-14	ONE-LINE DIAGRAM - SHEET 2 OF 4
161	0-E-15	ONE-LINE DIAGRAM - SHEET 3 OF 4
162	0-E-16	ONE-LINE DIAGRAM - SHEET 4 OF 4
163	0-E-17	NETWORK ARCHITECTURE
164	0-E-18	ELECTRICAL DETAILS - SHEET 1 OF 5
165	0-E-19	ELECTRICAL DETAILS - SHEET 2 OF 5
166	0-E-20	ELECTRICAL DETAILS - SHEET 3 OF 5
167	0-E-21	ELECTRICAL DETAILS - SHEET 4 OF 5
168	0-E-22	ELECTRICAL DETAILS - SHEET 5 OF 5
169	0-E-23	ELECTRICAL HAZARDOUS AREA CLASSIFICATION
170	0-E-24	ELECTRICAL OVERALL SITE PLAN
171	0-E-25	ELECTRICAL SITE PLAN - SHEET 1 OF 6
172	0-E-26	ELECTRICAL SITE PLAN - SHEET 2 OF 6
173	0-E-27	ELECTRICAL SITE PLAN - SHEET 3 OF 6
174	0-E-28	ELECTRICAL SITE PLAN - SHEET 4 OF 6
175	0-E-29	ELECTRICAL SITE PLAN - SHEET 5 OF 6
176	0-E-30	ELECTRICAL SITE PLAN - SHEET 6 OF 6
177	0-E-31	BLOWER CONTROL SYSTEM
178	0-E-32	CLARIFIER CONTROL SYSTEM
179	0-E-33	NPW SYSTEM CONTROL - SHEET 1 OF 3
180	0-E-34	NPW SYSTEM CONTROL - SHEET 2 OF 3
181	0-E-35	NPW SYSTEM CONTROL - SHEET 3 OF 3
182	0-E-36	PEAK SHAVING BASIN CONTROL - SHEET 1 OF 2
183	0-E-37	PEAK SHAVING BASIN CONTROL - SHEET 2 OF 2
184	0-E-38	DEWATERING NPW SYSTEM CONTROL- SHEET 1 OF 2
185	0-E-39	DEWATERING NPW SYSTEM CONTROL- SHEET 2 OF 2
186	0-E-40	PEAK SHAVING BASIN CONTROL - SHEET 1 OF 2
187	0-E-41	PEAK SHAVING BASIN CONTROL - SHEET 1 OF 2
188	0-E-42	PEAK SHAVING BASIN CONTROL - SHEET 1 OF 2
189	0-E-43	SLUDGE HOLDING TANK CONTROL PANEL
190	2-E-1	LIFT STATION ELECTRICAL PLAN
191	3-E-1	ELEVATED HEADWORKS ELECTRICAL PLAN
192	4-E-1	PEAK SHAVING BASIN ELECTRICAL PLAN
193	4-E-2	PEAK SHAVING BASIN PUMP STATION ELECTRICAL PLAN
194	5-E-1	AERATION BASIN No. 3 ELECTRICAL PLAN
195	6-E-1	CLARIFIER No. 3 ELECTRICAL PLAN
196	7-E-1	TERTIARY FILTERS & BACKWASH ELECTRICAL PLAN
197	8-E-1	CHLORINE CONTACT BASIN ELECTRICAL PLAN
198	9-E-1	BLOWERS ELECTRICAL PLAN
199	10-E-1	NPW ELECTRICAL PLAN
200	11-E-1	CHEMICAL SYSTEM ELECTRICAL DEMOLITION PLAN
201	11-E-2	CHEMICAL SYSTEM ELECTRICAL POWER & INSTRUMENTATION PLAN
202	11-E-3	CHEMICAL SYSTEM ELECTRICAL LIGHTING & GROUNDING PLAN
203	12-E-1	ELECTRICAL BUILDING ELECTRICAL PLAN
204	13-E-1	SLUDGE HOLDING TANKS ELECTRICAL PLAN
205	14-E-1	DEWATERING BUILDING POWER PLAN
206	14-E-2	DEWATERING BUILDING INSTRUMENTATION PLAN
207	14-E-3	DEWATERING BUILDING LIGHTING & GROUNDING PLAN
208	14-E-4	DEWATERING BUILDING ELECTRICAL ROOM POWER PLAN
209	14-E-5	DEWATERING BUILDING ELECTRICAL ROOM WORKING SPACE PLAN
210	14-E-6	DEWATERING BUILDING ELECTRICAL ROOM INSTRUMENTATION PLAN
211	14-E-7	DEWATERING BUILDING ELECTRICAL ROOM LIGHTING & GROUNDING PLAN

PROCESS & INSTRUMENTATION

212	2-I-1	LIFT STATION P&ID
213	3-I-1	ELEVATED HEADWORKS P&ID
214	4-I-1	PEAK SHAVING BASIN P&ID
215	5-I-1	AERATION BASIN No. 3 P&ID
216	6-I-1	CLARIFIER No. 3 P&ID
217	7-I-1	TERTIARY FILTERS P&ID
218	8-I-1	CHLORINE CONTACT BASIN P&ID
219	9-I-1	BLOWERS P&ID
220	10-I-1	NPW SYSTEM P&ID
221	11A-I-1	SODIUM HYPOCHLORITE FEED SYSTEM P&ID
222	11B-I-1	SODIUM BISULFITE FEED SYSTEM P&ID
223	11C-I-1	ALUM FEED SYSTEM P&ID
224	13-I-1	SLUDGE HOLDING TANK P&ID
225	14A-I-1	DEWATERING PRESS FEED PUMPS P&ID
226	14B-I-1	DEWATERING NPW BOOSTER PUMPS P&ID
227	14C-I-1	POLYMER SYSTEM P&ID
228	14D-I-1	VOLUTE DEWATERING PRESS P&ID

REGULATORY

229	0-R-1	OVERALL ROAD SITE PLAN
230	0-R-2	FIRE PROTECTION PLAN

NO.	DATE	REVISIONS	APP.

WILBARGER CREEK M.U.D. No. 2
TRAVIS COUNTY, TEXAS

WASTEWATER TREATMENT PLANT
EXPANSION TO 1.5 MGD

SHEET INDEX

QUIDDITY
Texas Board of Professional Engineers and Land Surveyors Reg. No. F-23290
912 South Capital of Texas Hwy, Suite 300 • Austin, TX 78746 • 512.441.9493

SCALE: NONE
DATE: JUNE 2026
JOB NO. 0A651-0021-02
SUBMITTED:
DGN. BY: JZYLBERBERG
DWN. BY: JSTRUHAR
DWG. NO.
SURV. BY:
F.B. NO.

STATE OF TEXAS
JORDAN ZYLBERBERG
142350
LICENSED PROFESSIONAL ENGINEER
7/2/26

0-G-2
SHEET NO. 2 OF 230

C:\Users\JAS\DC\ACCDocs\Quiddity\0A651-0021-02 _ WILBARGER WWTP EXP. 1.5 MGD\Project Files\PLANS\SHEET INDEX.dwg, Jun 30, 2026 - 8:07am, JAS

0 1 2 3 4 5 ORIGINAL SCALE IN INCHES FOR REDUCED PLANS

GENERAL CONSTRUCTION NOTES:

1. Prior to bidding this project, the Contractor shall inspect the work site to field verify that the above and below ground conditions of the site are acceptable for construction. Contractor shall refer to the General Conditions for requirements on handling concerns.
2. The approximate location of existing utilities are given for reference only. Before commencing the work on this contract, the Contractor shall verify by field investigation the actual locations of all utility facilities noted as critical crossings. The Contractor shall be responsible prior to excavation to determine if conflicts exist. The Contractor shall notify the Engineer at once of any conflict prior to commencing any construction. Conflicts which result due to negligence by the Contractor to locate, horizontally and vertically, existing utilities which are shown on the construction drawings, or which the Contractor has been given notice or has knowledge, shall be the sole responsibility of the Contractor. The cost of remedial work, removal of portions of the work or extensive design changes occasioned by the failure of the Contractor to verify the location of existing utilities as described above shall be borne by the Contractor.
3. Contractor shall contact Quiddity Engineering, Mr. Nathan Walton, P.E. at (713) 777–5337 a minimum of 48–hours prior to starting any work.
4. There will be no separate payment for work shown on these plans, unless specifically established in the bid section of the Contract Documents. Include cost of this work in the Contract unit price for items of which this work is a component or incidental.
5. Contractor shall be responsible for taking pre–construction photographs/video and to document existing conditions prior to commencement of construction. Contractor shall furnish Engineer with copies of the photographs and video.
6. All waste materials shall be removed from the site and properly disposed of by the Contractor.
7. Contractor shall be responsible for obtaining all applicable City of Manor, Travis County, State and Federal permits. Contractor to obtain all permits required by regulation of Travis County, Texas, for flood plain management prior to beginning construction. Contractor shall comply with all Federal, State, and local laws and all regulations of utility companies concerning safety and health practices.
8. Contractor shall verify location of existing underground utility lines and shall notify the following agencies at least 48 hours prior but no earlier than 14 calendar days prior to commencement of any excavating near existing facilities:
   a.) Texas 811
   b.) Crossraads Utility Services (District Operator)
9. During construction, the Contractor shall maintain site drainage and safe access to adjacent properties, regardless of the weather conditions. Do not obstruct roadways, drainageways, sidewalks, or passageways adjacent to the construction area.
10. The Contractor shall return all existing facilities to pre–construction or better condition unless otherwise noted at no additional cost to the Owner. Contractor shall be responsible for repairing any damage to existing facilities and property at no increase to the Contract Amount.
11. Any select fill used on the project site shall be in accordance with the "Geotechnical Engineering Report" provided by Terracon Consultants, Inc. dated November 21, 2025.
12. Sanitary facility clearances to potable water facilities shall follow the latest rules and regulations of the City of Manor, Travis County and the Texas Commission on Environmental Quality.
13. The Contractor is responsible for providing red line as–built drawings and final O&M manuals at the completion of this job prior to Substantial Completion.
14. All proposed grating shall be free of any warping or sagging. Any proposed grating which does not lay flat or exhibits movement/instability when subject to loading will be replaced by the Contractor at no additional cost to the Owner.
15. When trench condition warrants the use of dewatering systems, their use shall be requested by the Contractor and approved by the Engineer.
16. Contractor shall remove all mud, dirt and debris deposited or dropped on existing pavement due to construction activity daily. Material that is hazardous to traffic shall be removed immediately.
17. Contractor shall protect all trees adjacent to work area. No trees outside of the work area or the clearing and grubbing limits shall be removed without permission of the Owner.
18. Contractor shall give notice to all authorized inspectors, superintendents, or persons in charge of private and public utilities or railroads affected by operations prior to commencement of work.
19. The loading, unloading and handling of all pipe, valves, hydrants, fittings, manholes, equipment and other accessories shall be in accordance with the manufacturer's recommended practices and shall at all times be performed with care to avoid any damage to the material. The Contractor shall locate and provide the necessary storage areas for materials and equipment.
20. The Contractor shall be responsible for safeguarding and protecting all material and equipment stored on the job site. The Contractor shall be responsible for the storage of materials in a safe and secure manner to prevent injuries, during and after working hours, until project acceptance. Material storage shall match the manufacturer's requirements in order to receive payment for materials on hand.
21. These plans, prepared by Quiddity Engineering, do not extend to or include the designs or systems pertaining to the safety of the Contractor or its employees, agents, or representatives in the performance of the work. The seal of the Registered Professional Engineer hereon does not extend to any such systems that may now or hereafter be incorporated in these plans. The Contractor shall prepare or obtain appropriate safety systems, including the plans and specifications required by House Bill 1569, as currently amended, enacted by the Texas legislature and current O.S.H.A. standards for trench safety and confined space entry.
22. This project is within the Extraterritorial Jurisdiction of the City of Manor and Travis County, Texas.
23. A copy of all material test results shall be submitted to the Engineer. Surplus excavated material from construction of water line and sewers shall be legally disposed of off site by the Contractor.
24. Final grade all areas of the site as shown on grading plan after completion of all other construction activities. Grade all areas of the site smooth to drain. Thoroughly clean site to remove all construction debris such as concrete rubble, rebar, etc. Hydromulch all areas which were disturbed during construction.
25. Provide isolation joints between all proposed sidewalks and all slabs, structures, and pavements. Also provide isolation joints where pipes penetrate concrete slabs or pavement. Isolation joints shall consist of asphalt impregnated fiberboard and joint sealant material.

GENERAL CONSTRUCTION NOTES CONT'D:

25. Should soft unstable areas appear during the course of grading, the Contractor shall remove unstable material as directed by the Engineer. The Contractor shall replace this with a suitable material compacted as required per specifications. (Limited to 18" at no cost to the Owner.)
26. Hand dig as required around existing utilities. The Contractor shall be fully responsible for any and all damage to existing electrical, control and utility lines during construction. The current Owner of any existing utilities disturbed during construction of this project shall be notified immediately of any damages and lines shall be repaired in a timely manner to avoid any lengthy disruption of service. Repairs shall be made at no cost to the Public or the Owner.
27. Internal access road shall remain accessible at all times during the proposed work. Contractor shall provide temporary plating as necessary for continued operations, chemical deliveries, and sludge and screenings hauling.

PLANT START–UP AND COORDINATION NOTES:

1. Contractor shall notify Engineer of and be present for the start–up of all new equipment and shall be responsible for proper start–up procedures as recommended by the manufacturer. A manufacturer representative shall be present for start–up or pre–start–up inspection as required by the specifications and recommended by the manufacturer of each equipment item. No equipment will qualify for substantial completion until Contractor meets all conditions including, but not limited to, submitting start–up reports to the Engineer.
2. The existing wastewater treatment plant shall remain on–line at all times during the proposed construction. The Contractor shall schedule all shut–downs with the Engineer and Operator as far in advance as possible, but at least 14 calendar days prior to the planned shut–down. All shut–downs or interruptions shall be pre–approved by the Engineer and Operator. Contractor shall assume all responsibility for providing adequate system monitoring, by pass pumping, manpower and equipment to prevent sewer back–ups and spills. (No separate pay)
3. Contractor shall take steps necessary to maintain continuous service to all Wilbarger Creek Municipal Utility District No. 2 wastewater customers within the service area of the existing plant during construction.
4. Contractor shall schedule work and maintain access to the facility for normal plant operations (i.e. sludge hauling, chemical delivery, etc.)
5. Upon initial shut down of each basin, the Operator shall be responsible for removal of bulk liquid, grit, solid and semi–solid material to within six–inches (6") of the basin floor. All subsequent dewatering and disposal operations (including removal of last six–inches (6") of material, and removal of rainwater) shall be the responsibility of the Contractor at no additional cost to the Owner.
6. Contractor shall coordinate shutdowns and switchovers with the Operator and Engineer to coincide with daily periods of low influent flow. This may require that the work be performed outside of traditional working hours at no change in the Contract amount. This may vary depending on the actual flow into the system. The Contractor shall assume all responsibility for providing adequate system monitoring, bypass pumping, manpower, and equipment to prevent sewer back–ups and spills associated with the work of this contract (no separate pay). Coordination of activities is the Contractor's responsibility.
7. The Contractor shall perform all start–up and shut–down operations of all proposed basins and equipment under the supervision of the Operator.
8. The Contractor shall seed the new plant for a minimum of 7 calendar days with mixed liquor from the existing wastewater treatment plant aeration basins prior to placing the new plant into service. Contractor shall provide all equipment necessary to transfer the mixed liquor. All pumping plans shall be coordinated with the Operator and submitted to the Engineer for approval no less than 14 calendar days prior to installation. Seeding of new train is a condition for Substantial Completion.
9. With the approval of the Engineer, the Contractor may provide and install valves, fittings, or other equipment to allow the individual piping tie–ins to be made in advance of the switchover while still keeping the existing process in operation. However all costs for additional labor, equipment, and materials shall be included in the base bid.

GRADING NOTES:

1. Areas that are to receive fill will be stripped to a depth of three–inches (6"). Strippings shall be stock piled and then spread evenly on surface of fill areas.
2. Fill shall be placed in accordance with the Terracon Geotechnial Investigation Report (Project No. 96255135)

PLANT PIPING NOTES:

1. All piping shall be ductile iron pipe (D.I.P.) unless otherwise noted on the drawings or in the specifications. Provide flanged joint (Flg. or F.J.) pipe and fittings on aboveground pipe and on underground pipe as shown. Provide flanged, restrained joint push–on, or restrained mechanical joint (P.O. restrained or M.J. restrained) pipe and fittings for below ground pipe underneath concrete structures and on the first below ground fitting from an above ground piping run. All other underground D.I.P. shall have pressure type push–on or mechanical (P.O. or M.J.) joints and fittings unless otherwise shown. Use polywrap on all underground D.I.P. and coat all aboveground D.I.P. in accordance with Section 09921 of the specifications.
2. Bed and backfill underground piping as shown in the bedding details on civil details sheets. Process lines shall have class "C" pipe bedding, sanitary sewers and storm sewers shall have class "AA" bedding. Process lines shall be defined as all lines other than gravity sanitary sewers and storm sewers and miscellaneous small diameter piping. For pipe below structures, structural backfill requirements shall control over piping backfill requirements.
3. All underground nuts and bolts must be 304 stainless steel. All aboveground nuts and bolts must be 304 stainless steel unless otherwise specified or noted. All dissimilar pipe, bolt, nut or structure material must be installed with isolation kits.
4. All P.V.C. chlorination piping shall be Schedule 80 regardless of size.
5. All reinforced concrete pipe (R.C.P.) shall be Class III, ASTM C–76 with ASTM C–443 rubber gasket joints.

PLANT PIPING NOTES CONT'D:

6. All steel pipe shall be Schedule 40, hot–dip galvanized unless otherwise noted on the drawings or in the specifications. All flanged HDG steel pipe greater than four–inches (4") in diameter shall be shop fitted after fabrication.
7. All proposed lines shall be painted as indicated on the drawings and in accordance with the specifications, including color code, flow direction and process labels. Apply labels in a prominent location as directed by the Engineer. As a general rule, labels shall be provided for each pipe where it enters or exits a structure or pump.
8. All non–metallic underground pipe shall be installed with tracer tape.
9. Contractor shall maintain a six–inch (6") working clearance between all flanged pipe connections and any obstruction (such as structures, walls, slabs, walkway or equipment).
10. All piping lengths shown on call–outs on plan view layouts are for general reference only and must be confirmed by the Contractor.
11. All proposed pipes running across walkways shall be painted with black and safety yellow stripes two–inches (2") wide, and lettered "Watch Your Step" in white letters from both directions of pipe crossing.
12. All proposed non–potable water piping 3" and above shall be integrally colored purple pipe. All proposed aboveground non–potable water pipes shall have pipe insulation in accordance with Specification 15226 to protect against freezing. Insulation shall be fitted around pipe, and wrapped with tape, adhesive labels, manufactured by 3M or other approved manufacturer. Adhesive labels shall be rated for outdoor use including UV resistance and water resistance every 20 feet (20') that read "Non–Potable Water" in purple text. Wrap valves and fittings with insulating tape. Paint non potable hose bibs purple. Provide and install hose reels or racks at all hose bibb locations. Hose reels shall be of steel construction with HDG finish. Reels shall include hand crank and shall be floor or wall mounted as appropriate for each application. All proposed potable water lines 3" and above shall be integrally colored light blue and if above ground shall be in accordance with Specification 15190 and Specification 15226.
13. Contractor to field verify fitting requirements for all tie–ins to existing piping.
14. Unless otherwise shown on the construction drawings, all pipe centered in walls shall have a wall flange. All wall flanges shall be cast–in–place with structural concrete or grouted in block–outs with non–shrink grout. All block–outs for through–wall piping shall be keyed, unless otherwise noted.
15. All plant piping to be tested in accordance with the Contract Specifications. Contractor shall furnish equipment and utilities as necessary for testing. Piping shall pass testing prior to backfill of piping or completion of placement of concrete above piping. Full payment will not be recommended on piping until passing tests are provided.

SIGNAGE NOTES:

1. Provide aluminum warning signs at all non–potable hose bibbs which read "Non–Potable Water – Do Not Drink" in both English and Spanish. Mount signs to adjacent structures as necessary. Minimum size is 14"x10".
2. Provide identification numbers for each pump, blower, or miscellaneous piece of equipment, which corresponds to the identification numbers in the motor control center and control panels. These numbers shall be located on the vertical discharge pipes of the pumps or blowers and on the concrete top slab of pump station adjacent to the pump. The numbers shall consist of one coat of black polyurethane paint applied with a stencil. Number height shall be at least four–inches (4").
3. Provide an aluminum sign where any electrical equipment, panels, or motor control centers are located within a building, approximately 12" x 24" in size with lettering minimum 4" in size, which contains the following information: "ELECTRICAL ROOM" Mount the sign on the outside of the exterior doors to the electrical room.
4. Label all process lines (RAS, WAS, mixed liquor, influent, effluent NPW, etc.) including an arrow indicating flow direction. Labels shall consist of one coat of black polyurethane paint applied with a stencil. Letter height shall be a minimum of three inches (3"). Apply labels in a prominent location as directed by the Engineer. As a general rule, labels shall be provided for each pipe where it enters or exits a structure or pump.

CONCRETE CONSTRUCTION NOTES:

1. Forms may be removed after concrete has reached its initial set, but no sooner than 24 hours after the pour. Curing compounds must be applied as the forms are stripped. See specification 03300 for more details.
2. Proposed construction joint plans shall be provided to the Engineer for review and approval before commencing work on associated structure. All construction joints must have the latence removed to expose bare aggregate by bush hammering or other approved methods before starting the next pour.

DISTRICT ENGINEER GENERAL NOTES:

1. The District Engineer, Jones–Heroy & Associates, Inc. (Ken Heroy, PH. 512–989–2200) shall be contacted 48 hours prior to:
   I) Pre–construction meetings
   II) Beginning each phase of construction
   III) Testing of water and/or wastewater lines; and,
   IV) Final walk–through of facilities.

NO.	DATE	REVISIONS	APP.

WILBARGER CREEK M.U.D. No. 2
TRAVIS COUNTY, TEXAS

WASTEWATER TREATMENT PLANT
EXPANSION TO 1.5 MGD

GENERAL CONSTRUCTION NOTES – SHEET 1 OF 2

QUIDDITY
Texas Board of Professional Engineers and Land Surveyors Reg. No. F-23290
912 South Capital of Texas Hwy, Suite 300 • Austin, TX 78746 • 512.441.9493

SCALE: NONE
DATE: JUNE 2026
JOB NO. 0A651–0021–02
SUBMITTED:
DGN. BY: JZYLBERBERG
DWN. BY: SSOMERS
DWG. NO.
SURV. BY:
F.B. NO.

STATE OF TEXAS
JORDAN ZYLBERBERG
142350
LICENSED PROFESSIONAL ENGINEER
7/2/26

0–G–3
SHEET NO. 3 OF 230

C:\Users\JAS\DC\ACCDocs\Quiddity\0A651–0021–02 _ WILBARGER WWTP EXP. 1.5 MGD\Project Files\PLANS\MISCD.dwg, Jun 25, 2026 – 5:29pm, JAS

0 1 2 3 4 5 ORIGINAL SCALE IN INCHES FOR REDUCED PLANS

EROSION AND SEDIMENTATION CONTROL NOTES

1. Prior to start of construction, Contractor shall install erosion and sedimentation controls at locations shown on the site layout sheets.
2. Contractor shall inspect all erosion and sedimentation control systems specified herein, at a minimum of once a week.
3. Contractor shall maintain, repair and/or replace damaged erosion and sedimentation control system throughout the duration of the contract (No separate pay).
4. Contractor shall provide protected storage areas for chemicals, paints, solvents, fertilizers, and other potentially toxic materials.
5. Contractor shall locate fuel/material storage areas away from storm water conveyance systems. Contractor shall use silt fencing, hay bales, or berms around fuel storage areas (No separate pay).
6. Contractor shall advise Owner immediately, verbally, and in writing, of any fuel or toxic material spills onto the project/construction area and the action taken to remedy the problem.
7. Contractor is responsible for disposing of his fuels, materials, and contaminated excavations in a legally approved manner (No separate pay).
8. Contractor is responsible for complying with all applicable environmental laws.
9. Contractor is responsible for providing adequately maintained sanitary facilities.
10. At completion of the contract, the Owner and/or Owner's representative with the Contractor shall examine erosion and sedimentation control system before relieving Contractor of his maintenance responsibilities.
11. If erosion and sedimentation control system is existing from prior contracts, Owner and/or Owner's representatives with the Contractor shall examine the existing erosion and sedimentation control system for damage prior to Contractor starting construction of the contract. Any damage noted at this time shall be repaired at no additional cost to the Owner.
12. Contractor shall be responsible for street cleaning, on a daily basis, of all mud and dirt deposited on the existing pavement due to his construction activity.

CLEARING AND GRUBBING NOTES:

1. Clearing and grubbing consists of removal and disposal of trees, stumps, brush, roots, vegetation, logs, rubbish, and other objectionable matter within street rights–of–way, easements, or other designated areas, including previously cleared trees as directed by Engineer at no separate pay.
2. Clearing and grubbing will be paid for at the contract lump sum price bid.
3. The Contractor may use equipment and materials necessary to properly complete clearing and grubbing. Contractor shall obtain approval for equipment and materials before beginning clearing and grubbing.
4. Remove stumps and roots within pavement section to a minimum depth of two (2) feet below finish subgrade elevation. For areas outside pavement section, remove stumps and roots to a minimum depth of two (2) feet below finish surface of required cross–section.
5. Take special care not to damage trees which are outside the limits of clearing and grubbing. The Contractor shall be responsible for tree damage outside of the limits.
6. Unless otherwise specified, all cleared and grubbed material becomes the property of the Contractor, to be removed from the work site or disposed of in a manner not to damage the Owner. Burning of cleared and grubbed material on the Owner's property is not permitted.
7. The Contractor shall verify location and depth of existing utilities before commencing.
8. Clear areas designated for select clearing as directed by the Engineer. Every effort to save specimen trees will be taken.
9. Contractor to provide positive drainage upon completion of clearing and grubbing.
10. Contractor to dig two (2) foot minimum test holes for grubbing verification as directed by the Engineer at no separate pay.

NO.	DATE	REVISIONS	APP.

WILBARGER CREEK M.U.D. No. 2
TRAVIS COUNTY, TEXAS

WASTEWATER TREATMENT PLANT
EXPANSION TO 1.5 MGD

GENERAL CONSTRUCTION NOTES – SHEET 2 OF 2

QUIDDITY
Texas Board of Professional Engineers and Land Surveyors Reg. No. F-23290
912 South Capital of Texas Hwy, Suite 300 • Austin, TX 78746 • 512.441.9493

SCALE: NONE
DATE: FEBRUARY 2026
JOB NO. 0A651–0021–02
SUBMITTED:
DGN. BY: JZYLBERBERG
DWN. BY: SSOMERS
DWG. NO.
SURV. BY:
F.B. NO.

STATE OF TEXAS
JORDAN ZYLBERBERG
142350
LICENSED PROFESSIONAL ENGINEER
3/10/26

0–G–4
SHEET NO. 4 OF 230

C:\Users\JAS\DC\ACCDocs\Quiddity\0A651–0021–02 _ WILBARGER WWTP EXP. 1.5 MGD\Project Files\PLANS\MISCD.dwg, Feb 10, 2026 – 4:55pm, JAS

0 1 2 3 4 5 ORIGINAL SCALE IN INCHES FOR REDUCED PLANS

TRAVIS COUNTY STANDARD CONSTRUCTION NOTES FOR SITE DEVELOPMENT

1. Each driveway must be constructed in accordance with Travis County code section 482.302(g), and each drainage structure or system must be constructed in accordance with the City of Austin Drainage Criteria Manual, unless other design criteria are approved by Travis County.
2. Before beginning any construction, the Owner must obtain a Travis County development permit and post the development permit, the TCEQ site notice, and any other required permits at the job site.
3. Construction may not take place within Travis County right–of–way until after the Owner has submitted a traffic control plan to Travis County and obtained written approval of the traffic control plan from Travis County.
4. The Contractor and primary Operator shall follow the sequence of construction and the SWP3 in these approved plans. the Contractor and primary Operator shall request Travis County inspection at specific milestones in the sequence of the construction of the site development corresponding to the priority inspections specified in construction sequencing notes in these approved plans. development outside the limits of construction specified in the approved permit and construction plans is prohibited.
5. Before beginning any construction, all Storm Water Pollution Prevention Plan (SWP3) requirements shall be met, and the first phase of the Temporary Erosion Control (ESC) plan installed with a SWP3 inspection report uploaded to mypermitnow.org. All SWP3 and ESC plan measures and primary Operator SWP3 inspections must be performed by the primary Operator in accordance with the approved plans and SWP3 and ESC plan notes throughout the construction process.
6. Before starting construction, the Owner or Contractor or their designated representatives shall submit a request via the mypermitnow.org customer portal for Travis County to request and schedule a mandatory pre–construction conference and ESC inspection. If further assistance is needed, the TNR planning and Engineering division staff or TNR Storm Water Management Program staff can be contacted by telephone at 512–854–9383.
7. The Contractor shall keep Travis County TNR assigned inspection staff current on the status of site development and utility construction. The Contractor shall notify Travis County and request priority inspections through the mypermitnow.org customer portal for Travis County in accordance with the specific milestones in the construction sequencing notes in these approved plans.
8. Contour data source: Quiddity ground survey July 23, 2025 (NAVD 88, GEOID 18)
9. Fill material must be managed and disposed of in accordance with all requirements specified in the approved plans, SWP3, and the Travis County code. The Contractor shall stockpile fill and construction materials only in the areas designated on the approved plans and not within the 100–year flood plain, waterway setback, critical environmental feature setback, or outside the limits of construction. Disposal of solid waste materials, as defined by state law (e.g., litter, tires, decomposable wastes, etc.) is prohibited in permanent fill sites.
10. Before disposing any excess fill material off–site, the contractor or primary operator must provide the county inspector documentation that demonstrates that all required permits for the proposed disposal site location, including Travis County, TCEQ notice, and other applicable development permits, have been obtained. the owner or primary operator must revise the SWP3 and ESC plan if handling or placement of excess fill on the construction site is revised from the existing SWP3. If the fill disposal location is outside Travis County or does not require a development permit, the contractor or primary operator must provide the county inspector the site address, contact information for the property Owner of the fill.
11. The design Engineer is responsible for the adequacy of the construction plans. in reviewing the construction plans, TCESD12 will rely upon the adequacy of the work of the design Engineer.
12. In the event of any conflicts between the content in the SWP3 site notebook and the content in the construction plans approved by Travis County, the construction plans shall take precedence.
13. A minimum of two survey benchmarks shall be set, including description, location, and elevation; the benchmarks should be tied to a Travis County control benchmark when possible.
14. Any existing pavement, curbs, sidewalks, or drainage structures within county right–of–way which are damaged, removed, or silted, will be repaired by the Contractor at Owner or Contractor's expense before approval and acceptance of the construction by Travis County.
15. Call the Texas excavation safety system at 8–1–1 at least 2 business days before beginning excavation activities.
16. All storm sewer pipes shall be Class III RCP, unless otherwise noted.
17. Contractor is required to obtain a utility installation permit in accordance with Travis County Code Section 482.901(a)(3) before any construction of utilities within any Travis County right–of–way.
18. This project is located on the FEMA Flood Insurance Rate Map for Travis County, Texas and Incorporated Areas, Panel No. 48453C0485J, effective date August 14, 2014.
19. Temporary stabilization must be performed in all disturbed areas that have ceased construction activities for 14 days or longer, in accordance with the standards described in the SWP3 and ESC plan sheet notes.
20. Permanent site stabilization / re–vegetation must be performed immediately in all site areas which are at final plan grade and in all site areas specified in the approved plans for phased re–vegetation, in accordance with the standards described in the SWP3 and ESC plan sheet notes.
21. All trees within the right–of–way and drainage easements shall be saved or removed in accordance with the approved construction plans. Travis County tree preservation standards in Travis County Code Section 482.973, including installation and maintenance of all specified tree protection measures, must be followed during construction.
22. An Engineer's concurrence letter in accordance with Travis County Code Section 482.953 must be submitted via the mypermitnow.org customer portal for Travis County when construction is substantially complete. The Engineer's concurrence letter must be submitted before the contractor or primary operator requests a final inspection by Travis County.
23. Site improvements must be constructed in conformance with the Engineer's construction plans approved by Travis County. Non–conformance with the approved plans will delay final inspection approval by the county until plan conformance is achieved or any required plan revisions are approved.
24. Final site stabilization. All areas disturbed by the construction must be permanently re–vegetated and all temporary sediment controls and accumulated sedimentation must be removed before the county will issue a certificate of compliance for final site stabilization as part of final inspection and project completion. a developers contract, as described in the SWP3 and ESC notes sheet may be executed with Travis County for conditional acceptance of a project for which has ESC fiscal security posted and for which all items are complete.

PRE–CONSTRUCTION AND CONFERENCE AGENDA FOR SWP3 AND ESC PLAN

Before starting construction, the owner or their representative must submit a request, using the mypermitnow.org customer portal for Travis County, to participate in a pre–construction conference with the designated county inspector. Prior to the pre–construction conference request, the Owner or Owner's representative shall ensure the first phase of the ESC controls are installed in conformance with the approved plans, the Owner's qualified Inspector has inspected the controls and verified compliance with the plans, and an SWP3 inspection report documenting this information has been sent to the county through the method specified by the designated county Inspector.

After arranging an agreed upon date with the County and providing the initial SWP3 inspection report, the Owner or Owner's designated representative shall provide notice of the SWP3 pre–construction conference and a copy of the approved plans, if requested, to the following persons or entities at least two business days before the conference:

1. Designated County Inspector(s)
2. Design Engineer for the approved plans and SWP3, or their representative
3. Contractor(s) / primary Operator(s)
4. Primary Operator's qualified Inspector responsible for preparing the SWP3 Inspection reports
5. Other Stakeholders, as appropriate: municipalities, utilities, etc.

The SWP3 pre–construction conference may be a standalone meeting or a part of a larger pre–construction conference, but must include an on–site inspection approval of the first phase of the project's ESC plan by the county inspector before construction begins. The county inspector will discuss the following applicable items in the approved plans and the SWP3 with the participants:

1. The SWP3 site notebook for the project, including review of completeness, signatures, consistency with the approved construction and esc plans, and the requirements for maintaining the SWP3 site notebook during the construction process.
2. The sequence of construction and ESC plan implementation; sediment basin construction scope prior to full site grading; non–structural erosion source controls; start dates and schedule of events.
3. Sediment controls; phasing of perimeter and interior sediment controls during construction; structural erosion source controls such as drainage diversion; ESC maintenance requirements.
4. Adequacy of the first ESC phase and future ESC phases to address specific site conditions, and adjustment and revision of the ESC plan and SWP3 controls during construction.
5. Temporary and permanent stabilization and re–vegetation requirements, including schedule, critical site improvements and priority re–vegetation area.
6. On and off–site temporary and permanent spoil and fill disposal areas, haul roads, staging areas, and stabilized construction entrances.
7. Permanent water quality controls construction and county inspections, and related grading and drainage construction.
8. Supervision of the SWP3 implementation by the primary operators designated Project Manager, including roles, responsibilities, and coordination when more than one operator is responsible for implementation.
9. Inspection and preparation of the weekly SWP3 inspection reports by the primary Operator's qualified inspector; report submittal by the primary operator, and SWP3 monitoring inspections conducted by the county inspector.
10. Observation and documentation of existing site conditions adjacent to the limits of construction before construction, including waterways and potential outfall discharge routes, rights–of–way and easements, buffer zones, and critical environmental features.
11. Special site conditions and plan provisions, such as protection of waterways, critical environmental features, trees to be saved, and future homebuilding of subdivision lots.
12. Rain gage location or rainfall information source to be used during construction and reporting.
13. Final inspection and acceptance requirements, including the engineer's concurrence letter, completion of re–vegetation coverage before the notice of termination is submitted by the primary Operator, stabilization of residential subdivision lots, removal of temporary sediment controls, the certificate of compliance and release of ESC fiscal surety.
14. Exchange of telephone numbers and contact information for the primary participants. The design Engineer shall prepare and distribute notes, key decisions, and follow up from the pre–construction conference to all participants within three business days after completion of the conference.

The Design Engineer shall prepare and distribute notes, key decisions, and follow up from the pre–construction conference to all participants within three business days after completion of the conference.

SWP3 INSPECTION AREAS AND REPORT CONTENTS

The Owner or primary Operator of the construction site shall designate a qualified inspector possessing the required certification (as specified in section 482.934(c)(3)) to perform a weekly SWP3 inspection and prepare a signed SWP3 inspection report of the inspection findings.

The construction site areas and the control measures listed herein are to be used as a minimum as the uniform criteria by the owner's qualified inspector, as well as the county inspector, to evaluate and determine a project's compliance status with the approved SWP3 and ESC plan.

In addition, on an ongoing basis and following storm events, the primary operator's responsible on–site personnel shall also inspect and address these items during construction as required by the SWP3, ESC plan, and Travis County Code, Section 482.951.

Areas of inspection. At the very least, the following areas must be inspected:

1. Disturbed areas and the approved limits of construction.
2. Perimeter and interior sediment controls.
3. Areas undergoing temporary stabilization or permanent vegetation establishment.
4. Temporary and permanent fill and spoil storage or disposal areas.
5. Storage areas for materials and equipment that are exposed to rainfall.
6. Outfall locations and the areas immediately downstream.
7. Structural controls, including sediment ponds, sediment traps, and drainage diversions.
8. Haul roads and locations where vehicles enter or exit the site, and adjacent roadways for evidence of off–site sediment tracking.
9. Waterway crossings and areas adjacent to waterways and critical environmental features.
10. Concrete wash out areas and all areas requiring control measures for non–stormwater discharges, including dust, solid waste, de–watering, material spills, vehicle maintenance and washing, and wash water discharges.
11. Locations of all control measures that require maintenance, including any control measure identified in the previous swp3 inspection report which required maintenance or revision by the owner or primary operator.
12. Locations of any discharge of sediment or other pollutants from the site and any disturbance beyond the approved limits of construction.
13. Locations of control measures that failed to operate as designed or proved inadequate for a particular location.
14. Locations where an additional ESC or control measure is needed.

The SWP3 Inspection Report must include:

A. Findings as to whether the following structural and non–structural controls required for the site areas listed above are functioning: In compliance with the approved SWP3 and ESC plan:

1. Erosion source controls, including the approved sequence of construction and grading plan limits, drainage diversion measures, temporary and permanent fill disposal and stockpile management measures.
2. Sediment controls, including perimeter and interior controls, sediment traps and basins, and the sequence of construction requirements for the sediment controls.
3. Permanent erosion and soil stabilization controls, based on the sequence of construction and critical site improvements, and the cessation of construction activities, including temporary stabilization measures for areas inactive for longer than 14 days, and permanent stabilization measures for areas at final grade.
4. Other applicable controls and pollution prevention measures.

B. Rainfall Documentation:

1. For projects that comprise ten acres or more, the documentation must include rainfall dates and amounts in accordance with section 482.934(e); and
2. For projects that comprise less than ten acres, the documentation must include accurate rainfall data from a location closest to the site.

C. Corrective actions required for any non–compliant items and the schedule for bringing these items into compliance.

The SWP3 inspection report contents must contain the inspection findings for the required areas and control measures listed herein and certify whether the site is in compliance with the approved SWP3 and ESC plan. Either at the time of each SWP3 inspection, or no later than the date of the inspection, the Owners qualified inspector shall prepare and sign a SWP3 inspection report. The Owner or primary Operator shall upload each required SWP3 or ESC plan inspection report to the mypermitnow.org customer portal for Travis County. An alternate method of report submittal may be used if approved by the County inspector.

SEQUENCE OF CONSTRUCTION AND PRIORITY INSPECTIONS

The Owner and primary operator must follow this basic sequence of construction for each site development, inclusive of all non–residential site development projects. Within the following sequence of construction are listed Priority Inspections that the owner and primary operator must request from a representative of Travis County's Storm Water Management Program inspection team. Each Priority Inspection must be requested on–line through the mypermitnow.org customer portal for Travis County. The Priority Inspection in this exhibit are consistent with the priority inspection found in the customer portal for the project. For assurance purposes, a second request to Travis County is strongly encouraged by additionally sending an e–mail to env–inspection@traviscountytx.gov.

The sequence for items 1–4 and items 9–12 must not be altered, but the sequence for items 5–8 may be modified with the approval of the County.

1. ESC installation. Install all temporary erosion and sediment controls (ESC) and tree protection measures in accordance with the approved ESC plan sheets and the SWP3.
   a. Have a qualified Inspector (as specified in Section 482.934(C)(3) of the Travis County code) inspect the temporary erosion and sediment controls and prepare a certified SWP3 inspection report regarding whether the temporary erosion and sediment controls were installed in conformance with the approved plans;
   b. Upload the qualified inspector's certified SWP3 inspection report to the mypermitnow.org customer portal for Travis County; and
   c. Request a mandatory pre–construction meeting with Travis County through the mypermitnow.org customer portal for Travis County giving at least 3 business days notification.
2. Pre–construction meeting and ESC inspection. Hold a mandatory pre–construction meeting that addresses the items in exhibit 482.950 and the ESC pre–construction inspection by the county and obtain county's approval to start construction. (Priority Inspection).
3. Inspect for compliance with SWP3 and ESC plan. Maintain and inspect the SWP3 controls and prepare and upload a weekly certified SWP3 inspection report that includes the contents listed in exhibit 482.951 to the mypermitnow.org customer portal for Travis County.
4. Construct sediment basin(s). construct any storm water pond(s) first, whenever applicable, to be functional as construction sediment basin(s) before grading and excavating the entire site, as follows:
   a. Clear, grub, and excavate only the site areas and cut and fill quantities necessary to construct the pond(s) in accordance with these approved plans and the minimum standards described in the SWP3 and ESC plan sheet notes for the temporary sediment basin embankments, walls, inflows, outfalls, drainage conveyance measures, sediment controls, and stabilization.
   b. Request county inspection and obtain county's written approval of the temporary sediment basin(s) before proceeding further in the sequence of construction. (Priority Inspection).
5. Construct site improvements. Begin the primary site clearing, excavation, and construction activities and continue the SWP3 and ESC plan implementation and maintenance per the approved plans.
6. Construct driveway approach and right–of–way improvements. Install driveway approach and drainage and road improvements in the county right–of–way per approved plans, when applicable. Request a county pre–pour inspection of the driveway through the mypermitnow.org customer portal for Travis County giving at least 3 business days notification. (Priority Inspection).
7. Perform temporary stabilization in all disturbed areas that have ceased construction activities for 14 days or longer.
8. Perform permanent site stabilization / re–vegetation immediately in all site areas at final plan grade and in all site areas specified for phased re–vegetation.
9. Complete permanent water quality controls. begin completion of permanent water quality control(s) and install the underdrain per approved plans, when applicable.
   a. Remove construction sediment, re–establish the basin subgrade, and install underdrain piping.
   b. Request county inspection and obtain county's written approval of the underdrain piping installation and associated construction materials (aggregate, filter media, etc.) before covering the underdrain and proceeding with construction of the control. (Priority Inspection).
10. Complete construction site improvements and final stabilization per the approved plans.
11. Provide Engineer's concurrence letter through the mypermitnow.org customer portal for TCESD12 when construction is substantially complete and request a final inspection by TCESD12. (Priority Inspection).
12. Obtain a certificate of compliance when all final inspection punch list items, including final site stabilization and removal of temporary sediment controls. If necessary, provide a developers contract to the county to request conditional acceptance for use or occupancy of the site with all items completed except re–vegetation growth coverage. request a re–inspection when re–vegetation coverage is complete. (Priority Inspection)

FIRE DEPARTMENT TRAVIS COUNTRY EMERGENCY SERVICES DISTRICT No. 12 (TCESD No. 12) NOTES

1. The owner and/or developer shall be responsible for contacting Travis County ESD No. 12 to ensure compliance with all codes, ordinances, statutes and permitting requirements prior to construction.
2. Prior to beginning any construction, the appropriate Travis County ESD No. 12 permit/approval shall be obtained. The approved permit shall be readily available on site to Travis County ESD No. 12.
3. Phased occupancy shall be permitted only with prior approval from Travis County ESD No. 12, the building department, and other related agencies, as applicable. REQUESTS FOR PHASED OCCUPANCY SHALL BE MADE PRIOR TO START OF CONSTRUCTION ONLY.
4. Phased installation of fire access roads shall require an access phasing plan approved by Travis County ESD No. 12.
5. Phased construction of buildings shall require a construction phasing plan approved Travis County ESD No. 12.
6. An all–weather fire lane/fire apparatus access road shall be constructed to support the imposed load of a fire apparatus weighing 75,000 pounds.
7. The fire lane/fire apparatus access road shall provide fire department access to all parts of combustible structures within 150 feet of the fire lane. The approved fire lane/fire apparatus access road must be installed prior to and maintained during construction of any combustible structure, unless otherwise approved by Travis County ESD No. 12.
8. Where a fire hydrant is located on a fire lane/fire apparatus access road, the minimum road width shall be 26 feet, exclusive of shoulders. If no fire hydrant is provided, the minimum fire lane/fire apparatus access road width shall be 25 feet.
9. Fire lane width is measured from top face of curb to top face of curb for fire lanes with standard curbs and gutters and from flowline to flow–line for fire lanes with modified curb designs (e.g. rolled, ramped).
10. The developer is responsible to verify that all approved public works, street improvement and precise grading plans conform to the minimum street width requirements set forth by the fire code and adopted by Travis County ESD No. 12.
11. A minimum vertical clearance of 14' shall be provided for all fire lanes/fire apparatus access roads.
12. Inside turning radius of fire lanes/fire apparatus access roads shall be a minimum of 25 feet. The outside radius shall be 50 feet.
13. Dead–end fire lanes/fire apparatus access roads in excess of 150 feet shall be provided with approved turnaround per 2015 IFC Appendix D, Table D103.4.
14. The diameter of a cul–de–sac shall be 100 feet minimum per City of Manor specifications.
15. Access gates shall be approved by Travis County ESD No. 12 prior to installation.
16. All gates in construction fencing shall be equipped with a Knox or breakaway padlock.
17. If building exceeds 30 feet in height from grade plane, an aerial fire apparatus road, 15–30 feet parallel to one entire side of the building shall be in place. (2015 IFC, Appendix D105)
18. Fire lanes shall be marked with FIRE LANE – TOW AWAY ZONE. The curbs shall be painted red and the lettering shall be 4" in height and painted white. The stencil shall be placed at intervals of 35 feet.
19. The minimum required fire flow shall meet or exceed the requirements of Appendix B of the 2015 International Fire Code.
20. The maximum fire flow reduction for a project shall be based on the information provided in the fire flow reduction table provided in Travis County ESD No. 12 design documents.
21. All fire hydrants that are approved and installed as a part of the proposed project shall be part of a fire protection system.
22. The utility contractor shall consult Travis County ESD No. 12 regarding any requirements for utility contractors.
23. The appropriate individual shall consult with Travis County ESD No. 12 for requirements related to the underground water main line and subsequent installation of the water main/fire hydrant line.
24. The submission of an underground water line (utility) plan sheet with the site plan does not alleviate the need to have a separate underground plan submitted and approved by Travis County ESD No. 12. The approval of a site plan does not constitute the approval of an underground system.
25. Underground mains feeding hydrants shall be installed and tested in accordance with NFPA 24, the fire code and Travis County ESD No. 12 adopted amendments, by a contractor licensed to perform the installation. The entire main must be hydrostatically tested at one time unless isolation valves are provided between tested sections.
26. Travis County ESD No. 12 considers the piping from the point of connection at the municipal water supply to the fire hydrants and the base of any fire sprinkler riser part of a fire protection system.
27. The presence of domestic water supply taps off of the main water line or a shared supply line with fire sprinkler riser does not override any requirements of Travis County ESD No. 12 or NFPA 24. NFPA 24 shall apply to all underground installations and installations shall be permitted and inspected by Travis County ESD No. 12.
28. Fire hydrants shall meet the minimum standard of the City of Manor and Travis County ESD No. 12. (M511S–17A) and painted red.
29. The 4.5" fire hydrant outlet must face the fire lane.
30. The hydrants shall be installed with the center of the 4.5" opening at least 18" above finished grade.
31. Hydrants shall be placed within 100 feet of an FDC.
32. Hydrants shall be located so that a hose line running between the hydrant and the fire department connection(s) will not cross driveways, obstruct roads or fire lanes, or otherwise interfere with emergency vehicle response and evacuation of a site.
33. All fire hydrants shall have a "Blue Reflective Pavement Marker" indicating their location.
34. Hydrants shall be placed at no more than 500 feet apart, unless otherwise approved by Travis County ESD No. 12. (2015 IFC, Table C102.1)
35. Hydrants and fire department connections shall not be located behind a parking stalls or in other locations where they are likely to be blocked by vehicles or other objects. Whenever possible, hydrants shall be placed in landscape islands/peninsulas, street and drive aisle intersections in preference to mid–block locations.
36. Hydrants must be located within three to six feet of the edge of a fire access roadway.
37. Hydrants shall not be located in areas where they will be visually or operationally obstructed (behind fences or walls, in bushes, behind parking spaces, etc).
38. A minimum 3–foot clearance shall be provided around the circumference of the hydrant.
39. Approved fire hydrants are to be considered part of a fire protection system and shall not be removed or tampered with unless approved by Travis County ESD No. 12. Tampering shall include, but is not limited to, painting, modifying, and obstructing access.
40. Fire sprinkler riser rooms shall be provided with exterior access. No interior access shall be provided. The exterior access door shall face a designated fire lane, unless otherwise approved by Travis County ESD No. 12.
41. Any fire hydrants that have not passed an acceptance test in the presence of a Travis County ESD No. 12 inspector or temporarily inoperative should be wrapped with a black bag.
42. The building address shall be clearly visible from the street to which it is addressed. Final numbers have to be at least 6" in height and of contrasting color with the background upon which they are placed.
43. Temporary fuel tanks of 60 or more gallons shall be inspected by Travis County ESD No. 12 to ensure the appropriate requirements are met.
44. Prior to occupancy, a close out inspection test of fire hydrant flow is required by Travis County ESD No. 12. The contractor shall contact Travis County ESD No. 12 to schedule the acceptance test. If any hydrant fails the fire flow test, the entire system fails the fire flow test.
45 Approval of this plan submittal does not constitute a verification of all data, codes, information, and calculations supplied by the applicant. The licensed designer and/or professional engineer of record is solely responsible for the completeness, accuracy, and adequacy of the submittal whether or not the plan submittal is reviewed and approved for code compliance by Travis County Emergency Services District No. 12.

NO.	DATE	REVISIONS	APP.

WILBARGER CREEK M.U.D. No. 2
TRAVIS COUNTY, TEXAS

WASTEWATER TREATMENT PLANT EXPANSION TO 1.5 MGD

TRAVIS COUNTY CONSTRUCTION NOTES

QUIDDITY
Texas Board of Professional Engineers and Land Surveyors Reg. No. F-23290
912 South Capital of Texas Hwy, Suite 300 • Austin, TX 78746 • 512.441.9493

SCALE: NONE DGN. BY: JZYLBERBERG
DATE: FEBRUARY 2026 DWN. BY: SSOMERS
JOB NO. 0A651–0021–02 DWG. NO.
SUBMITTED: SURV. BY:
F.B. NO.

STATE OF TEXAS
JORDAN ZYLBERBERG
142350
LICENSED PROFESSIONAL ENGINEER
3/10/26

0–G–5
SHEET NO. 5 OF 230

C:\Users\JAS\DC\ACCDocs\Quiddity\0A651–0021–02 _ WILBARGER WWTP EXP. 1.5 MGD\Project Files\PLANS\MISCD.dwg, Feb 10, 2026 – 4:55pm, JAS

0 1 2 3 4 5 ORIGINAL SCALE IN INCHES FOR REDUCED PLANS

EQUIPMENT ABBREVIATIONS:

ABWF	AUTOMATIC BACKWASH SAND FILTER
AF	AIR INLET FILTER
AL	AIR LIFT
ASV	AUTOMATIC SWITCHOVER VALVE
BC	BELT CONVEYOR
BP	BELT PRESS
CC	CALIBRATION COLUMN
CFP	CENTRIFUGAL PUMP
CLR	CHLORINATOR
CP	CHOPPER PUMP
CRB	CARBON SCRUBBER
DA	DECANT ARM
DDP	DOUBLE DISC PUMP
DF	DISK FILTER
DP	DIAPHRAGM PUMP
DWT	DOUBLE WALL STORAGE TANK
EFAN	EXHAUST FAN
EWS	EMERGENCY EYEWASH & SHOWER
FBD	FINE BUBBLE DIFFUSER
FLT	FLOATS
GEN	GENERATOR
GIP	GAS INDUCTION PUMP
GLS	GAS LEAK SENSOR
GR	GRINDER
HEP	HORIZONTAL END-SUCTION PUMP
HST	HOIST
INJ	INJECTOR
JIB	JIBB CRANE
LC	LOAD CELL
LCP	LOCAL CONTROL PANEL
LVR	LOUVER
MCS	MECHANICAL COARSE SCREEN
MFS	MECHANICAL FINE SCREEN
MR	MONORAIL
MS	MANUAL SCREEN
MSB	MULTI-STAGE CENTRIFUGAL BLOWER
MXR	MIXER
PBU	POLYMER BLENDING UNIT
PCP	PROGRESSIVE CAVITY PUMP
PD	PULSATION DAMPENER
PSP	PERISTALTIC PUMP
RCTW	RECTANGULAR WEIR
RDT	ROTARY DRUM THICKENER
RLB	ROTARY LOBE BLOWER
RLP	ROTARY LOBE PUMP
RSB	ROTARY SCREW BLOWER
RTB	REGENERATIVE TURBINE BLOWER
RTM	ROTAMETER
RTV	ROTAMETER WITH INTEGRAL MANUAL VALVE
SC	SECONDARY CLARIFIER
SCC	SCREW CONVEYOR
SCP	SUBMERSIBLE CHOPPER PUMP
SDD	COARSE BUBBLE SINGLE DROP DIFFUSER
SFAN	SUPPLY FAN
SFR	SULFONATOR
SHTR	SPACE HEATER
SM	SUBMERSIBLE MIXER
SNP	SOLENOID PUMP
SP	NON-CLOG SUBMERSIBLE PUMP
SPP	SELF-PRIMING CENTRIFUGAL PUMP
STMX	STATIC MIXER
SWT	SINGLE WALL STORAGE TANK
TB	TRAVELING BRIDGE
TBB	TURBO BLOWER
TEFC	TOTALLY ENCLOSED, FAN-COOLED MOTOR
TLY	TROLLEY
VLF	VACUUM LIQUID FEEDER
VMP	VERTICAL MULTI-STAGE CENTRIFUGAL PUMP
VNW	V-NOTCH WEIR
VR	VACUUM REGULATOR
WBD	COARSE BUBBLE WIDE BAND DIFFUSER
WC	WASHER COMPACTOR
WCH	WINCH

FLUID ABBREVIATIONS:

AIR	AIR
ALUM	ALUM
BW	BACKWASH WASTE
CAKE	DEWATERED SLUDGE
CE	CLARIFIED EFFLUENT
CLG	CHLORINE GAS
CLS	CHLORINE SOLUTION
DR	DRAIN LINE
DS	DIGESTED SLUDGE
FA	FOUL AIR
FE	FINAL EFFLUENT
FRA	FRESH AIR
FTE	FILTERED EFFLUENT
FTR	FILTRATE
IR	INTERNAL RECYCLE
ML	MIXED LIQUOR
NPW	NON-POTABLE WATER
OF	OVERFLOW
POLY	POLYMER
PRM	PERMEATE
PS	POLYMER SOLUTION
PW	POTABLE WATER
RAS	RETURN ACTIVATED SLUDGE
RCW	RECLAIMED WATER
RS	RAW SEWAGE
SBS	SODIUM BISULFITE
SCUM	SCUM
SDS	SULFUR DIOXIDE SOLUTION
SHS	SODIUM HYPOCHLORITE (BLEACH)
SI	SCREENED INFLUENT
SN	SUPERNATE
SDG	SULFUR DIOXIDE GAS
STM	STORM SEWER
TS	THICKENED SLUDGE
WAS	WASTE ACTIVATED SLUDGE

GENERAL ABBREVIATIONS:

AC	ACRES
CL	CENTERLINE
CFM	CUBIC FEET PER MINUTE
EL	ELEVATION
FF	FINISHED FLOOR
FM	FORCE MAIN
FPS	FEET PER SECOND
FT	FEET
GAL	GALLONS
GPD	GALLONS PER DAY
GPH	GALLONS PER HOUR
GPM	GALLONS PER MINUTE
HOA	HAND OFF AUTO
HP	HORSE POWER
HR	HOUR
LF	LINEAR FEET
mA	MILLIAMP
MH	MANHOLE
OFB	OVERFLOW BAFFLE
PP	POWER POLE
ROW	RIGHT-OF-WAY
SMC	SAMPLE COCK
SAN	SANITARY SEWER
SCH	SCHEDULE
SF	SQUARE FEET
TDH	TOTAL DYNAMIC HEAD
TOB	TOP OF BANK
TOC	TOP OF CONCRETE
TOE	TOE OF SLOPE
TOS	TOP OF SLAB
TOW	TOP OF WALL
TPD	TELEPHONE PEDESTAL
TSP	TELEPHONE SERVICE POLE
TSS	TOTAL SUSPENDED SOLIDS
UFB	UNDERFLOW BAFFLE
UGE	UNDERGROUND ELECTRIC
V	VOLTS
VOL	VOLUME
WM	WATER METER

GATES, VALVES & FITTINGS ABBREVIATIONS:

3WV	THREE WAY VALVE
ARV	AIR RELEASE VALVE
AVV	AIR & VACUUM VALVE
BCV	BALL CHECK VALVE
BF	BLIND FLANGE
BFV	BUTTERFLY VALVE
BPV	BACKPRESSURE VALVE
BS	BASKET STRAINER
BV	BALL VALVE
CCV	CUSHION CHECK VALVE
DAE	DOUBLE ARCH EXPANSION JOINT
DBS	DUPLEX BASKET STRAINER
DBV	DUCKBILL VALVE
DCV	DOUBLE DISC CHECK VALVE
DDC	DOUBLE DETECTOR CHECK
DGV	DEGASSING VALVE
DJ	DISMANTLING JOINT
DV	DIAPHRAGM VALVE
EC	EXPANSION COUPLING
FAC	FLANGED ADAPTER COUPLING
FPG	FLAP GATE
FPV	FLAP VALVE
FTV	FOOT VALVE
GLB	GLOBE VALVE
GV	GATE VALVE
HB	HOSE BIBB
KGV	KNIFE GATE VALVE
MC	MECHANICAL COUPLING
MQC	MALE CAM & GROOVE QUICK COUPLING
MV	MUD VALVE
NRS	NON-RISING STEM
NV	NEEDLE VALVE
OCV	ODOR CONTROL VALVE
OSY	OUTSIDE STEM & YOKE
PG	PULL GATE
PNV	PINCH VALVE
PR	PRESSURE REDUCING VALVE
PRV	PRESSURE RELIEF VALVE
PSV	PRESSURE SUSTAINING VALVE
PV	PLUG VALVE
RPZ	REDUCED PRESSURE ZONE BACKFLOW PREVENTER
SCK	SILENT CHECK VALVE
SCV	SWING CHECK VALVE
SG	SLIDE GATE
SLC	SLEEVE COUPLING
SRV	SURGE RELIEF VALVE
SV	SOLENOID VALVE
TBA	TUBING ADAPTER
TV	TELESCOPIC VALVE
UN	UNION
VB	VACUUM BREAKER
WG	WEIR GATE
WYS	WYE STRAINER

MATERIAL ABBREVIATIONS:

AL	ALUMINUM
CFRP	CENTRIFUGALLY CAST FIBER REINFORCED PIPE
CMP	CORRUGATED METAL PIPE
DI	DUCTILE IRON
FRP	FIBERGLASS REINFORCED PLASTIC
GS	GALVANIZED STEEL
HDG	HOT DIP GALVANIZED
HDPE	HIGH DENSITY POLYETHYLENE
PE	POLYETHYLENE
PVC	POLYVINYL CHLORIDE
RC	REINFORCED CONCRETE
SS	STAINLESS STEEL
ST	STEEL
WS	WELDED STEEL

INSTRUMENTATION ABBREVIATIONS:

A/H	AUTO/HAND
DC	FULL VOLTAGE DISCONNECT
DOP	DOPPLER FLOW METER
ES	EMERGENCY STOP
H/O/A	HAND/OFF/AUTO
H/O/R	HAND/OFF/REMOTE
L/A	LOCAL/AUTO
L/C	LOCAL/COMPUTER
L/O/C	LOCAL/OFF/COMPUTER
L/O/R	LOCAL/OFF/REMOTE
L/R	LOCAL/REMOTE
LS	LOCK STOP
LSR	LASER LEVEL TRANSDUCER
MAG	ELECTROMAGNETIC FLOWMETER
N/B	NORMAL/BYPASS
O/O	ON/OFF
O/C	OPEN/CLOSE
O/C/LOS	OPEN/CLOSE/LOCK-OUT-STOP
O/C/S	OPEN/CLOSE/STOP
O/C/S/C	OPEN/CLOSE/STOP/COMPUTER
O/H/C	OPEN/HOLD/CLOSE
O/O/A	ON/OFF/AUTO
O/O/C	ON/OFF/COMPUTER
PRP	PROPELLER OR TURBINE FLOWMETER
RAD	RADAR LEVEL TRANSDUCER
R/S/L	RAISE/STOP/LOWER
S/S	STOP/START
SUB	SUBMERSIBLE LEVEL TRANSDUCER
TRM	THERMAL MASS FLOWMETER
TRT	TRANSIT TIME FLOWMETER
ULT	ULTRASONIC LEVEL TRANSDUCER

ANALYZER ABBREVIATIONS:

DO	DISSOLVED OXYGEN
NO3	NITRATE
OP	ORTHOPHOSPHATE
ORP	OXIDATION REDUCTION POTENTIAL
TSS	TOTAL SUSPENDED SOLIDS
TURB	TURBIDITY

EQUIPMENT LABELS:

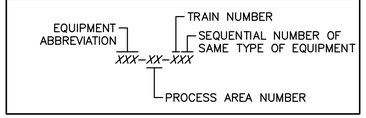

VALVE LABELS:

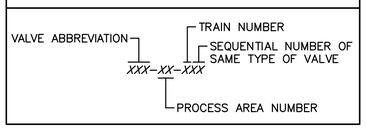

PIPING LABELS:

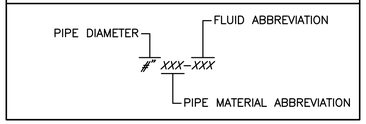

PROCESS AREAS:

0	GENERAL / CIVIL	8	CHLORINE CONTACT BASIN
2	LIFT STATION	9	BLOWERS
3	ELEVATED HEADWORKS	10	NPW SYSTEM
4	PEAK SHAVING BASIN	11	CHEMICAL FEED SYSTEMS
5	AERATION BASIN No. 3	12	ELECTRICAL BUILDING
6	CLARIFIER No. 3	13	SLUDGE HOLDING TANK
7	TERTIARY FILTERS	14	DEWATERING FACILITY AND PRESS FEED PUMPS
		15	RECLAIMED WATER STORAGE STATION

DEVICE IDENTIFICATION LEGEND

FIRST LETTER			SUCCEEDING LETTERS		
MEASURED OR INITIATING VARIABLE		MODIFIER	READOUT OR PASSIVE FUNCTION	OUTPUT FUNCTION	MODIFIER
A	ANALYSIS		ALARM		
B	BURNER, COMBUSTION				
C	CONDUCTIVITY			CONTROL	CLOSED
D	DENSITY	DIFFERENTIAL			
E	VOLTAGE		PRIMARY ELEMENT		
F	FLOW RATE	RATIO (FRACTION)			
G	GAUGE		GLASS, VIEWING DEVICE		
H	HAND (MANUAL)				HIGH
I	CURRENT (ELECTRICAL)		INDICATE		
J	POWER	SCAN			
K	TIME, TIME SCHED.	TIME RATE OF CHANGE		CONTROL STATION	
L	LEVEL		LIGHT		LOW
M	MOTION	MOMENTARY			MIDDLE
N	INTRUSION				NORMAL
O	TORQUE		ORIFICE, RESTRICTION		OPENED
P	PRESSURE, VACUUM		POINT CONNECTION		
Q	QUANTITY	INTEGRATE, TOTALIZE			
R	RADIATION		RECORD OR PRINT		
S	SPEED, FREQUENCY	SAFETY		SWITCH	
T	TEMPERATURE			TRANSMIT	
U	MULTIVARIABLE		MULTIFUNCTION	MULTIFUNCTION	MULTIFUNCTION
V	VIBRATION			VALVE, LOUVER	
W	WEIGHT, FORCE		WELL		
X	UNCLASSIFIED	X-AXIS	UNCLASSIFIED	UNCLASSIFIED	UNCLASSIFIED
Y	EVENT, STATE OF PRESENCE	Y-AXIS		RELAY, COMPUTE CONVERT	
Z	POSITION	Z-AXIS		DRIVER, ACTUATOR, FINAL CONTROL ELEMENT	

GENERAL INSTRUMENT & FUNCTION SYMBOLS

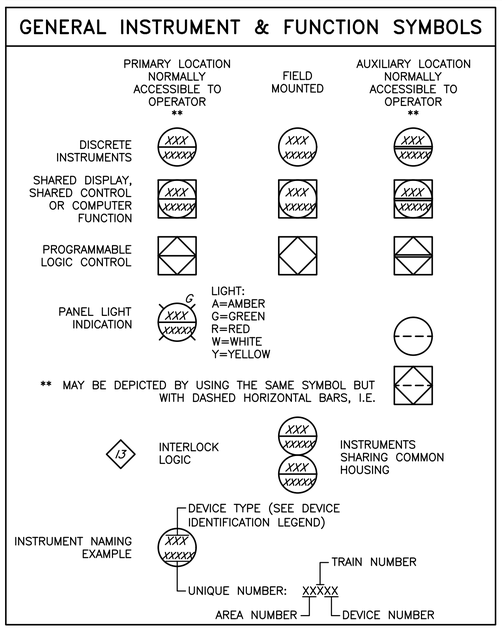

NO.	DATE	REVISIONS	APP.

WILBARGER CREEK M.U.D. No. 2
TRAVIS COUNTY, TEXAS

WASTEWATER TREATMENT PLANT EXPANSION TO 1.5 MGD

GENERAL ABBREVIATIONS

QUIDDITY
Texas Board of Professional Engineers and Land Surveyors Reg. No. F-23290
912 South Capital of Texas Hwy, Suite 300 • Austin, TX 78746 • 512.441.9493

SCALE:	NONE	DGN. BY:	JZYLBERBERG
DATE:	JUNE 2026	DWN. BY:	SSOMERS
JOB NO.	0A651-0021-02	DWG. NO.	
SUBMITTED:		SURV. BY:	
		F.B. NO.	

STATE OF TEXAS
JORDAN ZYLBERBERG
142350
LICENSED PROFESSIONAL ENGINEER
7/2/26

0-G-6
SHEET NO. 6 OF 230

C:\Users\JAS\DC\ACCDocs\Quiddity\0A651-0021-02 _ WILBARGER WWTP EXP. 1.5 MGD\Project Files\PLANS\MISCD.dwg, Jun 23, 2026 - 2:08pm, JAS

0 1 2 3 4 5 ORIGINAL SCALE IN INCHES FOR REDUCED PLANS

MISCELLANEOUS SYMBOLS

- TYPICAL NORMALLY CLOSED VALVE
- PLUG VALVE
- BALL VALVE
- BUTTERFLY VALVE
- SILENT CHECK VALVE
- SWING CHECK VALVE
- CUSHION CHECK VALVE
- BALL CHECK VALVE
- MUD VALVE
- DUCKBILL VALVE
- DIAPHRAGM VALVE
- GATE VALVE
- DOUBLE DISC CHECK VALVE
- GLOBE VALVE
- ODOR CONTROL VALVE
- PINCH VALVE
- NEEDLE VALVE
- THREE–WAY VALVE
- FLAP VALVE
- TELESCOPIC VALVE
- FOOT VALVE
- AIR & VACUUM VALVE
- AIR RELEASE VALVE
- DEGASSING VALVE
- SOLENOID VALVE
- PRESSURE RELIEF VALVE
- SURGE RELIEF VALVE
- PRESSURE REDUCING VALVE
- PRESSURE SUSTAINING VALVE
- BACKPRESSURE VALVE
- AUTOMATIC SWITCHOVER VALVE
- VACUUM REGULATOR
- DRAIN LINE
- DRAIN INLET (SCREENED)
- DRAIN INLET (OPEN)
- VENT
- AIR INLET FILTER
- SLIDE GATE (NORMALLY OPEN)
- SLIDE GATE (NORMALLY CLOSED)
- PULL GATE (NORMALLY OPEN)
- PULL GATE (NORMALLY CLOSED)
- WEIR GATE
- OVERFLOW BAFFLE
- UNDERFLOW BAFFLE
- V–NOTCH WEIR
- RECTANGULAR WEIR
- TUBING ADAPTER
- BLIND FLANGE
- UNION
- SLEEVE COUPLING
- FLANGED ADAPTER COUPLING
- DISMANTLING JOINT
- DOUBLE ARCH EXPANSION JOINT
- AIR LIFT
- MALE CAM & GROOVE QUICK COUPLING
- DIAPHRAGM SEAL
- INLINE ANNULAR DIAPHRAGM
- SAMPLE COCK
- HOSE BIBB
- VACUUM BREAKER
- WYE STRAINER
- CORPORATION STOP
- GENERAL BACKFLOW PREVENTER
- BASKET STRAINER
- DUPLEX BASKET STRAINER
- EMERGENCY EYE WASH & SHOWER
- BLADDER TANK
- MIXER
- STATIC MIXER
- SINGLE WALL STORAGE TANK
- DOUBLE WALL STORAGE TANK
- STORAGE CONTAINER
- EXHAUST FAN
- LOUVER
- GENERAL FAN
- GENERAL CRANE
- WINCH
- TRAVELING BRIDGE CRANE
- TROLLEY
- HOIST
- GENERAL SCREEN
- WASHER COMPACTOR
- SCREW CONVEYOR
- BELT CONVEYOR
- COARSE BUBBLE SINGLE DROP DIFFUSER (PROFILE)
- SINGLE DROP COARSE AIR DIFFUSER (PLAN)
- FINE BUBBLE DIFFUSERS
- COARSE BUBBLE WIDE BAND AIR DIFFUSERS (PLAN)
- COARSE BUBBLE AIR
- FINE BUBBLE AIR
- MANHOLE
- GRINDER
- GENERAL BLOWER
- GENERAL PUMP
- HEAT TRACING
- CALIBRATION TUBE/COLUMN
- GAS INDUCTION PUMP
- INJECTOR
- ROTAMETER
- ROTAMETER WITH INTEGRAL MANUAL VALVE
- PULSATION DAMPENER
- CHEMICAL DOSAGE CONTROLLER (SEE FLUID ABBREVIATIONS)

ELECTRICAL/ INSTRUMENTATION SYMBOLS

- 120 VAC ELECTRICAL SUPPLY
- LEVEL TRANSDUCER (SEE INSTRUMENTATION ABBREVIATIONS FOR TYPE)
- FLOAT WITH PVC COATED WEIGHT
- FLOW METER (SEE INSTRUMENTATION ABBREVIATIONS FOR TYPE)
- ONLINE ANALYZER (SEE ANALYZER ABBREVIATIONS FOR TYPE)
- PROBE ANALYZER (SEE ANALYZER ABBREVIATIONS FOR TYPE)
- LOAD CELL/SCALE
- SPACE HEATER
- MOTOR
- VARIABLE SPEED MOTOR
- MOTOR WITH LOCAL LOCKOUT (SEE INSTRUMENTATION ABBREVIATIONS FOR TYPE)
- ELECTRICAL SIGNAL
- 3–PHASE POWER
- DATA COMMUNICATION
- HEAT TRACING
- ANALOG INPUT
- ANALOG OUTPUT
- DISCRETE INPUT
- DISCRETE OUTPUT

GENERAL LEGEND

FUTURE	EXISTING	PROPOSED	
			PROPERTY LINE
			EASEMENT LINE
			BUILDING LINE
OHP	OHP	OHP	OVERHEAD POWER LINE
GAS	GAS	GAS	GAS LINE
			TYP PIPE FITTING (VERTICAL)
			TYP PIPE FITTING (HORIZ)
			TYPICAL PIPE VALVE
			CONCRETE PIPE SUPPORT
			MANHOLE
			UNDERGROUND PLANT PIPING
			ABOVEGROUND PLANT PIPING
	FP		EDGE OF EXISTING FLOODPLAIN
			EDGE OF BUFFERZONE
			EDGE OF PAVEMENT
			TOP OF BANK
			TOE OF SLOPE
			DRAINAGE SWALE
			CONCRETE FENCE
			CHAIN LINK FENCE
			WOODEN FENCE
			BARBED WIRE FENCE
			BRICK FENCE
100.0	100.0	125	NATURAL GROUND CONTOUR
			CONCRETE PAVEMENT
			CRUSHED CONCRETE PAVEMENT
			ASPHALT PAVEMENT
107.5	107.5	108.0	GRADE ELEVATION
			SLOPE TO DRAIN
		CJ	SAW–CUT CONTROL JOINT
		EJ	EXPANSION JOINT
		IJ	ISOLATION JOINT
		KJ	KEYED CONSTRUCTION JOINT
			SOIL BORING (SEE GEOTECHNICAL REPORT)
			EXISTING ITEM TO BE DEMOLISHED
			EXISTING ITEM TO BE ABANDONED

NO.	DATE	REVISIONS	APP.

WILBARGER CREEK M.U.D. No. 2
TRAVIS COUNTY, TEXAS

WASTEWATER TREATMENT PLANT EXPANSION TO 1.5 MGD

GENERAL SYMBOLS

QUIDDITY
Texas Board of Professional Engineers and Land Surveyors Reg. No. F-23290
912 South Capital of Texas Hwy, Suite 300 • Austin, TX 78746 • 512.441.9493

SCALE: NONE DGN. BY: JZYLBERBERG
DATE: FEBRUARY 2026 DWN. BY: SSOMERS
JOB NO. 0A651–0021–02 DWG. NO.
SUBMITTED: SURV. BY:
F.B. NO.

STATE OF TEXAS
JORDAN ZYLBERBERG
142350
LICENSED PROFESSIONAL ENGINEER
3/10/26

0–G–7
SHEET NO. 7 OF 230

C:\Users\JAS\DC\ACCDocs\Quiddity\0A651–0021–02 _ WILBARGER WWTP EXP. 1.5 MGD\Project Files\PLANS\MISCD.dwg, Feb 10, 2026 – 4:55pm, JAS

0 1 2 3 4 5 ORIGINAL SCALE IN INCHES FOR REDUCED PLANS

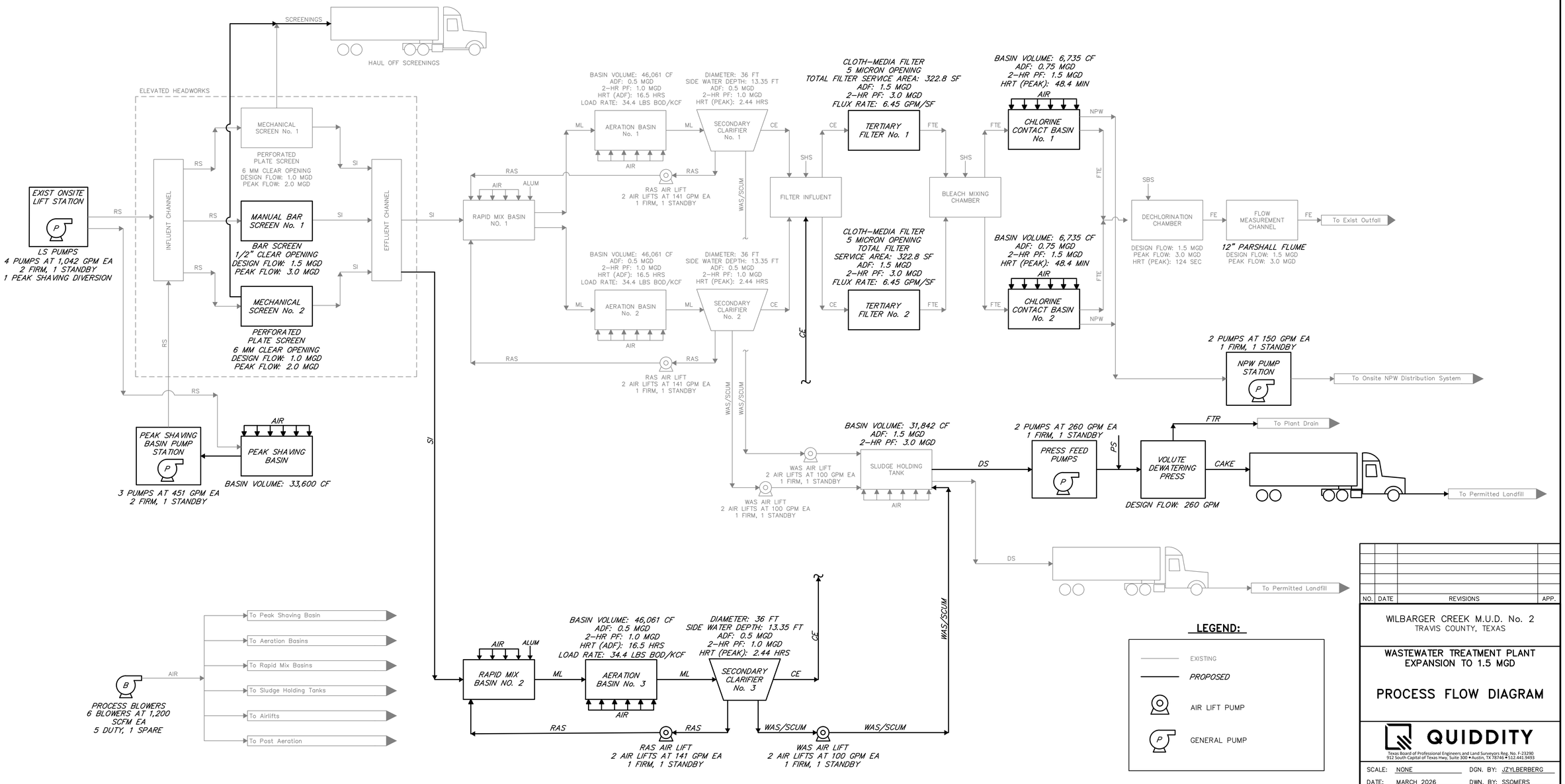

PROCESS FLOW DIAGRAM

NOT TO SCALE

NO.	DATE	REVISIONS	APP.

WILBARGER CREEK M.U.D. No. 2
TRAVIS COUNTY, TEXAS

WASTEWATER TREATMENT PLANT EXPANSION TO 1.5 MGD

PROCESS FLOW DIAGRAM

QUIDDITY
Texas Board of Professional Engineers and Land Surveyors Reg. No. F-23290
912 South Capital of Texas Hwy, Suite 300 • Austin, TX 78746 • 512.441.9493

SCALE: NONE
DATE: MARCH 2026
JOB NO. 0A651-0021-02
SUBMITTED:
DGN. BY: JZYLBERBERG
DWN. BY: SSOMERS
DWG. NO.
SURV. BY:
F.B. NO.

STATE OF TEXAS
JORDAN ZYLBERBERG
142350
LICENSED PROFESSIONAL ENGINEER
3/10/26

0-G-8
SHEET NO. 8 OF 230

C:\Users\jnoldin\DC\ACCDocs\Quiddity – Water–\0A651-0021-02 _ WILBARGER WWTP EXP. 1.5 MGD\Project Files\PLANS\MISCD.dwg, Mar 09, 2026 – 11:36am, jnoldin

ORIGINAL SCALE IN INCHES FOR REDUCED PLANS

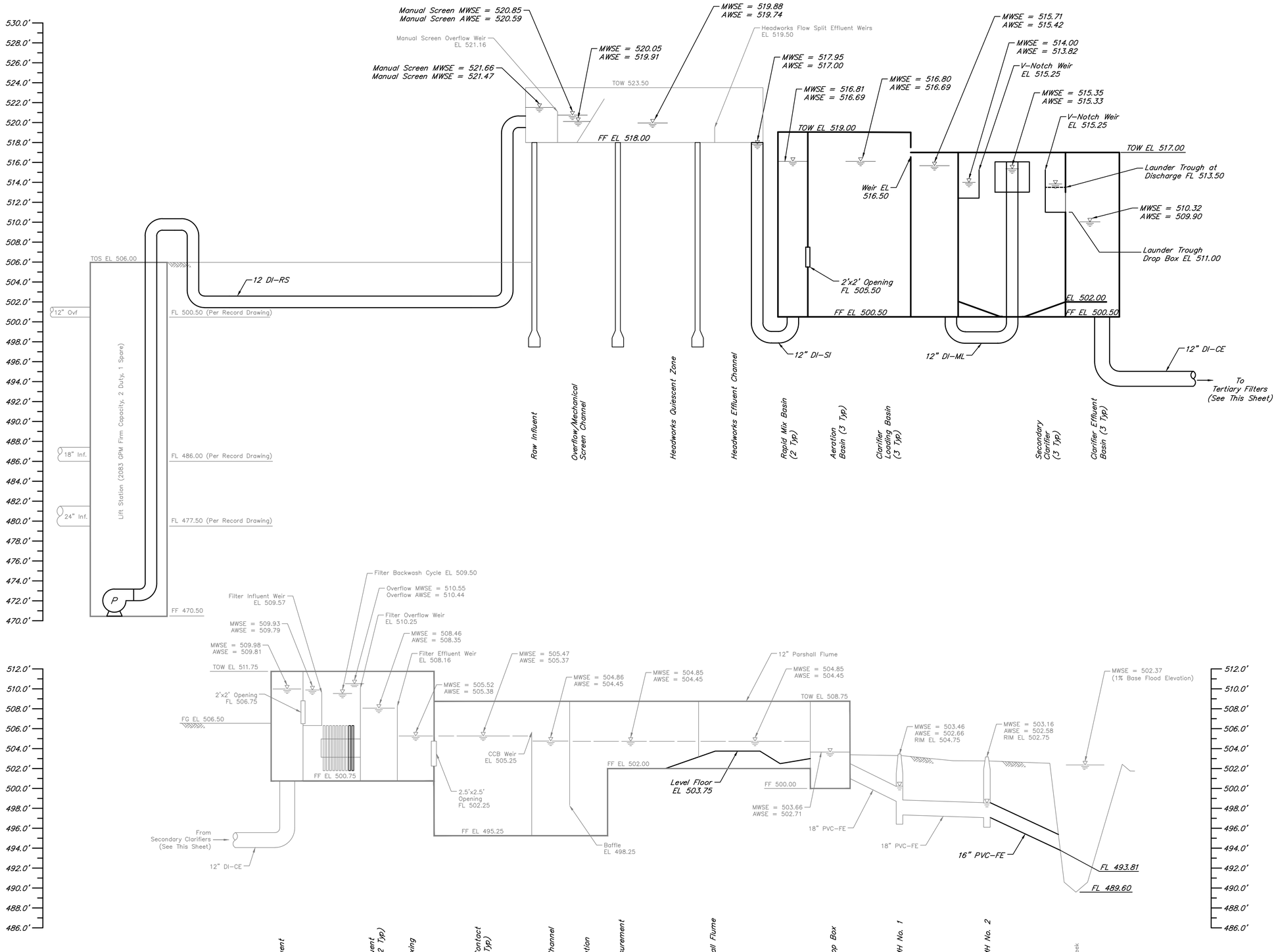

NO.	DATE	REVISIONS	APP.

WILBARGER CREEK M.U.D. No. 2
TRAVIS COUNTY, TEXAS

WASTEWATER TREATMENT PLANT
EXPANSION TO 1.5 MGD

HYDRAULIC PROFILE

QUIDDITY
Texas Board of Professional Engineers and Land Surveyors Reg. No. F-23290
912 South Capital of Texas Hwy, Suite 300 • Austin, TX 78746 • 512.441.9493

SCALE: NONE
DATE: FEBRUARY 2026
JOB NO. 0A651-0021-02
SUBMITTED:

DGN. BY: JZYLBERBERG
DWN. BY: SSOMERS
DWG. NO.
SURV. BY:
F.B. NO.

STATE OF TEXAS
JORDAN ZYLBERBERG
142350
LICENSED PROFESSIONAL ENGINEER
3/10/26

0-G-9
SHEET NO. 9 OF 230

C:\Users\JAS\DC\ACCDocs\Quiddity\0A651-0021-02 _ WILBARGER WWTP EXP. 1.5 MGD\Project Files\PLANS\MISCD.dwg, Feb 13, 2026 – 8:50am, JAS

0 1 2 3 4 5 ORIGINAL SCALE IN INCHES FOR REDUCED PLANS

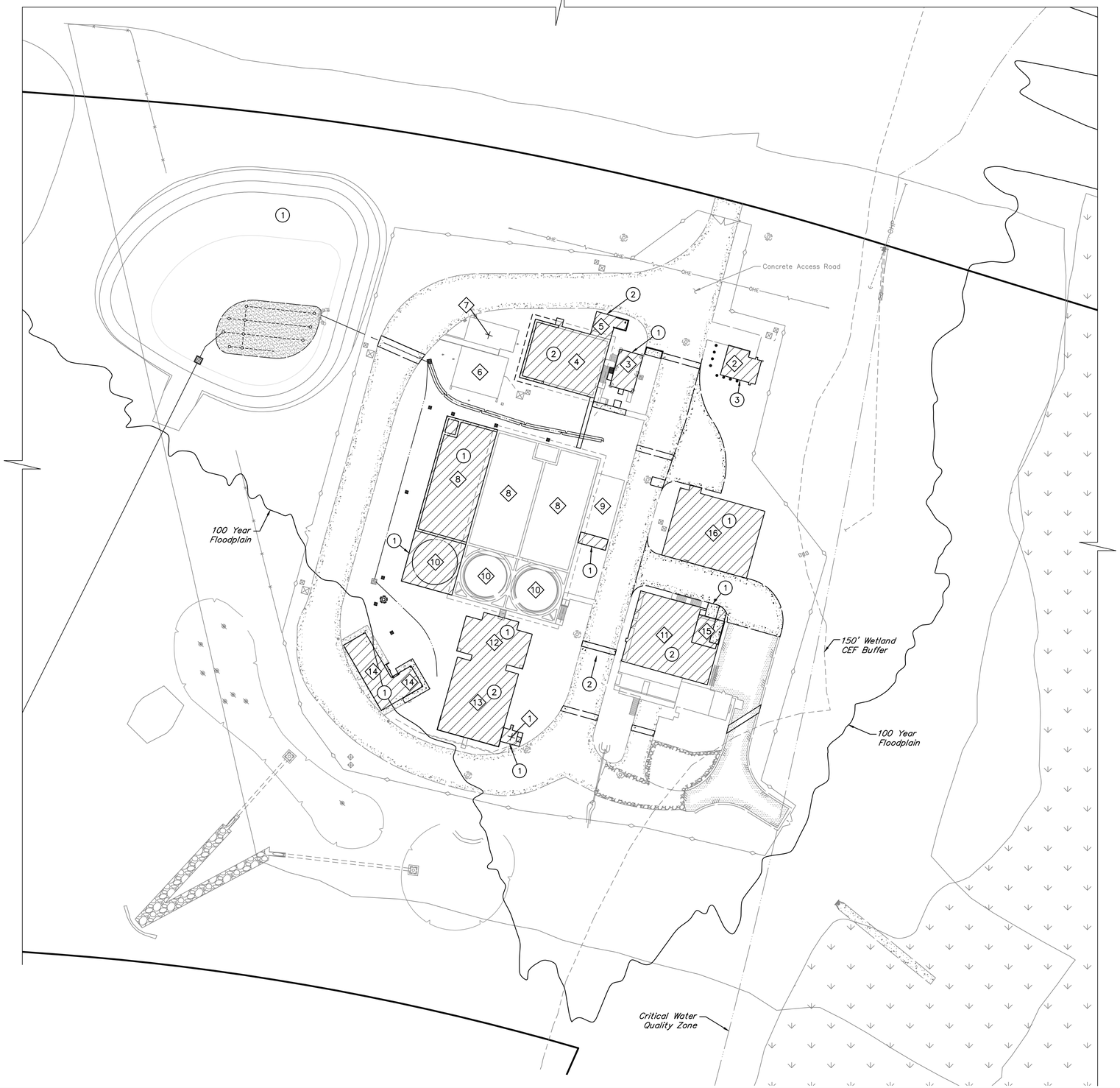

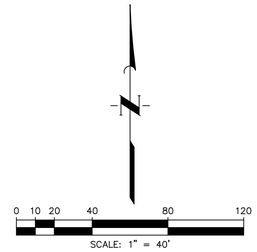

No.	DESCRIPTION		
1	NPW PUMP STATION	9	BLOWERS
2	LIFT STATION	10	CLARIFIERS
3	HEADWORKS	11	SLUDGE HOLDING TANKS
4	PEAK SHAVING BASIN	12	TERTIARY FILTERS
5	PEAK SHAVING BASIN PUMP STATION	13	CHLORINE CONTACT BASIN
6	ELECTRICAL BUILDING	14	CHEMICAL STORAGE AREA
7	GENERATOR	15	PRESS FEED PUMPS
8	AERATION BASINS	16	DEWATERING FACILITY

OBJECTIVE: Contractor shall construct, rehabilitate, expand, and/or improve the following at the Wilbarger Creek Municipal Utility District No. 2 WWTP. The WWTP shall remain in service except for scheduled shutdowns as outlined in the mechanical and electrical sheets. **The construction items outlined are not all inclusive; all items in these plans shall be constructed. This sheet is intended to outline a general order of minimum acceptability to ensure the facility remains operations during these improvements.**

(1) PHASE 1
- Exist Headworks Expansion
- Aeration Basin No. 3
- Clarifier No. 3
- Exist Blowers Expansion
- NPW Pump Station
- Exist Chemical Storage Area Expansion
- WAS Airlifts
- Exist Tertiary Filters Expansion
- Dewatering Facility
- Press Feed Pumps

(2) PHASE 2
- Exist Peak Shaving Basin Expansion
- Exist Peak Shaving Basin Pump Station Expansion
- Exist Chlorine Contact Basin Improvements
- Exist Sludge Holding Tank Improvements

(3) PHASE 3
- Exist On-Site Lift Station Expansion and Force Main Improvements

NOTES:

1. All items of work listed above are the minimum suggested sequence for construction. Contractor may propose alternate sequence plan for consideration by engineer.
2. See Mechanical Sheets for minimum service/performance/shutdown requirements for individual process areas.
3. In order to complete each phase, and prior to moving on to next phase, all facilities shall be constructed and equipment shall be ready to be placed into service.

NO.	DATE	REVISIONS	APP.

WILBARGER CREEK M.U.D. No. 2
TRAVIS COUNTY, TEXAS

WASTEWATER TREATMENT PLANT EXPANSION TO 1.5 MGD

CONSTRUCTION SEQUENCING PLAN

QUIDDITY
Texas Board of Professional Engineers and Land Surveyors Reg. No. F-23290
912 South Capital of Texas Hwy, Suite 300 • Austin, TX 78746 • 512.441.9493

SCALE:	1"=40'	DGN. BY:	JCP
DATE:	FEBRUARY 2026	DWN. BY:	JSTRUHAR
JOB NO.	0A651-0021-02	DWG. NO.	
SUBMITTED:		SURV. BY:	
		F.B. NO.	

STATE OF TEXAS
JORDAN ZYLBERBERG
142350
LICENSED PROFESSIONAL ENGINEER
3/10/26

0-G-10
SHEET NO. 10 OF 230

C:\Users\JAS\DC\ACCDocs\Quiddity\0A651-0021-02 _ WILBARGER WWTP EXP. 1.5 MGD\Project Files\PLANS\CIVIL SITE.dwg, Feb 17, 2026 - 4:31pm, JAS

0 1 2 3 4 5

ORIGINAL SCALE IN INCHES FOR REDUCED PLANS

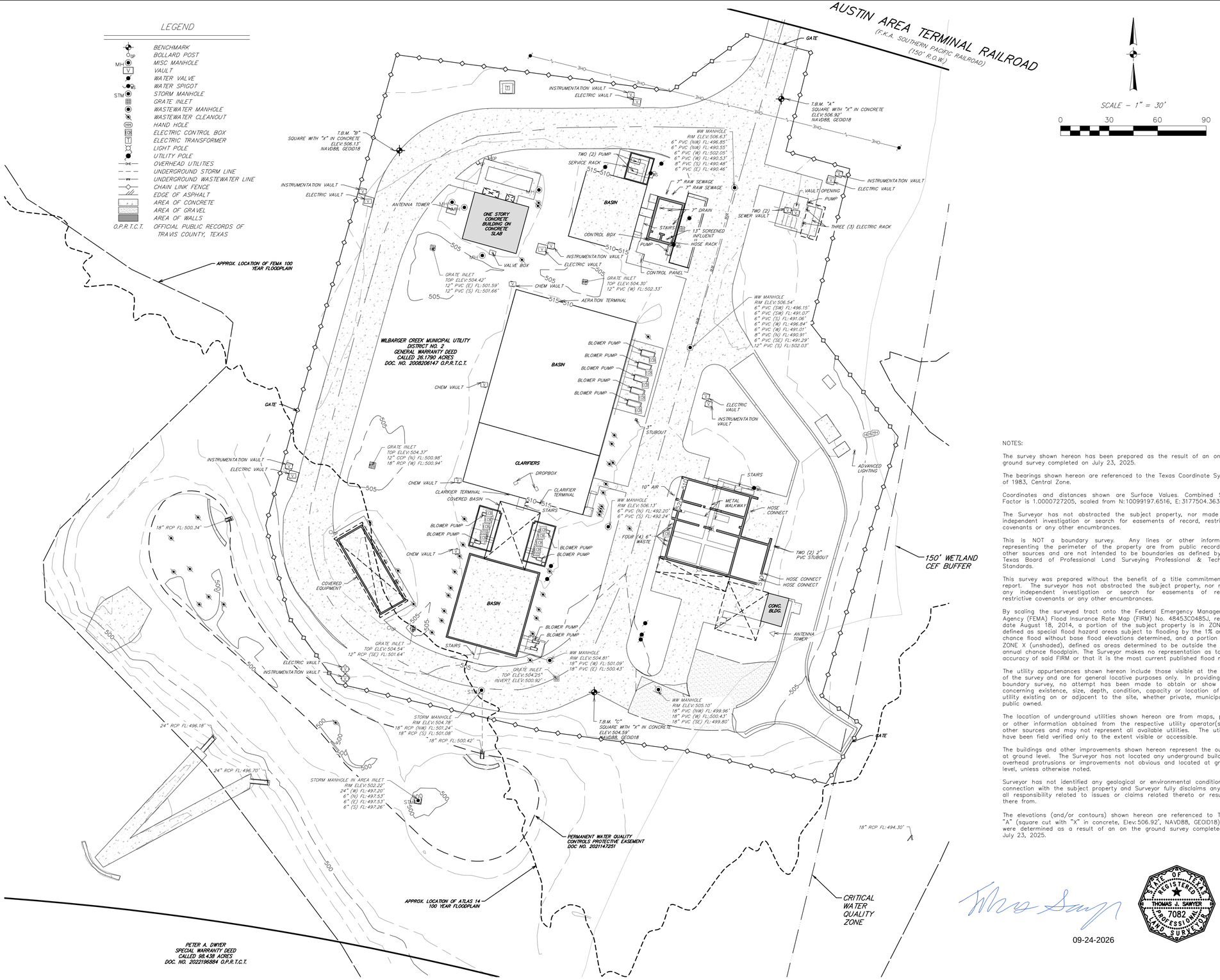

SCALE – 1" = 30'

0 30 60 90

T.B.M. "A"

SQUARE WITH "X" IN CONCRETE AT NORTHEAST OF WASTEWATER TREATMENT PLANT SITE.

ELEVATION = 506.92' (NAVD88, GEOID18)

T.B.M. "B"

SQUARE WITH "X" IN CONCRETE AT NORTHWEST OF WASTEWATER TREATMENT PLANT SITE.

ELEVATION = 506.13' (NAVD88, GEOID18)

T.B.M. "C"

SQUARE WITH "X" IN CONCRETE AT SOUTH SIDE OF THE WASTEWATER TREATMENT PLANT SITE.

ELEVATION = 504.59' (NAVD88, GEOID18)

NOTES:

The survey shown hereon has been prepared as the result of an on the ground survey completed on July 23, 2025.

The bearings shown hereon are referenced to the Texas Coordinate System of 1983, Central Zone.

Coordinates and distances shown are Surface Values. Combined Scale Factor is 1.0000727205, scaled from N:10099197.6516, E:3177504.3630.

The Surveyor has not abstracted the subject property, nor made any independent investigation or search for easements of record, restrictive covenants or any other encumbrances.

This is NOT a boundary survey. Any lines or other information representing the perimeter of the property are from public records or other sources and are not intended to be boundaries as defined by the Texas Board of Professional Land Surveying Professional & Technical Standards.

This survey was prepared without the benefit of a title commitment or report. The surveyor has not abstracted the subject property, nor made any independent investigation or search for easements of record, restrictive covenants or any other encumbrances.

By scaling the surveyed tract onto the Federal Emergency Management Agency (FEMA) Flood Insurance Rate Map (FIRM) No. 48453C0485J, revised date August 18, 2014, a portion of the subject property is in ZONE A, defined as special flood hazard areas subject to flooding by the 1% annual chance flood without base flood elevations determined, and a portion is in ZONE X (unshaded), defined as areas determined to be outside the 0.2% annual chance floodplain. The Surveyor makes no representation as to the accuracy of said FIRM or that it is the most current published flood map.

The utility appurtenances shown hereon include those visible at the time of the survey and are for general locative purposes only. In providing this boundary survey, no attempt has been made to obtain or show data concerning existence, size, depth, condition, capacity or location of any utility existing on or adjacent to the site, whether private, municipal or public owned.

The location of underground utilities shown hereon are from maps, plans or other information obtained from the respective utility operator(s) or other sources and may not represent all available utilities. The utilities have been field verified only to the extent visible or accessible.

The buildings and other improvements shown hereon represent the outline at ground level. The Surveyor has not located any underground buildings, overhead protrusions or improvements not obvious and located at ground level, unless otherwise noted.

Surveyor has not identified any geological or environmental conditions in connection with the subject property and Surveyor fully disclaims any and all responsibility related to issues or claims related thereto or resulting there from.

The elevations (and/or contours) shown hereon are referenced to T.B.M. "A" (square cut with "X" in concrete, Elev:506.92', NAVD88, GEOID18) and were determined as a result of an on the ground survey completed on July 23, 2025.

09-24-2026

STATE OF TEXAS REGISTERED 7082 THOMAS J. SAWYER PROFESSIONAL LAND SURVEYOR

PRIVATE UTILITY LINES SHOWN

AT LEAST 48 HOURS BEFORE EXCAVATING IN STREET R.O.W. OR EASEMENTS CALL THE LONE STAR NOTIFICATION 713-223-4567

TO ARRANGE FOR LINES TO BE TURNED OFF OR MOVED, CALL CENTERPOINT ENERGY AT 713-207-2222

NOTICE:

For your safety, you are required by Texas Law to call 811 at least 48 hours before you dig so that underground line can be marked. This verification does not fulfill your obligation to call 811.

VERIFICATION OF PRIVATE UTILITY LINES

Date:

CenterPoint Energy/Natural Gas Facilities Verification ONLY.
(This Signature verifies that you have shown CNP Natural Gas lines correctly – not to be used for conflict verification.) (Gas service lines are not shown.)
Signature Valid for six months.

Date:

CenterPoint Energy/UNDERGROUND Electrical Facilities Verification ONLY.
(This Signature verifies existing underground facilities – not to be used for conflict verification.)
Signature Valid for six months.

Date:

Approved for AT&T Texas/SWBT underground conduit facilities only.
Signature valid for one year.

NO.	DATE	REVISIONS	APP.

WILBARGER CREEK M.U.D. No. 2
TRAVIS COUNTY, TEXAS

WASTEWATER TREATMENT PLANT EXPANSION TO 1.5 MGD
CONTROL AND TOPOGRAPHIC SURVEY SHEET

QUIDDITY
Texas Board of Professional Engineers and Land Surveyors Reg. No. 10046100
912 S. Capital of Texas Highway, Suite 300 • Austin, TX 78746 • 512.441.9493

SCALE: 1" = 30'
DATE: SEPTEMBER 2026
JOB NO. 0A651-0021-02
SUBMITTED:
DGN. BY: SURVEY
DWN. BY:
DWG. NO.
SURV. BY:
F.B. NO.

0-C-1

SHEET NO. 11 OF 230

C:\Users\hc\DC\ACCDocs\Quiddity – Water-\0A651-0021-02 _ WILBARGER WWTP EXP. 1.5 MGD\Project Files\PLANS\A651-0021-02 Survey.dwg, Sep 23, 2026 – 7:08pm, hc

0 1 2 3 4 5 ORIGINAL SCALE IN INCHES FOR REDUCED PLANS

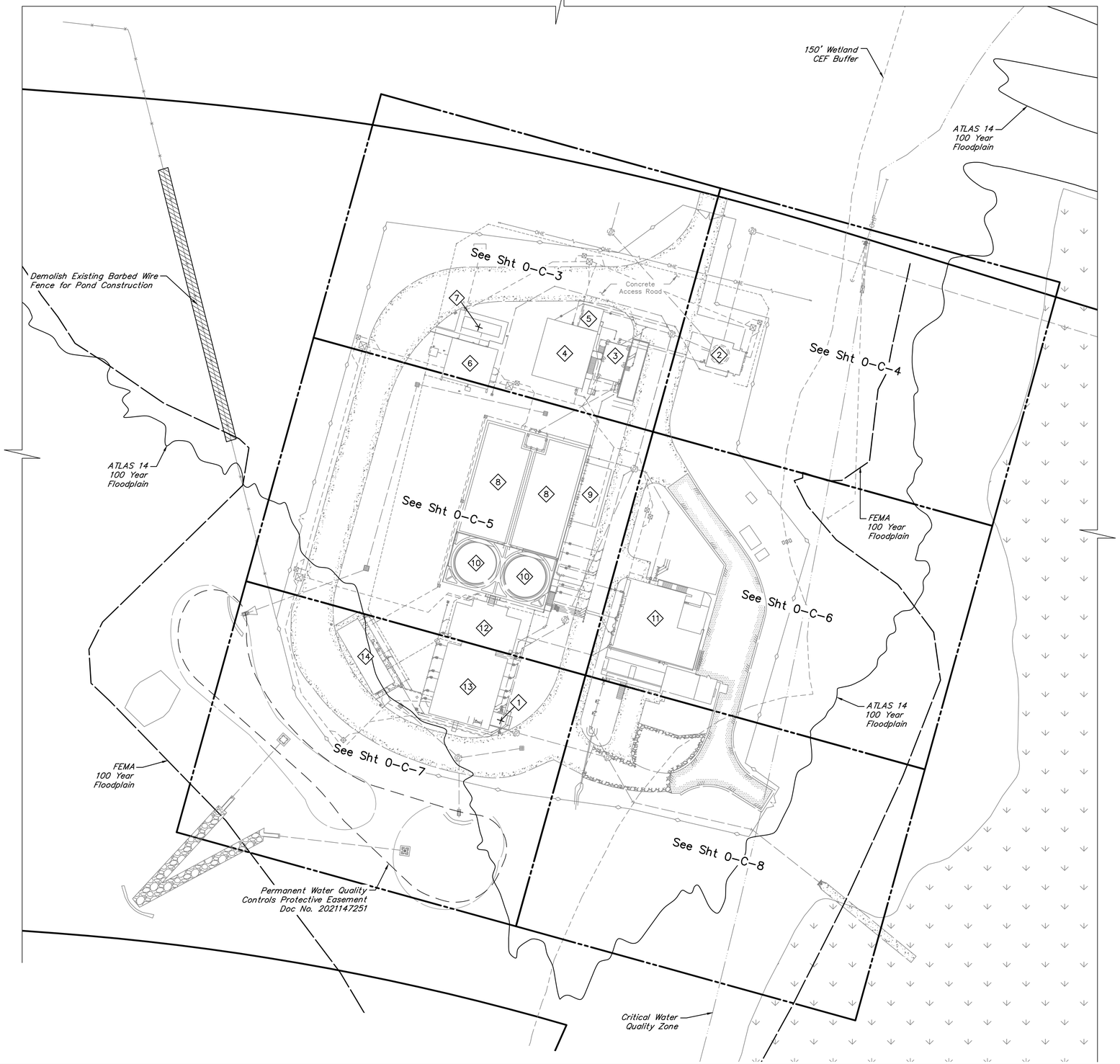

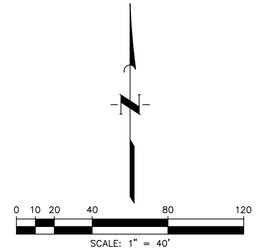

No.	DESCRIPTION
1	NPW PUMP STATION
2	LIFT STATION
3	HEADWORKS
4	PEAK SHAVING BASIN
5	PEAK SHAVING BASIN PUMP STATION
6	ELECTRICAL BUILDING
7	GENERATOR
8	AERATION BASINS
9	BLOWERS
10	CLARIFIERS
11	SLUDGE HOLDING TANKS
12	TERTIARY FILTERS
13	CHLORINE CONTACT BASIN
14	CHEMICAL STORAGE AREA

LEGEND:

TO BE DEMOLISHED

NOTES:

1. All Demolition Items shall be coordinated with the construction sequencing plan.

NO.	DATE	REVISIONS	APP.

WILBARGER CREEK M.U.D. No. 2
TRAVIS COUNTY, TEXAS

WASTEWATER TREATMENT PLANT
EXPANSION TO 1.5 MGD

EXISTING OVERALL SITE AND DEMOLITION PLAN

QUIDDITY
Texas Board of Professional Engineers and Land Surveyors Reg. No. F-23290
912 South Capital of Texas Hwy, Suite 300 • Austin, TX 78746 • 512.441.9493

SCALE:	1"=40'	DGN. BY:	JCP
DATE:	SEPTEMBER 2026	DWN. BY:	JSTRUHAR
JOB NO.	0A651-0021-02	DWG. NO.	
SUBMITTED:		SURV. BY:	
		F.B. NO.	

STATE OF TEXAS
JORDAN ZYLBERBERG
142350
LICENSED PROFESSIONAL ENGINEER
9/24/26

0-C-2
SHEET NO. 12 OF 230

C:\Users\hc\DC\ACCDocs\Quiddity – Water-\0A651-0021-02 _ WILBARGER WWTP EXP. 1.5 MGD\Project Files\PLANS\DEMO SITE PLANS.dwg, Sep 23, 2026 – 5:13pm, hc

0 1 2 3 4 5 ORIGINAL SCALE IN INCHES FOR REDUCED PLANS

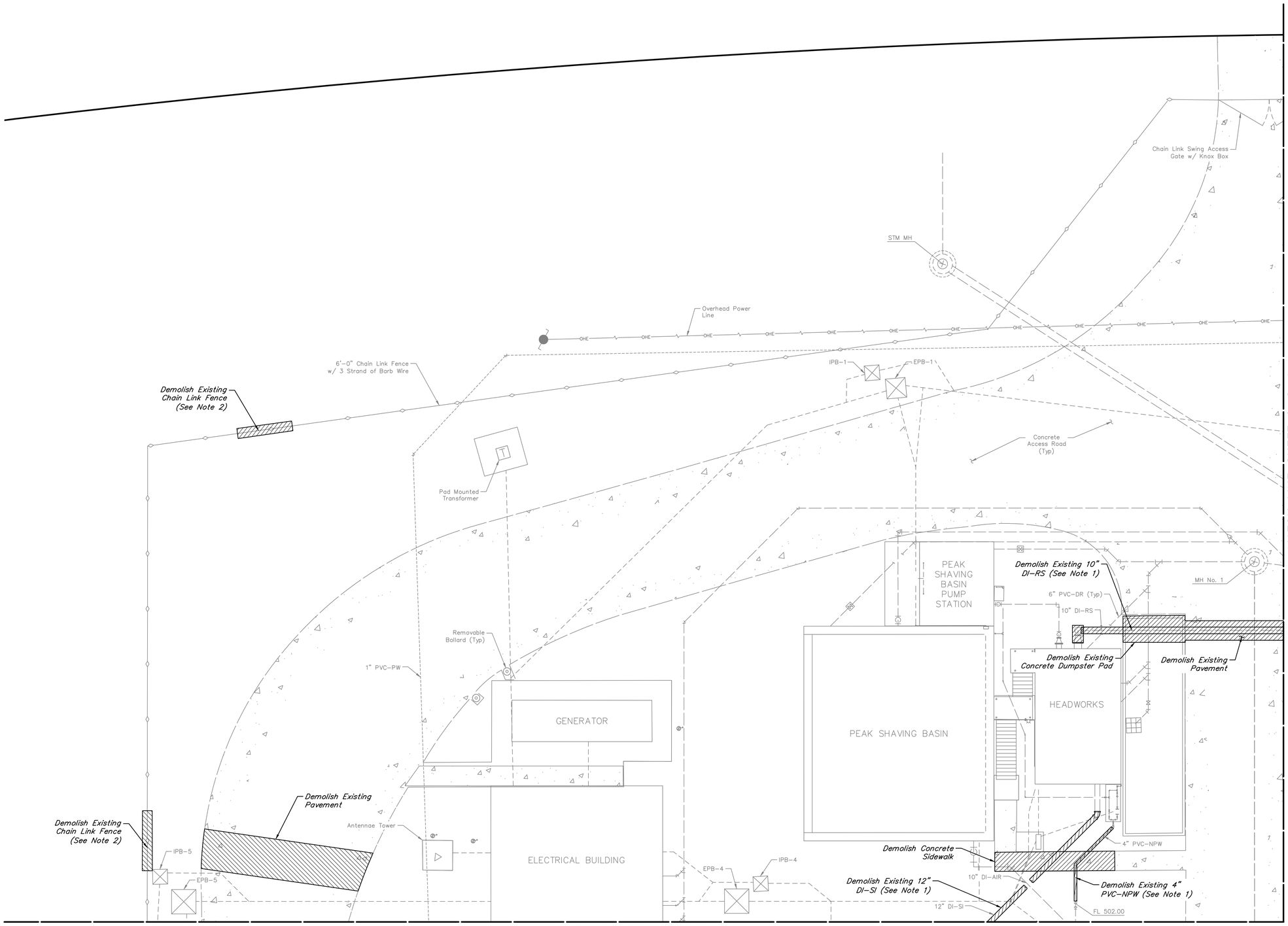

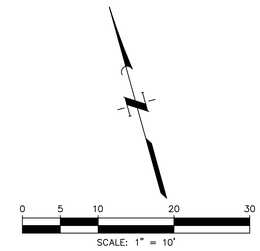

LEGEND:

TO BE DEMOLISHED

NOTES:

1. All Demolition Items shall be coordinated with the construction sequencing plan.
2. Locations with demolished fencing shall be secured by the Contractor to prevent intrusion at all times.

NO.	DATE	REVISIONS	APP.

WILBARGER CREEK M.U.D. No. 2
TRAVIS COUNTY, TEXAS

WASTEWATER TREATMENT PLANT EXPANSION TO 1.5 MGD

EXISTING SITE AND DEMOLITION PLAN – SHEET 1 OF 6

QUIDDITY
Texas Board of Professional Engineers and Land Surveyors Reg. No. F-23290
912 South Capital of Texas Hwy, Suite 300 • Austin, TX 78746 • 512.441.9493

SCALE:	1"=10'	DGN. BY:	JCP
DATE:	SEPTEMBER 2026	DWN. BY:	JSTRUHAR
JOB NO.	OA651-0021-02	DWG. NO.	
SUBMITTED:		SURV. BY:	
		F.B. NO.	

STATE OF TEXAS
JORDAN ZYLBERBERG
142350
LICENSED PROFESSIONAL ENGINEER
9/24/26

0-C-3
SHEET NO. 13 OF 230

C:\Users\hc\DC\ACCDocs\Quiddity – Water-\OA651-0021-02 _ WILBARGER WWTP EXP. 1.5 MGD\Project Files\PLANS\DEMO SITE PLANS.dwg, Sep 23, 2026 – 5:14pm, hc

0 1 2 3 4 5 ORIGINAL SCALE IN INCHES FOR REDUCED PLANS

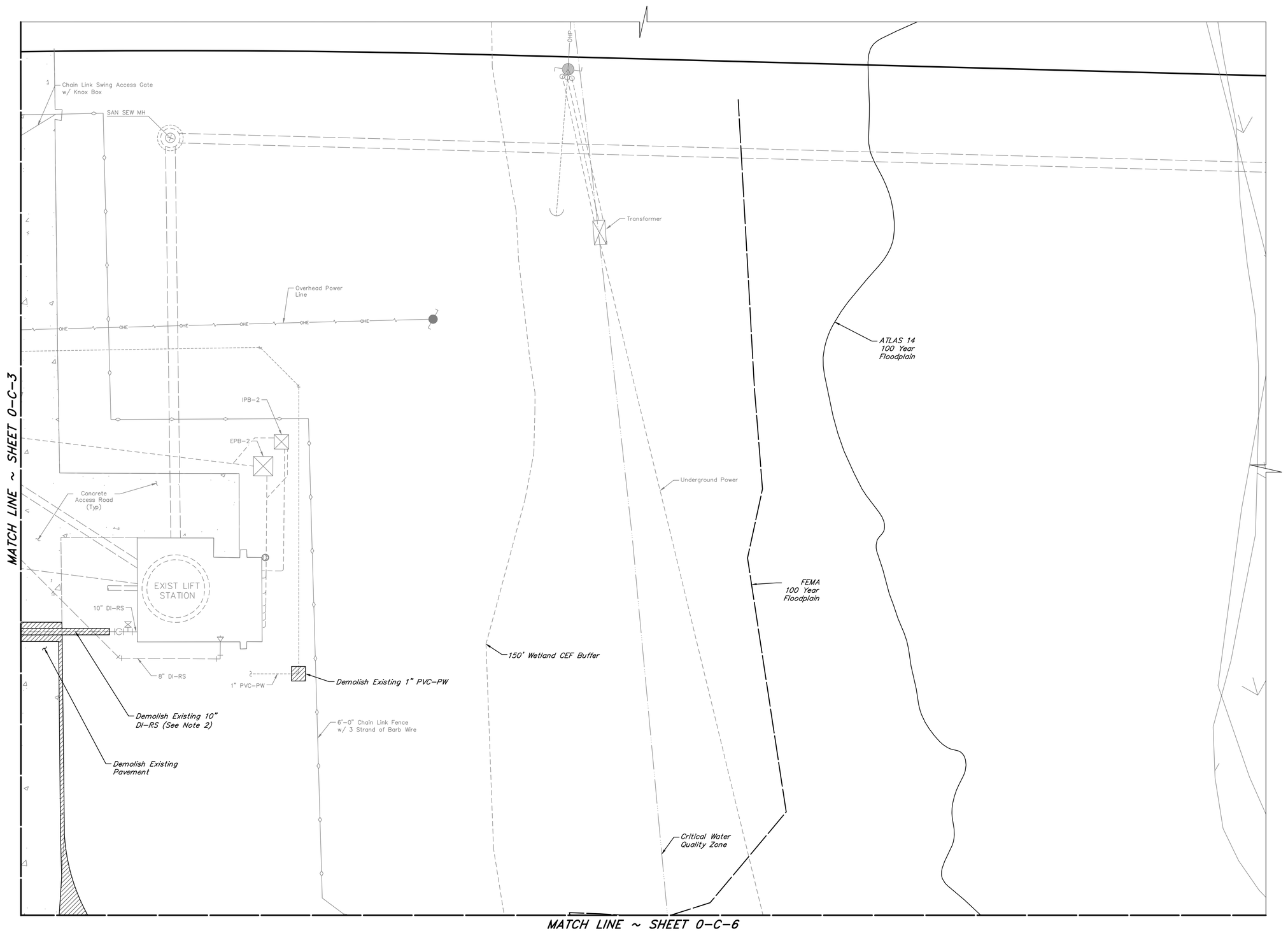

0 5 10 20 30
SCALE: 1" = 10'

LEGEND:

TO BE DEMOLISHED

NOTES:

1. All Demolition Items shall be coordinated with the construction sequencing plan.
2. Contractor shall either leave spool piece or install a new spool piece to install reducer at the force main shown on yard piping sheets.

NO.	DATE	REVISIONS	APP.

WILBARGER CREEK M.U.D. No. 2
TRAVIS COUNTY, TEXAS

WASTEWATER TREATMENT PLANT EXPANSION TO 1.5 MGD

EXISTING SITE AND DEMOLITION PLAN – SHEET 2 OF 6

QUIDDITY
Texas Board of Professional Engineers and Land Surveyors Reg. No. F-23290
912 South Capital of Texas Hwy, Suite 300 ★ Austin, TX 78746 ★ 512.441.9493

SCALE:	1"=10'	DGN. BY:	JCP
DATE:	SEPTEMBER 2026	DWN. BY:	JSTRUHAR
JOB NO.	0A651-0021-02	DWG. NO.	
SUBMITTED:		SURV. BY:	
		F.B. NO.	

STATE OF TEXAS
JORDAN ZYLBERBERG
142350
LICENSED PROFESSIONAL ENGINEER
9/24/26

0-C-4
SHEET NO. 14 OF 230

C:\Users\hc\DC\ACCDocs\Quiddity – Water-\0A651-0021-02 _ WILBARGER WWTP EXP. 1.5 MGD\Project Files\PLANS\DEMO SITE PLANS.dwg, Sep 23, 2026 – 5:14pm, hc

0 1 2 3 4 5 ORIGINAL SCALE IN INCHES FOR REDUCED PLANS

MATCH LINE SHEET 0-C-3

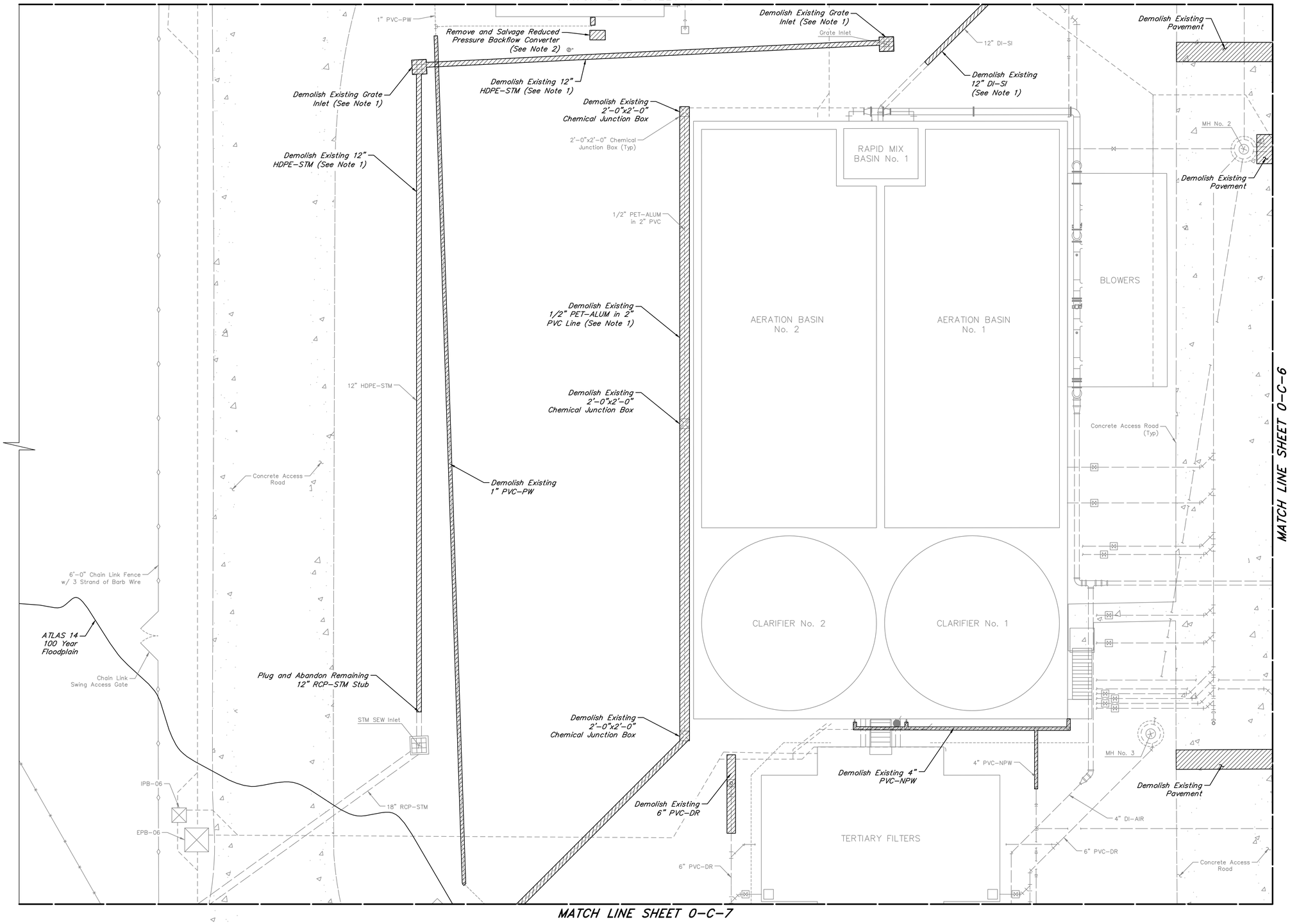

MATCH LINE SHEET 0-C-7

MATCH LINE SHEET 0-C-6

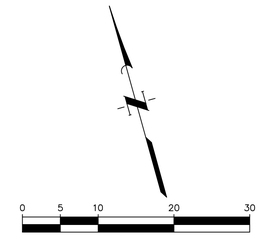

LEGEND:

TO BE DEMOLISHED

NOTES:

1. All Demolition Items shall be coordinated with the construction sequencing plan.
2. Contractor shall reinstall backflow preventer to avoid conflict with proposed electrical duct bank. Backflow preventer shall be out of service for no longer than 24 hours and shall be coordinated with Operator and Engineer.

NO.	DATE	REVISIONS	APP.

WILBARGER CREEK M.U.D. No. 2
TRAVIS COUNTY, TEXAS

WASTEWATER TREATMENT PLANT EXPANSION TO 1.5 MGD

EXISTING SITE AND DEMOLITION PLAN – SHEET 3 OF 6

QUIDDITY
Texas Board of Professional Engineers and Land Surveyors Reg. No. F-23290
912 South Capital of Texas Hwy, Suite 300 • Austin, TX 78746 • 512.441.9493

SCALE:	1"=10'	DGN. BY:	JCP
DATE:	SEPTEMBER 2026	DWN. BY:	JSTRUHAR
JOB NO.	0A651-0021-02	DWG. NO.	
SUBMITTED:		SURV. BY:	
		F.B. NO.	

STATE OF TEXAS
JORDAN ZYLBERBERG
142350
LICENSED PROFESSIONAL ENGINEER
9/24/26

0-C-5
SHEET NO. 15 OF 230

C:\Users\hc\DC\ACCDocs\Quiddity – Water-\0A651-0021-02 _ WILBARGER WWTP EXP. 1.5 MGD\Project Files\PLANS\DEMO SITE PLANS.dwg, Sep 23, 2026 – 5:15pm, hc

0 1 2 3 4 5 ORIGINAL SCALE IN INCHES FOR REDUCED PLANS

MATCH LINE SHEET 0-C-4

MATCH LINE SHEET 0-C-5

MATCH LINE SHEET 0-C-8

6'-0" Chain Link Fence w/ 3 Strand of Barb Wire

Demolish Existing Pavement

Demolish Existing Abandoned Concrete Pad (3 Typ)

Abandoned Pull Boxes

IPB-3

EPB-3

Concrete Access Road

Demolish Existing 12" OVF-DR (See Note 1)

12" OVF-DR

Demolish Existing Concrete (See Note 2)

Demolish Existing Pavement

SLUDGE HOLDING TANKS

Asphalt Access Road

Demolish Existing Pavement

Demolish Existing 4" PVC-NPW

ABANDONED STRUCTURE

ABANDONED CANOPY

ABANDONED BUILDING

Demolish Existing Pavement

Maintain 5' Buffer Zone Between Construction and 150' Wetland CEF Buffer

150' Wetland CEF Buffer

Critical Water Quality Zone

ATLAS 14 100 Year Floodplain

FEMA 100 Year Floodplain

0 5 10 20 30
SCALE: 1" = 10'

LEGEND:

TO BE DEMOLISHED

NOTES:

1. All Demolition Items shall be coordinated with the construction sequencing plan.
2. Demolish concrete and paving as necessary to install press feed pump forcemain from pump station to dewatering building. See Mechanical Sheets for piping extents.

NO.	DATE	REVISIONS	APP.

WILBARGER CREEK M.U.D. No. 2
TRAVIS COUNTY, TEXAS

WASTEWATER TREATMENT PLANT EXPANSION TO 1.5 MGD

EXISTING SITE AND DEMOLITION PLAN – SHEET 4 OF 6

QUIDDITY
Texas Board of Professional Engineers and Land Surveyors Reg. No. F-23290
912 South Capital of Texas Hwy, Suite 300 • Austin, TX 78746 • 512.441.9493

SCALE:	1"=10'	DGN. BY:	JCP
DATE:	SEPTEMBER 2026	DWN. BY:	JSTRUHAR
JOB NO.	0A651-0021-02	DWG. NO.	
SUBMITTED:		SURV. BY:	
		F.B. NO.	

STATE OF TEXAS
JORDAN ZYLBERBERG
142350
LICENSED PROFESSIONAL ENGINEER
9/24/26

0-C-6
SHEET NO. 16 OF 230

C:\Users\hc\DC\ACCDocs\Quiddity – Water-\0A651-0021-02 _ WILBARGER WWTP EXP. 1.5 MGD\Project Files\PLANS\DEMO SITE PLANS.dwg, Sep 23, 2026 – 5:15pm, hc

0 1 2 3 4 5 ORIGINAL SCALE IN INCHES FOR REDUCED PLANS

MATCH LINE SHEET 0-C-5

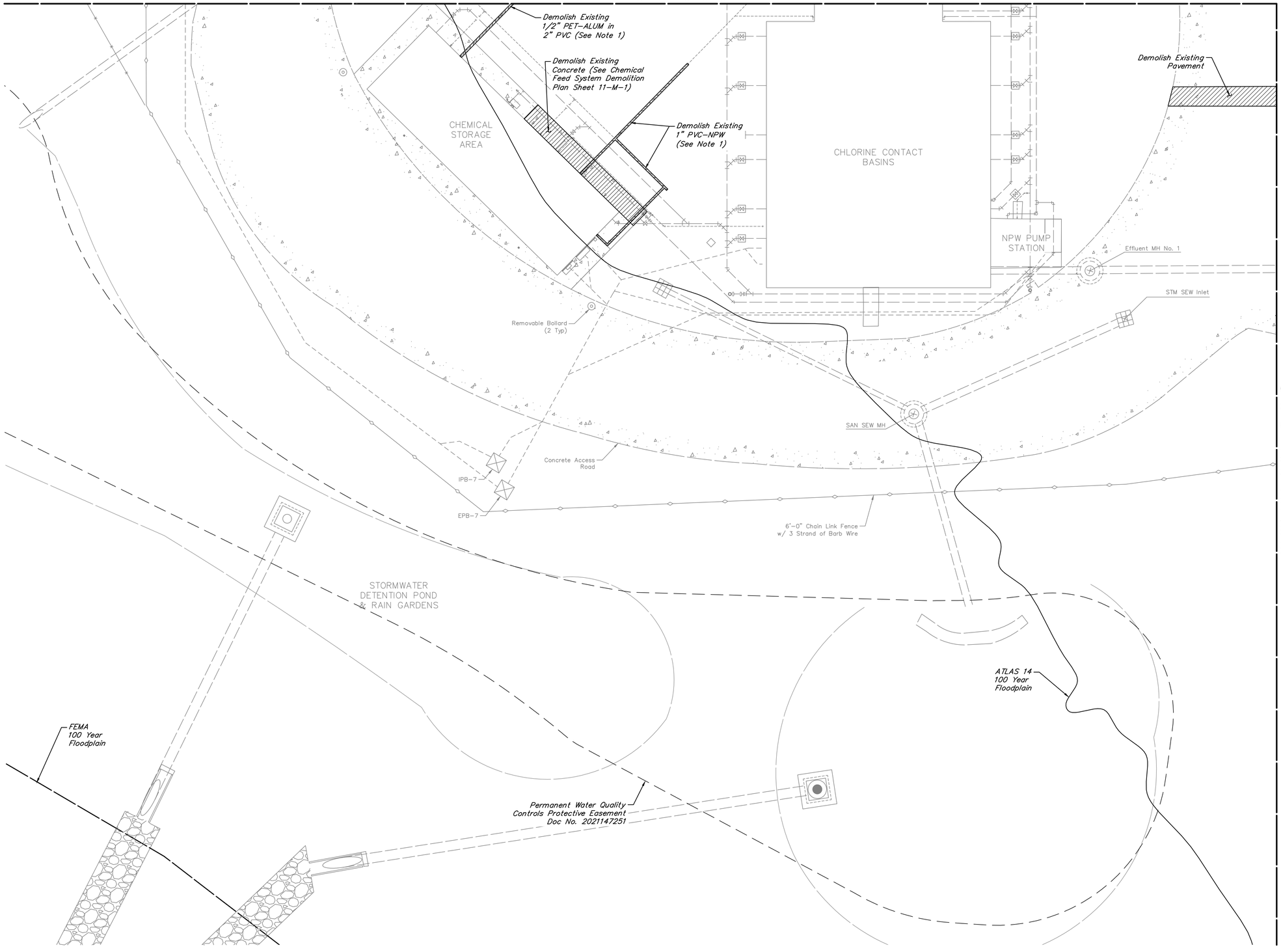

MATCH LINE SHEET 0-C-8

0 5 10 20 30
SCALE: 1" = 10'

LEGEND:

TO BE DEMOLISHED

NOTES:

1. All Demolition Items shall be coordinated with the construction sequencing plan.

NO.	DATE	REVISIONS	APP.

WILBARGER CREEK M.U.D. No. 2
TRAVIS COUNTY, TEXAS

WASTEWATER TREATMENT PLANT EXPANSION TO 1.5 MGD

EXISTING SITE AND DEMOLITION PLAN – SHEET 5 OF 6

QUIDDITY
Texas Board of Professional Engineers and Land Surveyors Reg. No. F-23290
912 South Capital of Texas Hwy, Suite 300 • Austin, TX 78746 • 512.441.9493

SCALE:	1"=10'	DGN. BY:	JCP
DATE:	SEPTEMBER 2026	DWN. BY:	JSTRUHAR
JOB NO.	0A651-0021-02	DWG. NO.	
SUBMITTED:		SURV. BY:	
		F.B. NO.	

STATE OF TEXAS
JORDAN ZYLBERBERG
142350
LICENSED PROFESSIONAL ENGINEER
9/24/26

0-C-7
SHEET NO. 17 OF 230

C:\Users\hc\DC\ACCDocs\Quiddity – Water-\0A651-0021-02 _ WILBARGER WWTP EXP. 1.5 MGD\Project Files\PLANS\DEMO SITE PLANS.dwg, Sep 23, 2026 – 5:15pm, hc

0 1 2 3 4 5 ORIGINAL SCALE IN INCHES FOR REDUCED PLANS

MATCH LINE SHEET 0-C-6

MATCH LINE SHEET 0-C-7

Demolish Existing Pavement

Demolish Existing Pavement

Demolish Existing Pavement

Maintain 5' Buffer Zone Between Construction and 150' Wetland CEF Buffer

Critical Water Quality Zone

18" PVC-STM

Exist Gravel Access Road

Exist Asphalt Access Road

Exist Concrete Access Road

Exist Access Gate

Effluent MH No. 2

ATLAS 14 100 Year Floodplain

18" PVC-STM

FEMA 100 Year Floodplain

6'-0" Chain Link Fence w/ 3 Strand of Barb Wire

150' Wetland CEF Buffer

Outfall

STORMWATER DETENTION POND & RAIN GARDENS

N

0 5 10 20 30

SCALE: 1" = 10'

NO.	DATE	REVISIONS	APP.

WILBARGER CREEK M.U.D. No. 2
TRAVIS COUNTY, TEXAS

WASTEWATER TREATMENT PLANT EXPANSION TO 1.5 MGD

EXISTING SITE AND DEMOLITION PLAN – SHEET 6 OF 6

QUIDDITY
Texas Board of Professional Engineers and Land Surveyors Reg. No. F-23290
912 South Capital of Texas Hwy, Suite 300 • Austin, TX 78746 • 512.441.9493

SCALE: 1"=10' DGN. BY: JCP
DATE: SEPTEMBER 2026 DWN. BY: JSTRUHAR
JOB NO. 0A651-0021-02 DWG. NO.
SUBMITTED: SURV. BY:
F.B. NO.

STATE OF TEXAS
JORDAN ZYLBERBERG
142350
LICENSED PROFESSIONAL ENGINEER
9/24/26

0-C-8
SHEET NO. 18 OF 230

C:\Users\hc\DC\ACCDocs\Quiddity – Water-\0A651-0021-02 _ WILBARGER WWTP EXP. 1.5 MGD\Project Files\PLANS\DEMO SITE PLANS.dwg, Sep 23, 2026 – 5:16pm, hc

0 1 2 3 4 5 ORIGINAL SCALE IN INCHES FOR REDUCED PLANS

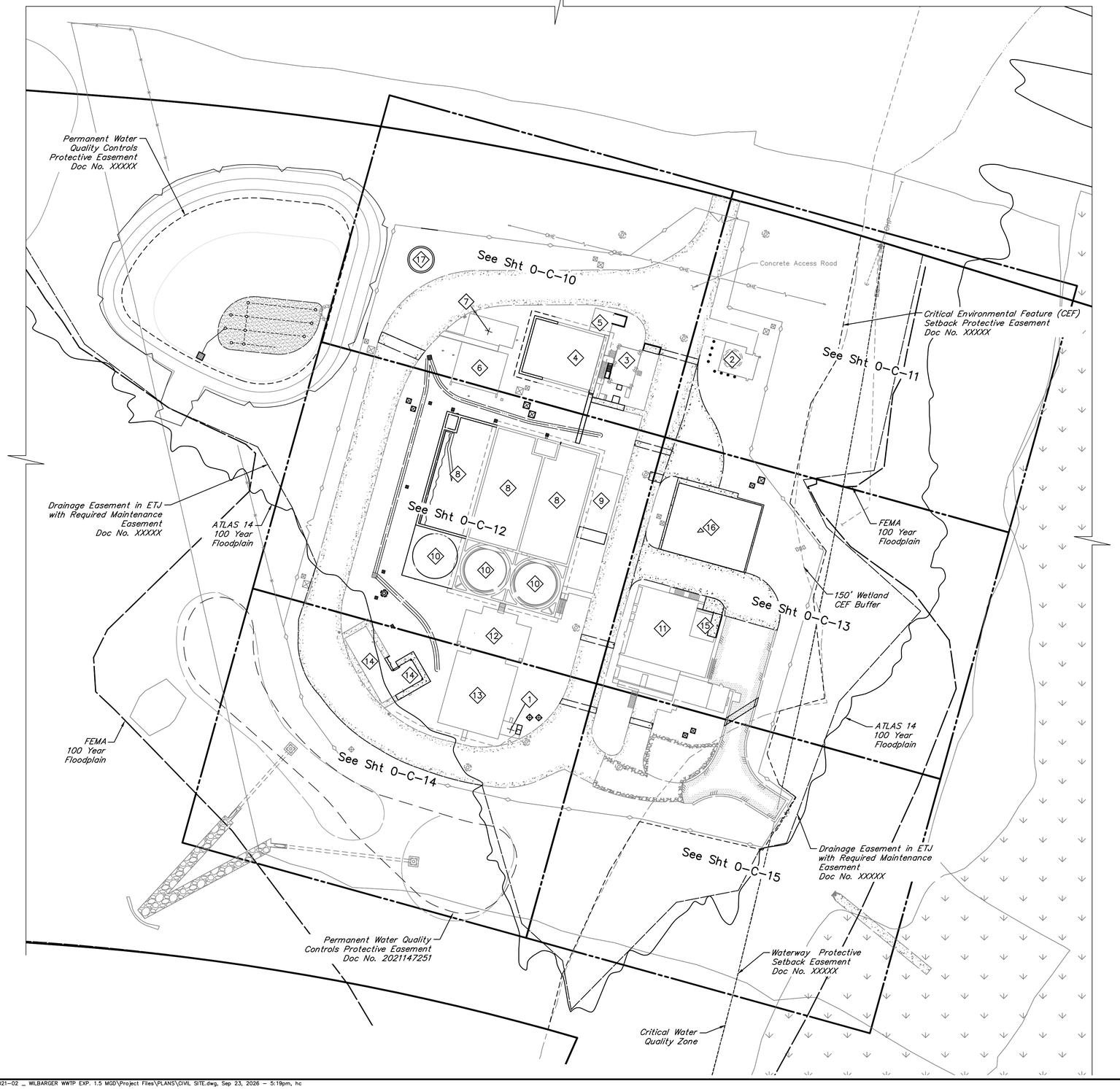

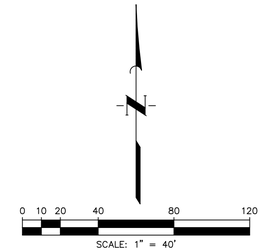

No.	DESCRIPTION		
1	NPW PUMP STATION	10	CLARIFIERS
2	LIFT STATION	11	SLUDGE HOLDING TANKS
3	HEADWORKS	12	TERTIARY FILTERS
4	PEAK SHAVING BASIN	13	CHLORINE CONTACT BASIN
5	PEAK SHAVING BASIN PUMP STATION	14	CHEMICAL STORAGE AREA
6	ELECTRICAL BUILDING	15	PRESS FEED PUMPS
7	GENERATOR	16	DEWATERING FACILITY
8	AERATION BASINS	17	FIRE FLOW TANK
9	BLOWERS		

NO.	DATE	REVISIONS	APP.

WILBARGER CREEK M.U.D. No. 2
TRAVIS COUNTY, TEXAS

WASTEWATER TREATMENT PLANT EXPANSION TO 1.5 MGD

OVERALL SITE PLAN

QUIDDITY
Texas Board of Professional Engineers and Land Surveyors Reg. No. F-23290
912 South Capital of Texas Hwy, Suite 300 • Austin, TX 78746 • 512.441.9493

SCALE:	1"=40'	DGN. BY:	JCP
DATE:	SEPTEMBER 2026	DWN. BY:	JSTRUHAR
JOB NO.	0A651-0021-02	DWG. NO.	
SUBMITTED:		SURV. BY:	
		F.B. NO.	

STATE OF TEXAS
JORDAN ZYLBERBERG
142350
LICENSED PROFESSIONAL ENGINEER
9/24/26

0-C-9
SHEET NO. 19 OF 230

C:\Users\hc\DC\ACCDocs\Quiddity – Water–\0A651–0021–02 _ WILBARGER WWTP EXP. 1.5 MGD\Project Files\PLANS\CIVIL SITE.dwg, Sep 23, 2026 – 5:19pm, hc

0 1 2 3 4 5 ORIGINAL SCALE IN INCHES FOR REDUCED PLANS

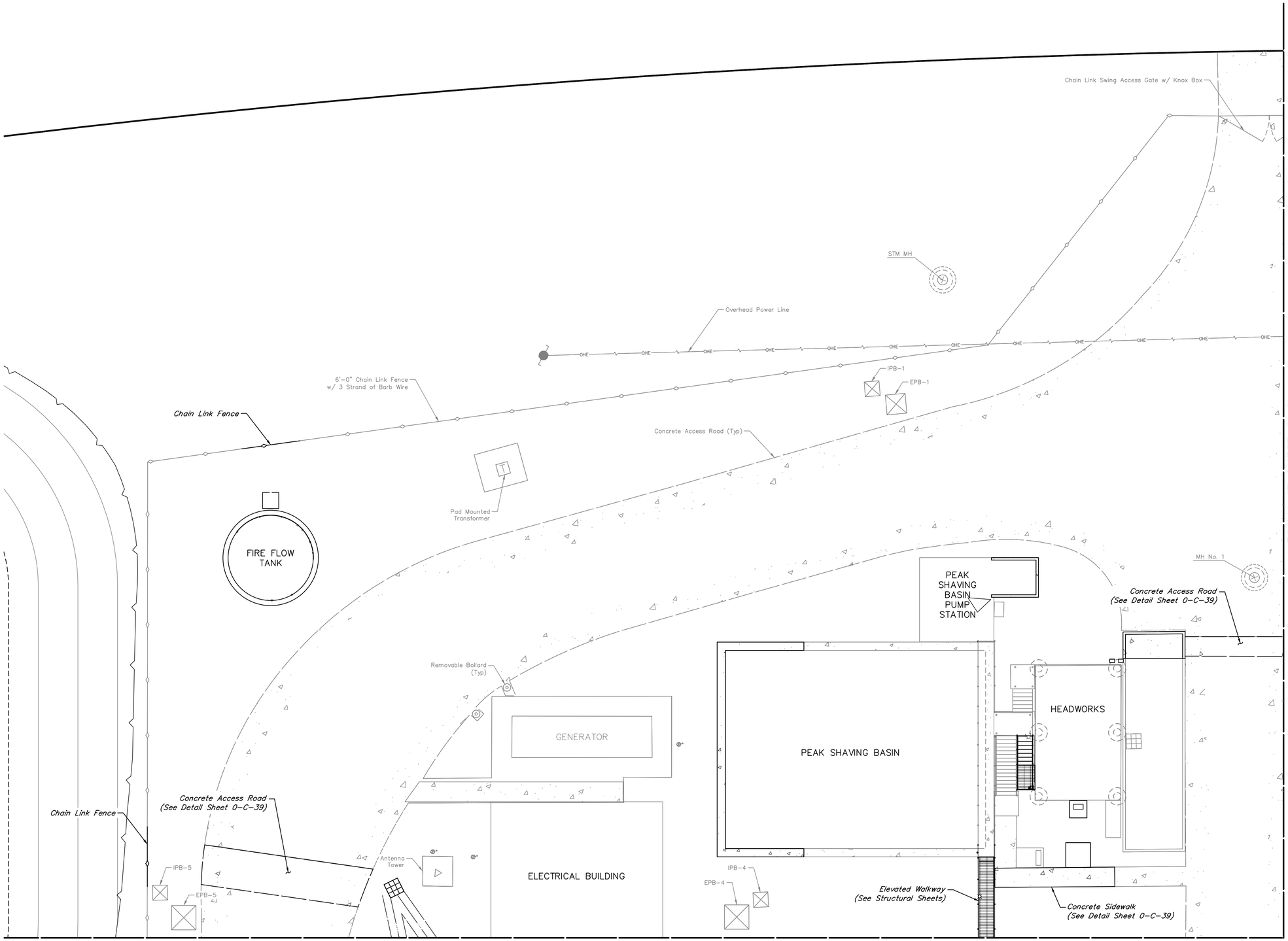

MATCH LINE SHEET 0-C-11

MATCH LINE SHEET 0-C-12

0 5 10 20 30
SCALE: 1" = 10'

NO.	DATE	REVISIONS	APP.

WILBARGER CREEK M.U.D. No. 2
TRAVIS COUNTY, TEXAS

WASTEWATER TREATMENT PLANT
EXPANSION TO 1.5 MGD

SITE PLAN
– SHEET 1 OF 6

QUIDDITY
Texas Board of Professional Engineers and Land Surveyors Reg. No. F-23290
912 South Capital of Texas Hwy, Suite 300 • Austin, TX 78746 • 512.441.9493

SCALE:	1"=10'	DGN. BY:	JCP
DATE:	SEPTEMBER 2026	DWN. BY:	JSTRUHAR
JOB NO.	0A651-0021-02	DWG. NO.	
SUBMITTED:		SURV. BY:	
		F.B. NO.	

STATE OF TEXAS
JORDAN ZYLBERBERG
142350
LICENSED PROFESSIONAL ENGINEER
9/24/26

0-C-10
SHEET NO. 20 OF 230

C:\Users\hc\DC\ACCDocs\Quiddity – Water-\0A651-0021-02 _ WILBARGER WWTP EXP. 1.5 MGD\Project Files\PLANS\CIVIL SITE.dwg, Sep 23, 2026 – 5:22pm, hc

0 1 2 3 4 5 ORIGINAL SCALE IN INCHES FOR REDUCED PLANS

MATCH LINE ~ SHEET 0-C-10

1 Chain Link Swing Access Gate w/ Knox Box

SAN SEW MH

6'-0" Chain Link Fence w/ 3 Strand of Barb Wire

Overhead Power Line

OHE

IPB-2

EPB-2

LIFT STATION

Concrete Access Road (See Detail Sheet 0-C-39)

OHP

Transformer

FEMA 100 Year Floodplain

Waterway Protective Setback Easement Doc No. XXXXX

Critical Environmental Feature (CEF) Setback Protective Easement Doc No. XXXXX

ATLAS 14 100 Year Floodplain

Underground Power

150' Wetland CEF Buffer

Drainage Easement in ETJ with Required Maintenance Easement Doc No. XXXXX

Critical Water Quality Zone

MATCH LINE ~ SHEET 0-C-13

0 5 10 20 30
SCALE: 1" = 10'

NO.	DATE	REVISIONS	APP.

WILBARGER CREEK M.U.D. No. 2
TRAVIS COUNTY, TEXAS

WASTEWATER TREATMENT PLANT EXPANSION TO 1.5 MGD

SITE PLAN
– SHEET 2 OF 6

QUIDDITY
Texas Board of Professional Engineers and Land Surveyors Reg. No. F-23290
912 South Capital of Texas Hwy, Suite 300 • Austin, TX 78746 • 512.441.9493

SCALE: 1"=10'	DGN. BY: JCP
DATE: SEPTEMBER 2026	DWN. BY: JSTRUHAR
JOB NO. 0A651-0021-02	DWG. NO.
SUBMITTED:	SURV. BY:
	F.B. NO.

STATE OF TEXAS
JORDAN ZYLBERBERG
142350
LICENSED PROFESSIONAL ENGINEER
9/24/26

0-C-11
SHEET NO. 21 OF 230

C:\Users\hc\DC\ACCDocs\Quiddity – Water-\0A651-0021-02 _ WILBARGER WWTP EXP. 1.5 MGD\Project Files\PLANS\CIVIL SITE.dwg, Sep 23, 2026 – 5:25pm, hc

0 1 2 3 4 5 ORIGINAL SCALE IN INCHES FOR REDUCED PLANS

MATCH LINE SHEET 0-C-10

IPB-9
EPB-9
Concrete Access Road (See Detail Sheet 0-C-39)
CPB-00-005
CPB-00-006
CPB-00-007
CPB-00-008
Elevated Walkway (See Structural Sheets)
IPB-8
EPB-8
MH No. 2
RAPID MIX BASIN No. 2
RAPID MIX BASIN No. 1
Chain Link Swing Access Gate
AERATION BASIN No. 3
AERATION BASIN No. 2
AERATION BASIN No. 1
BLOWERS
Concrete Access Road (See Detail Sheet 0-C-39)
CPB-00-004
Concrete Access Road (Typ)
6'-0" Chain Link Fence w/ 3 Strand of Barb Wire
CLARIFIER No. 3
CLARIFIER No. 2
CLARIFIER No. 1
CPB-00-003
ATLAS 14 100 Year Floodplain
SAN SEW Inlet
MH No. 3
MH No. 4
Concrete Access Road (See Detail Sheet 0-C-39)
IPB-6
EPB-6
CPB-00-002
TERTIARY FILTERS
Drainage Easement in ETJ with Required Maintenance Easement Doc No. XXXXX
CPB-00-001

MATCH LINE SHEET 0-C-14

MATCH LINE SHEET 0-C-13

0 5 10 20 30
SCALE: 1" = 10'

NOTES:

1. Proposed Concrete shall be joint-to-joint replacement. Extent shall be field verified by Contractor.

NO.	DATE	REVISIONS	APP.

WILBARGER CREEK M.U.D. No. 2
TRAVIS COUNTY, TEXAS

WASTEWATER TREATMENT PLANT EXPANSION TO 1.5 MGD

SITE PLAN
– SHEET 3 OF 6

QUIDDITY
Texas Board of Professional Engineers and Land Surveyors Reg. No. F-23290
912 South Capital of Texas Hwy, Suite 300 • Austin, TX 78746 • 512.441.9493

SCALE: 1"=10'
DATE: SEPTEMBER 2026
JOB NO. 0A651-0021-02
SUBMITTED:
DGN. BY: JCP
DWN. BY: JSTRUHAR
DWG. NO.
SURV. BY:
F.B. NO.

STATE OF TEXAS
JORDAN ZYLBERBERG
142350
LICENSED PROFESSIONAL ENGINEER
9/24/26

0-C-12
SHEET NO. 22 OF 230

C:\Users\hc\DC\ACCDocs\Quiddity – Water-\0A651-0021-02 _ WILBARGER WWTP EXP. 1.5 MGD\Project Files\PLANS\CIVIL SITE.dwg, Sep 23, 2026 – 5:27pm, hc

0 1 2 3 4 5 ORIGINAL SCALE IN INCHES FOR REDUCED PLANS

MATCH LINE SHEET 0-C-11

MATCH LINE SHEET 0-C-12

MATCH LINE SHEET 0-C-15

Concrete Access Road (See Detail Sheet 0-C-39)

IPB-10

EPB-10

Chain Link Fence

Waterway Protective Setback Easement Doc No. XXXXX

ATLAS 14 100 Year Floodplain

FEMA 100 Year Floodplain

Abandoned Pull Boxes

Critical Water Quality Zone

IPB-3

EPB-3

DEWATERING FACILITY

Critical Environmental Feature (CEF) Setback Protective Easement Doc No. XXXXX

Concrete Access Road (See Detail Sheet 0-C-39)

150' Wetland CEF Buffer

Drainage Easement in ETJ with Required Maintenance Easement Doc No. XXXXX

PRESS FEED PUMPS

SLUDGE HOLDING TANK

Asphalt Access Road

Concrete Access Road (See Detail Sheet 0-C-39)

Concrete Access Road

ABANDONED STRUCTURE

ABANDONED CANOPY

ABANDONED BUILDING

Asphalt Access Road (See Detail Sheet 0-C-39)

0 5 10 20 30

SCALE: 1" = 10'

NOTES:

1. Proposed Concrete shall be joint-to-joint replacement. Extent shall be field verified by Contractor.

NO.	DATE	REVISIONS	APP.

WILBARGER CREEK M.U.D. No. 2
TRAVIS COUNTY, TEXAS

WASTEWATER TREATMENT PLANT EXPANSION TO 1.5 MGD

SITE PLAN
– SHEET 4 OF 6

QUIDDITY
Texas Board of Professional Engineers and Land Surveyors Reg. No. F-23290
912 South Capital of Texas Hwy, Suite 300 • Austin, TX 78746 • 512.441.9493

SCALE: 1"=10' DGN. BY: JCP
DATE: SEPTEMBER 2026 DWN. BY: JSTRUHAR
JOB NO. 0A651-0021-02 DWG. NO.
SUBMITTED: SURV. BY:
F.B. NO.

STATE OF TEXAS
JORDAN ZYLBERBERG
142350
LICENSED PROFESSIONAL ENGINEER
9/24/26

0-C-13
SHEET NO. 23 OF 230

C:\Users\hc\DC\ACCDocs\Quiddity – Water-\0A651-0021-02 _ WILBARGER WWTP EXP. 1.5 MGD\Project Files\PLANS\CIVIL SITE.dwg, Sep 23, 2026 – 6:14pm, hc

0 1 2 3 4 5 ORIGINAL SCALE IN INCHES FOR REDUCED PLANS

MATCH LINE SHEET 0-C-12

CHEMICAL STORAGE AREA

CHEMICAL STORAGE AREA EXPANSION

CHLORINE CONTACT BASINS

NPW PUMP STATION

Concrete Access Road
(See Detail Sheet 0-C-39)

EPB-12

IPB-12

Effluent MH No. 1

STM SEW Inlet

STM SEW Inlet

Removable Bollard
(2 Typ)

STM SEW MH

IPB-7

EPB-7

Concrete Access Road

6'-0" Chain Link Fence
w/ 3 Strand of Barb Wire

Drainage Easement in ETJ
with Required Maintenance
Easement
Doc No. XXXXX

ATLAS 14
100 Year
Floodplain

STORMWATER
DETENTION POND
& RAIN GARDENS

Permanent Water Quality
Controls Protective Easement
Doc No. 2021147251

FEMA
100 Year
Floodplain

MATCH LINE SHEET 0-C-15

0 5 10 20 30
SCALE: 1" = 10'

NO.	DATE	REVISIONS	APP.

WILBARGER CREEK M.U.D. No. 2
TRAVIS COUNTY, TEXAS

WASTEWATER TREATMENT PLANT
EXPANSION TO 1.5 MGD

SITE PLAN
– SHEET 5 OF 6

QUIDDITY
Texas Board of Professional Engineers and Land Surveyors Reg. No. F-23290
912 South Capital of Texas Hwy, Suite 300 • Austin, TX 78746 • 512.441.9493

SCALE: 1"=10'	DGN. BY: JCP
DATE: SEPTEMBER 2026	DWN. BY: JSTRUHAR
JOB NO. 0A651-0021-02	DWG. NO.
SUBMITTED:	SURV. BY:
	F.B. NO.

STATE OF TEXAS
JORDAN ZYLBERBERG
142350
LICENSED PROFESSIONAL ENGINEER
9/24/26

0-C-14
SHEET NO. 24 OF 230

C:\Users\hc\DC\ACCDocs\Quiddity – Water-\0A651-0021-02 _ WILBARGER WWTP EXP. 1.5 MGD\Project Files\PLANS\CIVIL SITE.dwg, Sep 23, 2026 – 5:32pm, hc

0 1 2 3 4 5 ORIGINAL SCALE IN INCHES FOR REDUCED PLANS

MATCH LINE SHEET 0-C-13

MATCH LINE SHEET 0-C-14

Asphalt Access Road
(See Detail Sheet 0-C-39)

IPB-11

EPB-11

Concrete Access Road

Concrete Access Road
(See Detail Sheet 0-C-39)

Critical Water Quality Zone

150' Wetland CEF Buffer

Exist Asphalt Access Road

Effluent MH No. 2

Exist Gravel Access Road

Exist Access Gate

6'-0" Chain Link Fence w/ 3 Strand of Barb Wire

FEMA 100 Year Floodplain

Critical Environmental Feature (CEF)
Setback Protective Easement
Doc No. XXXXX

Waterway Protective Setback Easement
Doc No. XXXXX

Outfall

STORMWATER DETENTION POND & RAIN GARDENS

Drainage Easement in ETJ with Required Maintenance Easement
Doc No. XXXXX

ATLAS 14 100 Year Floodplain

0 5 10 20 30
SCALE: 1" = 10'

NO.	DATE	REVISIONS	APP.

WILBARGER CREEK M.U.D. No. 2
TRAVIS COUNTY, TEXAS

WASTEWATER TREATMENT PLANT
EXPANSION TO 1.5 MGD

SITE PLAN
– SHEET 6 OF 6

QUIDDITY
Texas Board of Professional Engineers and Land Surveyors Reg. No. F-23290
912 South Capital of Texas Hwy, Suite 300 • Austin, TX 78746 • 512.441.9493

SCALE: 1"=10' DGN. BY: JCP
DATE: SEPTEMBER 2026 DWN. BY: JSTRUHAR
JOB NO. 0A651-0021-02 DWG. NO.
SUBMITTED: SURV. BY:
F.B. NO.

STATE OF TEXAS
JORDAN ZYLBERBERG
142350
LICENSED PROFESSIONAL ENGINEER
9/24/26

0-C-15
SHEET NO. 25 OF 230

C:\Users\hc\DC\ACCDocs\Quiddity – Water-\0A651-0021-02 _ WILBARGER WWTP EXP. 1.5 MGD\Project Files\PLANS\CIVIL SITE.dwg, Sep 23, 2026 – 5:34pm, hc

0 1 2 3 4 5 ORIGINAL SCALE IN INCHES FOR REDUCED PLANS

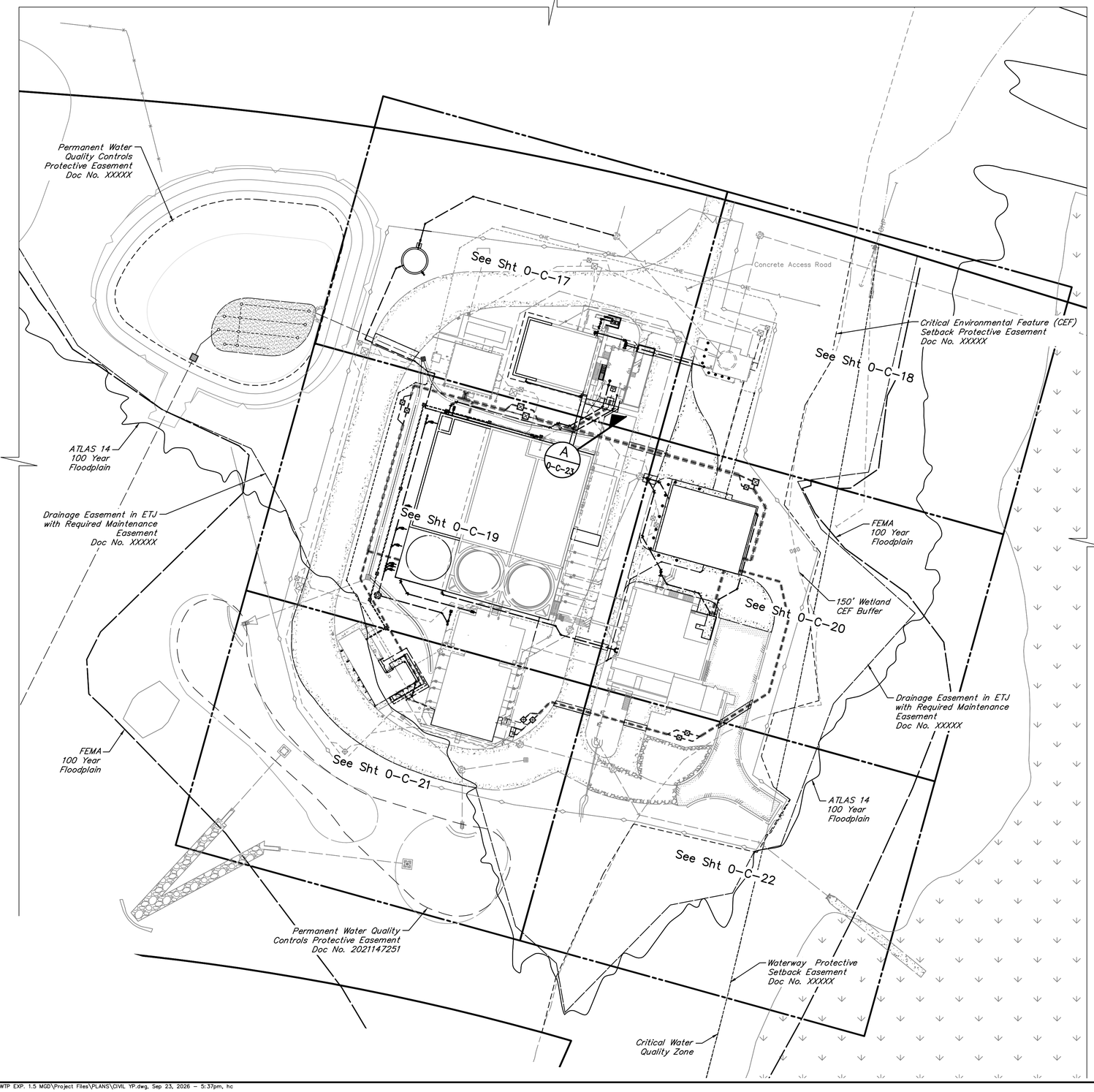

0 10 20 40 80 120
SCALE: 1" = 40'

NO.	DATE	REVISIONS	APP.

WILBARGER CREEK M.U.D. No. 2
TRAVIS COUNTY, TEXAS

WASTEWATER TREATMENT PLANT
EXPANSION TO 1.5 MGD

OVERALL YARD PIPING PLAN

QUIDDITY
Texas Board of Professional Engineers and Land Surveyors Reg. No. F-23290
912 South Capital of Texas Hwy, Suite 300 • Austin, TX 78746 • 512.441.9493

SCALE:	1"=40'	DGN. BY:	JCP
DATE:	SEPTEMBER 2026	DWN. BY:	JSTRUHAR
JOB NO.	0A651-0021-02	DWG. NO.	
SUBMITTED:		SURV. BY:	
		F.B. NO.	

STATE OF TEXAS
JORDAN ZYLBERBERG
142350
LICENSED PROFESSIONAL ENGINEER
9/24/26

0-C-16
SHEET NO. 26 OF 230

C:\Users\hc\DC\ACCDocs\Quiddity – Water-\0A651-0021-02 _ WILBARGER WWTP EXP. 1.5 MGD\Project Files\PLANS\CIVIL YP.dwg, Sep 23, 2026 – 5:37pm, hc

ORIGINAL SCALE IN INCHES FOR REDUCED PLANS

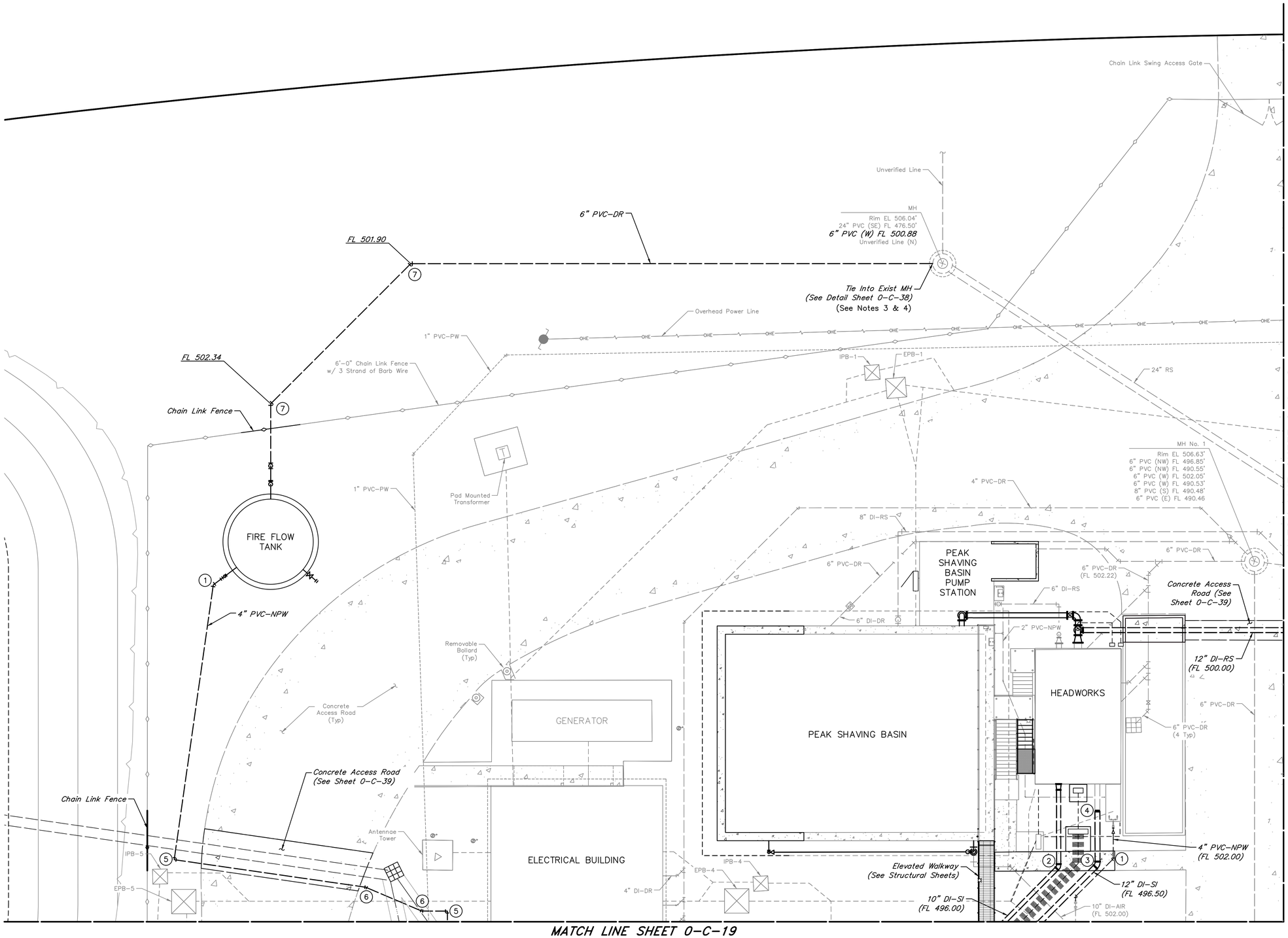

MATCH LINE SHEET 0-C-18

MATCH LINE SHEET 0-C-19

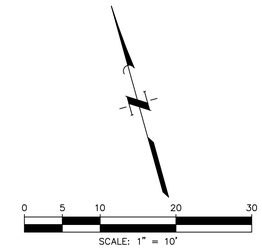

VALVES, FITTINGS, AND ACCESSORIES SCHEDULE

No.	DESCRIPTION
1	4" 45° Bend, MJ
2	10" 45° Bend, MJ
3	12" 45° Bend, MJ
4	12" Sleeve Coupling, MJ
5	4" 90° Bend, MJ
6	4" 22.5° Bend, MJ
7	6" 45° Bend, MJ

NOTES:

1. Existing flow lines are based on best available record drawings. Contractor shall field verify existing conditions prior to beginning work and notify engineer of any conflicts.
2. Maintain a minimum 6-inch clearance between all piping and duct bank.
3. Contractor is responsible for ensuring that all debris has been removed from the manhole.
4. **Contractor may bypass manhole if deemed necessary at no additional cost to the owner. Contractor shall provide a bypass plan that will require approval by the engineer.**

NO.	DATE	REVISIONS	APP.

WILBARGER CREEK M.U.D. No. 2
TRAVIS COUNTY, TEXAS

WASTEWATER TREATMENT PLANT EXPANSION TO 1.5 MGD

YARD PIPING PLAN – SHEET 1 OF 6

QUIDDITY
Texas Board of Professional Engineers and Land Surveyors Reg. No. F-23290
912 South Capital of Texas Hwy, Suite 300 • Austin, TX 78746 • 512.441.9493

SCALE:	1"=10'	DGN. BY:	JCP
DATE:	SEPTEMBER 2026	DWN. BY:	JSTRUHAR
JOB NO.	0A651-0021-02	DWG. NO.	
SUBMITTED:		SURV. BY:	
		F.B. NO.	

STATE OF TEXAS
JORDAN ZYLBERBERG
142350
LICENSED PROFESSIONAL ENGINEER
9/24/26

0-C-17
SHEET NO. 27 OF 230

C:\Users\hc\DC\ACCDocs\Quiddity – Water-\0A651-0021-02 _ WILBARGER WWTP EXP. 1.5 MGD\Project Files\PLANS\CIVIL YP.dwg, Sep 23, 2026 – 5:39pm, hc

0 1 2 3 4 5 ORIGINAL SCALE IN INCHES FOR REDUCED PLANS

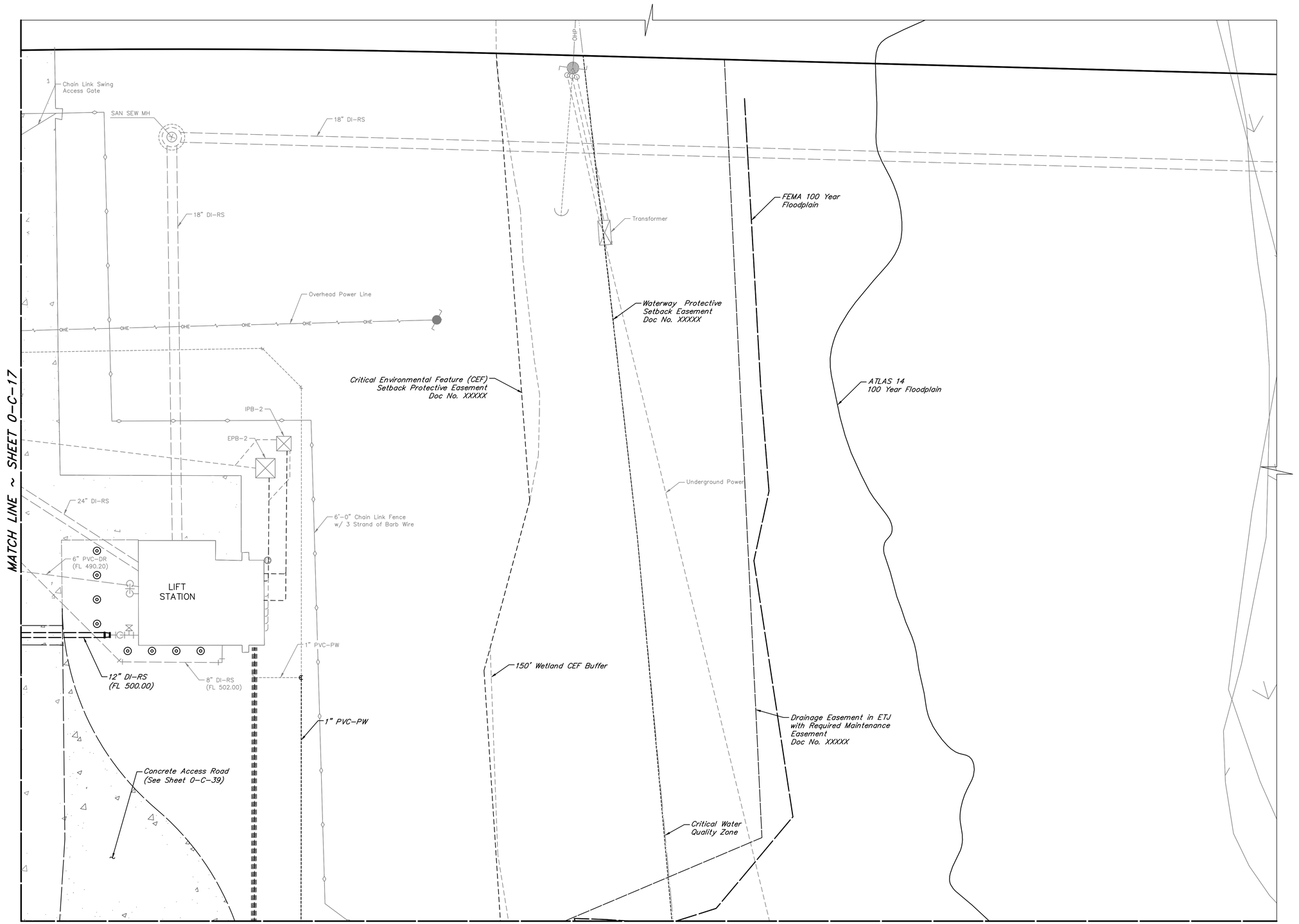

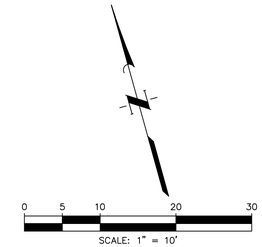

NOTES:

1. Existing flow lines are based on best available record drawings. Contractor shall field verify existing conditions prior to beginning work and notify engineer of any conflicts.
2. Maintain a minimum 6-inch clearance between all piping and duct bank.
3. Small diameter fittings are not labeled.

NO.	DATE	REVISIONS	APP.

WILBARGER CREEK M.U.D. No. 2
TRAVIS COUNTY, TEXAS

WASTEWATER TREATMENT PLANT EXPANSION TO 1.5 MGD

YARD PIPING PLAN – SHEET 2 OF 6

QUIDDITY
Texas Board of Professional Engineers and Land Surveyors Reg. No. F-23290
912 South Capital of Texas Hwy, Suite 300 • Austin, TX 78746 • 512.441.9493

SCALE:	1"=10'	DGN. BY:	JCP
DATE:	SEPTEMBER 2026	DWN. BY:	JSTRUHAR
JOB NO.	0A651-0021-02	DWG. NO.	
SUBMITTED:		SURV. BY:	
		F.B. NO.	

STATE OF TEXAS
JORDAN ZYLBERBERG
142350
LICENSED PROFESSIONAL ENGINEER
9/24/26

0-C-18
SHEET NO. 28 OF 230

C:\Users\hc\DC\ACCDocs\Quiddity – Water-\0A651-0021-02 _ WILBARGER WWTP EXP. 1.5 MGD\Project Files\PLANS\CIVIL YP.dwg, Sep 23, 2026 – 5:41pm, hc

0 1 2 3 4 5 ORIGINAL SCALE IN INCHES FOR REDUCED PLANS

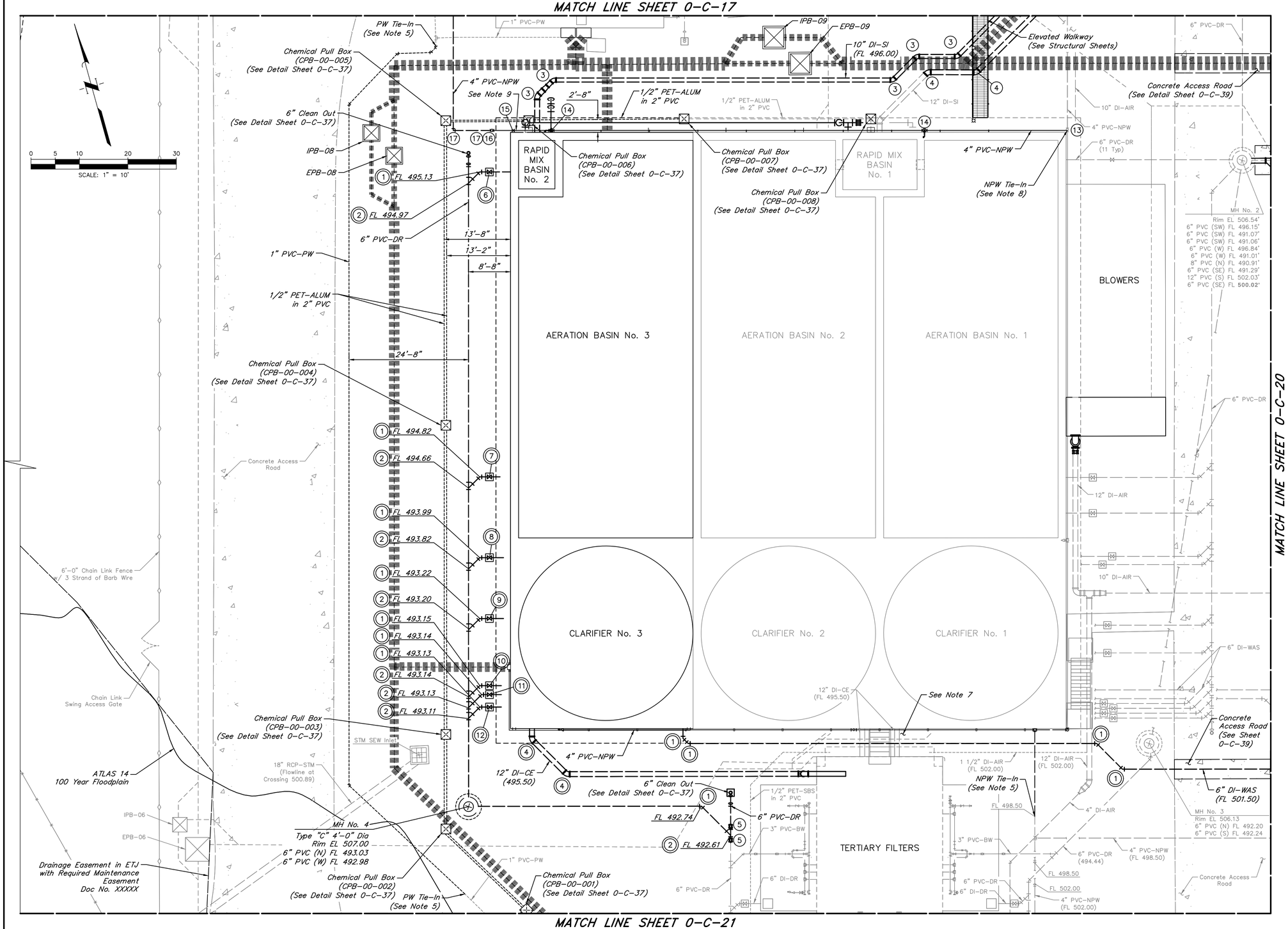

VALVES, FITTINGS, AND ACCESSORIES SCHEDULE

No.	DESCRIPTION
1	6" 45° Bend, MJ
2	6" Wye, MJ
3	10" 45° Bend, MJ
4	12" 45° Bend, MJ
5	6" Sleeve Coupling
6	6" Plug Valve, (PV-05-301) w/ Valve Box
7	6" Plug Valve, (PV-05-302) w/ Valve Box
8	6" Plug Valve, (PV-05-303) w/ Valve Box
9	6" Plug Valve, (PV-06-301) w/ Valve Box
10	6" Plug Valve, (PV-06-302) w/ Valve Box
11	6" Plug Valve, (PV-06-303) w/ Valve Box
12	6" Plug Valve, (PV-06-304) w/ Valve Box
13	4" Tee, PO
14	4" x 1" Tee, PO
15	4" Butterfly Valve, (BFV-15-001)
16	4" 90° Bend, PO
17	4" 90° Bend, MJ

◎ Indicates Restrained Valve or Fitting

NOTES:

1. Existing flow lines are based on best available record drawings. Contractor shall field verify existing conditions prior to beginning work and notify engineer of any conflicts.
2. All buried valves shall have a valve box per detail on sheet 0-C-36.
3. Maintain a minimum 6-inch clearance between all piping and duct bank.
4. Small diameter fittings are not labeled.
5. Contractor to field verify potable and non-potable water piping depth and tie-in and maintain flow line for proposed piping.
6. Fitting shall be rotated to modify pipe flow line as noted.
7. Subsurface construction occurring in the narrow open space located between the Clarifier Structure and the Tertiary Filter Structure shall be be dug by hand only.
8. Cut existing above ground PVC for tie-in.
9. Butterfly valve to be installed above ground. Contractor shall 90 underground following valve.

NO.	DATE	REVISIONS	APP.

WILBARGER CREEK M.U.D. No. 2
TRAVIS COUNTY, TEXAS

WASTEWATER TREATMENT PLANT EXPANSION TO 1.5 MGD

YARD PIPING PLAN – SHEET 3 OF 6

QUIDDITY
Texas Board of Professional Engineers and Land Surveyors Reg. No. F-23290
912 South Capital of Texas Hwy, Suite 300 • Austin, TX 78746 • 512.441.9493

SCALE: 1"=10' DGN. BY: JCP
DATE: SEPTEMBER 2026 DWN. BY: JSTRUHAR
JOB NO. 0A651-0021-02 DWG. NO.
SUBMITTED: SURV. BY:
F.B. NO.

STATE OF TEXAS
JORDAN ZYLBERBERG
142350
LICENSED PROFESSIONAL ENGINEER
9/24/26

0-C-19
SHEET NO. 29 OF 230

C:\Users\hc\DC\ACCDocs\Quiddity – Water-\0A651-0021-02 _ WILBARGER WWTP EXP. 1.5 MGD\Project Files\PLANS\CIVIL YP.dwg, Sep 23, 2026 – 5:43pm, hc

0 1 2 3 4 5 ORIGINAL SCALE IN INCHES FOR REDUCED PLANS

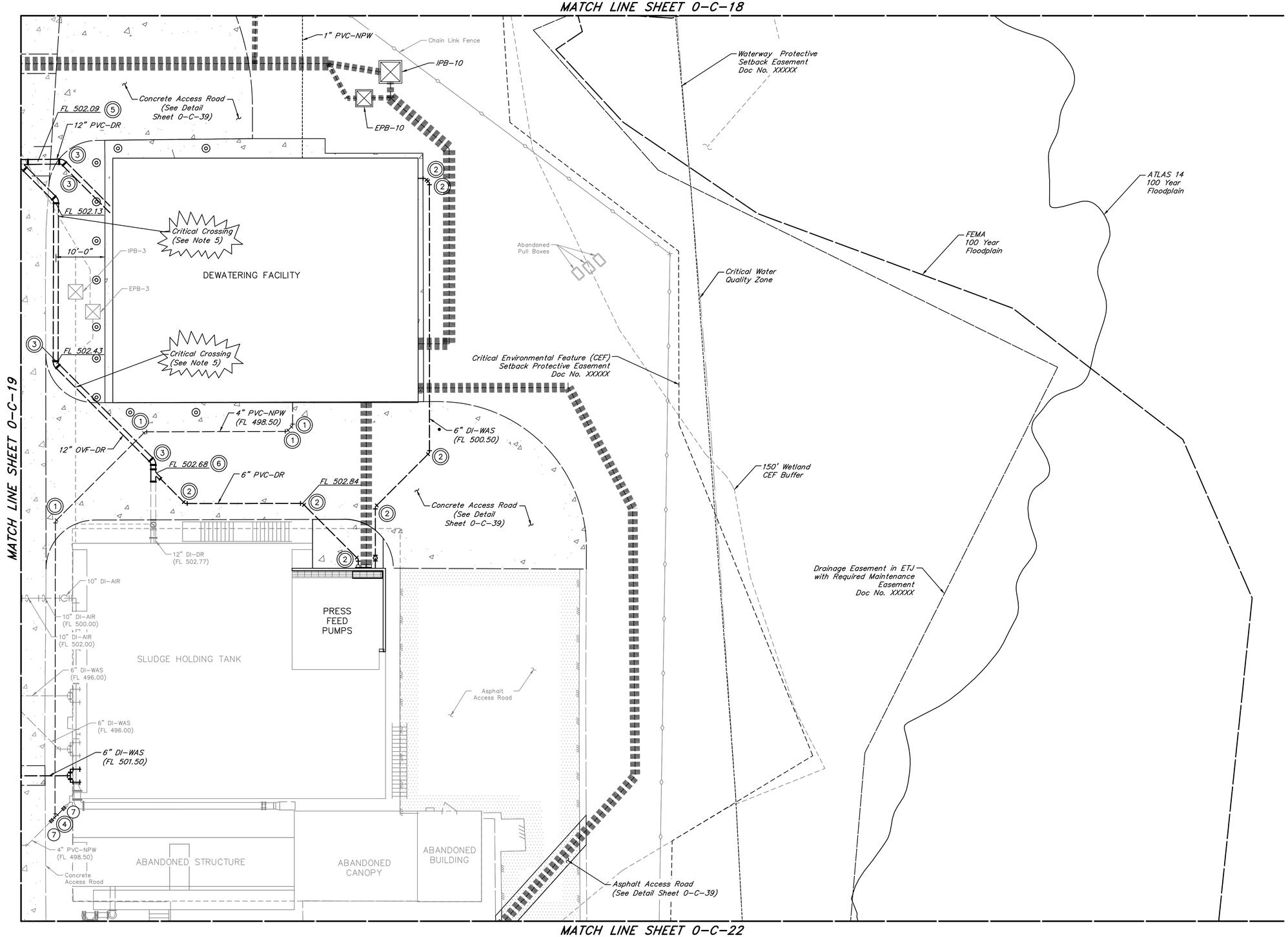

0 5 10 20 30
SCALE: 1" = 10'

VALVES, FITTINGS, AND ACCESSORIES SCHEDULE

No.	DESCRIPTION
1	4" 45° Bend, MJ
2	6" 45° Bend, MJ
3	12" 45° Bend, MJ
4	6" Wye, MJ
5	12" Wye, MJ
6	12"x6" Wye, MJ
7	4" Sleeve Coupling

◎ Indicates Restrained Valve or Fitting

NOTES:

1. Existing flow lines are based on best available record drawings. Contractor shall field verify existing conditions prior to beginning work and notify engineer of any conflicts.
2. All buried valves shall have a valve box per detail on sheet 0-C-32.
3. Maintain a minimum 6-inch clearance between all piping and duct bank.
4. Small diameter fittings are not labeled.
5. Contractor to confirm location and depth of existing ductbank at proposed pipe crossing within the first 30 days of mobilizing.

NO.	DATE	REVISIONS	APP.

WILBARGER CREEK M.U.D. No. 2
TRAVIS COUNTY, TEXAS

WASTEWATER TREATMENT PLANT EXPANSION TO 1.5 MGD

YARD PIPING PLAN – SHEET 4 OF 6

QUIDDITY
Texas Board of Professional Engineers and Land Surveyors Reg. No. F-23290
912 South Capital of Texas Hwy, Suite 300 • Austin, TX 78746 • 512.441.9493

SCALE:	1"=10'	DGN. BY:	JCP
DATE:	SEPTEMBER 2026	DWN. BY:	JSTRUHAR
JOB NO.	0A651-0021-02	DWG. NO.	
SUBMITTED:		SURV. BY:	
		F.B. NO.	

STATE OF TEXAS
JORDAN ZYLBERBERG
142350
LICENSED PROFESSIONAL ENGINEER
9/24/26

0-C-20
SHEET NO. 30 OF 230

C:\Users\hc\DC\ACCDocs\Quiddity – Water-\0A651-0021-02 _ WILBARGER WWTP EXP. 1.5 MGD\Project Files\PLANS\CIVIL YP.dwg, Sep 23, 2026 – 5:46pm, hc

0 1 2 3 4 5 ORIGINAL SCALE IN INCHES FOR REDUCED PLANS

MATCH LINE SHEET 0-C-19

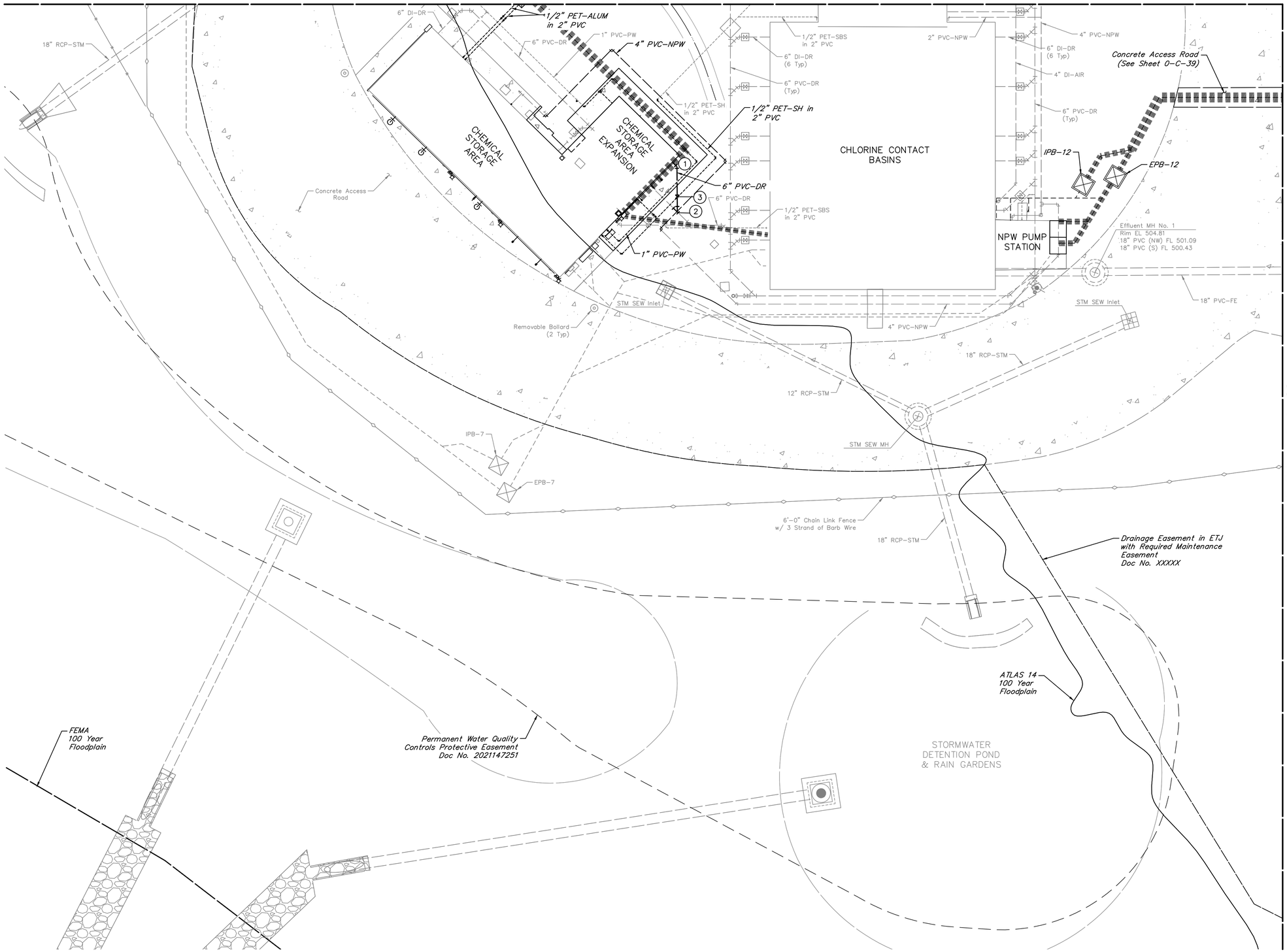

MATCH LINE SHEET 0-C-22

0 5 10 20 30
SCALE: 1" = 10'

VALVES, FITTINGS, AND ACCESSORIES SCHEDULE

No.	DESCRIPTION
1	6" 45° Bend, MJ
2	6" Wye, MJ
3	6" Plug Valve

◎ Indicates Restrained Valve or Fitting

NOTES:

1. Existing flow lines are based on best available record drawings. Contractor shall field verify existing conditions prior to beginning work and notify engineer of any conflicts.
2. All buried valves shall have a valve box per detail on sheet 0-C-32.
3. Maintain a minimum 6-inch clearance between all piping and duct bank.
4. Small diameter fittings are not labeled.

NO.	DATE	REVISIONS	APP.

WILBARGER CREEK M.U.D. No. 2
TRAVIS COUNTY, TEXAS

WASTEWATER TREATMENT PLANT EXPANSION TO 1.5 MGD

YARD PIPING PLAN – SHEET 5 OF 6

QUIDDITY
Texas Board of Professional Engineers and Land Surveyors Reg. No. F-23290
912 South Capital of Texas Hwy, Suite 300 • Austin, TX 78746 • 512.441.9493

SCALE: 1"=10' DGN. BY: JCP
DATE: SEPTEMBER 2026 DWN. BY: JSTRUHAR
JOB NO. 0A651-0021-02 DWG. NO.
SUBMITTED: SURV. BY:
F.B. NO.

STATE OF TEXAS
JORDAN ZYLBERBERG
142350
LICENSED PROFESSIONAL ENGINEER
9/24/26

0-C-21
SHEET NO. 31 OF 230

C:\Users\hc\DC\ACCDocs\Quiddity – Water-\0A651-0021-02 _ WILBARGER WWTP EXP. 1.5 MGD\Project Files\PLANS\CIVIL YP.dwg, Sep 23, 2026 – 5:48pm, hc

0 1 2 3 4 5 ORIGINAL SCALE IN INCHES FOR REDUCED PLANS

MATCH LINE SHEET 0-C-20

MATCH LINE SHEET 0-C-21

Asphalt Access Road (See DetailSheet 0-C-39)

IPB-11

EPB-11

Concrete Access Road (See Sheet 0-C-39)

18" PVC-STM

Gravel Access Road

Exist Asphalt Access Road

Critical Water Quality Zone

Exist Access Gate

Concrete Access Road

Effluent MH No. 2
Rim EL 505.10
18" PVC (NW) FL 499.96
18" PVC (W) FL 500.43
18" PVC (SE) FL 499.80

6'-0" Chain Link Fence w/ 3 Strand of Barb Wire

Critical Environmental Feature (CEF) Setback Protective Easement Doc No. XXXXX

Waterway Protective Setback Easement Doc No. XXXXX

FEMA 100 Year Floodplain

Outfall

STORMWATER DETENTION POND & RAIN GARDENS

Drainage Easement in ETJ with Required Maintenance Easement Doc No. XXXXX

ATLAS 14 100 Year Floodplain

0 5 10 20 30
SCALE: 1" = 10'

NOTES:

1. Existing flow lines are based on best available record drawings. Contractor shall field verify existing conditions prior to beginning work and notify engineer of any conflicts.
2. Maintain a minimum 6-inch clearance between all piping and duct bank.

NO.	DATE	REVISIONS	APP.

WILBARGER CREEK M.U.D. No. 2
TRAVIS COUNTY, TEXAS

WASTEWATER TREATMENT PLANT EXPANSION TO 1.5 MGD

YARD PIPING PLAN - SHEET 6 OF 6

QUIDDITY
Texas Board of Professional Engineers and Land Surveyors Reg. No. F-23290
912 South Capital of Texas Hwy, Suite 300 • Austin, TX 78746 • 512.441.9493

SCALE: 1"=10'	DGN. BY: JCP
DATE: SEPTEMBER 2026	DWN. BY: JSTRUHAR
JOB NO. 0A651-0021-02	DWG. NO.
SUBMITTED:	SURV. BY:
	F.B. NO.

STATE OF TEXAS
JORDAN ZYLBERBERG
142350
LICENSED PROFESSIONAL ENGINEER
9/24/26

0-C-22
SHEET NO. 32 OF 230

C:\Users\hc\DC\ACCDocs\Quiddity - Water-\0A651-0021-02 _ WILBARGER WWTP EXP. 1.5 MGD\Project Files\PLANS\CIVIL YP.dwg, Sep 23, 2026 - 5:51pm, hc

0 1 2 3 4 5 ORIGINAL SCALE IN INCHES FOR REDUCED PLANS

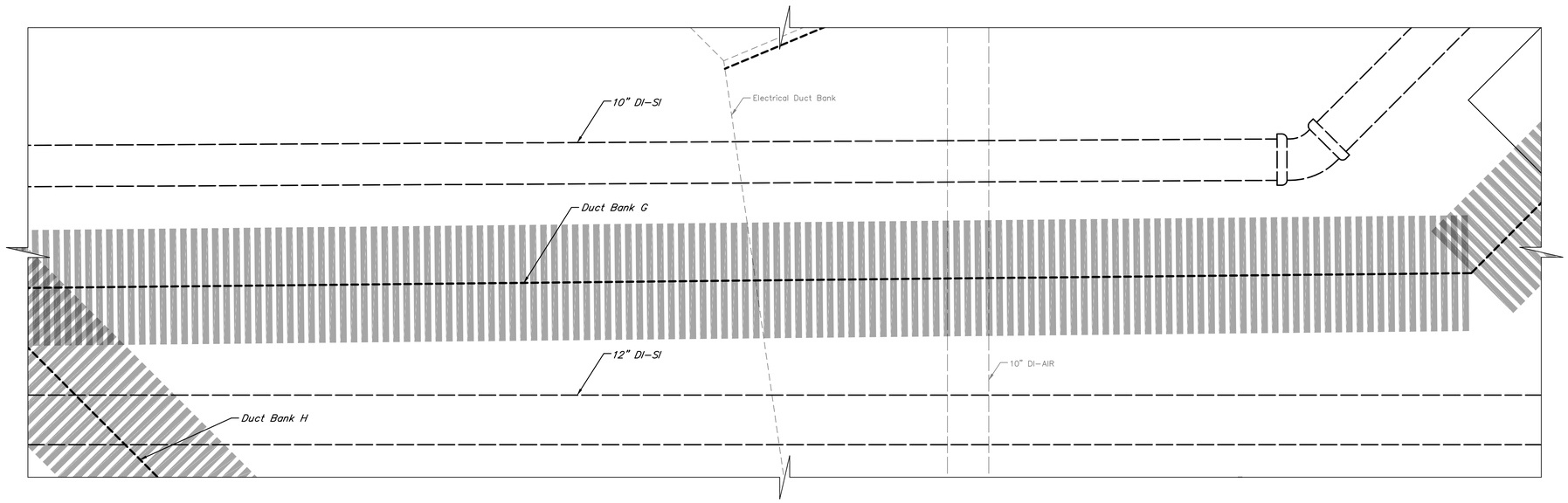

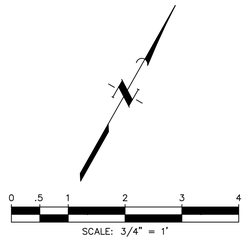

NOTES:

1. Contractor to confirm location and depth of existing piping duct bank prior to installation of proposed piping.

ITEMS OF WORK	
NO.	DESCRIPTION
1	Maintain a minimum cover of 2'-0" throughout duct bank run (Typ).
2	Duct Bank "G" begins to slope down to reach elevation suitable to maintain 1'-0" clearance from existing 10" DI-AIR (FL 502.00) Pipe.
3	Duct Bank "G" begins to slope up until reaching elevation to maintain a minimum of 2'-0" cover.

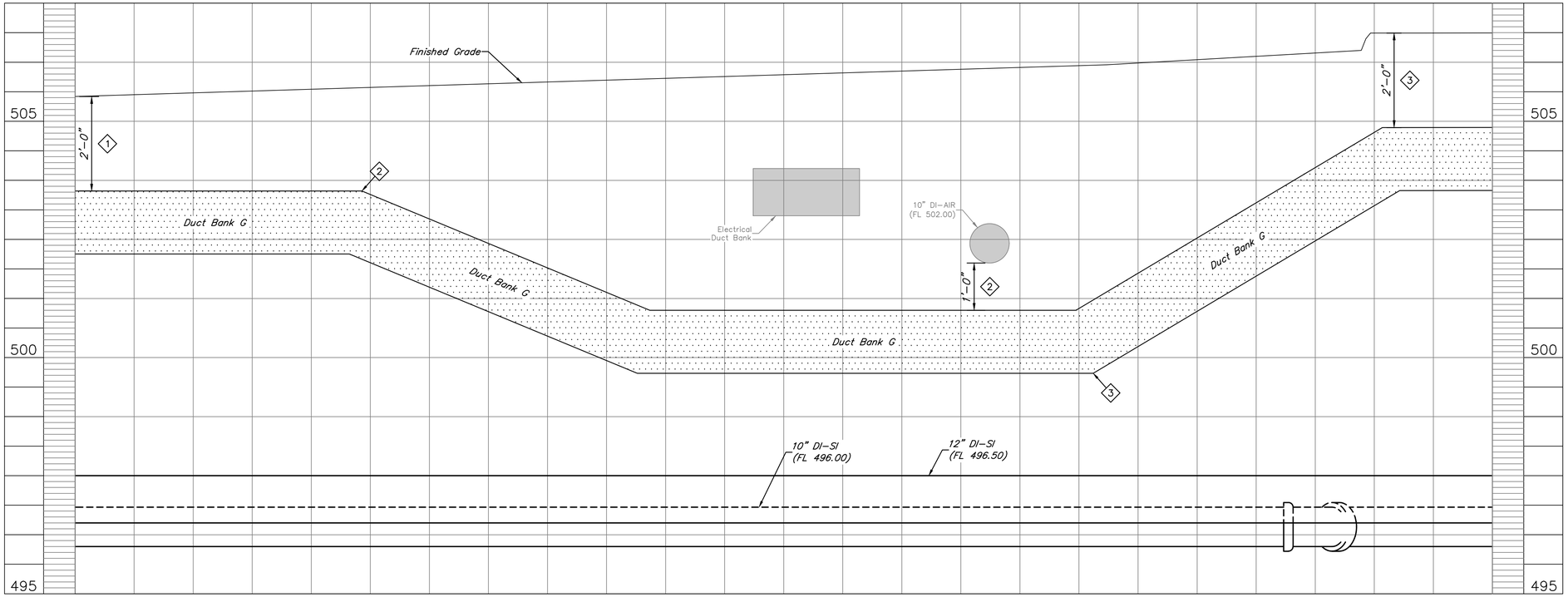

A 0-C-16 CROSS SECTION
SCALE: 3/4"=1'-0"

For Electrical Items Only:

STATE OF TEXAS
BAO LE THIEN TRAN
149385
LICENSED PROFESSIONAL ENGINEER
03/10/2026

NO.	DATE	REVISIONS	APP.

WILBARGER CREEK M.U.D. No. 2
TRAVIS COUNTY, TEXAS

WASTEWATER TREATMENT PLANT
EXPANSION TO 1.5 MGD

YARD PIPING PLAN
SECTION A

QUIDDITY
Texas Board of Professional Engineers and Land Surveyors Reg. No. F-23290
912 South Capital of Texas Hwy, Suite 300 • Austin, TX 78746 • 512.441.9493

SCALE:	3/4"=1'	DGN. BY:	JCP
DATE:	FEBRUARY 2026	DWN. BY:	SSOMERS
JOB NO.	0A651-0021-02	DWG. NO.	
SUBMITTED:		SURV. BY:	
		F.B. NO.	

STATE OF TEXAS
JORDAN ZYLBERBERG
142350
LICENSED PROFESSIONAL ENGINEER
3/10/26

0-C-23
SHEET NO. 33 OF 230

C:\Users\tdobbins\DC\ACCDocs\Quiddity - Water-\0A651-0021-02 _ WILBARGER WWTP EXP. 1.5 MGD\Project Files\PLANS\CIVIL YP - SEC.dwg, Feb 19, 2026 - 3:48pm, tdobbins

0 1 2 3 4 5 ORIGINAL SCALE IN INCHES FOR REDUCED PLANS

AUSTIN AREA TERMINAL RAILROAD
(F.K.A. SOUTHERN PACIFIC RAILROAD)
(150' R.O.W.)

SAW-CUT NOTE:
SAW-CUT EXISTING CONCRETE PAVEMENT AT FULL DEPTH. EXPOSE 12" OF REINFORCING STEEL. IF NO REINFORCING STEEL EXISTS, USE HORIZONTAL DOWELS. HORIZONTAL DOWELS SHALL BE #4 BARS 24" LONG C-C, DRILLED AND EMBEDDED 12" INTO THE CENTER OF THE EXISTING PAVEMENT WITH "SUPER PR-ROK" OR ENGINEER APPROVED EQUAL.

ORIGINAL IMPERVIOUS COVER	0.55 ACRES
EXISTING IMPERVIOUS COVER	1.63 ACRES
PROPOSED IMPERVIOUS COVER	1.84 ACRES

LEGEND:

EXISTING	PROPOSED	
		CHAIN LINK FENCE
		ASPHALT PAVEMENT
		CONCRETE PAVEMENT
		TOP OF BANK
		CRITICAL WATER QUALITY ZONE
		150' WETLAND CEF BUFFER
		PLAT BOUNDARY
		EASEMENT

0 5 10 20 40 60
SCALE: 1" = 20'

Permanent Water Quality Control Easement Doc No. XXXXX

Fire Tank (See Sheet 0-R-2)

6'-0" Chain Link Fence w/ 3 Strand Barb Wire

Remove and Replace Concrete as Needed, Not to Exceed 8' Width (See Note This Sheet)

Basin Pump

Concrete Access Road

Remove and Replace Concrete as Needed, Not to Exceed 4' Width (See Note This Sheet)

Gen Set

Peak Shaving Basin

Peak Shaving Basin

Basin Pump

Elevated Headworks

Electrical Bldg.

41.23'

28.50'

R55.00'

2' Sawcut ~ Remove and Replace 100 LF (See Note This Sheet)

32.00'

Remove and Replace Concrete as Needed, Not to Exceed 4' Width (See Note This Sheet)

Clarifier & Aeration Basin

Clarifiers & Aeration Basins

Concrete Access Road (See Sheet 0-C-39 For Details)

R55.00'

198.71'

24.72'

R10.00'

30.21'

61.14'

Blowers

Dewatering Facility

MATCH LINE ~ SEE SHEET 0-C-25

Remove and Replace Concrete as Needed, Not to Exceed 6' Width (See Note This Sheet)

Critical Environmental Feature (CEF) Setback Protective Easement Doc No. XXXXX

Waterway Protective Setback Easement Doc No. XXXXX

CRITICAL WATER QUALITY ZONE

Drainage Easement in ETJ with Required Maintenance Easement Doc No. XXXXX

150' WETLAND CEF BUFFER

FEMA 100 YEAR FLOODPLAIN

Point Table		
Point #	Northing	Easting
1	3177532.3706	10099238.3173
2	3177539.8391	10099192.8747
3	3177547.4183	10099147.1768
4	3177545.7796	10099141.2622
5	3177516.5769	10099148.9982
6	3177503.0524	10099143.0111

CONTRACTOR TO VERIFY ELEVATION AND LOCATION OF ALL EXISTING UTILITIES PRIOR TO COMMENCEMENT OF ANY NEW CONSTRUCTION

TEXAS811 NOTIFICATION SYSTEM
CALL BEFORE YOU DIG!!!
www.texas811.org
Texas811 or 1-800-545-6005

NO.	DATE	REVISIONS	APP.

WILBARGER CREEK M.U.D. No. 2
TRAVIS COUNTY, TEXAS

WASTEWATER TREATMENT PLANT EXPANSION TO 1.5 MGD

OVERALL PAVING PLAN - SHEET 1 OF 2

QUIDDITY
Texas Board of Professional Engineers and Land Surveyors Reg. No. F-23290
912 South Capital of Texas Hwy, Suite 300 • Austin, TX 78746 • 512.441.9493

SCALE:	1" = 20'	DGN. BY:	HLC
DATE:	SEPTEMBER 2026	DWN. BY:	HLC
JOB NO.	0A651-0021-02	DWG. NO.	
SUBMITTED:		SURV. BY:	
		F.B. NO.	

STATE OF TEXAS
RYAN W. LeMAIRE
143835
LICENSED PROFESSIONAL ENGINEER
09/24/2026

0-C-24
SHEET NO. 34 OF 230

C:\Users\hc\DC\ACCDocs\Quiddity - Water-\0A651-0021-02 _ WILBARGER WWTP EXP. 1.5 MGD\Project Files\PLANS\SITE\SITE 10-29.dwg, Sep 23, 2026 - 5:59pm, hc

0 1 2 3 4 5 ORIGINAL SCALE IN INCHES FOR REDUCED PLANS

ORIGINAL IMPERVIOUS COVER	0.55 ACRES
EXISTING IMPERVIOUS COVER	1.63 ACRES
PROPOSED IMPERVIOUS COVER	1.84 ACRES

SAW-CUT NOTE:
SAW-CUT EXISTING CONCRETE PAVEMENT AT FULL DEPTH. EXPOSE 12" OF REINFORCING STEEL. IF NO REINFORCING STEEL EXISTS, USE HORIZONTAL DOWELS. HORIZONTAL DOWELS SHALL BE #4 BARS 24" LONG C-C, DRILLED AND EMBEDDED 12" INTO THE CENTER OF THE EXISTING PAVEMENT WITH "SUPER PR-ROK" OR ENGINEER APPROVED EQUAL.

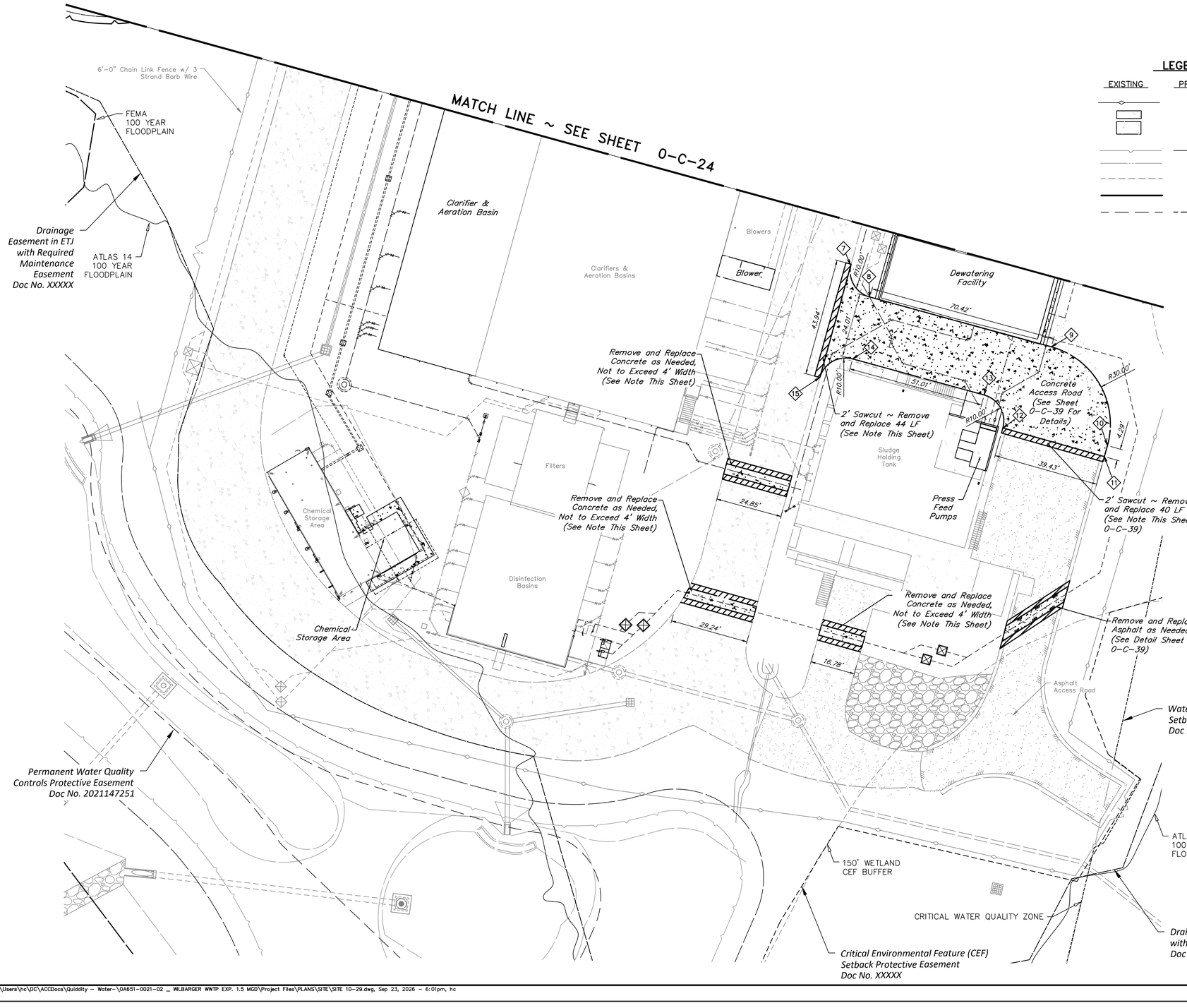

LEGEND:

EXISTING	PROPOSED	
		CHAIN LINK FENCE
		ASPHALT PAVEMENT
		CONCRETE PAVEMENT
		TOP OF BANK
		CRITICAL WATER QUALITY ZONE
		150' WETLAND CEF BUFFER
		PLAT BOUNDARY
		EASEMENT

0 5 10 20 40 60
SCALE: 1" = 20'

CONTRACTOR TO VERIFY ELEVATION AND LOCATION OF ALL EXISTING UTILITIES PRIOR TO COMMENCEMENT OF ANY NEW CONSTRUCTION

TEXAS811 NOTIFICATION SYSTEM
CALL BEFORE YOU DIG!!!
www.texas811.org
Texas811 or 1-800-545-6005

Point Table

Point #	Northing	Easting
7	3177493.2757	10099110.1054
8	3177500.2819	10099097.8384
9	3177568.2002	10099079.2200
10	3177589.1877	10099042.3060
11	3177588.0134	10099038.1837
12	3177550.0542	10099048.9022

Point Table

Point #	Northing	Easting
13	3177543.0613	10099061.2172
14	3177493.8646	10099074.7035
15	3177481.5878	10099067.7434

NO.	DATE	REVISIONS	APP.

WILBARGER CREEK M.U.D. No. 2
TRAVIS COUNTY, TEXAS

WASTEWATER TREATMENT PLANT EXPANSION TO 1.5 MGD
OVERALL PAVING PLAN - SHEET 2 OF 2

QUIDDITY
Texas Board of Professional Engineers and Land Surveyors Reg. No. F-23290
912 South Capital of Texas Hwy, Suite 300 • Austin, TX 78746 • 512.441.9493

SCALE: 1" =20'
DATE: SEPTEMBER 2026
JOB NO. 0A651-0021-02
SUBMITTED:
DGN. BY: HLC
DWN. BY: HLC
DWG. NO.
SURV. BY:
F.B. NO.

STATE OF TEXAS
RYAN W. LeMARRE
143835
LICENSED PROFESSIONAL ENGINEER
09/24/2026

0-C-25
SHEET NO. 35 OF 230

C:\Users\hc\DC\ACCDocs\Quiddity - Water-\0A651-0021-02 _ WILBARGER WWTP EXP. 1.5 MGD\Project Files\PLANS\SITE\SITE 10-29.dwg, Sep 23, 2026 - 6:01pm, hc

ORIGINAL SCALE IN INCHES FOR REDUCED PLANS

0 1 2 3 4 5

Permanent Water Quality Controls Protective Easement Doc No. XXXXX

Fire Tank (See Sheet 0-R-2)

RAINGARDEN PLAN & SECTION (See Sheet 0-C-31)

Critical Environmental Feature (CEF) Setback Protective Easement Doc No. XXXXX

Basin Pump (See Sheet 4-M-6)

Waterway Protective Setback Easement Doc No. XXXXX

FEMA 100 YEAR FLOODPLAIN

ATLAS 14 100 YEAR FLOODPLAIN

Drainage Easement in ETJ with Required Maintenance Easement Doc No. XXXXX

Permanent Water Quality Controls Protective Easement Doc No. 2021147251

Gen Set

Basin Pump

Peak Shaving Basin Elev (See Sheet 4-M-4)

Peak Shaving Basin

Electrical Bldg.

Elevated Headworks

Clarifier & Aeration Basin (See Sheet 5-M-4)

Clarifiers & Aeration Basins

Blowers

Dewatering Facility (See Sheet 14-M-4)

EX. GRATE INLET TO BE REMOVED

EX. HDPE STORM PIPE TO BE REMOVED

142 LF of 0.50% Swale

95 LF of 0.30% Swale

65 LF of 1.68% Swale

84 LF of 1.82% Swale

EX. 100 LF ~ 18" RCP @ 0.50%

150' WETLAND CEF BUFFER

CRITICAL WATER QUALITY ZONE

NG 505.81 (ME) FG 506.41 (ME) FG 506.42 (ME) FG 506.40 NG 506.15 (ME) NG 506.22 (ME) NG 506.06 (ME)
NG 505.77 (ME) FG 506.30 FG 506.92 (ME) FG 506.90 TP 506.43 (ME) TP 506.56 (ME) NG 506.29 (ME)
TP 506.05 (ME) NG 505.59 (ME) TP 505.55 (ME) NG 506.32 (ME) NG 506.48 (ME) NG 506.39 (ME) TP 506.83 (ME) TP 506.86 (ME) TP 506.88 (ME)
TP 506.00 (ME) TP 505.53 (ME) NG 505.45 (ME) TG 505.20 FL 505.28 FG 506.10 FG 506.00 (ME) NG 506.09 NG 506.21 (ME) NG 506.36 (ME) NG 506.24 (ME) NG 505.84 (ME)
FL 505.31 NG 505.56 (ME) FL 505.64 FG 506.00 FG 506.17 (ME) NG 505.82 (ME) TP 506.35 (ME) FL 505.91 TP 507.28 (ME) TP 507.40
TP 506.90 (ME) TP 506.28 (ME) NG 506.01 (ME) TP 506.62 (ME) TP 506.59 (ME) NG 506.21 TP 506.84 (ME) TP 507.00 TP 507.05 TS 505.80 TS 505.82 NG 505.62 (ME) 507.22
TP 506.53 (ME) TP 506.50 (ME) TP 506.10 (ME) FG 506.09 FG 506.03 (ME) Blower (See Sheet 9-M-3) FG 506.16 (ME) TP 506.42 FG 506.00 TP 507.00 TS 505.62 FF 507.00 (See Sheet 14-S-2) NG 504.68 (ME)
NG 505.64 (ME) FL 504.93 TG 504.37 FG 506.00 FL 504.73 NG 505.45 (ME) NG 506.38 (ME) NG 506.06 (ME) NG 506.19 (ME) NG 506.53 (ME) FL 505.43 NG 506.24 (ME) NG 505.67 (ME) TP 506.38 TP 506.64 TP 506.28 TP 505.92 TP 505.89 (ME) TP 505.19 (ME) TP 505.32 (ME) TP 505.28 (ME) TP 505.57 (ME) TP 505.54 (ME) FG 506.06 NG 506.14 (ME) NG 506.15 (ME) TP 505.98 TP 506.12 TP 505.60 TP 505.52 (ME) NG 503.74 (ME) NG 503.85 (ME) NG 504.00 (ME)

FEMA 100 YEAR FLOODPLAIN

Drainage Easement in ETJ with Required Maintenance Easement Doc No. XXXXX

MATCH LINE ~ SEE SHEET 0-C-27

LEGEND:

EXISTING	PROPOSED	
		DRAINAGE SWALE CENTERLINE
100.0	125	CONTOUR
		SLOPE TO DRAIN
		TOP OF BERM
		EDGE OF CONCRETE PAVEMENT
		EDGE OF ASPHALT PAVEMENT
	TP 504.92	TOP OF PAVEMENT ELEVATION
XX.XX (ME)	(ME)	MATCH EXISTING GRADE
	FG 504.92	FINISHED GRADE ELEVATION
	TS 504.92	TOP OF SIDEWALK ELEVATION
NG 504.23		EXIST NATURAL GROUND ELEVATION
		GRADING LIMITS
		EASEMENT

0 5 10 20 40 60
SCALE: 1" = 20'

CONTRACTOR TO VERIFY ELEVATION AND LOCATION OF ALL EXISTING UTILITIES PRIOR TO COMMENCEMENT OF ANY NEW CONSTRUCTION

TEXAS811 NOTIFICATION SYSTEM
CALL BEFORE YOU DIG!!!
www.texas811.org
Texas811 or 1-800-545-6005

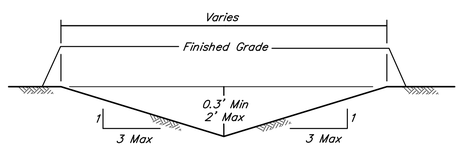

TYPICAL SWALE DETAIL
NOT TO SCALE

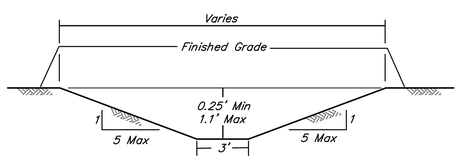

TYPICAL TRAPEZOIDAL SWALE DETAIL
SWALE A-A
NOT TO SCALE

NO.	DATE	REVISIONS	APP.

WILBARGER CREEK M.U.D. No. 2
TRAVIS COUNTY, TEXAS

WASTEWATER TREATMENT PLANT EXPANSION TO 1.5 MGD

OVERALL GRADING PLAN - SHEET 1 OF 2

QUIDDITY
Texas Board of Professional Engineers and Land Surveyors Reg. No. F-23290
912 South Capital of Texas Hwy, Suite 300 • Austin, TX 78746 • 512.441.9493

SCALE:	1" = 20'	DGN. BY:	HLC
DATE:	SEPTEMBER 2026	DWN. BY:	HLC
JOB NO.	0A651-0021-02	DWG. NO.	
SUBMITTED:		SURV. BY:	
		F.B. NO.	

STATE OF TEXAS
RYAN W. LeMAIRE
143835
LICENSED PROFESSIONAL ENGINEER
09/24/2026

0-C-26
SHEET NO. 36 OF 230

C:\Users\hc\DC\ACCDocs\Quiddity - Water-\0A651-0021-02 _ WILBARGER WWTP EXP. 1.5 MGD\Project Files\PLANS\SITE\SITE 10-29.dwg, Sep 23, 2026 - 6:01pm, hc

0 1 2 3 4 5 ORIGINAL SCALE IN INCHES FOR REDUCED PLANS

MATCH LINE ~ SEE SHEET 0-C-26

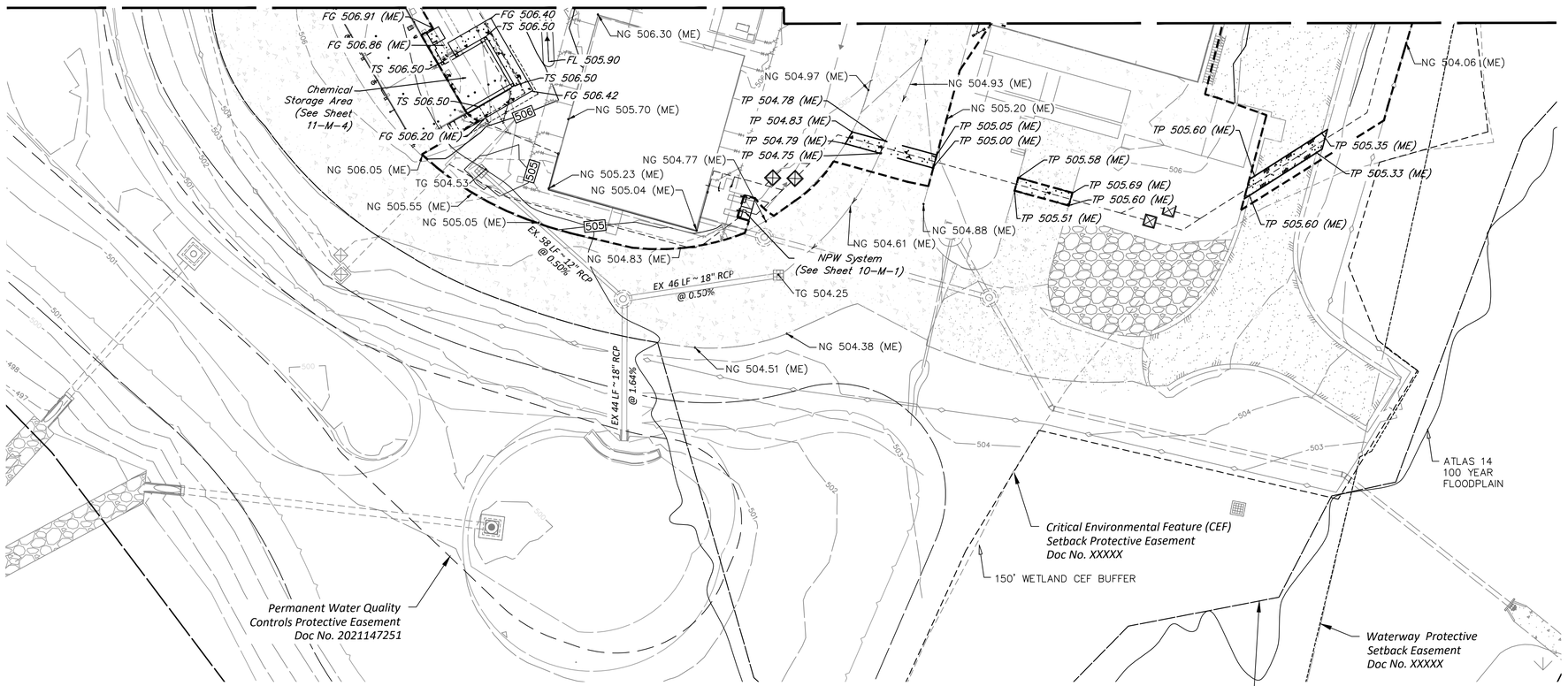

LEGEND:

EXISTING	PROPOSED	
		DRAINAGE SWALE CENTERLINE
100.0	125	CONTOUR
		SLOPE TO DRAIN
		TOP OF BERM
		EDGE OF CONCRETE PAVEMENT
		EDGE OF ASPHALT PAVEMENT
	TP 504.92	TOP OF PAVEMENT ELEVATION
XX.XX (ME)	(ME)	MATCH EXISTING GRADE
	FG 504.92	FINISHED GRADE ELEVATION
	TS 504.92	TOP OF SIDEWALK ELEVATION
NG 504.23		EXIST NATURAL GROUND ELEVATION
		GRADING LIMITS
		EASEMENT

0 5 10 20 40 60
SCALE: 1" = 20'

CONTRACTOR TO VERIFY ELEVATION AND LOCATION OF ALL EXISTING UTILITIES PRIOR TO COMMENCEMENT OF ANY NEW CONSTRUCTION

TEXAS811 NOTIFICATION SYSTEM
CALL BEFORE YOU DIG!!!
www.texas811.org
Texas811 or 1-800-545-6005

NO.	DATE	REVISIONS	APP.

WILBARGER CREEK M.U.D. No. 2
TRAVIS COUNTY, TEXAS

WASTEWATER TREATMENT PLANT EXPANSION TO 1.5 MGD

OVERALL GRADING PLAN – SHEET 2 OF 2

QUIDDITY
Texas Board of Professional Engineers and Land Surveyors Reg. No. F-23290
912 South Capital of Texas Hwy, Suite 300 • Austin, TX 78746 • 512.441.9493

SCALE: 1" = 20' DGN. BY: HLC
DATE: SEPTEMBER 2026 DWN. BY: HLC
JOB NO. 0A651-0021-02 DWG. NO.
SUBMITTED: SURV. BY:
F.B. NO.

STATE OF TEXAS
RYAN W. LeMARRE
143835
LICENSED PROFESSIONAL ENGINEER
09/24/2026

0-C-27
SHEET NO. 37 OF 230

C:\Users\hc\DC\ACCDocs\Quiddity - Water-\0A651-0021-02 _ WILBARGER WWTP EXP. 1.5 MGD\Project Files\PLANS\SITE\SITE 10-29.dwg, Sep 23, 2026 - 6:02pm, hc

ORIGINAL SCALE IN INCHES FOR REDUCED PLANS

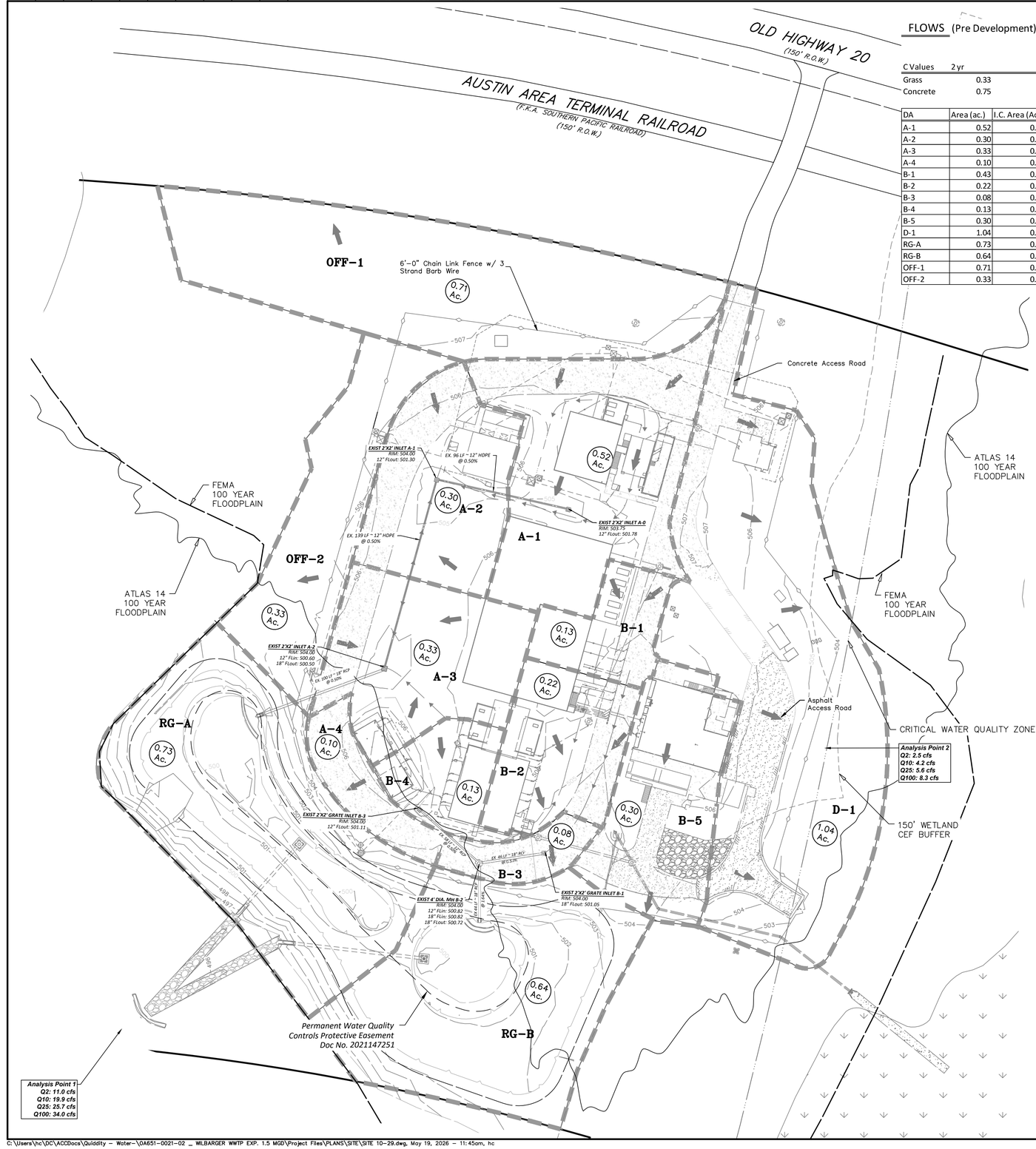

FLOWS (Pre Development)

C Values	2 yr	10 yr	25 yr	100 yr	500 yr
Grass	0.33	0.38	0.42	0.49	0.58
Concrete	0.75	0.83	0.88	0.97	1

Intensity Coefficients	2 yr	10 yr	25 yr	100 yr	500 yr
a	46.99	60.75	64.56	76.9	80.36
b	9.575	8.361	7.382	6.726	5.219
c	0.7517	0.7185	0.6814	0.6554	0.5979

Note
*Grass is assumed to be Fair Condition and Average Slope
*All Impervious Cover is assumed to be Concrete (Conservative Approach)

DA	Area (ac.)	I.C. Area (Ac.)	I.C. (%)	C2	C10	C25	C100	C500	Tc (min)	I2 (in/hr)	I10 (in/hr)	I25 (in/hr)	I100 (in/hr)	I500 (in/hr)	Q2 (cfs)	Q10 (cfs)	Q25 (cfs)	Q100 (cfs)	Q500 (cfs)
A-1	0.52	0.35	67.4%	0.61	0.68	0.73	0.81	0.86	5.02	6.27	9.42	11.61	15.31	20.00	2.00	3.35	4.42	6.49	8.99
A-2	0.30	0.20	66.4%	0.61	0.68	0.73	0.81	0.86	5.00	6.27	9.43	11.62	15.32	20.02	1.16	1.94	2.56	3.76	5.22
A-3	0.33	0.17	50.2%	0.54	0.61	0.65	0.73	0.79	5.00	6.27	9.43	11.62	15.32	20.02	1.12	1.90	2.51	3.71	5.25
A-4	0.10	0.10	100.0%	0.75	0.83	0.88	0.97	1.00	5.00	6.27	9.43	11.62	15.32	20.02	0.46	0.76	0.99	1.44	1.94
B-1	0.43	0.30	69.4%	0.62	0.69	0.74	0.82	0.87	11.35	4.78	7.13	8.77	11.53	15.00	1.27	2.11	2.77	4.05	5.58
B-2	0.22	0.13	58.6%	0.58	0.64	0.69	0.77	0.83	5.00	6.27	9.43	11.62	15.32	20.02	0.79	1.33	1.75	2.58	3.62
B-3	0.08	0.08	100.0%	0.75	0.83	0.88	0.97	1.00	5.00	6.27	9.43	11.62	15.32	20.02	0.36	0.60	0.78	1.14	1.53
B-4	0.13	0.05	43.6%	0.51	0.58	0.62	0.70	0.76	5.95	5.98	8.98	11.05	14.55	18.98	0.39	0.65	0.86	1.28	1.82
B-5	0.30	0.16	51.4%	0.55	0.61	0.66	0.74	0.80	12.32	4.62	6.89	8.47	11.15	14.50	0.77	1.28	1.69	2.50	3.51
D-1	1.04	0.32	30.2%	0.46	0.52	0.56	0.64	0.71	9.19	5.19	7.75	9.53	12.54	16.30	2.47	4.17	5.55	8.30	12.02
RG-A	0.73	0.00	0.0%	0.33	0.38	0.42	0.49	0.58	9.19	5.19	7.75	9.53	12.54	16.30	1.25	2.15	2.92	4.49	6.91
RG-B	0.64	0.00	0.0%	0.33	0.38	0.42	0.49	0.58	9.19	5.19	7.75	9.53	12.54	16.30	1.09	1.88	2.56	3.93	6.04
OFF-1	0.71	0.00	0.0%	0.33	0.38	0.42	0.49	0.58	12.32	4.62	6.89	8.47	11.15	14.50	1.08	1.86	2.52	3.87	5.96
OFF-2	0.33	0.00	0.0%	0.33	0.38	0.42	0.49	0.58	9.04	5.22	7.80	9.59	12.62	16.40	0.57	0.97	1.32	2.03	3.13

Tc (Pre Development)

Note
*Minimum Time of Concentration is 5 min per Austin Design Manual.

DA	Area (ac.)	L (ft)	n	Slope (ft/ft)	P	Tsheet	Tsc	Tc
A-1	0.52	172	0.059	0.016	4.06	4.54	0.47	5.02
A-2	0.30	84	0.060	0.024	4.06	3.41	0.00	5.00
A-3	0.33	50	0.082	0.020	4.06	3.09	0.00	5.00
A-4	0.10	35	0.015	0.014	4.06	0.68	0.00	5.00
B-1	0.43	215	0.056	0.002	4.06	9.40	1.96	11.35
B-2	0.22	65	0.071	0.008	4.06	4.96	0.00	5.00
B-3	0.08	42	0.015	0.202	4.06	0.27	0.00	5.00
B-4	0.13	160	0.091	0.022	4.06	5.62	0.33	5.95
B-5	0.30	140	0.150	0.009	4.06	11.97	0.35	12.32
D-1	1.04	279	0.150	0.023	4.06	8.23	0.97	9.19
RG-A	0.73	279	0.150	0.023	4.06	8.23	0.97	9.19
RG-B	0.64	279	0.150	0.023	4.06	8.23	0.97	9.19
OFF-1	0.71	140	0.150	0.009	4.06	11.97	0.35	12.32
OFF-2	0.33	251	0.150	0.023	4.06	8.23	0.82	9.04

Analysis Point 1 - Calculations Computed Through HEC-HMS 4.3

Storm Event	Existing Flow (CFS)	Proposed Flow (CFS)	Change (CFS)
2-Yr	11.0	10.6	-0.4
10-Yr	19.9	19.1	-0.8
25-Yr	25.7	24.8	-0.9
100-Yr	34.0	33.2	-0.8

Analysis Point 2 - Calculations Computed Through HEC-HMS 4.3

Storm Event	Existing Flow (CFS)	Proposed Flow (CFS)	Change (CFS)
2-Yr	2.5	2.3	-0.2
10-Yr	4.2	3.9	-0.3
25-Yr	5.6	5.2	-0.3
100-Yr	8.3	7.9	-0.4

LEGEND:

EXISTING

- EDGE OF CONCRETE PAVEMENT
- EDGE OF ASPHALT PAVEMENT
- DRAINAGE SWALE
- CHAIN LINK FENCE
- 100.0 CONTOUR
- TOP OF BERM
- SHEET FLOW ARROWS
- D-2 DRAINAGE AREA NAME
- 0.05 Ac. ACREAGE
- EXISTING DRAINAGE AREA BOUNDARY
- WETLAND CEF
- EASEMENT

0 10 20 40 80 120
SCALE: 1" = 40'

CONTRACTOR TO VERIFY ELEVATION AND LOCATION OF ALL EXISTING UTILITIES PRIOR TO COMMENCEMENT OF ANY NEW CONSTRUCTION

TEXAS811 NOTIFICATION SYSTEM
CALL BEFORE YOU DIG!!!
www.texas811.org
Texas811 or 1-800-545-6005

NO.	DATE	REVISIONS	APP.

WILBARGER CREEK M.U.D. No. 2
TRAVIS COUNTY, TEXAS

WASTEWATER TREATMENT PLANT EXPANSION TO 1.5 MGD

EXISTING DRAINAGE AREA MAP

QUIDDITY
Texas Board of Professional Engineers and Land Surveyors Reg. No. F-23290
912 South Capital of Texas Hwy, Suite 300 • Austin, TX 78746 • 512.441.9493

SCALE: 1" = 40' DGN. BY: HLC
DATE: MAY 2026 DWN. BY: HLC
JOB NO. 0A651-0021-02 DWG. NO.
SUBMITTED: SURV. BY:
F.B. NO.

STATE OF TEXAS
RYAN W. LeMARE
143835
LICENSED PROFESSIONAL ENGINEER
5/29/2026

0-C-28
SHEET NO. 38 OF 230

C:\Users\hc\DC\ACCDocs\Quiddity - Water-\0A651-0021-02 _ WILBARGER WWTP EXP. 1.5 MGD\Project Files\PLANS\SITE\SITE 10-29.dwg, May 19, 2026 - 11:45am, hc

ORIGINAL SCALE IN INCHES FOR REDUCED PLANS

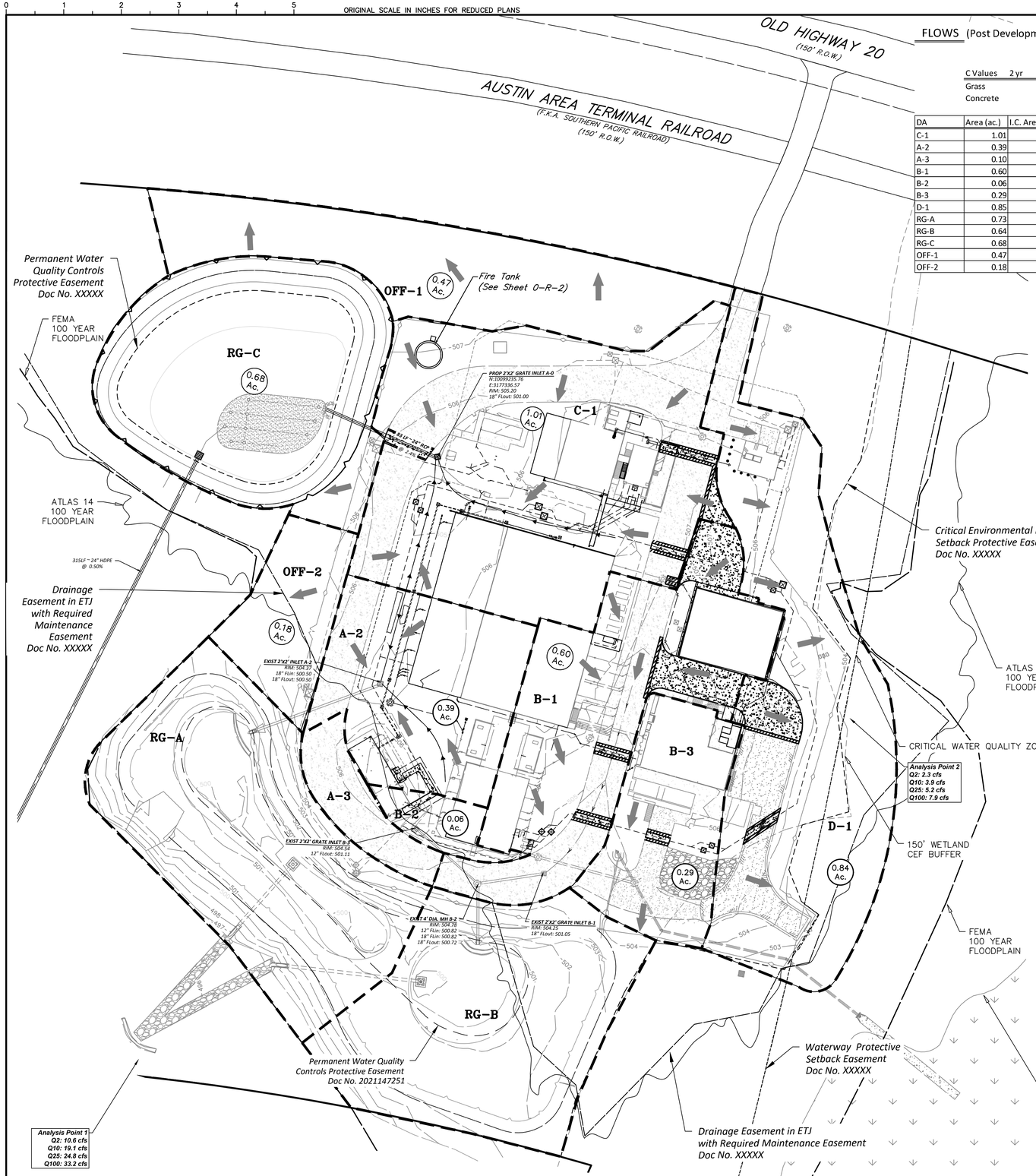

FLOWS (Post Development)

C Values	2 yr	10 yr	25 yr	100 yr	500 yr
Grass	0.33	0.38	0.42	0.49	0.58
Concrete	0.75	0.83	0.88	0.97	1

Intensity Coefficients	2 yr	10 yr	25 yr	100 yr	500 yr
a	46.99	60.75	64.56	76.9	80.36
b	9.575	8.361	7.382	6.726	5.219
c	0.7517	0.7185	0.6814	0.6554	0.5979

Note

*Grass is assumed to be Fair Condition and Average Slope
*All Impervious Cover is assumed to be Concrete (Conservative Approach)

DA	Area (ac.)	I.C. Area (Ac.)	I.C. (%)	C2	C10	C25	C100	C500	Tc (min)	I2 (in/hr)	I10 (in/hr)	I25 (in/hr)	I100 (in/hr)	I500 (in/hr)	Q2 (cfs)	Q10 (cfs)	Q25 (cfs)	Q100 (cfs)	Q500 (cfs)
C-1	1.01	0.61	60.0%	0.58	0.65	0.70	0.78	0.83	9.78	5.07	7.57	9.30	12.24	15.92	2.98	4.97	6.54	9.62	13.38
A-2	0.39	0.23	58.2%	0.57	0.64	0.69	0.77	0.82	5.00	6.27	9.43	11.62	15.32	20.02	1.40	2.36	3.12	4.60	6.44
A-3	0.10	0.10	100.0%	0.75	0.83	0.88	0.97	1.00	5.00	6.27	9.43	11.62	15.32	20.02	0.46	0.76	0.99	1.44	1.94
B-1	0.60	0.49	83.1%	0.68	0.75	0.80	0.89	0.93	5.13	6.23	9.37	11.54	15.21	19.87	2.52	4.20	5.51	8.05	10.99
B-2	0.06	0.03	44.6%	0.52	0.58	0.63	0.70	0.77	5.00	6.27	9.43	11.62	15.32	20.02	0.20	0.35	0.46	0.68	0.97
B-3	0.29	0.17	58.1%	0.57	0.64	0.69	0.77	0.82	13.06	4.50	6.72	8.26	10.87	14.14	0.74	1.24	1.63	2.41	3.36
D-1	0.85	0.20	24.1%	0.43	0.49	0.53	0.61	0.68	5.00	6.27	9.43	11.62	15.32	20.02	2.29	3.91	5.23	7.87	11.56
RG-A	0.73	0.73	100.0%	0.75	0.83	0.88	0.97	1.00	9.19	5.19	7.75	9.53	12.54	16.30	2.84	4.70	6.13	8.89	11.91
RG-B	0.64	0.64	100.0%	0.75	0.83	0.88	0.97	1.00	9.19	5.19	7.75	9.53	12.54	16.30	2.48	4.11	5.36	7.77	10.42
RG-C	0.68	0.68	100.0%	0.75	0.83	0.88	0.97	1.00	6.28	5.89	8.83	10.87	14.31	18.65	3.00	4.98	6.50	9.44	12.69
OFF-1	0.47	0.00	0.0%	0.33	0.38	0.42	0.49	0.58	12.32	4.62	6.89	8.47	11.15	14.50	0.72	1.23	1.67	2.57	3.95
OFF-2	0.18	0.00	0.0%	0.33	0.38	0.42	0.49	0.58	9.04	5.22	7.80	9.59	12.62	16.40	0.31	0.53	0.72	1.11	1.71

Tc (Post Development)

Note

*Minimum Time of Concentration is 5 min per Austin Design Manual.

DA	Area (ac.)	L (ft)	n	Slope (ft/ft)	P	Tsheet	Tsc	Tc
C-1	1.01	325	0.069	0.006	4.06	7.44	2.34	9.78
A-2	0.39	84	0.071	0.018	4.06	4.34	0.00	5.00
A-3	0.10	35	0.015	0.014	4.06	0.68	0.00	5.00
B-1	0.60	278	0.038	0.011	4.06	3.72	1.41	5.13
B-2	0.06	44	0.090	0.012	4.06	3.72	0.00	5.00
B-3	0.29	158	0.150	0.008	4.06	12.53	0.53	13.06
D-1	0.85	45	0.150	0.023	4.06	4.31	0.00	5.00
RG-A	0.73	279	0.150	0.023	4.06	8.23	0.97	9.19
RG-B	0.64	279	0.150	0.023	4.06	8.23	0.97	9.19
RG-C	0.68	95	0.150	0.041	4.06	6.28	0.00	6.28
OFF-1	0.47	140	0.150	0.009	4.06	11.97	0.35	12.32
OFF-2	0.18	251	0.150	0.023	4.06	8.23	0.82	9.04

Analysis Point 1 - Calculations Computed Through HEC-HMS 4.3			
Storm Event	Existing Flow (CFS)	Proposed Flow (CFS)	Change (CFS)
2-Yr	11.0	10.6	-0.4
10-Yr	19.9	19.1	-0.8
25-Yr	25.7	24.8	-0.9
100-Yr	34.0	33.2	-0.8

Analysis Point 2 - Calculations Computed Through HEC-HMS 4.3			
Storm Event	Existing Flow (CFS)	Proposed Flow (CFS)	Change (CFS)
2-Yr	2.5	2.3	-0.2
10-Yr	4.2	3.9	-0.3
25-Yr	5.6	5.2	-0.3
100-Yr	8.3	7.9	-0.4

LEGEND:

EXISTING	PROPOSED	
		EDGE OF CONCRETE PAVEMENT
		EDGE OF ASPHALT PAVEMENT
		DRAINAGE SWALE
		CHAIN LINK FENCE
		TOP OF BERM
		PROPOSED SHEET FLOW ARROWS
	D-2	DRAINAGE AREA NAME
	0.05 Ac.	ACREAGE
		DRAINAGE AREA BOUNDARY
		WETLAND CEF
		EASEMENT

0 10 20 40 80 120
SCALE: 1" = 40'

NOTES:

1. PROPOSED DRAINAGE DOES NOT NEGATIVELY IMPACT EXISTING DRAINAGE CAPACITY
2. SEE SITE DETAIL SHEET 49 FOR PAVEMENT DETAILS

CONTRACTOR TO VERIFY ELEVATION AND LOCATION OF ALL EXISTING UTILITIES PRIOR TO COMMENCEMENT OF ANY NEW CONSTRUCTION

TEXAS811 NOTIFICATION SYSTEM
CALL BEFORE YOU DIG!!!
www.texas811.org
Texas811 or 1-800-545-6005

NO.	DATE	REVISIONS	APP.

WILBARGER CREEK M.U.D. No. 2
TRAVIS COUNTY, TEXAS

WASTEWATER TREATMENT PLANT EXPANSION TO 1.5 MGD

PROPOSED DRAINAGE AREAS

QUIDDITY
Texas Board of Professional Engineers and Land Surveyors Reg. No. F-23290
912 South Capital of Texas Hwy, Suite 300 • Austin, TX 78746 • 512.441.9493

SCALE: 1" = 40'
DATE: SEPTEMBER 2026
JOB NO. 0A651-0021-02
SUBMITTED:
DGN. BY: HLC
DWN. BY: HLC
DWG. NO.
SURV. BY:
F.B. NO.

STATE OF TEXAS
RYAN W. LeMAIRE
143835
LICENSED PROFESSIONAL ENGINEER
09/24/2026

0-C-29
SHEET NO. 39 OF 230

C:\Users\hc\DC\ACCDocs\Quiddity - Water-\0A651-0021-02 _ WILBARGER WWTP EXP. 1.5 MGD\Project Files\PLANS\SITE\SITE 10-29.dwg, Sep 23, 2026 - 6:02pm, hc

SEWER 25 yr

25-yr Intensity = a/(t+b)^c	
a_{25} =	64.56
b_{25} =	7.382
c_{25} =	0.6814

"*" Indicates an inlet lateral connection with unique formula for junction loss.

	Sewer No.	Inlet / MH From	Inlet / MH To	Area (acres)	Total Area (acres)	Time Conc. (min)	Runoff "C"	C (Weighted)	Intensity "I" (in/hr)	Q_{25} (cfs)	**Trunk Line Design** Mannings "n"	Length (ft.)	Pipe Diam. or Box Rise (in.)	Box Span (in.)	Grade (ft./ft.)	Full Flow Velocity (fps)	Full Flow Capacity (cfs)	Actual Velocity (out)	Hydraulic Gradient (ft/ft)	K (Constant)	Junction/ MH Loss (feet)	Hydraulic Grade Elevation (ft)	Dwnstm Flowline (ft)	Vert Adj (ft)	Upstrm Flowline (ft)	Rise in Pipe (ft)	Pipe Crown (ft)	Top of MH/Inlet Elevation (ft)	Inlet Name	HGL Cover Future Ground Minus HGL (ft)	Pipe Cover Future Ground Minus Pipe Crown (ft)
Line C																															
C-1		Inlet A-0	RG-C	1.01	1.01	9.78	0.70	0.70	9.30	6.54	0.013	83.3	24		0.0240	11.15	35.04	2.08	0.0008	0.25	0.0168	503.00	499.00	0.00	501.00	2.00	503.00	505.20	-	2.20	2.20
		RG-C																							499.00						
Line A																															
A-2		Inlet A-2	RG-A	0.39	0.39	5.00	0.69	0.69	11.62	3.12	0.013	100.0	18		0.0050	4.20	7.43	1.76	0.0009	0.25	0.0121	502.00	500.00	0.00	500.50	0.50	502.00	504.37	-	2.37	2.37
RG-A		RG-A																				501.50			500.00		501.50				
Line B																															
B-1		Inlet B-1	Box B-2	0.60	0.60	5.13	0.80	0.80	11.54	5.51	0.013	46.0	18		0.0050	4.20	7.43	3.12	0.0027	0.25	0.0378	502.55	500.82	0.10	501.05	0.23	502.55	504.25	-	1.70	1.70
B-2		Inlet B-3	Box B-2	0.06	0.06	5.00	0.63	0.63	11.62	0.46	0.013	58.0	12		0.0050	3.21	2.52	0.58	0.0002	0.25	0.0013	502.23	500.82	0.10	501.11	0.29	502.11	504.54	-	2.31	2.43
RG-B		Box B-2	RG-B	0.00	0.66	5.31		0.79	11.43	5.91	0.013	44.0	18		0.0164	7.61	13.45	3.34	0.0031	0.25	0.0434	502.22	500.00	0.00	500.72	0.72	502.22	504.78	-	2.56	2.56
		RG-B																				501.50			500.00						

SEWER 100 yr

100-yr Intensity = a/(t+b)^c	
a_{100} =	76.9
b_{100} =	6.726
c_{100} =	0.6554

"*" Indicates an inlet lateral connection with unique formula for junction loss.

	Sewer No.	Inlet / MH From	Inlet / MH To	Area (acres)	Total Area (acres)	Time Conc. (min)	Runoff "C"	C (Weighted)	Intensity "I" (in/hr)	Q_{100} (cfs)	**Trunk Line Design** Mannings "n"	Length (ft.)	Pipe Diam. or Box Rise (in.)	Box Span (in.)	Grade (ft./ft.)	Full Flow Velocity (fps)	Full Flow Capacity (cfs)	Actual Velocity (out)	Hydraulic Gradient (ft/ft)	K (Constant)	Junction/ MH Loss (feet)	Hydraulic Grade Elevation (ft)	Dwnstm Flowline (ft)	Vert Adj (ft)	Upstrm Flowline (ft)	Rise in Pipe (ft)	Pipe Crown (ft)	Top of MH/Inlet Elevation (ft)	Inlet Name	HGL Cover Future Ground Minus HGL (ft)	Pipe Cover Future Ground Minus Pipe Crown (ft)
Line C																															
C-1		Inlet A-0	RG-C	1.01	1.01	9.78	0.78	0.78	12.24	9.62	0.013	83.3	24		0.0240	11.15	35.04	3.06	0.0018	0.25	0.0364	503.00	499.00	0.00	501.00	2.00	503.00	505.20	-	2.20	2.20
		RG-C																													
Line A																															
A-2		Inlet A-2	RG-A	0.39	0.39	5.00	0.77	0.77	15.32	4.60	0.013	100.0	18		0.0050	4.20	7.43	2.60	0.0019	0.25	0.0263	502.00	500.00	0.00	500.50	0.50	502.00	504.37	-	2.37	2.37
RG-A		RG-A																				501.50			500.00		501.50				
Line B																															
B-1		Inlet B-1	Box B-2	0.60	0.60	5.13	0.89	0.89	15.21	8.05	0.013	46.0	18		0.0050	4.20	7.43	4.55	0.0058	0.25	0.0805	502.59	500.82	0.10	501.05	0.23	502.55	504.25	-	1.66	1.70
B-2		Inlet B-3	Box B-2	0.06	0.06	5.00	0.70	0.70	15.32	0.68	0.013	58.0	12		0.0050	3.21	2.52	0.87	0.0004	0.25	0.0029	502.25	500.82	0.10	501.11	0.29	502.11	504.54	-	2.29	2.43
RG-B		Box B-2	RG-B	0.00	0.66	5.31		0.87	15.06	8.64	0.013	44.0	18		0.0164	7.61	13.45	4.89	0.0067	0.25	0.0927	502.22	500.00	0.00	500.72	0.72	502.22	504.78	-	2.56	2.56
		RG-B																				501.50			500.00						

NO.	DATE	REVISIONS	APP.

WILBARGER CREEK M.U.D. No. 2
TRAVIS COUNTY, TEXAS

WASTEWATER TREATMENT PLANT EXPANSION TO 1.5 MGD

PROPOSED SITE STORM CALCULATIONS

QUIDDITY
Texas Board of Professional Engineers and Land Surveyors Reg. No. F-23290
912 South Capital of Texas Hwy, Suite 300 • Austin, TX 78746 • 512.441.9493

SCALE: N.T.S
DATE: MAY 2026
JOB NO. 0A651-0021-02
SUBMITTED:
DGN. BY:
DWN. BY:
DWG. NO.
SURV. BY:
F.B. NO.

STATE OF TEXAS
RYAN W. LeMARRE
143835
LICENSED PROFESSIONAL ENGINEER
5/29/2026

0-C-30
SHEET NO. 40 OF 230

0 1 2 3 4 5 ORIGINAL SCALE IN INCHES FOR REDUCED PLANS

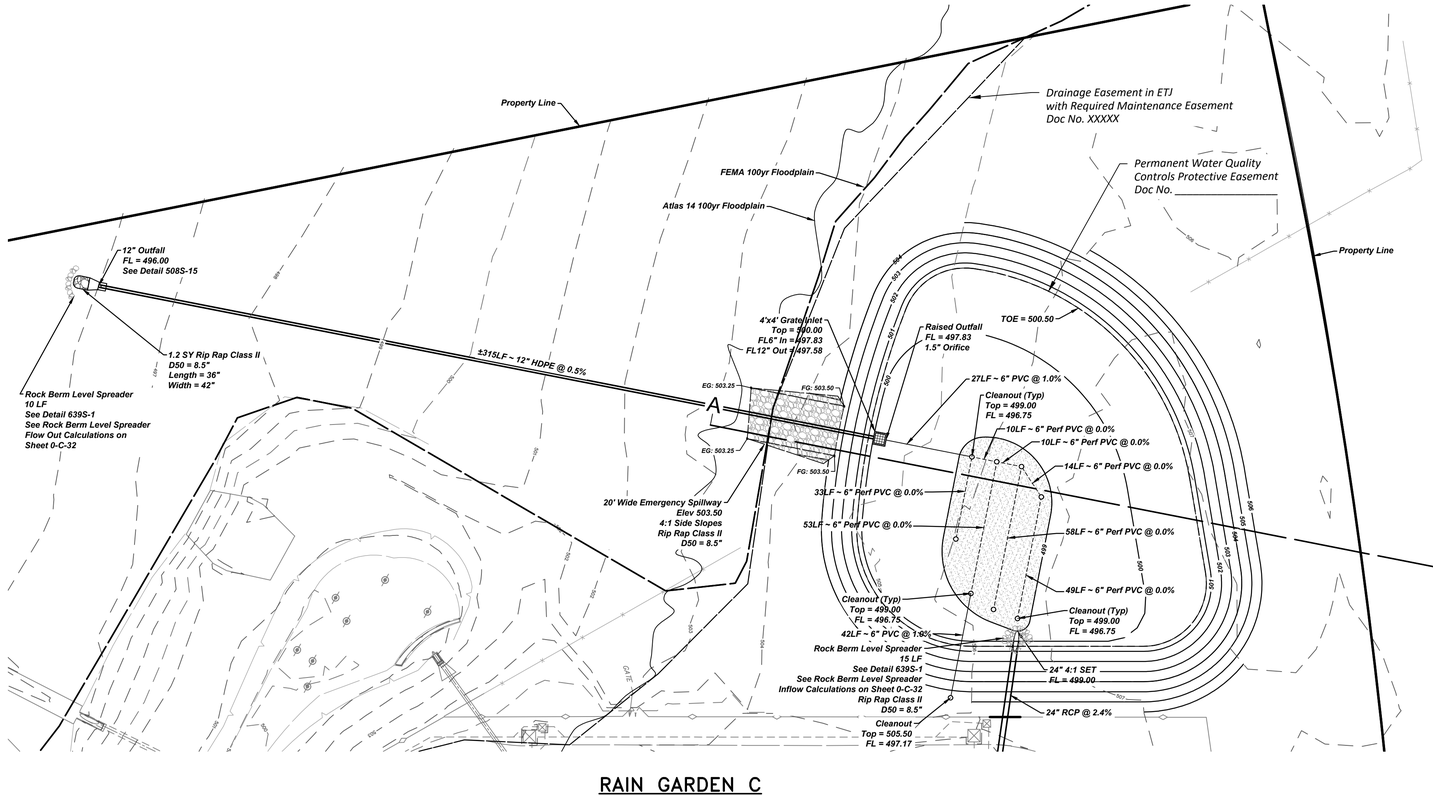

RAIN GARDEN C

Section A-A

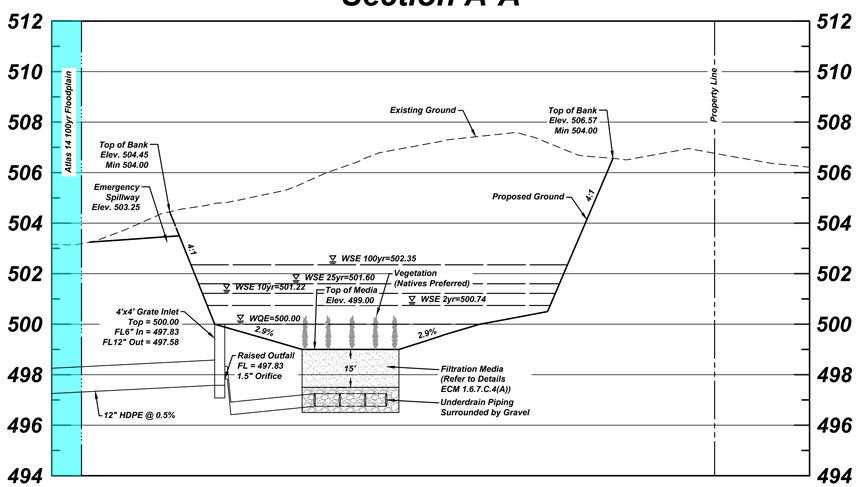

Note: Biofiltration medium shall comply with ECM 1.6.7.C.4(A)

Figure 1.6.7.C-3 Biofiltation Medium Bed W/ Underdrain System:

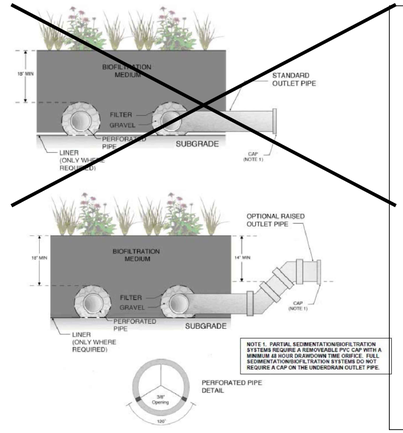

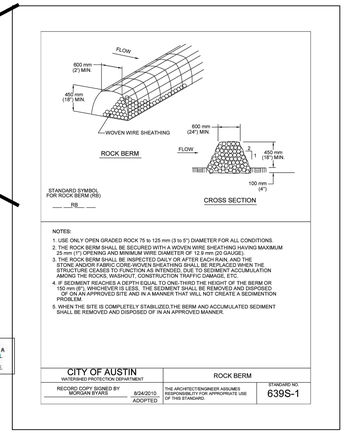

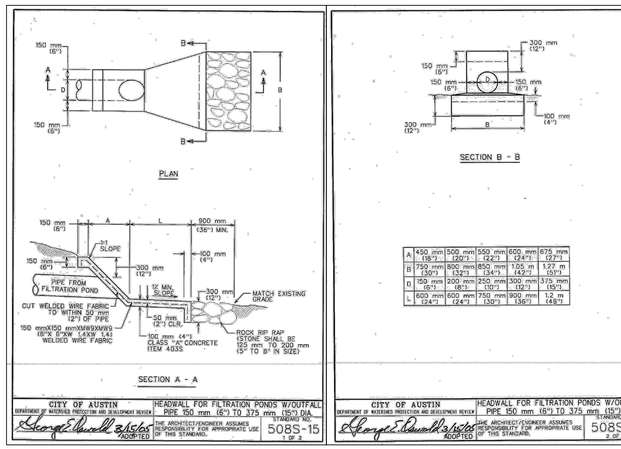

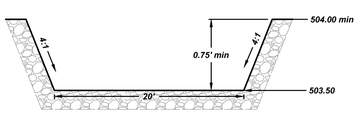

EMERGENCY SPILLWAY
NTS

*Contact **postinspection@traviscountytx.gov** to schedule the following milestone inspection(s) for the water quality structures with at least a 48-hour notice, if applicable:*

- *INSPECTION OF THE INSTALLED UNDERDRAIN PIPING SYSTEM AND INSPECTION OF FILTRATION MEDIA AND ROCK PRIOR TO INSTALLING OVER THE PIPING SYSTEM - **IF COVERED, REMOVAL OF MATERIAL WILL BE REQUIRED.***
- *INSPECTION OF PLANTS PRIOR TO INSTALLING.*
- *THE BIO-FILTRATRION MEDIA MUST BE CERTIFIED BY THE PROJECT ENGINEER OR THEIR DESIGNEE (E.G., CONTRACTOR, SOIL SUPPLIER OR APPROPRIATE QUALIFIED ALTERNATIVE INDIVIDUAL) AS MEETING THE ABOVE PERFORMANCE CRITERIA (BASED ON SUBMITTAL OF DELIVERY TICKETS, TEST RESULTS, ETC.) BEFORE ACCEPTANCE. THE MEDIA MUST NOT BE COMPACTED BY CONSTRUCTION EQUIPMENT.*
- *COMPLETION OF CONSTRUCTION OF WATER QUALITY STRUCTURE(S).*

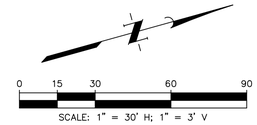

NO.	DATE	REVISIONS	APP.

WILBARGER CREEK M.U.D. No. 2
TRAVIS COUNTY, TEXAS

WASTEWATER TREATMENT PLANT
EXPANSION TO 1.5 MGD

RAINGARDEN PLAN
& SECTION

QUIDDITY
Texas Board of Professional Engineers and Land Surveyors Reg. No. F-23290
912 South Capital of Texas Hwy, Suite 300 • Austin, TX 78746 • 512.441.9493

SCALE:	1"=30' H; 1"=3' V	DGN. BY:	SLH
DATE:	MAY 2026	DWN. BY:	SLH
JOB NO.	0A651-0021-02	DWG. NO.	
SUBMITTED:		SURV. BY:	
		F.B. NO.	

STATE OF TEXAS
RYAN W. LeMARR
143835
LICENSED PROFESSIONAL ENGINEER
5/29/2026

0-C-31
SHEET NO. 41 OF 230

C:\Users\hc\DC\ACCDocs\Quiddity - Water-\0A651-0021-02 _ WILBARGER WWTP EXP. 1.5 MGD\Project Files\PLANS\RAINGARDEN.dwg, May 29, 2026 - 10:06am, hc

0 1 2 3 4 5 ORIGINAL SCALE IN INCHES FOR REDUCED PLANS

APPENDIX R-11
RAIN GARDEN CALCULATIONS
WILBARGER WWTP
RAIN GARDEN - C

DRAINAGE AREA DATA:

DRAINAGE AREA TO CONTROL (MAX. 2.0 AC.)	1.01	ACRES
DRAINAGE AREA IMPERVIOUS COVER (IC)	60%	PERCENT
CAPTURE DEPTH (CD) = (0.5" + (IC - 20)/100))	0.900	INCHES

WATER QUALITY CONTROL CALCULATIONS:	REQUIRED		PROVIDED	
WATER QUALITY VOLUME (WQV)=(CD * AREA * 3630)=	3,300	CF	3,450	CF
100 YEAR PEAK FLOW RATE (Q_{100})	11.61	CFS		
FILTRATION POND AREA (Af) [EQ. H-3]	2,537	SF	2,537	SF
DEPTH OF PONDING (D)	MAX. 1.0	FT	1.00	FT
DEPTH OF FILTRATION MEDIA (L)	MIN. 1.5	FT	1.5	FT
EFFECTIVE POROSITY WQV (WQVne = 0.24 * Af * L)			913	CF
PONDED WQV (WQVponded = Af*D)			2,537	CF
		TOTAL WQV =	3,450	CF
WATER QUALITY ELEVATION (WQE)			500.00	FT
ELEVATION OF OVERFLOW WEIR			500.00	FT
POND TOP OF WALL			504.00	FT
LENGTH OF OVERFLOW WEIR			16.00	FT
REQUIRED HEAD TO PASS Q100	MAX. 0.5	FT	0.36	FT
POND FREEBOARD PROVIDED TO PASS Q100	MIN. 0.25	FT	3.64	FT
LENGTH OF EMERGENCY OVERFLOW WEIR			20.00	FT

FOR PARTIAL INFILTRATION RAIN GARDENS:

RAIN GARDEN POND DRAWDOWN TIME	48	HRS
UNDERDRAIN ORIFICE SIZE (DIAMETER)	0.77	IN
UNDERDRAIN ORIFICE SIZE (AREA)	0.46	SQ IN

ORIFICE SIZING FOR UNDERDRAIN SYSTEM

MNIMUM DRAWNDOWN TIME= 48HRS = 172,800 SEC		
TOTAL WQV	3450	CF
CENTERLINE ELEVATION=	497.83	FT
HEAD (H)= AVG WQE - ORIFICE CENTERLINE ELEVATION=	1.67	FT
MAX FLOW ALLOWED (Q)	0.020	CFS
UNDERDRAIN ORIFICE AREA= $Q/(C*(2*g*H)^{0.5})$=	0.003	SF
$D = (4*A/pi)^{0.5}$ =	0.064	FT
UNDERDRAIN ORIFICE A-1 DIAMETER=	0.77	IN
THEREFORE, RAIN GARDEN WILL DRAWDOWN IN 48 HOURS		

Rock Berm Level Spreader - Flow Into Rain Garden C

100-year Design Storm Flow Rate =	11.61	cfs
WEIR EQUATION Q = 3.0 * L* (h)^1.5	L = 15.0	
h = (Q/3L)^0.6667 =	0.41	FT
Area=	6.1	sf
Velocity =	**1.91**	**fps**

Rock Berm Level Spreader - Flow Out of 12" Outfall

100-year Design Storm Flow Rate =	3.30	cfs
WEIR EQUATION Q = 3.0 * L* (h)^1.5	L = 10.0	
h = (Q/3L)^0.6667 =	0.23	FT
Area=	2.3	sf
Velocity =	**1.44**	**fps**

Filtration Basin - Rain Garden C

2537 sq ft x 0.20 = 508 plants required

Plant	Size	Spacing	Quantity	1 Gallon Equivalent
Shrub	5 gal	5' o.c.	41	164
Bunchgrass	5 gal	2' o.c.	50	200
Bunchgrass	1 gal	2.5' o.c.	60	60
Perennial	1 gal	3' o.c.	60	60
Groundcover	4"	2' o.c.	100	25
		Total		**509**

Detention Pond

ELEV.	AREA [SF]	VOL. [CF]	TOT. VOL. [CF]	ACFT
500	10,983	0.0	0	0
500.5	16,415	6849.6	6,850	0.16
501	17,373	8447.0	15,297	0.35
502	19,363	18367.6	33,664	0.77
503	19,363	19362.5	53,027	1.22
504	23,644	21503.2	74,530	1.71

*Contact **postinspection@traviscountytx.gov** to schedule the following milestone inspection(s) for the water quality structures with at least a 48-hour notice, if applicable:*

- *INSPECTION OF THE INSTALLED UNDERDRAIN PIPING SYSTEM AND INSPECTION OF FILTRATION MEDIA AND ROCK PRIOR TO INSTALLING OVER THE PIPING SYSTEM - **IF COVERED, REMOVAL OF MATERIAL WILL BE REQUIRED.***
- *INSPECTION OF PLANTS PRIOR TO INSTALLING.*
- *THE BIO-FILTRATION MEDIA MUST BE CERTIFIED BY THE PROJECT ENGINEER OR THEIR DESIGNEE (E.G., CONTRACTOR, SOIL SUPPLIER OR APPROPRIATE QUALIFIED ALTERNATIVE INDIVDUAL) AS MEETING THE ABOVE PERFORMANCE CRITERIA (BASED ON SUBMITTAL OF DELIVERY TICKETS, TEST RESULTS, ETC.) BEFORE ACCEPTANCE. THE MEDIA MUST NOT BE COMPACTED BY CONSTRUCTION EQUIPMENT.*
- *COMPLETION OF CONSTRUCTION OF WATER QUALITY STRUCTURE(S).*

APPENDIX R-11
RAIN GARDEN CALCULATIONS
WILBARGER WWTP
RAIN GARDEN - A

DRAINAGE AREA DATA:

DRAINAGE AREA TO CONTROL (MAX. 2.0 AC.)	0.49	ACRES
DRAINAGE AREA IMPERVIOUS COVER (IC)	67.3%	PERCENT
CAPTURE DEPTH (CD) = (0.5" + (IC - 20)/100))	0.973	INCHES

WATER QUALITY CONTROL CALCULATIONS:	REQUIRED		PROVIDED	
WATER QUALITY VOLUME (WQV)=(CD * AREA * 3630)=	1,732	CF	6,059	CF
100 YEAR PEAK FLOW RATE (Q_{100})	6.04	CFS		
FILTRATION POND AREA (Af) [EQ. H-3]	1,273	SF	4,455	SF
DEPTH OF PONDING (D)	MAX. 1.0	FT	1.00	FT
DEPTH OF FILTRATION MEDIA (L)	MIN. 1.5	FT	1.5	FT
EFFECTIVE POROSITY WQV (WQVne = 0.24 * Af * L)			1,604	CF
PONDED WQV (WQVponded = Af*D)			4,455	CF
		TOTAL WQV =	6,059	CF
WATER QUALITY ELEVATION (WQE)			501.00	FT
ELEVATION OF OVERFLOW WEIR			501.00	FT
LENGTH OF OVERFLOW WEIR			32.00	FT
REQUIRED HEAD TO PASS Q100	MAX. 0.5	FT	0.15	FT
POND FREEBOARD PROVIDED TO PASS Q100	MIN. 0.25	FT	0.85	FT
LENGTH OF EMERGENCY OVERFLOW WEIR			20.00	FT

FOR FULL FILTRATION RAIN GARDENS:

RAIN GARDEN POND DRAWDOWN TIME		48	HRS			
UNDERDRAIN ORIFICE SIZE (DIAMETER)	A-1	0.73	IN	A-1	0.41	IN
UNDERDRAIN ORIFICE SIZE (AREA)	A-2	0.42	SQ IN	A-2	0.13	SQ IN

APPENDIX R-11
RAIN GARDEN CALCULATIONS
WILBARGER WWTP
RAIN GARDEN - B

DRAINAGE AREA DATA:

DRAINAGE AREA TO CONTROL (MAX. 2.0 AC.)	0.95	ACRES
DRAINAGE AREA IMPERVIOUS COVER (IC)	72.6%	PERCENT
CAPTURE DEPTH (CD) = (0.5" + (IC - 20)/100))	1.026	INCHES

WATER QUALITY CONTROL CALCULATIONS:	REQUIRED		PROVIDED	
WATER QUALITY VOLUME (WQV)=(CD * AREA * 3630)=	3,539	CF	4,689	CF
100 YEAR PEAK FLOW RATE (Q_{100})	11.14	CFS		
FILTRATION POND AREA (Af) [EQ. H-3]	2,602	SF	3,448	SF
DEPTH OF PONDING (D)	MAX. 1.0	FT	1.00	FT
DEPTH OF FILTRATION MEDIA (L)	MIN. 1.5	FT	1.5	FT
EFFECTIVE POROSITY WQV (WQVne = 0.24 * Af * L)			1,241	CF
PONDED WQV (WQVponded = Af*D)			3,448	CF
		TOTAL WQV =	4,689	CF
WATER QUALITY ELEVATION (WQE)			501.00	FT
ELEVATION OF OVERFLOW WEIR			501.00	FT
LENGTH OF OVERFLOW WEIR			32.00	FT
REQUIRED HEAD TO PASS Q100	MAX. 0.5	FT	0.22	FT
POND FREEBOARD PROVIDED TO PASS Q100	MIN. 0.25	FT	0.78	FT
LENGTH OF EMERGENCY OVERFLOW WEIR			20.00	FT

FOR FULL FILTRATION RAIN GARDENS:

RAIN GARDEN POND DRAWDOWN TIME		48	HRS			
UNDERDRAIN ORIFICE SIZE (DIAMETER)	B-1	0.41	IN	B-2	0.37 IN	B-3 0.53 IN
UNDERDRAIN ORIFICE SIZE (AREA)	B-1	0.13	SQ IN	B-2	0.11 SQ IN	B-3 0.22 SQ IN

Preliminary Plan and Final Plat:	Commercial Development	Notes
1. Access Requirements for the following items:		
From ROW		
12 ft. perimeter		
To inlets and outlets		
Ramps into basins	X*	Side Slopes of Pond are 4:1
2. Staging area		
3. Drainage Easements	X*	A permanent water quality controls easement is recorded around the rain garden
4. Setbacks	N/A	This pond is not adjacent to a residential property
Subdivision Construction and Site Plan:		
5. Fencing	N/A	This pond does not meet the criteria needed for required fencing
6. Gates	X	There is an existing gate at the entrance of the site over 12' in width
7. Outfalls	X	Erosion Control Measures are provided
8. Slopes	X	The side slopes are 4:1 and do not exceed the maximum 3:1. This is an earthen pond with a bottom slope of 2.9%
9. Pilot Channels	N/A	Pilot channels are not permitted in water quality SCMs due to short-circuiting and standing water problems
10. Signage	N/A	No signs are proposed. Not a residential or city-maintained SCM.
11. Mechanical SCMs		
12. Landscaping	X	Landscaping does not encroach any access facilities and grass does not exceed 12" within Detention pond portion.

Notes:

1. ***The following maintenance activities shall be performed on all SCMs, in addition to the requirements listed for the individual SCM types, to ensure proper function:***
   - ***a. Accumulated paper, trash and debris shall be removed every six (6) months or as necessary to maintain proper operation.***
   - ***b. Structural integrity shall be maintained at all times. Basins and all appurtenances shall be inspected annually, or more frequently if specified, and repairs shall be made if necessary. When maintenance or repairs are performed, the SCM shall be restored to the original lines and grades.***
   - ***c. Corrective maintenance shall occur:***
     - ***i. Any time drawdown of the Water Quality Volume does not occur within ninety-six (96) hours (i.e., no standing water is allowed), unless a greater maximum drawdown time is specified in the plans.***
     - ***ii.For detention ponds only, any time drawdown does not occur within twenty-four (24) hours.***
   - ***d. The inlet and outlet of SCMs shall be maintained unimpeded in order to convey flow at all times. Observed blockages to the inlet and outlet, due to vegetation, sediment, debris, or any other cause, shall be removed.***
   - ***e. No unvegetated area shall exceed ten (10) square feet. This performance requirement applies to the entire pond including the pond bottom, side slopes, and areas adjacent to the pond, and is intended to limit erosion.***
   - ***f. Integrated pest management shall be performed and shall adhere to Section 1.6.2.F, Integrated Pest Management Guidelines.***
   - ***g. The minimum vegetation height shall be four (4) inches in the SCM and all appurtenances, including the toe of the berm or wall outside the SCM, where applicable.***
   - ***h. Sediment build-up shall be removed:***
     - ***i.When the accumulation exceeds six (6) inches in splitter boxes, wet wells and basins.***
     - ***ii.When sediment traps are full.***
     - ***iii.When sediment, of any amount, causes standing water conditions or reduces basin storage by more than 10%.***
   - ***i. When sediment is removed, the following requirements apply:***
     - ***i.Irrigation shall be provided, as needed, until vegetation is established (well rooted). See Section 1.6.3.D, Irrigation Guidelines.***
     - ***ii.The design depth of the filtration media shall be verified. See Section 1.6.3.B.5.***
     - ***iii.Tilling of the filtration medium is not allowed.***
   - ***j. For subsurface ponds maintenance plan requirements, refer to ECM Section 1.6.2(E).***
2. ***Sedimentation and Filtration SCMs (Section 1.6.5).***
   - ***a.Vegetation within the SCM shall not exceed eighteen (18) inches in height at any time, except as called for in the design.***
   - ***b.Vegetation that is mowed or cut shall be removed from the SCM.***
3. ***Detention Basins.***
   - ***a.Vegetation within the basin shall not exceed eighteen (18) inches in height at any time.***

Biofiltration and Rain Gardens (Sections 1.6.7.C and 1.6.7.H).

A. Maintenance Considerations in Design.
A lack of maintenance considerations in the design of a landscape commonly results in a site that is more maintenance intensive (i.e., costly) than necessary and/or appropriate for its purpose, and one that requires the routine use of practices that are undesirable (e.g., extensive pesticide use, intensive pruning of plants that grow too large for the spaces they occupy). The designer shall include maintenance considerations and IPM throughout the planning and design phase of a biofiltration project. Landscapes should be designed to allow for the access and aid the maneuverability of maintenance equipment (e.g., if areas of the pond are designed to be mown, acute angles should be avoided in turf areas; wide angles, gentle, sweeping curves, and straight lines are easier to mow).

B. Routine Maintenance.
Once vegetation is established, biofiltration systems should require less maintenance than sand filtration systems because the vegetation protects the filtration media from surface crusting and sediment clogging. Plant roots also provide a pathway for water to permeate down into the media, thus further enhancing the hydraulic performance of the system. Unless damaged by unusual sediment loads, high flows, or vandalism, the biofiltration media should be left undisturbed and allowed to age naturally, and biofiltration pond vegetation shall be managed so that a dense, healthy vegetative cover is preserved. The following maintenance items should be performed depending on frequency and time of year:

Biweekly during first growing season: Inspect vegetation until 95% vegetative cover is established.

Monthly: Check for accumulated sediments, remove as needed.

Quarterly: Remove debris and accumulated sediment; replace soil media in void areas caused by settlement; repair eroded areas; remulch by hand any void areas.

Semi-annually: Remove and replace dead or diseased vegetation that is considered beyond treatment (see planting specifications); treat all diseased trees and shrubs mechanically or by hand depending on the insect or disease infestation. If drawdown exceeds the drawdown time according to Section 1.6.3.C.1, lightly scarify soil with hand cultivator; if standing water remains for greater than 96 hours, remove top layer of sediment, mulch, and potentially vegetation; de-compact soil by scarification, and replace mulch and disturbed vegetation.

Late winter: Trim bunch grasses; mow turf grasses; harvest other types of vegetation according to recommendations in the planting specifications. Adhere to Section 1.6.2.F.

Spring: Remove previous mulch layer and apply new mulch layer by hand (option) once every two to three years.

NO.	DATE	REVISIONS	APP.

WILBARGER CREEK M.U.D. No. 2
TRAVIS COUNTY, TEXAS

WASTEWATER TREATMENT PLANT EXPANSION TO 1.5 MGD

RAINGARDEN NOTES & CALCULATIONS

QUIDDITY
Texas Board of Professional Engineers and Land Surveyors Reg. No. F-23290
912 South Capital of Texas Hwy, Suite 300 • Austin, TX 78746 • 512.441.9493

SCALE: AS SHOWN DGN. BY: SLH
DATE: MAY 2026 DWN. BY: SLH
JOB NO. 0A651-0021-02 DWG. NO.
SUBMITTED: SURV. BY:
F.B. NO.

STATE OF TEXAS
RYAN W. LaMARRE
143835
LICENSED PROFESSIONAL ENGINEER
5/29/2026

0-C-32
SHEET NO. 42 OF 230

C:\Users\hc\DC\ACCDocs\Quiddity – Water–\0A651-0021-02 _ WILBARGER WWTP EXP. 1.5 MGD\Project Files\PLANS\RAINGARDEN.dwg, May 29, 2026 – 10:10am, hc

ORIGINAL SCALE IN INCHES FOR REDUCED PLANS

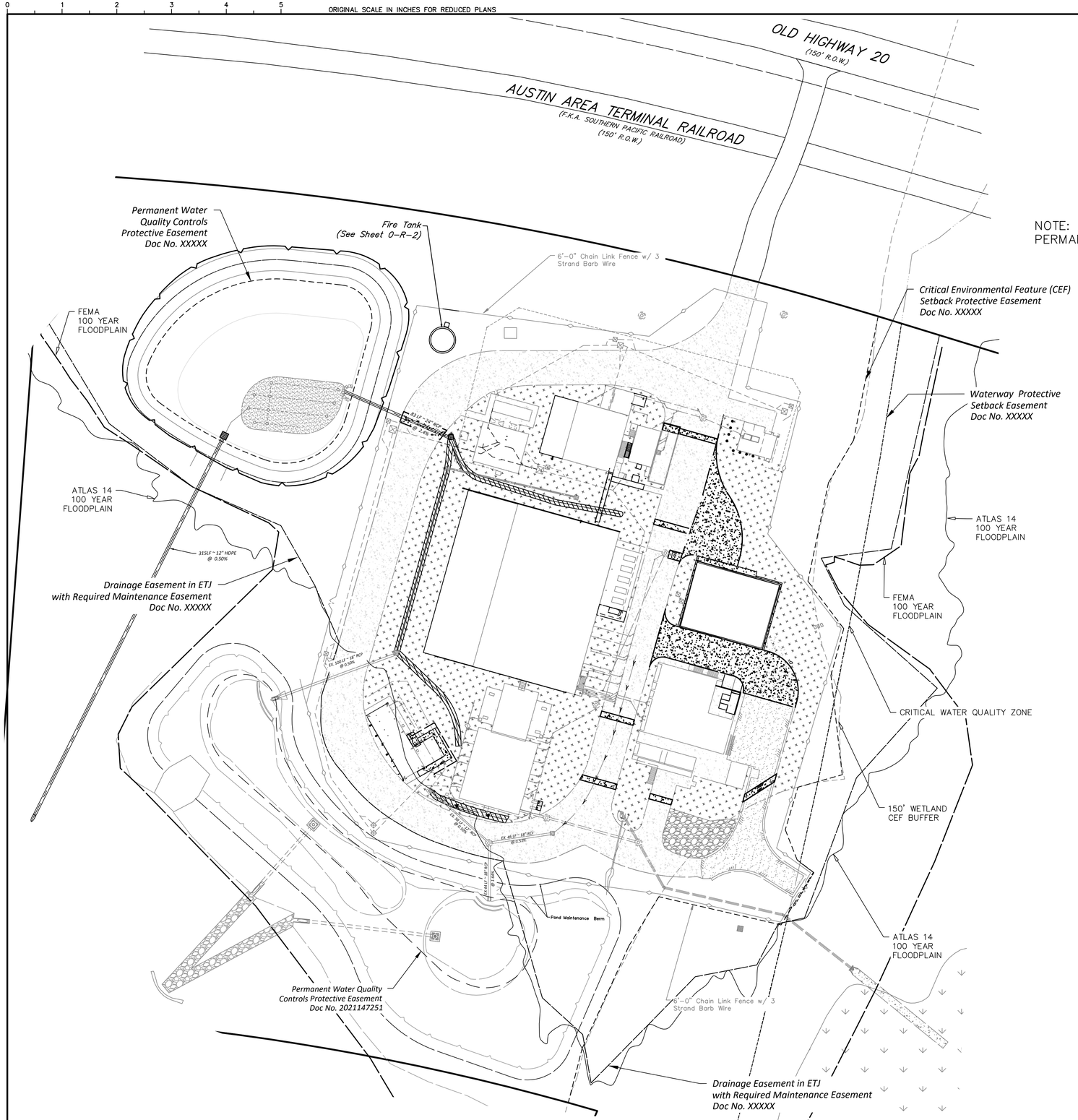

LEGEND:

- HYDROMULCH (Refer to COA SSM 604S.7 & Notes on Sheet 0-C-34)
- CURLEX II (Refer to Notes on Sheet 0-C-34)
- WETLAND CEF

NOTE: SEE SHEET 0-C-34 FOR TEMPORARY AND PERMANENT VEGETATIVE STABILIZATION DETAILS

0 10 20 40 80 120
SCALE: 1" = 40'

NO.	DATE	REVISIONS	APP.

WILBARGER CREEK M.U.D. No. 2
TRAVIS COUNTY, TEXAS

WASTEWATER TREATMENT PLANT
EXPANSION TO 1.5 MGD

OVERALL SITE RESTORATION PLAN

QUIDDITY
Texas Board of Professional Engineers and Land Surveyors Reg. No. F-23290
912 South Capital of Texas Hwy, Suite 300 • Austin, TX 78746 • 512.441.9493

SCALE:	1" = 40'	DGN. BY:	HLC
DATE:	SEPTEMBER 2026	DWN. BY:	HLC
JOB NO.	0A651-0021-02	DWG. NO.	
SUBMITTED:		SURV. BY:	
		F.B. NO.	

STATE OF TEXAS
RYAN W. LeMARRE
143835
LICENSED PROFESSIONAL ENGINEER
09/24/2026

0-C-33
SHEET NO. 43 OF 230

C:\Users\hc\DC\ACCDocs\Quiddity - Water-\0A651-0021-02 _ WILBARGER WWTP EXP. 1.5 MGD\Project Files\PLANS\SITE\SITE 10-29.dwg, Sep 23, 2026 - 6:03pm, hc

0 1 2 3 4 5 ORIGINAL SCALE IN INCHES FOR REDUCED PLANS

TEMPORARY VEGETATIVE STABILIZATION NOTES:

The contractor shall install erosion/sedimentation controls, tree/natural area protective fencing, and conduct "Pre-Construction" tree fertilization (if applicable) prior to any site preparation work (clearing, grubbing or excavation).

2. The placement of erosion/sedimentation controls shall be in accordance with the Environmental Criteria Manual and the approved Erosion and Sedimentation Control Plan. The COA ESC Plan shall be consulted and used as the basis for a TPDES required SWPPP. If a SWPPP is required, it shall be available for review by the City of Austin Environmental Inspector at all times during construction, including at the Pre-Construction meeting. The checklist below contains the basic elements that shall be reviewed for permit approval by COA EV Plan Reviewers as well as COA EV Inspectors.

— Plan sheets submitted to the City of Austin MUST show the following:
Direction of flow during grading operations.
Location, description, and calculations for off-site flow diversion structures.
Areas that will not be disturbed; natural features to be preserved.
Delineation of contributing drainage area to each proposed BMP (e.g., silt fence, sediment basin, etc.).
Location and type of E&S BMPs for each phase of disturbance.
Calculations for BMPs as required.
Location and description of temporary stabilization measures.
Location of on-site spoils, description of handling and disposal of borrow materials, and description of on-site permanent spoils disposal areas, including size, depth of fill and revegetation procedures.
Describe sequence of construction as it pertains to ESC including the following elements:

1. Installation sequence of controls (e.g. perimeter controls, then sediment basins, then temporary stabilization, then permanent, etc.)
2. Project phasing if required (LOC greater than 25 acres)
3. Sequence of grading operations and notation of temporary stabilization measures to be used
4. Schedule for converting temporary basins to permanent WQ controls
5. Schedule for removal of temporary controls
6. Anticipated maintenance schedule for temporary controls

— Categorize each BMP under one of the following areas of BMP activity as described below:
3.1 Minimize disturbed area and protect natural features and soil
3.2 Control Stormwater flowing onto and through the project
3.3 Stabilize Soils
3.4 Protect Slopes
3.5 Protect Storm Drain Inlets
3.6 Establish Perimeter Controls and Sediment Barriers
3.7 Retain Sediment On-Site and Control Dewatering Practices
3.8 Establish Stabilized Construction Exits
3.9 Any Additional BMPs
— Note the location of each BMP on your site map(s).
— For any structural BMPs, you should provide design specifications and details and refer to them.
— For more information, see City of Austin Environmental Criteria Manual 1.4.

3. The Placement of tree/natural area protective fencing shall be in accordance with the City of Austin standard Notes for Tree and Natural Area Protection and the approved Grading/Tree and Natural Area Plan.

4. A pre-construction conference shall be held on-site with the contractor, design Engineer/permit applicant and Environmental Inspector after installation of the erosion/sedimentation controls, tree/natural area protection measures and "Pre-Construction" tree fertilization (if applicable) prior to beginning any site preparation work. The owner or owner's representative shall notify the Development Services Department, 512-974-2278 or by email at environmental.inspections@austintexas.gov, at least three days prior to the meeting date. COA approved ESC Plan and TPDES SWPPP (if required) should be reviewed by COA EV Inspector at this time.

5. Any major variation in materials or locations of controls or fences from those shown on the approved plans will require a revision and must be approved by the reviewing Engineer, Environmental Specialist or City Arborist as appropriate. Major revisions must be approved by authorized COA staff. Minor changes to be made as field revisions to the Erosion and Sedimentation Control Plan may be required by the Environmental Inspector during the course of construction to correct control inadequacies.

6. The contractor is required to provide a certified inspector that is either a licensed engineer (or person directly supervised by the licensed engineer) or Certified Professional in Erosion and Sediment Control (CPESC or CPESC – IT), Certified Erosion, Sediment and Stormwater – Inspector (CESSWI or CESSWI – IT) or Certified Inspector of Sedimentation and Erosion Controls (CISEC or CISEC – IT) certification to inspect the controls and fences at weekly or bi-weekly intervals and after one-half (½) inch or greater rainfall events to insure that they are functioning properly. The person(s) responsible for maintenance of controls and fences shall immediately make any necessary repairs to damaged areas. Silt accumulation at controls must be removed when the depth reaches six (6) inches or one-third (⅓) of the installed height of the control whichever is less.

7. Prior to final acceptance by the City, haul roads and waterway crossings constructed for temporary contractor access must be removed, accumulated sediment removed from the waterway and the area restored to the original grade and revegetated. All land clearing debris shall be disposed of in approved spoil disposal sites.

8. All work must stop if a void in the rock substrate is discovered which is; one square foot in total area; blows air from within the substrate and/or consistently receives water during any rain event. At this time it is the responsibility of the Project Manager to immediately contact a City of Austin Environmental Inspector for further investigation. In addition, if the project site is located within the Edwards Aquifer, the Project Manager must notify the Travis County Balcones Canyonlands Conservation Preserve (BCCP) by email at bccp@traviscountytx.gov. Construction activities within 50 feet of the void must stop.

9. Temporary and Permanent Erosion Control: All disturbed areas shall be restored as noted below:

A. All disturbed areas to be revegetated are required to place a minimum of six (6) inches of topsoil [see Standard Specification Item No. 601S.3(A)]. Do not add topsoil within the critical root zone of existing trees.

· Topsoil salvaged from the existing site is encouraged for use, but it should meet the standards set forth in 601S.

An owner/engineer may propose use of onsite salvaged topsoil which does not meet the criteria of Standard Specification 601S by providing a soil analysis and a written statement from a qualified professional in soils, landscape architecture, or agronomy indicating the onsite topsoil will provide an equivalent growth media and specifying what, if any, soil amendments are required.

· Soil amendments shall be worked into the existing onsite topsoil with a disc or tiller to create a well-blended material.

The vegetative stabilization of areas disturbed by construction shall be as follows:
TEMPORARY VEGETATIVE STABILIZATION:

1. From September 15 to March 1, seeding shall be with or include a cool season cover crop: (Western Wheatgrass (Pascopyrum smithii) at 5.6 pounds per acre, Oats (Avena sativa) at 4.0 pounds per acre, Cereal Rye Grain (Secale cereale) at 45 pounds per acre. Contractor must ensure that any seed application requiring a cool season cover crop does not utilize annual ryegrass (Lolium multiflorum) or perennial ryegrass (Lolium perenne). Cool season cover crops are not permanent erosion control.

2. From March 2 to September 14, seeding shall be with hulled Bermuda at a rate of 45 pounds per acre or a native plant seed mix conforming to Item 604S or 609S.

A. Fertilizer shall be applied only if warranted by a soil test and shall conform to Item No. 606S, Fertilizer. Fertilization should not occur when rainfall is expected or during slow plant growth or dormancy. Chemical fertilizer may not be applied in the Critical Water Quality Zone.

B. Hydromulch shall comply with Table 1, below.

C. Temporary erosion control shall be acceptable when the grass has grown at least 1½ inches high with a minimum of 95% total coverage so that all areas of a site that rely on vegetation for temporary stabilization are uniformly vegetated, and provided there are no bare spots larger than 10 square feet.

D. When required, native plant seeding shall comply with requirements of the City of Austin Environmental Criteria Manual, and Standard Specification 604S or 609S.

Table 1: Hydromulching for Temporary Vegetative Stabilization

Material	Description	Longevity	Typical Applications	Application Rates
100% or any blend of wood, cellulose, straw, and/or cotton plant material (except no mulch shall exceed 30% paper)	70% or greater Wood/Straw 30% or less Paper or Natural Fibers	0–3 months	Moderate slopes; from flat to 3:1	1,500 to 2,000 lbs per acre

PERMANENT VEGETATIVE STABILIZATION NOTES:

1. From September 15 to March 1, seeding is considered to be temporary stabilization only. If cool season cover crops exist where permanent vegetative stabilization is desired, the grasses shall be mowed to a height of less than one-half (½) inch and the area shall be re-seeded in accordance with Table 2 below. Alternatively, the cool season cover crop can be mixed with Bermudagrass or native seed and installed together, understanding that germination of warm-season seed typically requires soil temperatures of 60 to 70 degrees.

2. From March 2 to September 14, seeding shall be with hulled Bermuda at a rate of 45 pounds per acre with a purity of 95% and a minimum pure live seed (PLS) of 0.83. Bermuda grass is a warm season grass and is considered permanent erosion control. Permanent vegetative stabilization can also be accomplished with a native plant seed mix conforming to Item 604S or 609S.

A. Fertilizer use shall follow the recommendation of a soil test. See Item 606S, Fertilizer. Applications of fertilizer (and pesticide) on City-owned and managed property requires the yearly submittal of a Pesticide and Fertilizer Application Record, along with a current copy of the applicator's license. For current copy of the record template contact the City of Austin's IPM Coordinator.

B. Hydromulch shall comply with Table 2, below.

C. Water the seeded areas immediately after installation to achieve germination and a healthy stand of plants that can ultimately survive without supplemental water. Apply the water uniformly to the planted areas without causing displacement or erosion of the materials or soil. Maintain the seedbed in a moist condition favorable for plant growth. All watering shall comply with City Code Chapter 6-4 (Water Conservation), at rates and frequencies determined by a licensed irrigator or other qualified professional, and as allowed by the Austin Water Utility and current water restrictions and water conservation initiatives.

D. Permanent erosion control shall be acceptable when the grass has grown at least 1½ inches high with a minimum of 95 percent for the non-native mix, and 95 percent coverage for the native mix so that all areas of a site that rely on vegetation for stability must be uniformly vegetated, and provided there are no bare spots larger than 10 square feet.

E. When required, native plant seeding shall comply with requirements of the City of Austin Environmental Criteria Manual, Items 604S and 609S.

NOTES:

1. Initiate permanent stabilization immediately once work has ceased and final grade has been achieved in any given area.
2. The final stabilization/revegetation efforts shall be in accordance with the approved Restoration Plan details and specifications.
3. All 3:1 slopes or steeper require soil retention blanket (SRB).
4. The contractor is responsible for providing adequate watering/irrigation to achieve the permanent stabilization requirements in all disturbed/revegetated areas before final acceptance for this project can be obtained.
5. All disturbed/bare areas will require permanent stabilization before Final Acceptance can be achieved. Avoid disturbing areas of the project that are not necessary for construction.
6. Any disturbed area(s) not indicted to be restored on the restoration plan requires the same efforts as those indicated.
7. All disturbed areas must meet the requirement for permanent stabilization.
8. The notice of termination (NOT) for this project shall not be submitted until the Travis County Environmental Inspector approves clearance.

Table 2: Hydromulch for Permanent Vegetative Stabilization

Material	Description	Longevity	Typical Applications	Application Rates
Bonded Fiber Matrix (BFM)	80% Organic defibrated fibers 10% Tackifier	6 Months	On slopes up to 2:1 and erosive soil conditions	2,500 to 4,000 lbs per acre (see manufacturers recommendations)
Fiber Reinforced Matrix (FRM)	65% Organic defibrated fibers 25% Reinforcing Fibers or less 10% Tackifier	Up to 12 Months	On slopes up to 1:1 and erosive soil conditions	3,000 to 4,500 lbs per acre (see manufacturers recommendations)

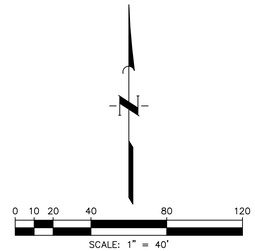

NO.	DATE	REVISIONS	APP.

WILBARGER CREEK M.U.D. No. 2
TRAVIS COUNTY, TEXAS

WASTEWATER TREATMENT PLANT EXPANSION TO 1.5 MGD

SITE RESTORATION DETAILS

QUIDDITY
Texas Board of Professional Engineers and Land Surveyors Reg. No. F-23290
912 South Capital of Texas Hwy, Suite 300 • Austin, TX 78746 • 512.441.9493

SCALE: 1" = 40' DGN. BY: HLC
DATE: JUNE 2026 DWN. BY: HLC
JOB NO. 0A651-0021-02 DWG. NO.
SUBMITTED: SURV. BY:
F.B. NO.

STATE OF TEXAS
RYAN W. LaMARRE
143835
LICENSED PROFESSIONAL ENGINEER
5/29/2026

0-C-34
SHEET NO. 44 OF 230

C:\Users\hc\DC\ACCDocs\Quiddity – Water-\0A651-0021-02 _ WILBARGER WWTP EXP. 1.5 MGD\Project Files\PLANS\SITE\SITE 10-29.dwg, May 18, 2026 – 11:42am, hc

0 1 2 3 4 5 ORIGINAL SCALE IN INCHES FOR REDUCED PLANS

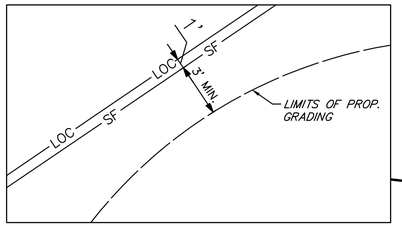

TYP. DETAIL A
NTS

NOTES:

1. CONTRACTOR TO RESTORE EXISTING 6" CONCRETE PAVEMENT DAMAGED BY CONSTRUCTION ACTIVITIES TO THE NEAREST JOINT AT NO ADDITIONAL COST.
2. CONTRACTOR TO REMOVE ANY COLLECTED SEDIMENT OR DEBRIS DURING THE CONSTRUCTION ONCE CONSTRUCTION ACTIVITIES HAVE COMMENCED.

ESC NOTES:

1. If a concrete washout is to be utilized during construction add a note on the plan sheets that states that the location will be determined once construction has begun and will be properly notated on the site map at that time.
2. All required Notices and Permits must be placed in a highly visible location onsite before the commencement of construction.
3. All erosion and sediment controls (ESC) must be installed prior to any disturbance to the project site.
4. Install silt fence accordingly for run-on diversion or offsite sediment control depending on up or down slope, facing post side on the down gradient side.
5. All ESC used onsite must be regularly monitored and maintained as needed.
6. Mud and or dirt tracked into the roadway must be immediately removed upon discovery.
7. Excess materials that will be transported to an offsite location must have that location cleared by County Inspector.
8. Loose trash and debris must be disposed of properly on site.
9. Contractor shall maintain and utilize dust control for the duration of the project.
10. The Stabilized Construction Entrance shall be maintained in a condition that prevents tracking onto the public roadway on an ongoing/regular basis.
11. Inlet protection shall be installed immediately upon inlet installation.
12. Initiate temporary stabilization when construction ceases in a disturbed area for 14 days.
13. Initiate permanent stabilization immediately once work has ceased and final grade has been achieved.
14. All disturbed/bare areas will require permanent stabilization before Final Acceptance ca be achieved. Avoid disturbing areas of the project that are not necessary for construction.
15. County Inspector may request additional controls be installed onsite as needed.
16. Temporary ESC's shall remain in place in all disturbed areas until adequate stabilization has been achieved.
17. Contractor must remove sediment from all Storm Sewer Inlet Boxes, Lines, Pipes and Culverts before Conditional/Final Acceptance can obtained.
18. Travis County requires Certified SWP3 Inspectors to conduct SWP3 inspections and reporting on all projects with one acre of disturbance and larger.
19. Permittee shall inspect all inlet protection devices as part of the weekly SWP3 report, upon receiving a forecast calling for a rain event for an extended period, modification of inlet protection should be made to prevent flooding or ponding of water if traffic or property concerns arise.
20. Inlet protection shall be installed immediately following completion of each inlet.
21. Contact postinspection@traviscountytx.gov to schedule the following milestone inspections for the water quality structures with at least a 48 hour notice, if applicable:
    - Pre-pour of all concrete within the footprint of the WQ control or pond.
    - Placement of all rock-filled gabions/mattresses.
    - Inspection of sand/bio-filtration media and/or rock PRIOR to installing.
    - Underdrain piping PRIOR to covering with sand/bio-filtration media or rock in infiltration trench. -If covered, removal of material will be required.
    - Completion of construction.

LEGEND:

- SF — SILT FENCE
- SF — DOUBLE SILT FENCE
- LOC — LIMITS OF CONSTRUCTION
- IPB — INLET PROTECTION BARRIER
- CE — CONSTRUCTION ENTRANCE
- CTW — CONCRETE WASHOUT AREA
- WETLAND CEF
- SF — J-HOOK
- CONTRACTORS STAGING AND SPOILS AREA

TOTAL AREA OF DISTURBANCE: 6.45 AC.

TOTAL IMPERVIOUS AREA: 80242 SQ. FT.

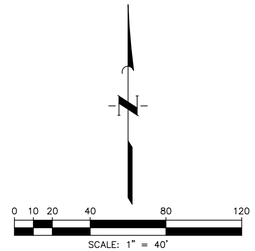

NO.	DATE	REVISIONS	APP.

WILBARGER CREEK M.U.D. No. 2
TRAVIS COUNTY, TEXAS

WASTEWATER TREATMENT PLANT EXPANSION TO 1.5 MGD

OVERALL EROSION AND SEDIMENTATION CONTROL PLAN

QUIDDITY
Texas Board of Professional Engineers and Land Surveyors Reg. No. F-23290
912 South Capital of Texas Hwy, Suite 300 • Austin, TX 78746 • 512.441.9493

SCALE:	1" = 40'	DGN. BY:	HLC
DATE:	SEPTEMBER 2026	DWN. BY:	HLC
JOB NO.	0A651-0021-02	DWG. NO.	
SUBMITTED:		SURV. BY:	
		F.B. NO.	

STATE OF TEXAS
RYAN W. LeMAIRE
143835
LICENSED PROFESSIONAL ENGINEER
09/24/2026

0-C-35
SHEET NO. 45 OF 230

C:\Users\hc\DC\ACCDocs\Quiddity - Water-\0A651-0021-02 _ WILBARGER WWTP EXP. 1.5 MGD\Project Files\PLANS\SITE\SITE 10-29.dwg, Sep 23, 2026 - 6:03pm, hc

0 1 2 3 4 5 ORIGINAL SCALE IN INCHES FOR REDUCED PLANS

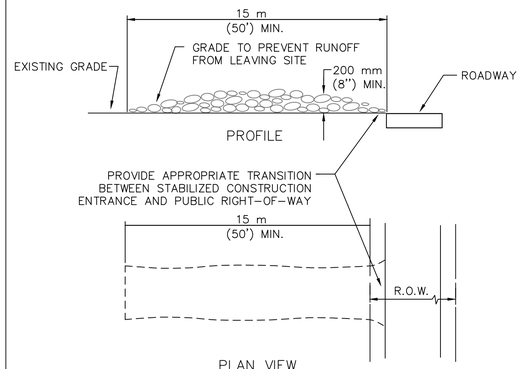

NOTES:

1. STONE SIZE: 75–125 mm (3–5") OPEN GRADED ROCK.
2. LENGTH: AS EFFECTIVE BUT NOT LESS THAN 15 m (50').
3. THICKNESS: NOT LESS THAN 200 mm (8").
4. WIDTH: NOT LESS THAN FULL WIDTH OF ALL POINTS OF INGRESS/EGRESS.
5. WASHING: WHEN NECESSARY, VEHICLE WHEELS SHALL BE CLEANED TO REMOVE SEDIMENT PRIOR TO ENTRANCE ONTO PUBLIC ROADWAY. WHEN WASHING IS REQUIRED, IT SHALL BE DONE ON AN AREA STABILIZED WITH CRUSHED STONE AND DRAINS INTO AN APPROVED TRAP OR SEDIMENT BASIN. ALL SEDIMENT SHALL BE PREVENTED FROM ENTERING ANY STORM DRAIN, DITCH OR WATERCOURSE USING APPROVED METHODS.
6. MAINTENANCE: THE ENTRANCE SHALL BE MAINTAINED IN A CONDITION THAT WILL PREVENT TRACKING OR FLOWING OF SEDIMENT ONTO PUBLIC ROADWAY. THIS MAY REQUIRE PERIODIC TOP DRESSING WITH ADDITIONAL STONE AS CONDITIONS DEMAND, AS WELL AS REPAIR AND CLEAN OUT OF ANY MEASURE DEVICES USED TO TRAP SEDIMENT. ALL SEDIMENTS THAT IS SPILLED, DROPPED, WASHED OR TRACKED ONTO PUBLIC ROADWAY MUST BE REMOVED IMMEDIATELY.
7. DRAINAGE: ENTRANCE MUST BE PROPERLY GRADED OR INCORPORATE A DRAINAGE SWALE TO PREVENT RUNOFF FROM LEAVING THE CONSTRUCTION SITE.

CITY OF AUSTIN WATERSHED PROTECTION DEPARTMENT		STABILIZED CONSTRUCTION ENTRANCE	
RECORD COPY SIGNED BY J. PATRICK MURPHY	*5/23/00* ADOPTED	THE ARCHITECT/ENGINEER ASSUMES RESPONSIBILITY FOR APPROPRIATE USE OF THIS STANDARD.	STANDARD NO. 641S-1

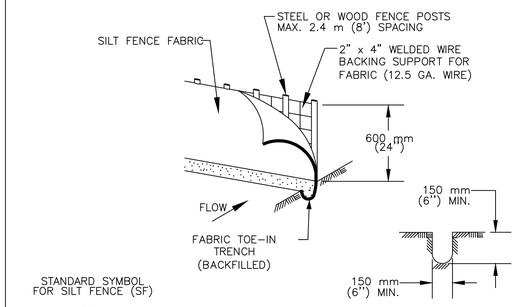

1. STEEL OR WOOD POSTS WHICH SUPPORT THE SILT FENCE SHALL BE INSTALLED ON A SLIGHT ANGLE TOWARD THE ANTICIPATED RUNOFF SOURCE. POST MUST BE EMBEDDED A MINIMUM OF 300 mm (12 INCHES). IF WOOD POSTS CANNOT ACHIEVE 300 mm (12 inches) DEPTH, USE STEEL POSTS.

2. THE TOE OF THE SILT FENCE SHALL BE TRENCHED IN WITH A SPADE OR MECHANICAL TRENCHER, SO THAT THE DOWNSLOPE FACE OF THE TRENCH IS FLAT AND PERPENDICULAR TO THE LINE OF FLOW.

3. THE TRENCH MUST BE A MINIMUM OF 150 mm (6 inches) DEEP AND 150 mm (6 inches) WIDE TO ALLOW FOR THE SILT FENCE FABRIC TO BE LAID IN THE GROUND AND BACKFILLED WITH COMPACTED MATERIAL.

4. SILT FENCE FABRIC SHOULD BE SECURELY FASTENED TO EACH STEEL OR WOOD SUPPORT POST OR TO WOVEN WIRE , WHICH IS IN TURN ATTACHED TO THE STEEL OR WOOD FENCE POST.

5. INSPECTION SHALL BE MADE WEEKLY OR AFTER EACH RAINFALL EVENT AND REPAIR OR REPLACEMENT SHALL BE MADE PROMPTY AS NEEDED.

6. SILT FENCE SHALL BE REMOVED WHEN THE SITE IS COMPLETELY STABILIZED SO AS NOT TO BLOCK OR IMPEDE STORM FLOW OR DRAINAGE.

7. ACCUMULATED SILT SHALL BE REMOVED WHEN IT REACHES A DEPTH OF 150 mm (6 inches). THE SILT SHALL BE DISPOSED OF ON AN APPROVED SITE AND IN SUCH A MANNER THAT WILL NOT CONTRIBUTE TO ADDITIONAL SILTATION.

CITY OF AUSTIN WATERSHED PROTECTION DEPARTMENT		SILT FENCE	
RECORD COPY SIGNED BY MORGAN BYARS	*09/01/2011* ADOPTED	THE ARCHITECT/ENGINEER ASSUMES RESPONSIBILITY FOR APPROPRIATE USE OF THIS STANDARD.	STANDARD NO. 642S-1

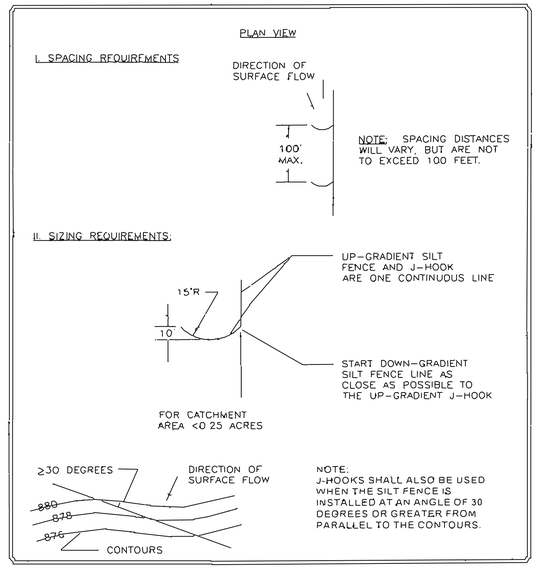

J–HOOK SILT FENCE BARRIER

SF
SYMBOL

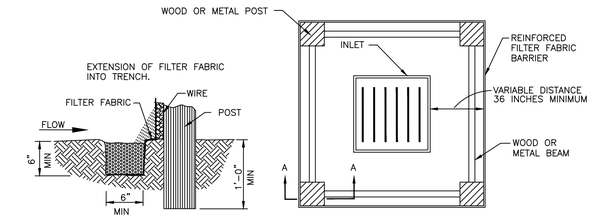

SEE REINFORCED FILTER FABRIC BARRIER DETAIL FOR REINFORCED FILTER FABRIC BARRIER REQUIREMENTS

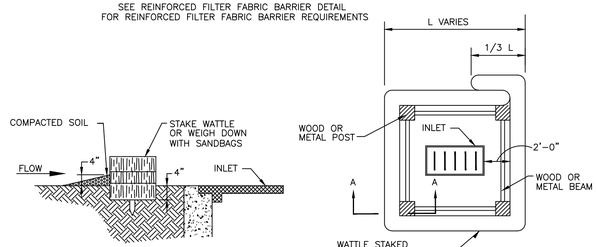

NOTE:
TYPICALLY STRAW BALES ARE NOT RECOMMENDED FOR INLET PROTECTION BARRIERS.

INLET PROTECTION BARRIERS FOR STAGE I INLETS

IPB
SYMBOL

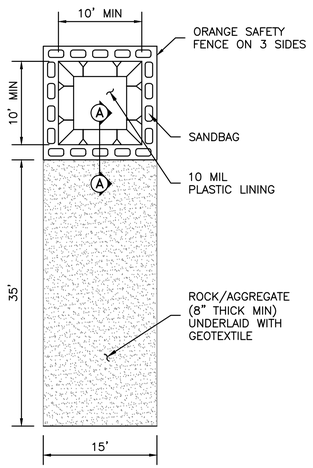

GENERAL NOTES:

1. POST A SIGN READING "CONCRETE WASHOUT PIT" NEXT TO THE PIT.
2. VERBALLY INSTRUCT THE CONCRETE TRUCK DRIVERS WHERE THE PIT IS AND TO WASHOUT THEIR TRUCKS IN THE PIT AND NOWHERE ELSE.
3. UPON THE CONCRETE SETTING UP (CURING, DRYING OUT), THE CONCRETE WASTE SHALL BE REMOVED FROM THE PROJECT SITE AND DISPOSED OF PROPERLY BY THE CONTRACTOR. AFTER REMOVAL OF THE CONCRETE WASTE, THE WASHOUT PIT SHALL BE FILLED WITH CLEAN FILL MATERIAL AND COMPACTED TO IN–SITU CONDITIONS, OR AS DIRECTED BY THE PROJECT SPECIFICATIONS.
4. CONCRETE WASHOUT PITS SHALL NOT BE LOCATED DIRECTLY ADJACENT TO, NOR AT ANY TIME DRAIN INTO THE STORM SEWER SYSTEM OR ANY OTHER SWALE, DITCH, OR WATERWAY.
5. CONSTRUCT ENTRY ROAD AND BOTTOM OF WASHOUT AREA TO SUPPORT EXPECTED LOADINGS FROM TRUCKS EQUIPMENT.

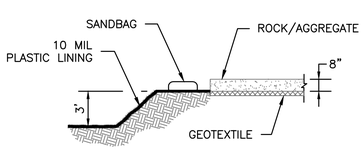

CONCRETE TRUCK WASHOUT

CTW
SYMBOL

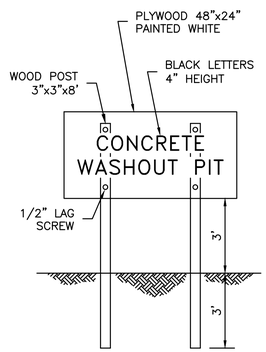

SIGN DETAIL
(OR EQUIVALENT)

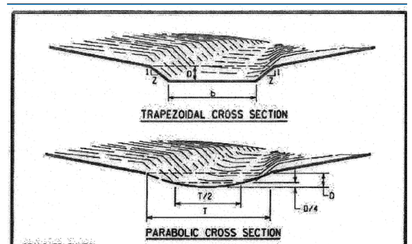

GENERAL NOTES:

1. EXCEPT AS INDICATED ON THE DRAWINGS OR DIRECTED BY THE ENGINEER OR DESIGNATED REPRESENTATIVE, ALL TREES, BRUSH, STUMPS, OBSTRUCTIONS AND OTHER OBJECTIONABLE MATERIAL SHALL BE REMOVED AND DISPOSED OF SO AS NOT TO INTERFERE WITH THE PROPER FUNCTIONING OF THE WATERWAY.

2. THE WATERWAY SHALL BE EXCAVATED OR SHAPED TO LINE, GRADE, TYPICAL SECTIONS AND CROSS-SECTION INDICATED ON THE DRAWINGS AND SHALL BE FREE OF BANK PROJECTIONS OR OTHER IRREGULARITIES, WHICH COULD IMPEDE NORMAL FLOW.

3. FILL SHALL CONFORM TO STANDARD SPECIFICATION ITEM NO. 132S, "EMBANKMENT".

4. EARTHEN CHANNELS SHALL ALWAYS BE STABILIZED WITH THE APPROPRIATE SOIL RETENTION BLANKET WHICH SHALL CONFORM TO STANDARD SPECIFICATION ITEM NO. 605S, "SOIL RETENTION BLANKET".

CITY OF AUSTIN WATERSHED PROTECTION DEPARTMENT		GRASS LINED SWALE	
	ADOPTED	THE ARCHITECT/ENGINEER ASSUMES RESPONSIBILITY FOR APPROPRIATE USE OF THIS STANDARD.	STANDARD NO. 627S-1

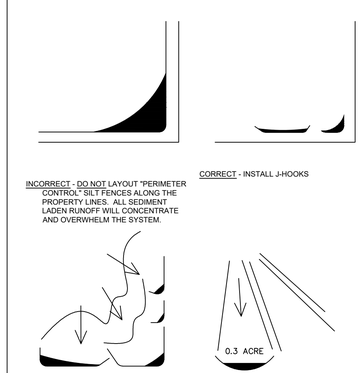

ECM FIGURE 1.4.5.G.3

NO.	DATE	REVISIONS	APP.

WILBARGER CREEK M.U.D. No. 2
TRAVIS COUNTY, TEXAS

WASTEWATER TREATMENT PLANT
EXPANSION TO 1.5 MGD

EROSION AND SEDIMENTATION CONTROL DETAILS

QUIDDITY
Texas Board of Professional Engineers and Land Surveyors Reg. No. F-23290
912 South Capital of Texas Hwy, Suite 300 • Austin, TX 78746 • 512.441.9493

SCALE:	AS SHOWN	DGN. BY:	HLC
DATE:	JUNE 2026	DWN. BY:	HLC
JOB NO.	0A651-0021-02	DWG. NO.	
SUBMITTED:		SURV. BY:	
		F.B. NO.	

STATE OF TEXAS
RYAN W. LeMARRE
143835
LICENSED
PROFESSIONAL ENGINEER
06/30/2026

0–C–36
SHEET NO. 46 OF 230

C:\Users\hc\DC\ACCDocs\Quiddity – Water–\0A651–0021–02 _ WILBARGER WWTP EXP. 1.5 MGD\Project Files\PLANS\SITE\SITE 10–29.dwg, Jun 30, 2026 – 6:52pm, hc

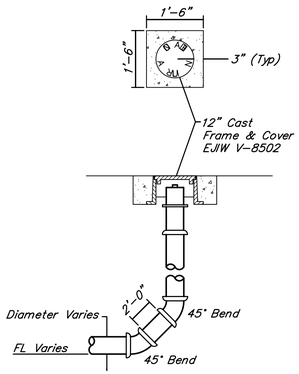

CLEANOUT DETAIL
NOT TO SCALE

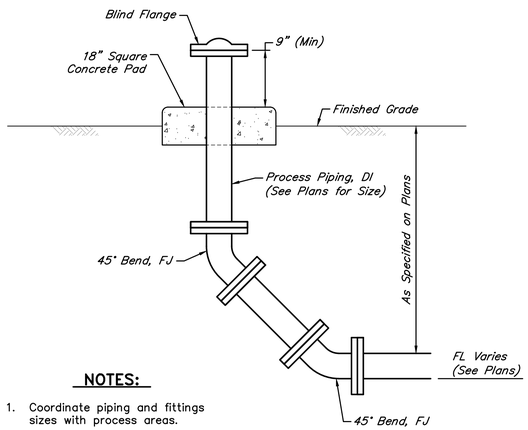

NOTES:

1. Coordinate piping and fittings sizes with process areas.

PRESSURE CLEANOUT DETAIL
NOT TO SCALE

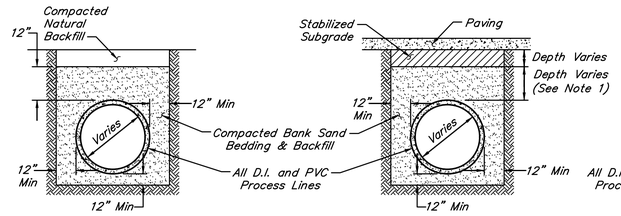

CLASS "C" BEDDING FOR PLANT PROCESS PIPING DETAIL
NOT TO SCALE

NOTES:

1. For piping that is installed under pavement at a depth of 8' or greater, install Compacted Bank Sand for the first 4' of cover over the pipe and for the first 2' of depth. The rest of the backfill can be general backfill in accordance with the geotechnical report.
2. Process piping beneath structures shall use select fill for bedding and backfill up to the bottom of the slab adhering to structural backfill and bedding requirements in accordance with the geotechnical report.

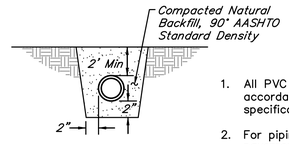

NOTE:

1. All PVC piping to be installed in accordance with manufactures specifications.
2. For piping under structures or pavement use select fill bedding and backfill in accordance with the geotechnical report.

BEDDING FOR SMALL DIAMETER (<3") PIPING DETAIL
NOT TO SCALE

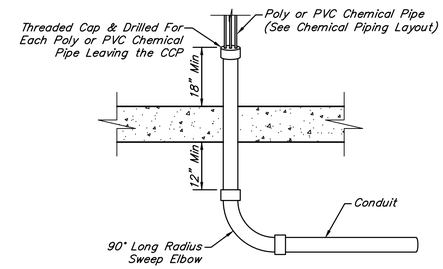

TYPICAL CHEMICAL CARRIER PIPE ABOVEGROUND PENETRATION DETAIL
NOT TO SCALE

NOTE:

All underground valves must have corresponding basin name and function stenciled on surrounding concrete.

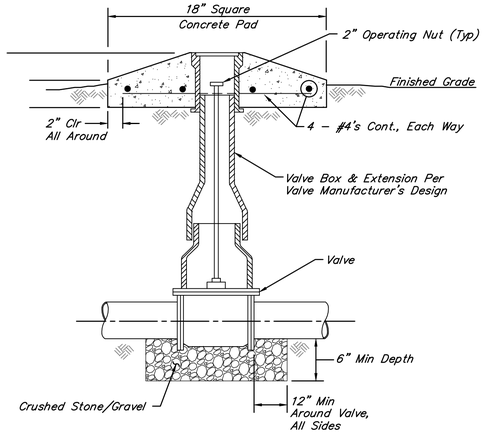

TYPICAL VALVE WITH BOX DETAIL
NOT TO SCALE

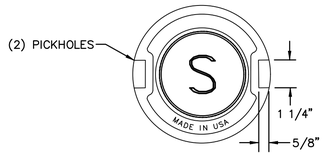

VALVE BOX COVER FOR SANITARY SEWER APPLICATIONS DETAIL
NOT TO SCALE

NOTES:

1. Valve Box Cover to be manufactured by East Jordan Iron Works, Inc. or pre-approved equal.
2. Front Cover shall have the letter "S" forged into it to denote a sanitary sewer application.
3. Back Cover shall have the following information:
   A. Made in USA
   B. Product Number
   C. Date when Product was Manufactured (MO/DAY/YR).

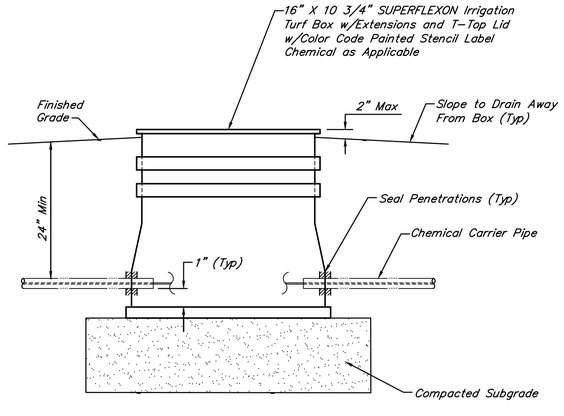

CHEMICAL CONTAINMENT PIPING PULL BOX
NOT TO SCALE

NO.	DATE	REVISIONS	APP.

WILBARGER CREEK M.U.D. No. 2
TRAVIS COUNTY, TEXAS

WASTEWATER TREATMENT PLANT EXPANSION TO 1.5 MGD

CIVIL DETAILS – SHEET 1 OF 2

QUIDDITY
Texas Board of Professional Engineers and Land Surveyors Reg. No. F-23290
912 South Capital of Texas Hwy, Suite 300 • Austin, TX 78746 • 512.441.9493

SCALE:	NONE	DGN. BY:	JCP
DATE:	JUNE 2026	DWN. BY:	SSOMERS
JOB NO.	0A651-0021-02	DWG. NO.	
SUBMITTED:		SURV. BY:	
		F.B. NO.	

STATE OF TEXAS
JORDAN ZYLBERBERG
142950
LICENSED PROFESSIONAL ENGINEER
7/2/26

0-C-37
SHEET NO. 47 OF 230

0 1 2 3 4 5 ORIGINAL SCALE IN INCHES FOR REDUCED PLANS

MANHOLE NOTES:

1. Depth of manhole determines sections required.
2. Precast concrete rings shall be provided for a combined adjustment height of at least 12". The total height of the adjustment rings shall not exceed 1'–6".
3. Manhole wall thickness for depth exceeding 12'–0" shall be determined to meet loading conditions. Min thickness 5".
4. Manhole drop and intersecting pipes shall be installed only when called for in plan and profile drawing.
5. Seat manhole frame in sealant per specifications.
6. Eccentric precast concrete manhole may be used only with prior approval by Engineer.
7. Omit cement mortar when manhole is located in paved areas.
8. Min reinforcing in the precast concrete base shall be #5 @ 8 EW.
9. Provide backfill to match adjacent pipe trench backfill per specifications.
10. Provide a minimum of 80 mils 100% solids epoxy coating for entire interior of proposed manhole.
11. All interior surfaces shall be coated with Raven 405, or pre–approved equal, applied in accordance with manufacturer's recommendations (80 mil DFT min thickness).

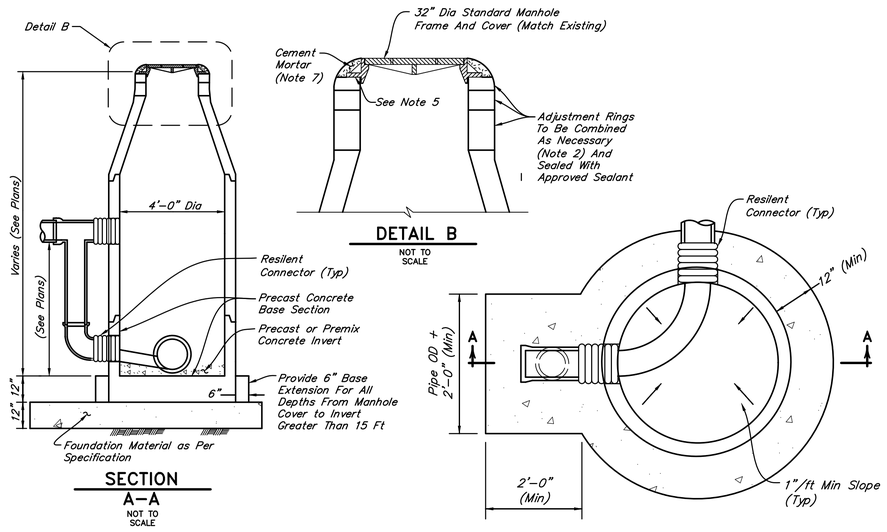

SECTION A–A
NOT TO SCALE

DETAIL B
NOT TO SCALE

FOUNDATION PLAN DETAIL
NOT TO SCALE

PRECAST 4' MANHOLE WITH DROP DETAIL
NOT TO SCALE

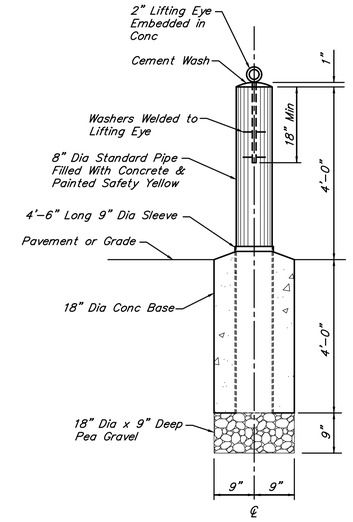

REMOVABLE BOLLARD DETAIL
NOT TO SCALE

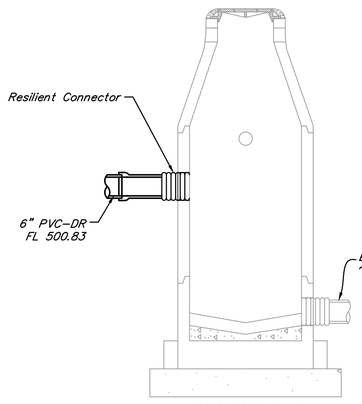

SECTION A–A

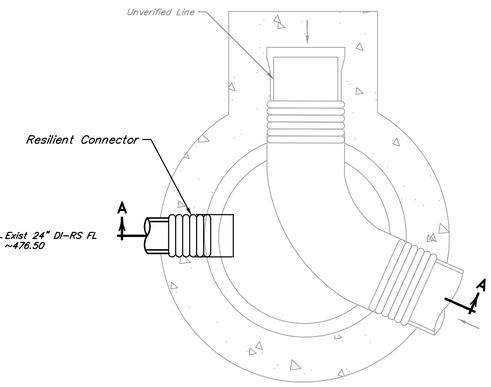

FOUNDATION PLAN

MANHOLE NOTES:

1. The Contractor shall connect the proposed 6–inch sanitary sewer line to the sanitary sewer manhole by means of core and boot at specified flowline. The opening in the side of the manhole shall not be more than 3–inches nor less than 1–inch greater in diameter than the outside diameter for the proposed pipe. The proposed pipe shall not protrude more than 3–inches past the inside face of the manhole wall. Fill the entire void around the proposed pipe with non–shrink waterproof grout. The contractor shall backfill the excavation around the existing manhole with cement–sand.
2. Piping in section view rotated for clarity.

PRECAST MANHOLE
NOT TO SCALE

NO.	DATE	REVISIONS	APP.

WILBARGER CREEK M.U.D. No. 2
TRAVIS COUNTY, TEXAS

WASTEWATER TREATMENT PLANT EXPANSION TO 1.5 MGD

CIVIL DETAILS – SHEET 2 OF 2

QUIDDITY
Texas Board of Professional Engineers and Land Surveyors Reg. No. F-23290
912 South Capital of Texas Hwy, Suite 300 • Austin, TX 78746 • 512.441.9493

SCALE:	NONE	DGN. BY:	JCP
DATE:	JUNE 2026	DWN. BY:	SSOMERS
JOB NO.	0A651–0021–02	DWG. NO.	
SUBMITTED:		SURV. BY:	
		F.B. NO.	

STATE OF TEXAS
JORDAN ZYLBERBERG
142350
LICENSED PROFESSIONAL ENGINEER
7/2/26

0–C–38
SHEET NO. 48 OF 230

C:\Users\JAS\DC\ACCDocs\Quiddity\0A651–0021–02 _ WILBARGER WWTP EXP. 1.5 MGD\Project Files\PLANS\CIVIL DETAILS.dwg, Jun 30, 2026 – 8:16am, JAS

NOTES:

1. THIS DETAIL MAY BE USED ONLY FOR DRY STABLE TRENCH CONDITIONS.
2. MIN TRENCH WIDTH SHALL BE PIPE OD PLUS AN ALLOWANCE "A" FOR THE NOMINAL PIPE SIZE:

NOMINAL PIPE SIZE	"A"
18" TO 30"	24"
OVER 30"	36"

3. MAX TRENCH WIDTH SHALL BE NOT GREATER THAN MIN TRENCH WIDTH PLUS 24 INCHES. UNLESS OTHERWSE NOTED.

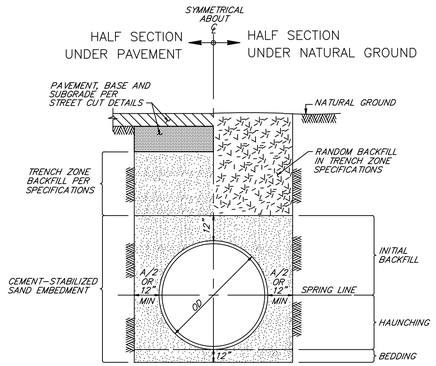

TYPICAL CROSS-SECTION

SANITARY OR STORM SEWER BEDDING AND BACKFILL FOR DRY STABLE TRENCH

N.T.S.

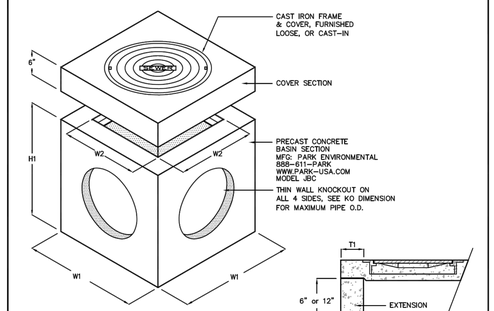

PARTIAL SECTION

MODEL # JUNCTION BOX	DIMENSIONS W1	W2	H1	H2	T1	KO	COVER SIZE (ID)	WEIGHT LBS
JBC-18	24"	16"	34"	30"	4"	15"	15" DIA	1,200
JBC-20	28"	18"	34"	30"	4"	17"	15" DIA	1,535
JBC-24	32"	22"	41"	36"	5"	22"	18" DIA	2,500
JBC-27	37"	25"	42"	36"	6"	24"	24" DIA	3,000
JBC-30	42"	30"	42"	36"	6"	30"	24" DIA	3,800
JBC-36	48"	36"	42"	36"	6"	32"	24" DIA	4,900
JBC-48	60"	48"	54"	48"	6"	44"	24" DIA	9,150
JBC-60	72"	60"	66"	60"	6"	56"	24" DIA	13,650

© Park 2009

SPECIFICATIONS

CONCRETE : Class 1 concrete with of design strength of 4500 PSI at 28 days. Unit is of monolithic construction at floor and first stage of wall with sectional riser to required depth.

REINFORCEMENT: Grade 60 reinforced. Steel rebar conforming to ASTM A615 on required centers or equal.

C.I. CASTINGS: Cast iron frames and grates are manufactured of grey cast iron conforming to ASTM A48-76 Class 30.

PARK ENVIRONMENTAL EQUIPMENT 888-611-PARK www.park-USA.com

"Expect the Best"

JUNCTION BOX MODEL JBC - 18" THRU 60"

SCALE	NONE	DWG. NO.	JBC-1	REV.
DATE	12/09			A

3299CGSQSB

APPROX. GRATE DRAIN AREA = 551.25 SQ IN
*APPROX. WEIGHT WITH FRAME = 249.00 LBS

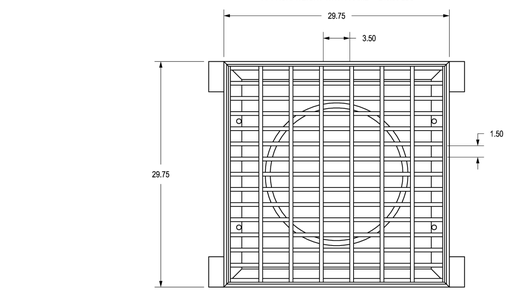

TOP OF BASE PLATE TO TOP OF DRAIN BASIN
12BASEG: 2.82
15BASEG: 2.82
18BASEG: 2.82
24BASEG: 2.82
30BASEG: .38

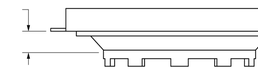

*WEIGHT DOES NOT INCLUDE DUCTILE IRON BASE PLATE
12BASEG: APPROX. 109.00 LBS
15BASEG: APPROX. 98.00 LBS
18BASEG: APPROX. 85.00 LBS
24BASEG: APPROX. 93.00 LBS
30BASEG: APPROX. 82.00 LBS

ALL DIMENSIONS IN INCHES UNLESS NOTED OTHERWISE
GRATE MEETS H-20 LOAD RATING
QUALITY: FRAME & GRATE MATERIALS SHALL CONFORM TO ASTM A-36 STEEL, BASE PLATE MATERIALS SHALL CONFORM TO ASTM A536 GRADE 70-50-05 DUCTILE IRON
LOCKING DEVICE AVAILABLE UPON REQUEST SEE DRAWING NO. 7001-110-256

THIS PRINT DISCLOSES SUBJECT MATTER IN WHICH NYLOPLAST HAS PROPRIETARY RIGHTS. THE RECEIPT OR POSSESSION OF THIS PRINT DOES NOT CONFER, TRANSFER, OR LICENSE THE USE OF THE DESIGN OR TECHNICAL INFORMATION SHOWN HEREIN. REPRODUCTION OF THIS PRINT OR ANY INFORMATION CONTAINED HEREIN, OR MANUFACTURE OF ANY ARTICLE HEREFROM, FOR THE DISCLOSURE TO OTHERS IS FORBIDDEN, EXCEPT BY SPECIFIC WRITTEN PERMISSION FROM NYLOPLAST. 6/2013 NYLOPLAST

DRAWN BY	CJA	MATERIAL	
DATE	02-28-03		
REVISED BY	CCA	PROJECT NO./NAME	
DATE	09-04-13		
DWG SIZE	A	SCALE 1:10	SHEET 1 OF 1

Nyloplast 3126 VERONA AVE BUFORD, GA 30518 PHN (770) 932-2443 FAX (770) 932-2490 www.nyloplast-us.com

TITLE: 2 FT X 2 FT STEEL BAR GRATE ASSEMBLY

DWG NO. 7001-110-258 REV F

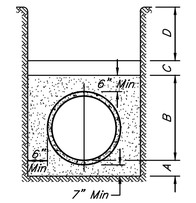

LEGEND:

A – Cement stabilized sand placed before pipe is laid up to flowline of pipe or above (minimum depth 7").
B – Cement stabilized sand, thoroughly rodded, placed after pipe is laid.
C – Earth fill placed same day pipe is laid.
D – Earth fill placed next day (or later) after pipe is laid.

CLASS "AA" BEDDING FOR PIPE SEWERS

36" DIAMETER AND SMALLER
NOT TO SCALE

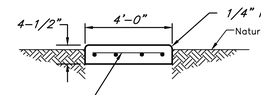

NOTE:
Provide construction joints at every 4' and expansion joints at every 36'. (See detail sheet 0-C-38)

TYPICAL CONCRETE SIDEWALK DETAIL

NOT TO SCALE

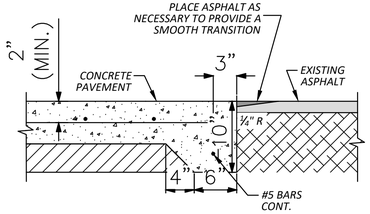

ASPHALT TO CONCRETE PAVEMENT HEADER

NOT TO SCALE

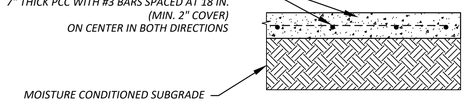

(REFER TO GEOTECHNICAL ENGINEERING REPORT FOR WILBARGER CREEK MUD 2 WWTP EXPANSION FOR RECOMMENDATIONS ON "TRAFFIC CATEGORY E" WITH 7" PAVEMENT)

All pavement sections shall match the Geotechnical Engineering Report by Terracon Consultants Inc. (Terracon Project Number 96255135).

RIGID PAVEMENT SECTION

N.T.S.

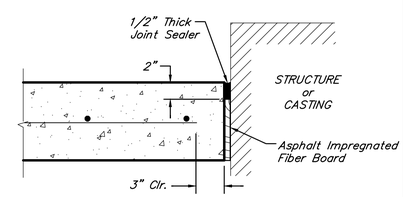

ISOLATION JOINT

NOT TO SCALE

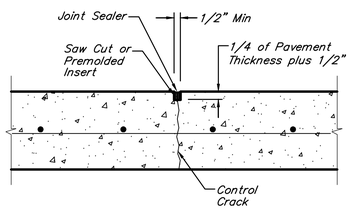

SAW-CUT CONTROL JOINT

NOT TO SCALE

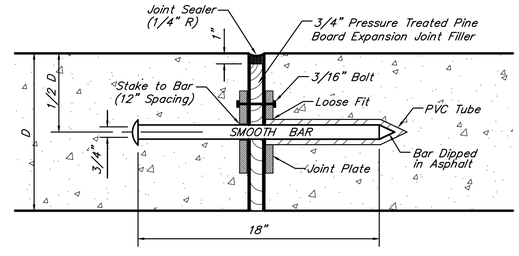

PAVEMENT EXPANSION JOINT

NOT TO SCALE

REPAIR OF FULL DEPTH ASPHALTIC CONCRETE (UCM SECTION 5.5.13)

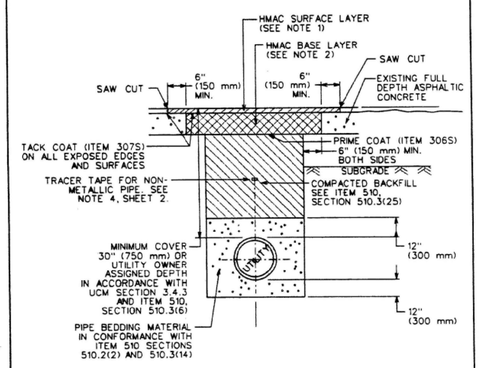

CITY OF AUSTIN DEPARTMENT OF PUBLIC WORKS	FULL DEPTH ASPHALTIC CONCRETE PAVEMENT TRENCH REPAIR	STANDARD NO.
Bill Gardner 9/14/05 ADOPTED	THE ARCHITECT/ENGINEER ASSUMES RESPONSIBILITY FOR APPROPRIATE USE OF THIS STANDARD.	1100S-5 1 OF 2

NOTES:

1. REPLACEMENT AC SURFACE LAYER SHALL BE OF THE TYPE AND THICKNESS BASED ON FUNCTIONAL CLASSIFICATION.
   a) MIN. 2" (50 mm) HMAC TYPE "D" FOR TRENCH REPAIR IN LOCAL/RESIDENTIAL STREETS.
   b) MIN. 3" (75 mm) HMAC TYPE "C" FOR TRENCH REPAIR IN COLLECTOR/ARTERIAL STREETS.
   SEE ITEM 340S, SECTION 340S.4.
2. THE COMBINED THICKNESS OF THE REPLACEMENT AC SURFACE AND BASE LAYERS SHALL MATCH THE THICKNESS OF EXISTING FULL DEPTH AC LAYER. HOWEVER, THE REPLACEMENT AC BASE LAYER SHALL BE A MINIMUM THICKNESS OF 6" (150 mm) OF TYPE A OR B HMA. A BASE LAYER TYPE THAT MATCHES THE NEW HMA SURFACE LAYER (SEE NOTE 1) MAY BE USED, IF THE TOTAL REPAIR AREA IS LESS THAN 300 SQUARE YARDS (250 SQUARE METERS).
3. CLASS "J" PC CONCRETE (ITEM 403S) OR CONTROLLED LOW STRENGTH MATERIAL (CLSM) MAY BE SUBSTITUTED IN THESE REPAIRS FOR THE FLEXIBLE BASE AND COMPACTED BACKFILL. PC CONCRETE GREATER THAN A 2 SACK MIX WILL NOT BE ALLOWED.
4. AS PER CITY OF AUSTIN STANDARD SPECIFICATION 510, SECTION 510.2(8)(K)5, FOR ALL NON-METALLIC PIPE, DIRECTLY ABOVE THE CENTERLINE OF THE PIPE AND A MINIMUM OF 12" (300 mm) BELOW THE SUBGRADE, OR A MINIMUM OF 18" (450 mm) BELOW FINISHED GRADE ON AREAS OUTSIDE THE LIMITS OF PAVEMENT, SHALL BE PLACED INDUCTIVE TRACER TAPE IN ACCORDANCE WITH THE MANUFACTURER'S REQUIREMENTS. THE TAPE SHALL BE ENCASED IN A PROTECTIVE, INERT, PLASTIC JACKET AND COLOR CODED IN ACCORDANCE WITH APWA UNIFORM COLOR CODE.

CITY OF AUSTIN DEPARTMENT OF PUBLIC WORKS	FULL DEPTH ASPHALTIC CONCRETE PAVEMENT TRENCH REPAIR	STANDARD NO.
Bill Gardner 9/14/05 ADOPTED	THE ARCHITECT/ENGINEER ASSUMES RESPONSIBILITY FOR APPROPRIATE USE OF THIS STANDARD.	1100S-5 2 OF 2

Portland Cement Reinforced Concrete

Layer [2]	Thickness (inches) [1]					
	Traffic Category A		Traffic Category B		Traffic Category E	
Reinforced PCC	5.0		6.0	5.5	7.0 [4]	6.5
Lime-Treated Subgrade [3]	---	8.0	---	8.0	---	8.0
Moisture Conditioned Subgrade [5]	18.0	10.0	18.0	10.0	18.0	10.0

1. See **Project Description** for more specifics regarding traffic classifications.
2. All materials should meet the current specifications as outlined in **Pavement Materials** below.
3. If the fat clay pavement subgrade is to be lime-treated, sulfate testing should be performed on the actual final pavement subgrade soils prior to any lime treatment.
4. For fire lanes to withstand the occasional HS-20 loading of 32,000 pounds per axle and up to 90,000-pound gross truck weight, use Traffic Category E pavements or thicker.
5. Due to the potential of encountering Stratum 1 fill soils in the pavement areas, we recommend either the subgrade be moisture conditioned toa depth of 18 inches below the concrete pavements if a moisture conditioned subgrade only section is considered, or the subgrade be moisture conditioned to 10 inches with 8 inches of lime treated subgrade. In addition, we recommend the exposed subgrade be fully proofrolled prior to placement of the moisture conditioned subgrade.

NO.	DATE	REVISIONS	APP.

WILBARGER CREEK M.U.D. No. 2
TRAVIS COUNTY, TEXAS

WASTEWATER TREATMENT PLANT EXPANSION TO 1.5 MGD

SITE DETAILS

QUIDDITY
Texas Board of Professional Engineers and Land Surveyors Reg. No. F-23290
912 South Capital of Texas Hwy, Suite 300 • Austin, TX 78746 • 512.441.9493

SCALE:	AS SHOWN	DGN. BY:	HLC
DATE:	JUNE 2026	DWN. BY:	HLC
JOB NO.	0A651-0021-02	DWG. NO.	
SUBMITTED:		SURV. BY:	
		F.B. NO.	

STATE OF TEXAS RYAN W. LeMARRE 143835 LICENSED PROFESSIONAL ENGINEER 5/29/2026

0-C-39
SHEET NO. 49 OF 230

0 1 2 3 4 5 ORIGINAL SCALE IN INCHES FOR REDUCED PLANS

PRESSURE GAUGE NOTES:

1. All pipe and fittings shall be 304 SST.
2. See Instruments Specification (13340) for size & pressure ranges.
3. Orient the pressure gauge face towards the nearest walkway.

NOTE:

1. Pressure switch to be utilized in place of a pressure gauge when called for on the plans.

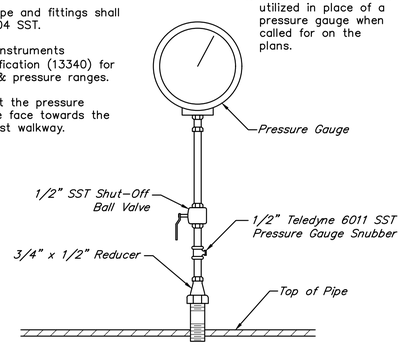

PRESSURE GAUGE/ PRESSURE SWITCH DETAIL
NOT TO SCALE

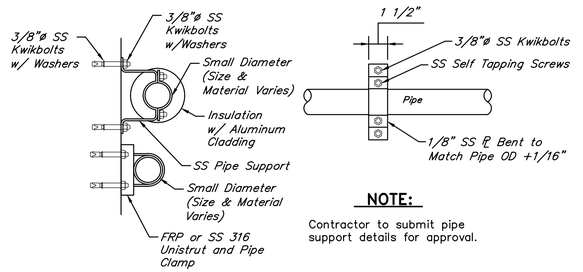

NOTE:
Contractor to submit pipe support details for approval.

SMALL DIAMETER PIPE SUPPORTS
NOT TO SCALE

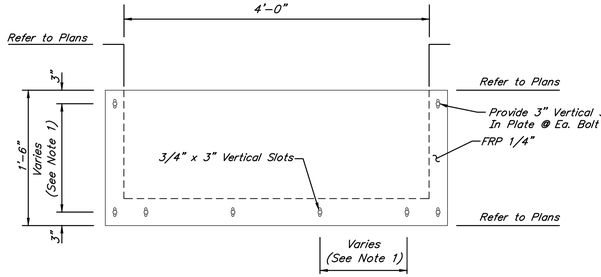

RCTW-03-101
NOT TO SCALE

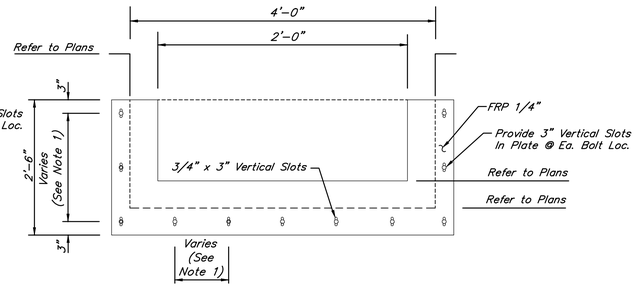

RCTW-03-201
NOT TO SCALE

HEADWORKS FLOW SPLIT WEIRS

NOTE:

1. Contractor shall field verify and match existing bolt pattern for proposed gates.

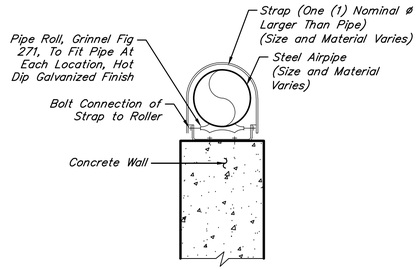

AIR PIPE SUPPORT DETAIL
NOT TO SCALE

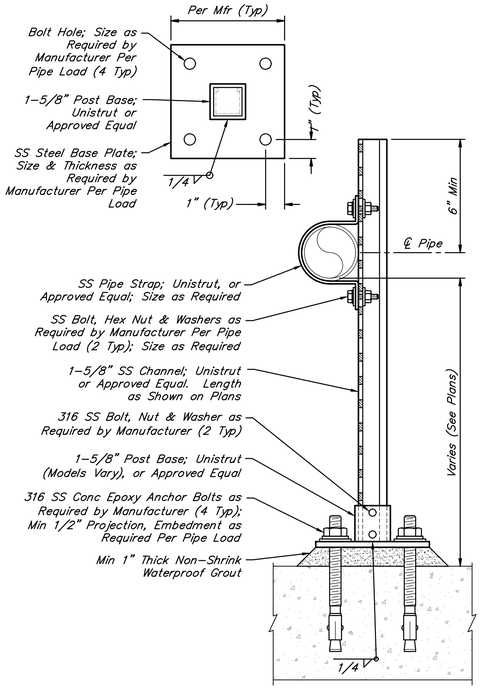

VERTICAL UNISTRUT PIPE SUPPORT DETAIL
NOT TO SCALE

NOTES:

1. All Pipe and Fittings shall be hot-dip galvanized steel, unless otherwise directed by the Engineer.
2. A Tapping Saddle may be used as approved by the Engineer.
3. All components shall be hot-dip galvanized. Apply galvanizing paint to all welds, threads and any areas scraped or damaged during construction.

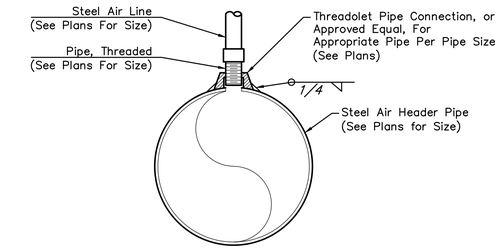

AIR HEADER PIPING WELDED OUTLET CONNECTION DETAIL
NOT TO SCALE

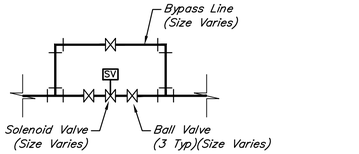

SOLENOID DETAIL
NOT TO SCALE

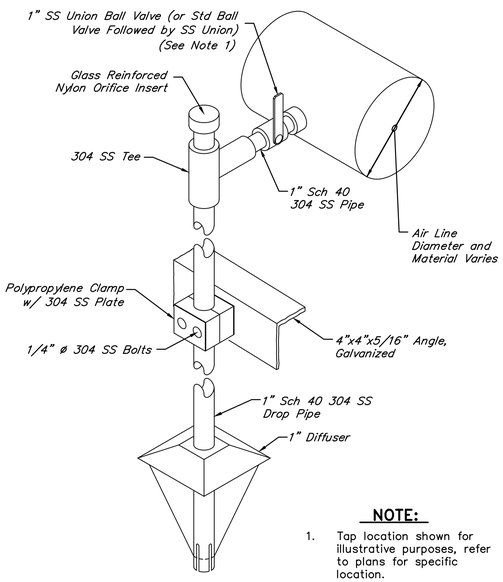

NOTE:

1. Tap location shown for illustrative purposes, refer to plans for specific location.

1" SINGLE DROP DIFFUSER
NOT TO SCALE

NOTES:

1. At the Contractor's option, and depending on the location of the water supply line, the water supply can be connected at either manufacturer provided supply connection, top or bottom.
2. Interior shower same, except without removable ABS jacket and insulation w/ heat tracing.
3. Drenching shower and eye wash per Specification 15413.

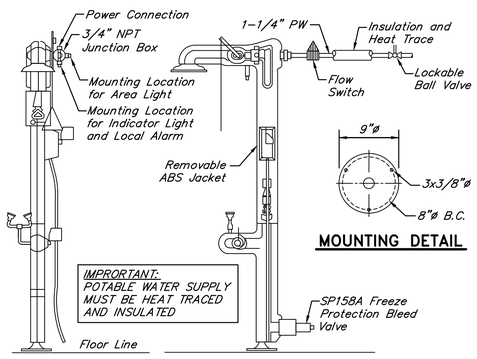

MOUNTING DETAIL

EMERGENCY SAFETY SHOWER AND EYE WASH STATION DETAIL
NOT TO SCALE

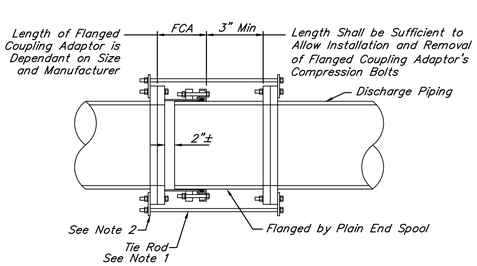

NOTES:

1. Provide a number of tie rods equal to 1/2 the number of flange bolts. Evenly space installation of tie rods. Diameter of tie rods to be equal to the diameter of flange bolts. Length of tie rods to be determined by Contractor based on size and manufacturer of flanged coupling adaptor and final length of spool piece.
2. Provide 316 S.S. tab for attachment of tie rods. Size to be determined by Contractor.
3. Contractor to submit details during shop drawing submission.
4. All hardware shall be 316 stainless steel. Tie rods should be threaded.
5. This restraint does not replace thrust blocks to be provided at other locations.

TYP FLANGED COUPLING ADAPTOR RESTRAINT
NOT TO SCALE

NO.	DATE	REVISIONS	APP.

WILBARGER CREEK M.U.D. No. 2
TRAVIS COUNTY, TEXAS

WASTEWATER TREATMENT PLANT EXPANSION TO 1.5 MGD

MECHANICAL DETAILS – SHEET 1 OF 4

QUIDDITY
Texas Board of Professional Engineers and Land Surveyors Reg. No. F-23290
912 South Capital of Texas Hwy, Suite 300 • Austin, TX 78746 • 512.441.9493

SCALE:	NONE	DGN. BY:	ZKELL
DATE:	MARCH 2026	DWN. BY:	SSOMERS
JOB NO.	0A651-0021-02	DWG. NO.	
SUBMITTED:		SURV. BY:	
		F.B. NO.	

STATE OF TEXAS
JORDAN ZYLBERBERG
142350
LICENSED PROFESSIONAL ENGINEER
3/10/26

0-M-1
SHEET NO. 49 OF 230

C:\Users\lnoldin\DC\ACCDocs\Quiddity – Water-\0A651-0021-02 _ WILBARGER WWTP EXP. 1.5 MGD\Project Files\PLANS\MECH DETAILS.dwg, Mar 09, 2026 – 12:56pm, lnoldin

0 1 2 3 4 5 ORIGINAL SCALE IN INCHES FOR REDUCED PLANS

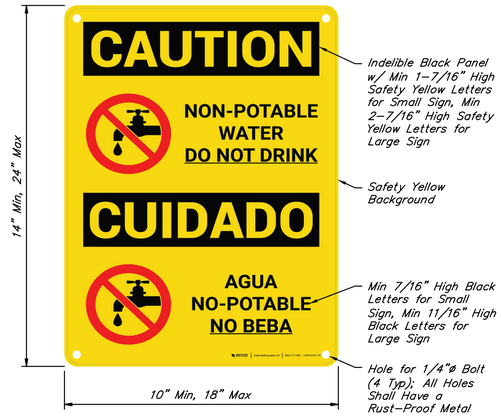

NOTES:

1. Sign material shall be semi-rigid buyrate, as manufactured by Creative Safety Supply, LLC, SKU No. WS331001, Compliance Signs, SKU No. OCB-4980, or approved equal.
2. Colors and letters shall be per OSHA standards for caution signs.
3. Sign shall be in both English and Spanish.
4. Sign shall be provided at all hose bibb locations where water is non-potable, or downstream of a backflow preventer.

WARNING SIGN FOR NON-POTABLE WATER DETAIL

NOT TO SCALE



NOTES:

1. Material shall be semi-rigid butyrate, as manufactured by Creative Safety Supply, LLC, SKU No. WS33080 (Customized), Compliance Signs, SKU No. OCB-1595 (Customized), or approved equal.
2. Colors and letters shall be per OSHA standards for caution signs.
3. Sign shall be in both English and Spanish.
4. Sign shall be provided at all valve sump locations.

WARNING SIGN FOR CHEMICAL CONTAINMENT SUMP DETAIL

NOT TO SCALE

WALL MOUNTED CHEMICAL PULL BOX SCHEDULE						
TAG	LOCATION	CHEMICAL	MATERIAL	WIDTH	HEIGHT	DEPTH
CPB-05-001	RAPID MIX BASIN NO.1	ALUM	FIBERGLASS	1'-4"	1'-6"	0'-8"
CPB-05-002	RAPID MIX BASIN NO.2	ALUM	FIBERGLASS	1'-4"	1'-6"	0'-8"

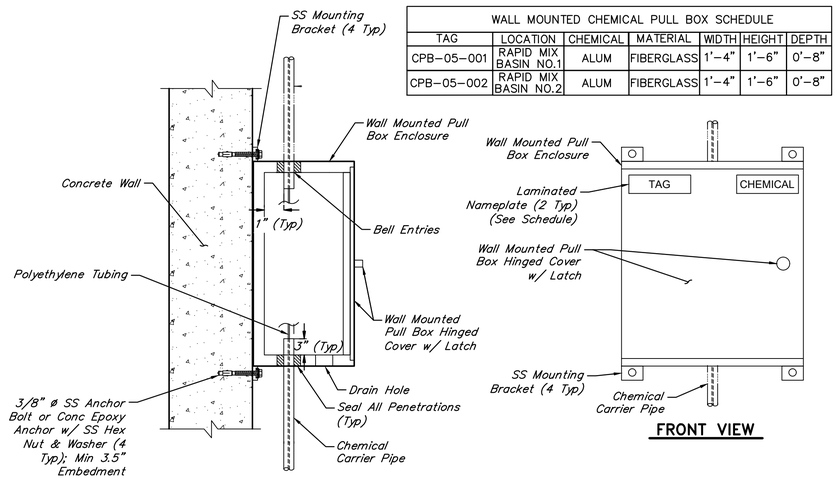

WALL MOUNTED CHEMICAL PULL BOX DETAIL

NOT TO SCALE

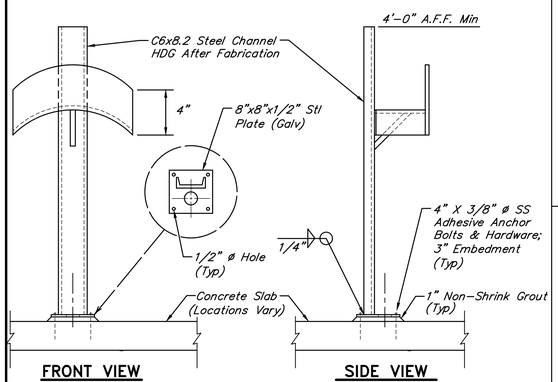

HOSE RACK DETAIL

NOT TO SCALE

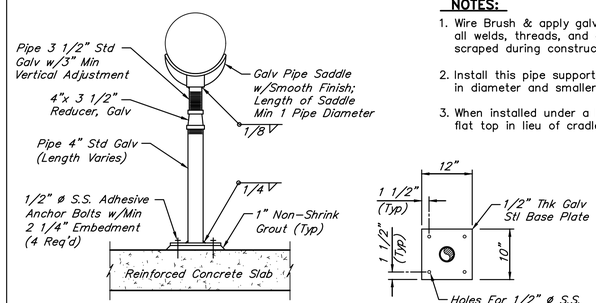

NOTES:

1. Wire Brush & apply galvanizing paint to all welds, threads, and any area scraped during construction.
2. Install this pipe support for all pipes 6" in diameter and smaller.
3. When installed under a base bend, use flat top in lieu of cradle.

4" ADJUSTABLE STEEL PIPE SUPPORT

NOT TO SCALE

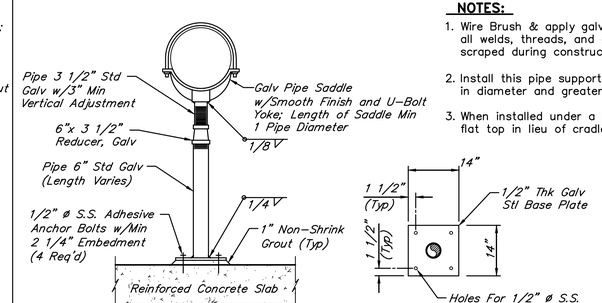

NOTES:

1. Wire Brush & apply galvanizing paint to all welds, threads, and any area scraped during construction.
2. Install this pipe support for all pipes 8" in diameter and greater.
3. When installed under a base bend, use flat top in lieu of cradle.

6" ADJUSTABLE STEEL PIPE SUPPORT WITH U-BOLT YOKE AND 14" BASE

NOT TO SCALE

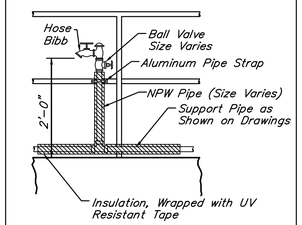

ATTACHED ON HANDRAIL

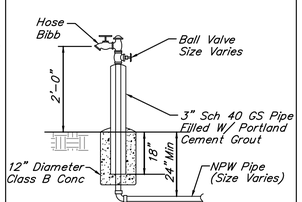

YARD LOCATION

HOSE BIBB DETAIL

NOT TO SCALE

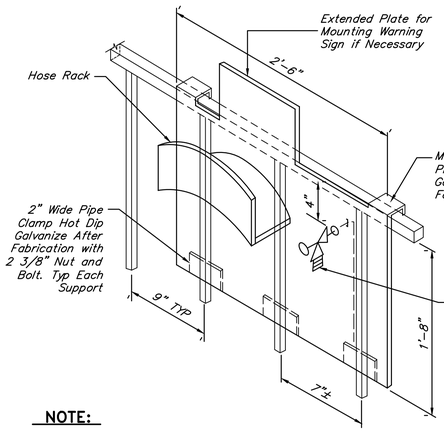

NOTE:

Provide 1/4" Neoprene Gasket between Steel Plate and Aluminum Handrailing.

RAIL MOUNTED HOSE RACK DETAIL

NOT TO SCALE

NO.	DATE	REVISIONS	APP.

WILBARGER CREEK M.U.D. No. 2
TRAVIS COUNTY, TEXAS

WASTEWATER TREATMENT PLANT EXPANSION TO 1.5 MGD

MECHANICAL DETAILS – SHEET 2 OF 4

QUIDDITY
Texas Board of Professional Engineers and Land Surveyors Reg. No. F-23290
912 South Capital of Texas Hwy, Suite 300 • Austin, TX 78746 • 512.441.9493

SCALE:	NONE	DGN. BY:	ZKELL
DATE:	FEBRUARY 2026	DWN. BY:	SSOMERS
JOB NO.	0A651-0021-02	DWG. NO.	
SUBMITTED:		SURV. BY:	
		F.B. NO.	

STATE OF TEXAS
JORDAN ZYLBERBERG
142350
LICENSED PROFESSIONAL ENGINEER
3/10/26

0-M-2
SHEET NO. 50 OF 230

C:\Users\cgular\DC\ACCDocs\Quiddity – Water-\0A651-0021-02 _ WILBARGER WWTP EXP. 1.5 MGD\Project Files\PLANS\MECH DETAILS.dwg, Feb 13, 2026 – 8:42am, cgular

0 1 2 3 4 5 ORIGINAL SCALE IN INCHES FOR REDUCED PLANS

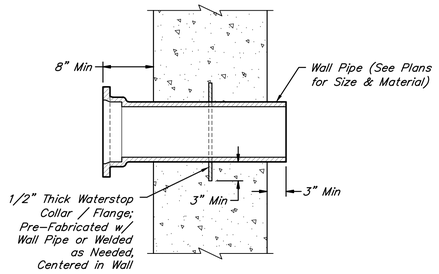

WALL PIPE: MJ x PE DETAIL
NOT TO SCALE

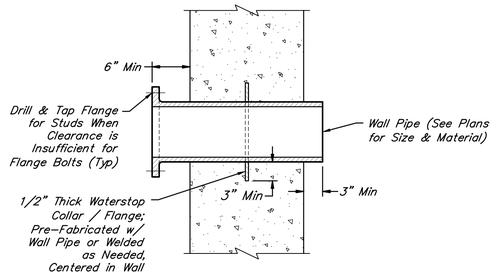

WALL PIPE: FJ x PE DETAIL
NOT TO SCALE

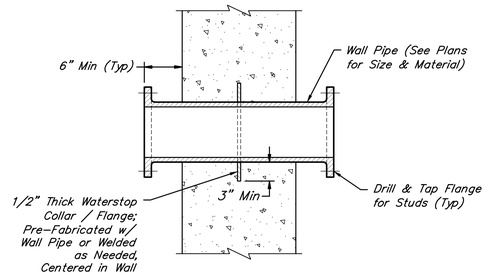

WALL PIPE: FJ x FJ DETAIL
NOT TO SCALE

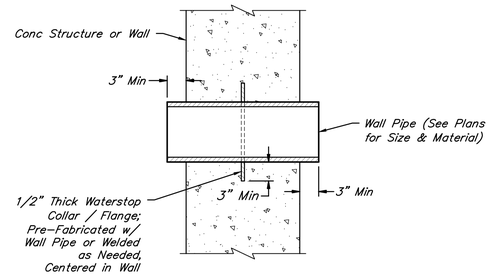

WALL PIPE: PE x PE DETAIL
NOT TO SCALE

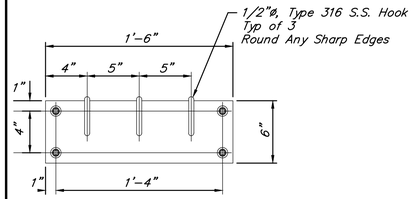

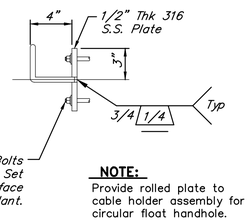

3/8"ø Type 316 S.S. Conc Anchor Bolts & Hardware w/Min 6" Embedment. Set 1/4" Neoprene Gasket on Wall Surface in Sika 1A (or Equal) Sealant.

NOTE:
Provide rolled plate to cable holder assembly for circular float handhole.

TYPICAL CABLE HOLDER ASSY
NOT TO SCALE

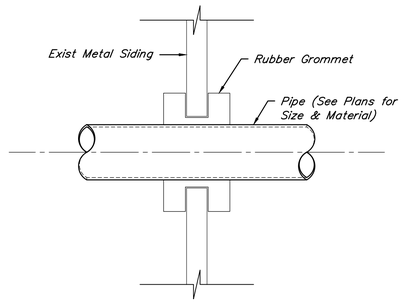

PIPE PENETRATION THROUGH METAL
NOT TO SCALE

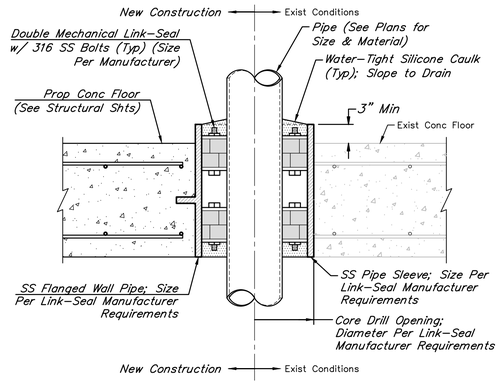

FLOOR PIPING PENETRATION
NOT TO SCALE

NOTE:

1. All piping penetrating the chlorine room shall be sealed with a chemically resistant sealant.

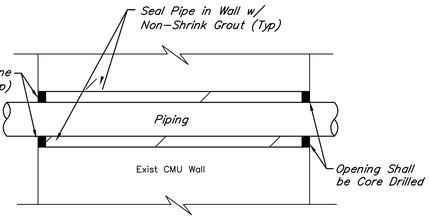

SECTION

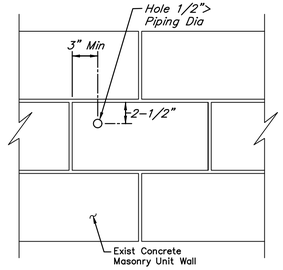

FRONT VIEW

CMU WALL PENETRATION DETAIL
NOT TO SCALE

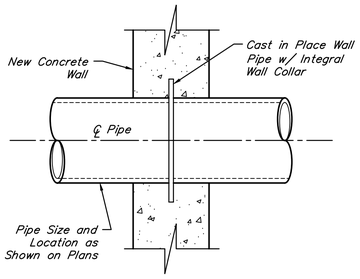

WALL COLLAR PIPE PENETRATION DETAIL
NOT TO SCALE

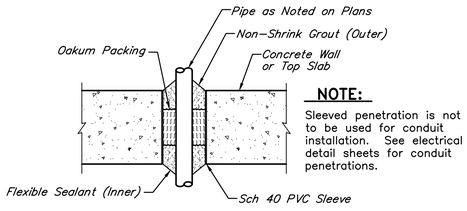

NOTE:
Sleeved penetration is not to be used for conduit installation. See electrical detail sheets for conduit penetrations.

SLEEVED PENETRATION (4" DIAMETER AND SMALLER)
NOT TO SCALE

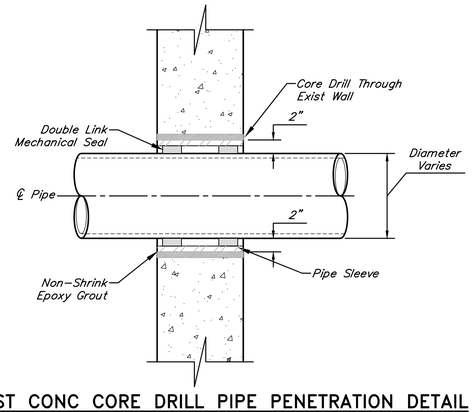

EXIST CONC CORE DRILL PIPE PENETRATION DETAIL
NOT TO SCALE

NO.	DATE	REVISIONS	APP.

WILBARGER CREEK M.U.D. No. 2
TRAVIS COUNTY, TEXAS

WASTEWATER TREATMENT PLANT EXPANSION TO 1.5 MGD

MECHANICAL DETAILS – SHEET 3 OF 4

QUIDDITY
Texas Board of Professional Engineers and Land Surveyors Reg. No. F-23290
912 South Capital of Texas Hwy, Suite 300 • Austin, TX 78746 • 512.441.9493

SCALE:	NONE	DGN. BY:	ZKELL
DATE:	FEBRUARY 2026	DWN. BY:	SSOMERS
JOB NO.	0A651-0021-02	DWG. NO.	
SUBMITTED:		SURV. BY:	
		F.B. NO.	

STATE OF TEXAS
JORDAN ZYLBERBERG
142350
LICENSED PROFESSIONAL ENGINEER
3/10/26

O-M-3
SHEET NO. 51 OF 230

C:\Users\cgular\DC\ACCDocs\Quiddity – Water-\0A651-0021-02 _ WILBARGER WWTP EXP. 1.5 MGD\Project Files\PLANS\MECH DETAILS.dwg, Feb 13, 2026 – 8:41am, cgular

0 1 2 3 4 5 ORIGINAL SCALE IN INCHES FOR REDUCED PLANS

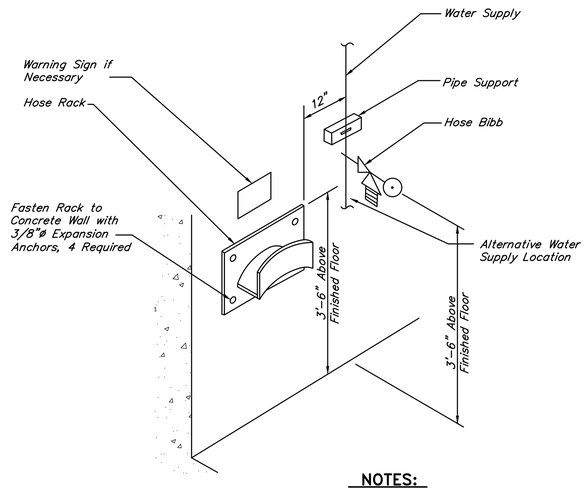

NOTES:

1. Locate water next to Hose Rack

TYPE C WALL MOUNTED UTILITY STATION DETAIL

NOT TO SCALE

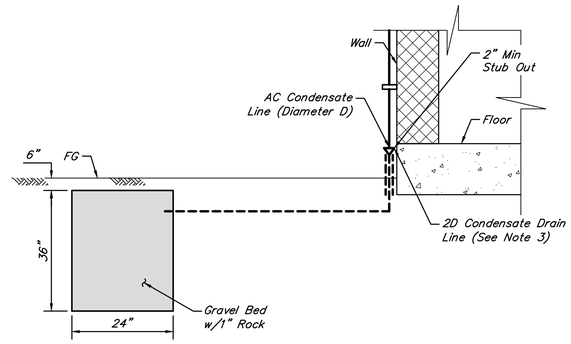

DRY WELL DETAIL

NOT TO SCALE

DRY WELL NOTES:

1. AC Waste line shall be at least 1 pipe diameter larger than the condensate line and shall be coordinated with the AC Manufacturer.
2. Support AC Condensate line to CMU w/ strut and SS hardware.
3. Provide air gap between A/C condensate line and A/C waste line in accordance with local code.
4. Detail shown for illustrative purposes only. Contractor shall route ac condensate line in accordance with submitted AC manufacturer.

NO.	DATE	REVISIONS	APP.

WILBARGER CREEK M.U.D. No. 2
TRAVIS COUNTY, TEXAS

WASTEWATER TREATMENT PLANT
EXPANSION TO 1.5 MGD

MECHANICAL DETAILS
– SHEET 4 OF 4

QUIDDITY
Texas Board of Professional Engineers and Land Surveyors Reg. No. F-23290
912 South Capital of Texas Hwy, Suite 300 • Austin, TX 78746 • 512.441.9493

SCALE:	NONE	DGN. BY:	ZKELL
DATE:	JUNE 2026	DWN. BY:	SSOMERS
JOB NO.	0A651-0021-02	DWG. NO.	
SUBMITTED:		SURV. BY:	
		F.B. NO.	

STATE OF TEXAS
JORDAN ZYLBERBERG
142350
LICENSED PROFESSIONAL ENGINEER
7/2/26

0-M-4
SHEET NO. 53 OF 230

C:\Users\JAS\DC\ACCDocs\Quiddity\0A651-0021-02 _ WILBARGER WWTP EXP. 1.5 MGD\Project Files\PLANS\MECH DETAILS.dwg, Jun 26, 2026 – 8:44am, JAS

ORIGINAL SCALE IN INCHES FOR REDUCED PLANS

0 1 2 3 4 5

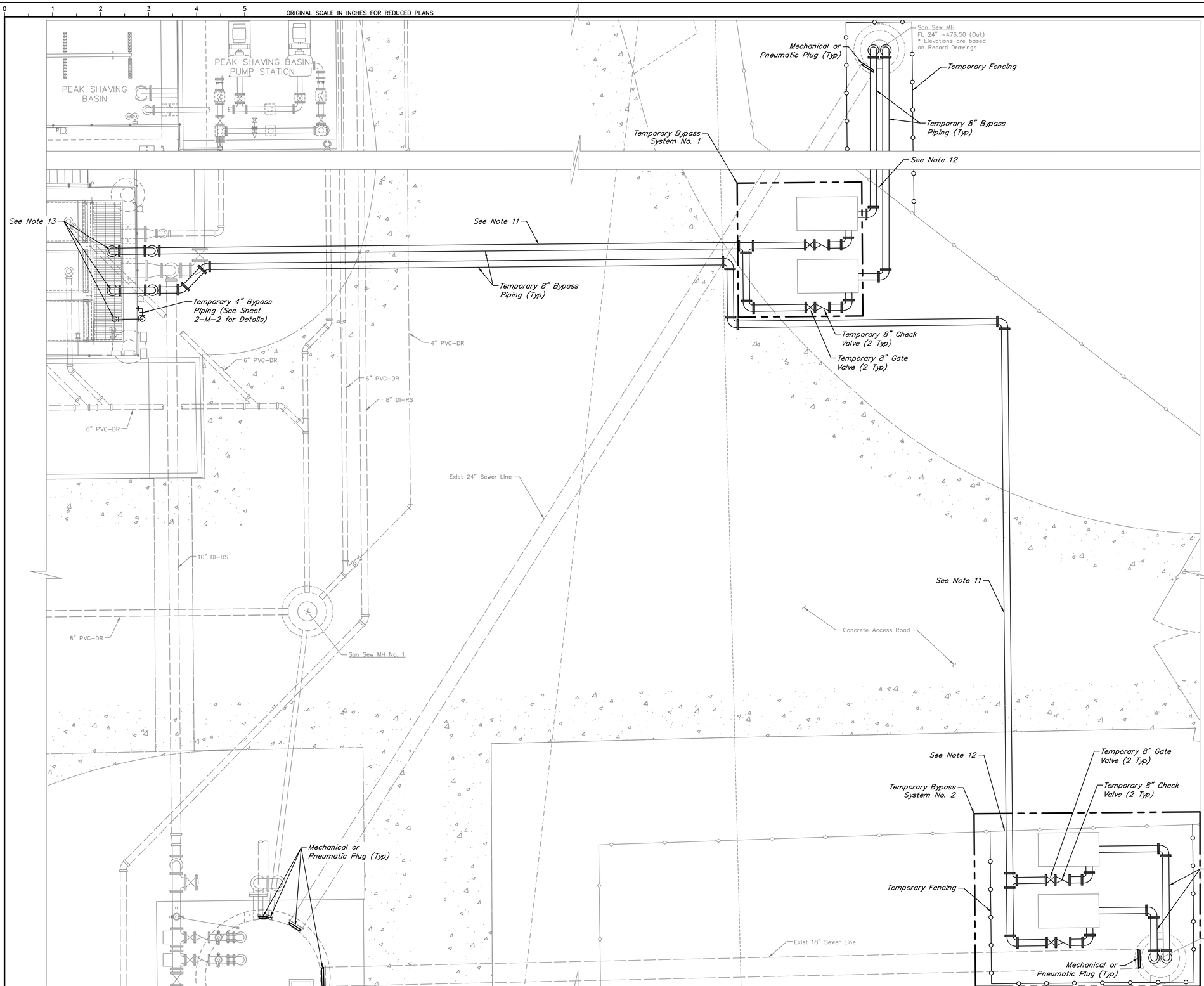

0 2.5 5 10 15

SCALE: 1" = 5'

NOTES:

1. Bypass operations for the lift station shall not be conducted during demolition and construction for the headworks weir split. See Construction Sequencing Plan on Sheet 0-G-10 for additional details.
2. The Contractor shall coordinate with the operator and the engineer 14 calendar days prior to taking the lift station off line. Contractor to coordinate with the operator to verify the maximum duration the lift station can be out of service without bypass pumping.
3. Contractor shall assume all responsibility for providing adequate system monitoring including cellular autodialer, floats, and controls; bypass set up; operation; and spills (no separate pay). Bypass pumping shall include delivery, set up, means of power for pumps & controls, and removal for the duration of the required bypass. The bypass pumping systems shall have following duty conditions.

   I. 804 GPM @ 53' TDH (BYPASS SYSTEM No. 1)
   II. 586 GPM @ 42' TDH (BYPASS SYSTEM No. 2)

4. Contractor shall install temporary plug at the manhole upstream of the lift station and at the lift station.
5. Contractor to install floats inside the existing influent manhole(s) and run conduit to the bypass system.
6. Contractor shall secure all lift station and bypass pumping equipment including the influent manhole at all times. Contractor shall provide all temporary fencing as required.
7. Contractor is responsible for leaks & cleanup related to bypass system at no additional cost to the owner.
8. Contractor to open existing manhole and install a temporary wooden lid with holes cut-out for bypass suction piping.
9. Contractor shall provide required hard piping, valves, and supports to conduct bypass operations as shown in plans and per specification 01652. Vertical suction piping installed at the manhole lids must be hard piping such as HDPE. Horizontal piping may be hard piping or hoses. All piping must have restrained joints. Provide individual suction lines and a common discharge line for each bypass system.
10. Temporary piping shall be secured to the existing headworks structure.
11. Contractor to provide road ramps rated for chemical delivery/sludge hauling trucks for all bypass piping crossing existing concrete access road.
12. Contractor shall remove existing fencing as needed for bypass operations and replace removed fencing after bypass operations are completed.
13. Contractor shall remove and store existing grating at the Headworks as needed to conduct bypass operations. Grating shall be reinstalled once bypass operations are complete.
14. Bypass discharge piping shall sweep in smooth and provide smooth discharge flow into the receiving waters. Discharge flows shall not splash or drop into receiving waters.

NO.	DATE	REVISIONS	APP.

WILBARGER CREEK M.U.D. No. 2
TRAVIS COUNTY, TEXAS

WASTEWATER TREATMENT PLANT EXPANSION TO 1.5 MGD

LIFT STATION BYPASS PLAN – SHEET 1 OF 2

QUIDDITY
Texas Board of Professional Engineers and Land Surveyors Reg. No. F-23290
912 South Capital of Texas Hwy, Suite 300 • Austin, TX 78746 • 512.441.9493

SCALE: 1"=5'	DGN. BY: ZCOOPER
DATE: MARCH 2026	DWN. BY: MKLENKE
JOB NO. 0A651-0021-02	DWG. NO.
SUBMITTED:	SURV. BY:
	F.B. NO.

STATE OF TEXAS
ZACHARY A. COOPER
156249
LICENSED PROFESSIONAL ENGINEER
3/10/26

2-M-1
SHEET NO. 53 OF 230

C:\Users\lnoldin\DC\ACCDocs\Quiddity – Water-\0A651-0021-02 _ WILBARGER WWTP EXP. 1.5 MGD\Project Files\PLANS\MECH.dwg, Mar 09, 2026 – 1:02pm, lnoldin

0 1 2 3 4 5 ORIGINAL SCALE IN INCHES FOR REDUCED PLANS

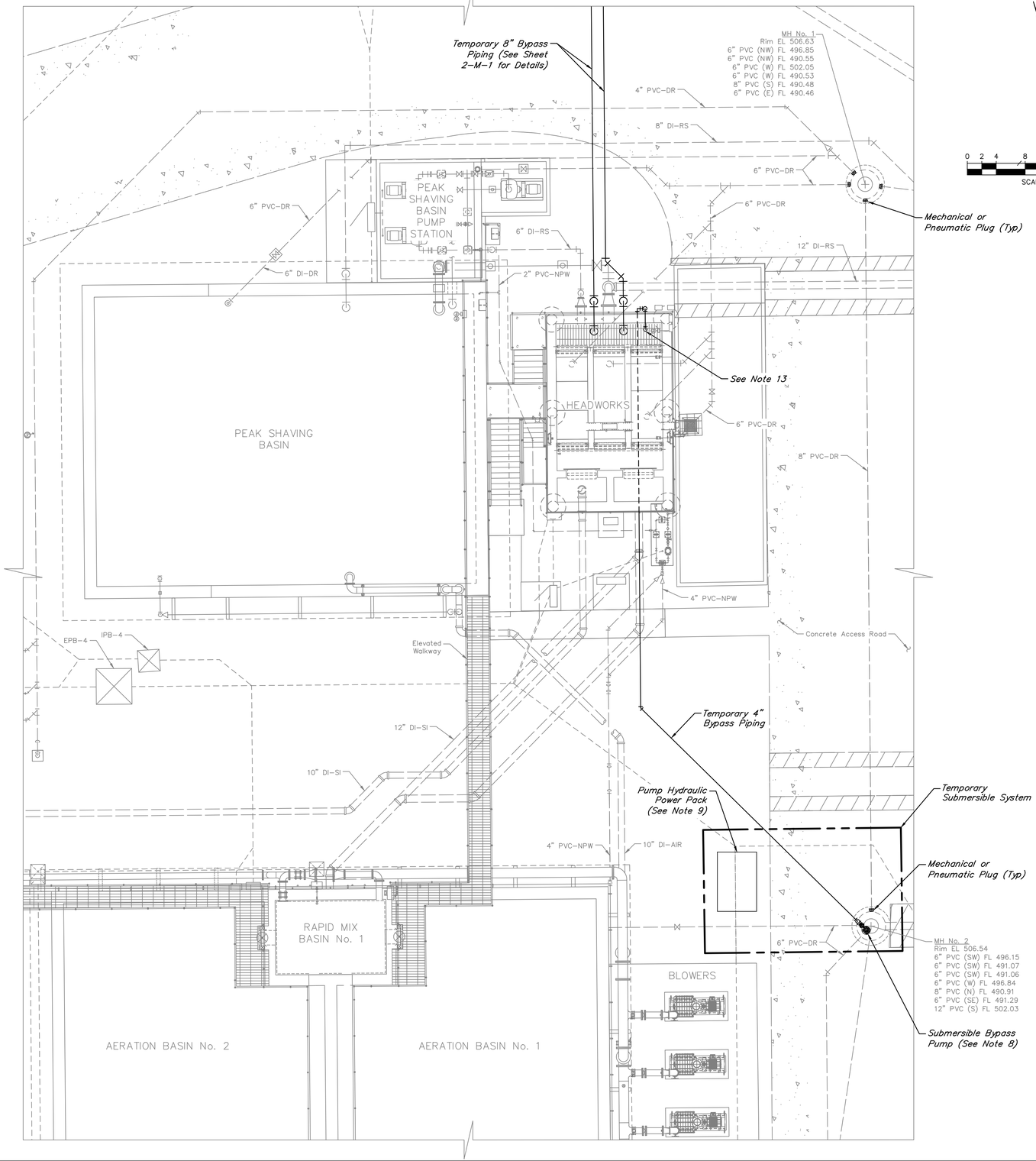

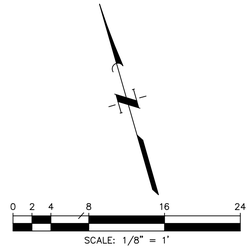

NOTES:

1. Bypass operations for the lift station shall not be conducted during demolition and construction for the headworks weir split. See Construction Sequencing Plan on Sheet 0-G-10 for additional details.
2. The contractor shall coordinate with the operator and the engineer 14 calendar days prior to taking the lift station off line. Contractor to coordinate with the operator to verify the maximum duration the lift station can be out of service without bypass pumping.
3. Contractor shall assume all responsibility for providing adequate system monitoring including cellular autodialer, floats, and controls; bypass set up; operation; and spills (no separate pay). Bypass pumping shall include delivery, set up, means of power for pumps & controls, and removal for the duration of the required bypass. The bypass pumping system shall have following duty conditions.

   130 GPM @ 36' TDH (SUBMERSIBLE SYSTEM)

4. Contractor shall install temporary plug at the manholes as shown.
5. Contractor to install floats inside the existing influent manhole (s) and run conduit to the bypass system.
6. Contractor shall secure all lift station and bypass pumping equipment at all times.
7. Contractor is responsible for leaks & cleanup related to bypass system at no additional cost to the owner.
8. Contractor to open existing MH No. 2 and install a temporary submersible bypass pump. Contractor shall install a temporary wooden lid with holes cut-out for bypass piping.
9. A diesel driven pump power module shall be placed out of the roadway and connected to the bypass pump as needed for pump operation. Ensure proper road covering for any above ground conduits.
10. Contractor shall provide required hard piping, valves, and supports to conduct bypass operation as shown in plans and per specification 01652. Vertical piping installed at the manhole must be hard piping such as HDPE. Horizontal piping may be hard piping or hoses. All piping must have restrained joints.
11. Temporary piping shall be secured to the existing headworks structure.
12. Contractor shall provide road ramps rated for chemical delivery/sludge hauling trucks for all bypass piping and exposed conduits crossing existing concrete access road.
13. Contractor shall remove and store existing grating at the Headworks as needed to conduct bypass operations. Grating shall be reinstalled once bypass operations are complete.
14. Bypass discharge piping shall sweep in smooth and provide smooth discharge flow into the receiving waters. Discharge flows shall not splash or drop into receiving waters.
15. In the event of a storm event or in the event the peak shaving basin pump station, dumpster pad, or headworks channels need to be drained, the contractor shall install sump pumps and redirect flow to the front of the headworks.
16. Contractor shall provide a portable restroom and hand washing station for the duration of the lift station bypass.

NO.	DATE	REVISIONS	APP.

WILBARGER CREEK M.U.D. No. 2
TRAVIS COUNTY, TEXAS

WASTEWATER TREATMENT PLANT
EXPANSION TO 1.5 MGD

LIFT STATION BYPASS PLAN – SHEET 2 OF 2

QUIDDITY
Texas Board of Professional Engineers and Land Surveyors Reg. No. F-23290
912 South Capital of Texas Hwy, Suite 300 • Austin, TX 78746 • 512.441.9493

SCALE: 1/8"=1'	DGN. BY: ZCOOPER
DATE: FEBRUARY 2026	DWN. BY: MKLENKE
JOB NO. 0A651-0021-02	DWG. NO.
SUBMITTED:	SURV. BY:
	F.B. NO.

STATE OF TEXAS
ZACHARY A. COOPER
156249
LICENSED PROFESSIONAL ENGINEER
3/10/26

2-M-2
SHEET NO. 54 OF 230

C:\Users\JAS\DC\ACCDocs\Quiddity\0A651-0021-02 _ WILBARGER WWTP EXP. 1.5 MGD\Project Files\PLANS\MECH.dwg, Feb 12, 2026 - 5:25pm, JAS

0 1 2 3 4 5 ORIGINAL SCALE IN INCHES FOR REDUCED PLANS

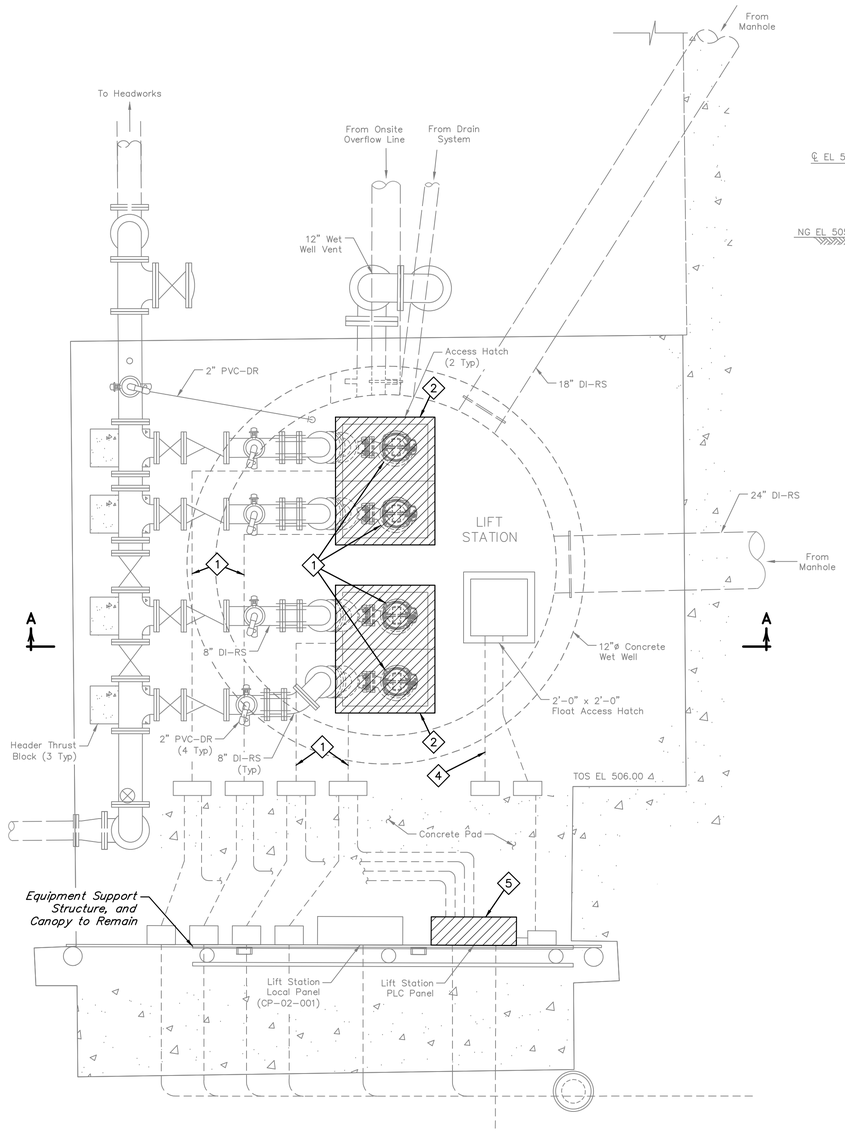

LIFT STATION DEMOLITION PLAN
SCALE: 3/8" = 1'-0"

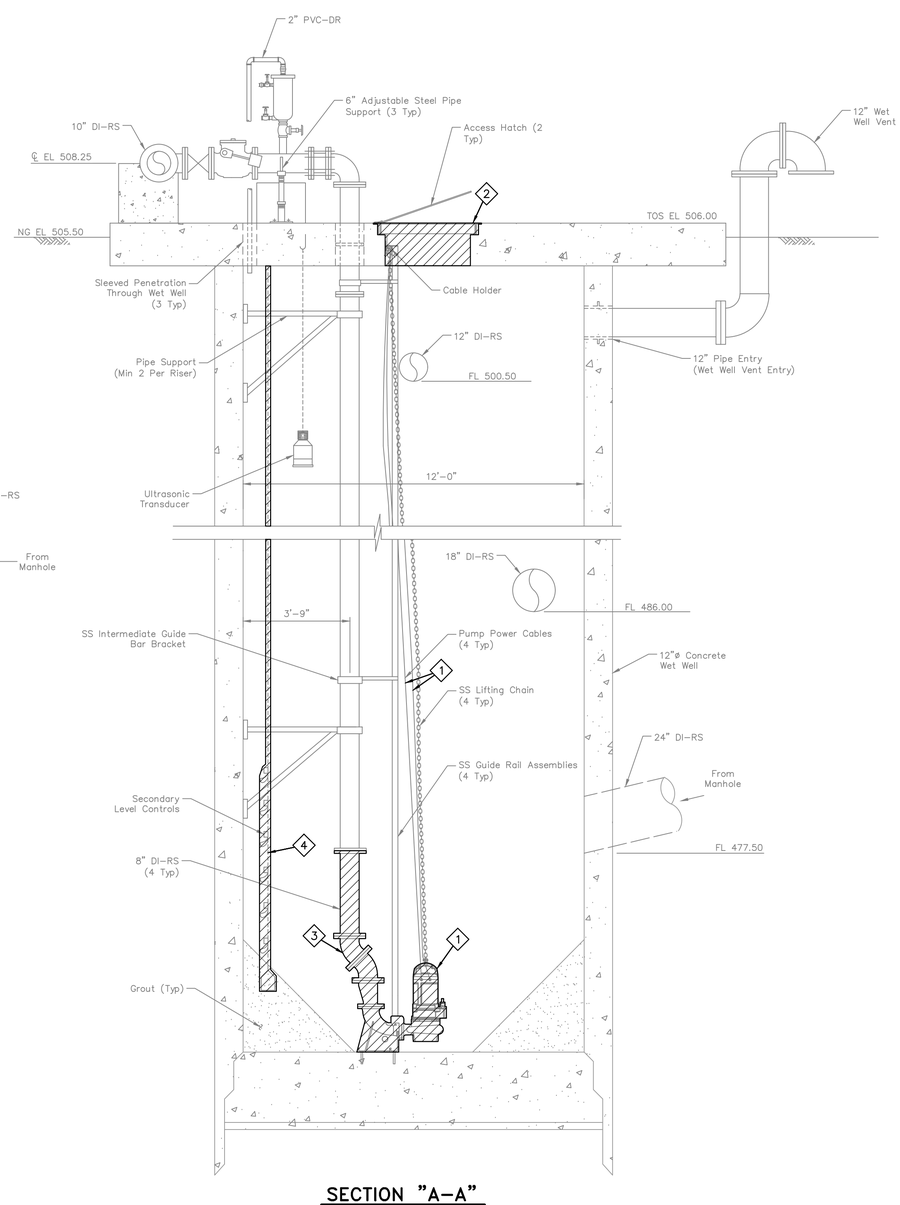

SECTION "A-A"
SCALE: 3/8" = 1'-0"

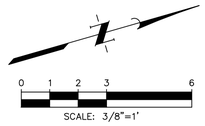

ITEMS OF WORK

No.	DESCRIPTION
1	Demolish four (4) existing submersible pumps, along with their associated power conductors and control wiring running to the existing terminal boxes. Existing conduits shall remain in place. Contractor to follow manufacturer instructions during construction.
2	Demolish two (2) existing 48"x36" lift station double-door hatches. See Structural Sheets for concrete slab demolition and repair plans.
3	Demolish four (4) existing 6"x4" base elbows and associated piping as shown.
4	Demolish existing floats and instrumentation wiring running to existing Lift Station Local Panel. Existing Conduits shall remain in place.
5	Demolish existing Lift Station PLC Panel.

NOTES:

1. Contractor shall field locate and verify flowline elevations and material of all existing piping, pumps and notify engineer of all findings prior to commencing work, at no additional cost to the owner.

LEGEND:

TO BE DEMOLISHED AND REPLACED

NO.	DATE	REVISIONS	APP.

WILBARGER CREEK M.U.D. No. 2
TRAVIS COUNTY, TEXAS

WASTEWATER TREATMENT PLANT EXPANSION TO 1.5 MGD

LIFT STATION DEMOLITION PLAN & SECTION

QUIDDITY
Texas Board of Professional Engineers and Land Surveyors Reg. No. F-23290
912 South Capital of Texas Hwy, Suite 300 • Austin, TX 78746 • 512.441.9493

SCALE: 3/8"=1'-0"	DGN. BY: ZCOOPER
DATE: FEBRUARY 2026	DWN. BY: MKLENKE
JOB NO. 0A651-0021-02	DWG. NO.
SUBMITTED:	SURV. BY:
	F.B. NO.

STATE OF TEXAS
ZACHARY A. COOPER
156249
LICENSED PROFESSIONAL ENGINEER
3/10/26

2-M-3
SHEET NO. 55 OF 230

C:\Users\JAS\DC\ACCDocs\Quiddity\0A651-0021-02 _ WILBARGER WWTP EXP. 1.5 MGD\Project Files\PLANS\MECH.dwg, Feb 12, 2026 - 5:25pm, JAS

0 1 2 3 4 5 ORIGINAL SCALE IN INCHES FOR REDUCED PLANS

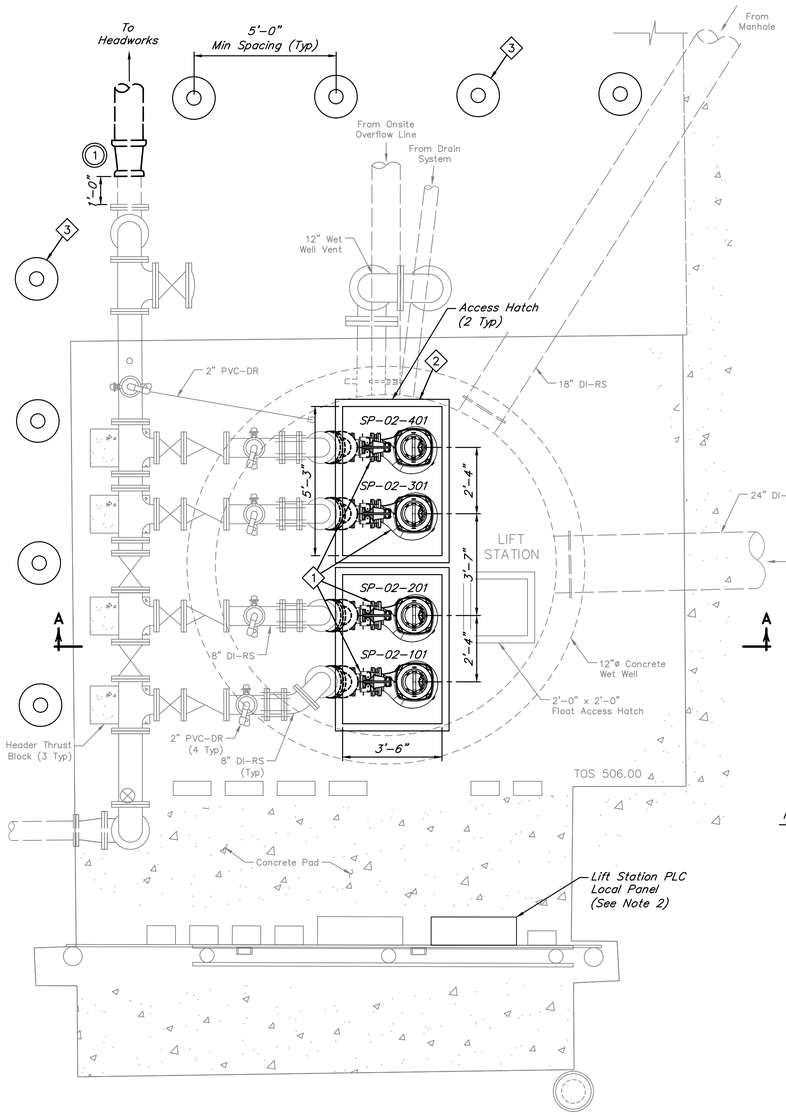

LIFT STATION IMPROVEMENTS PLAN

SCALE: 3/8" = 1'-0"

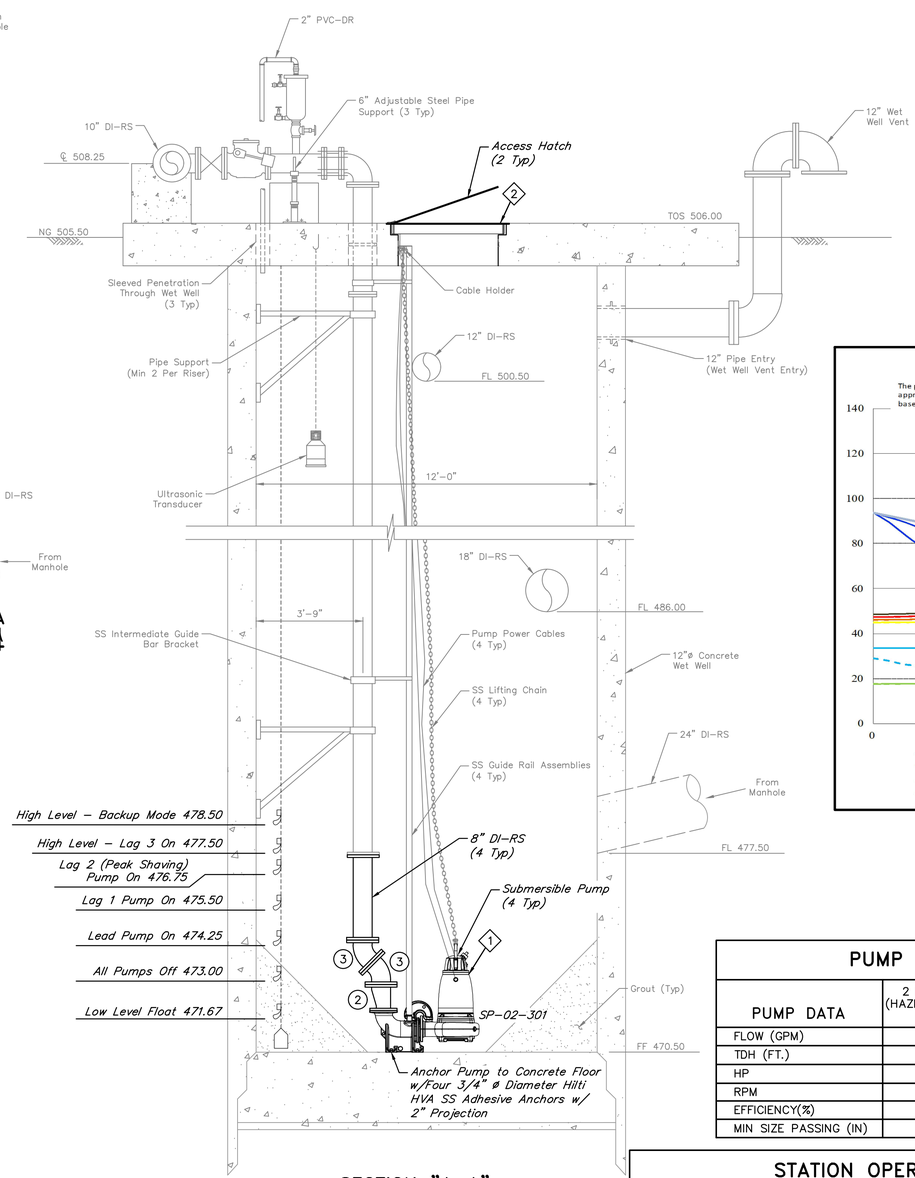

SECTION "A-A"

SCALE: 3/8" = 1'-0"

0 1 2 3 6

SCALE: 3/8"=1'

NOTES:

1. Contractor shall field locate and verify flowline elevations and material of all existing piping, pumps and notify engineer of all findings prior to commencing work, at no additional cost to the owner.
2. Reference Electrical Sheets for details concerning the proposed lift station PLC local panel.

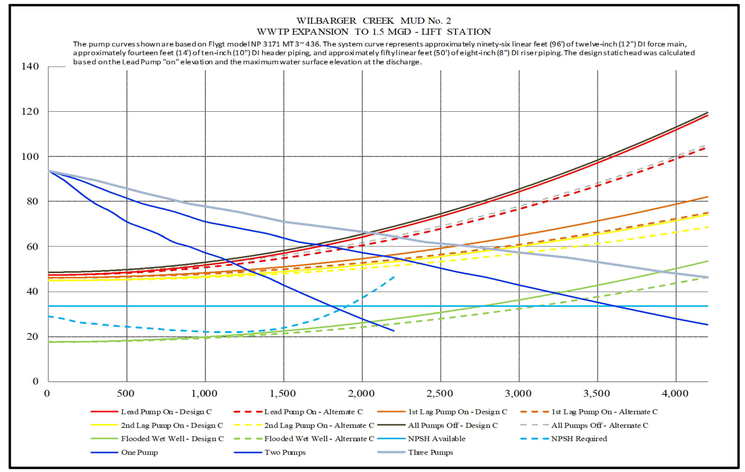

PUMP DATA (DESIGN)

PUMP DATA	2 PUMP OPERATING (HAZEN WILLIAMS C=100)	2 PUMP OPERATING (HAZEN WILLIAMS C=140)
FLOW (GPM)	2083	2200
TDH (FT.)	56.41	54.69
HP	25	25
RPM	1770	1770
EFFICIENCY(%)	75.96	76.81
MIN SIZE PASSING (IN)	3	3

VALVES, FITTINGS, AND ACCESSORIES SCHEDULE

No.	DESCRIPTION
1	10"x12" Reducer, MJ
2	6"x8" Eccentric Reducer, FJ
3	8" 45° Bend, FJ

◎ Indicates Restrained Valve or Fitting.

ITEMS OF WORK

No.	DESCRIPTION
1	Install four (4) submersible pumps with new base elbows and piping/fittings as required for connection to the existing wet well riser piping. Existing SS Guide Rail Assemblies shall be reused with new upper guide rail brackets installed. Contractor to follow manufacturer instructions during construction.
2	Install two (2) 5'-3" x 3'-6" hatches. See Structural Sheets for detail on hatch installation and concrete slab demolition and repair plans. Touch-up coat the concrete as necessary due to demolition/hatch replacement.
3	Install eight (8) Removable Bollards. See Sheet 0-C-37 for details.

STATION OPERATION TABLE (DESIGN)

RISING LEVEL CYCLE

WATER LEVEL ELEVATION	ACTION	PUMP(S) IN OPERATION
473.00	PUMPS OFF LEVEL – NO ACTION	ALL PUMPS OFF
474.25	LEAD PUMP TURNS ON	LEAD PUMP ON
475.50	LAG 1 PUMP ON	LEAD & LAG 1 PUMP ON
476.75	LAG 2 (PEAK SHAVING) PUMP ON	LEAD, LAG 1 & LAG 2 PUMP ON
477.50	HIGH LEVEL – LAG 3 (COMMON SPARE) PUMP ON	LEAD, LAG 1, LAG 2 & LAG 3 PUMP ON

FALLING LEVEL CYCLE

WATER LEVEL ELEVATION	ACTION	PUMP(S) IN OPERATION
476.75	LAG 3 PUMP TURNS OFF	LEAD, LAG 1, & LAG 2
475.50	LAG 2 PUMP TURNS OFF	LEAD & LAG 1
474.25	LAG 1 PUMP TURNS OFF	LEAD
473.00	ALL PUMPS TURN OFF	ALL PUMPS OFF

NO.	DATE	REVISIONS	APP.

WILBARGER CREEK M.U.D. No. 2
TRAVIS COUNTY, TEXAS

WASTEWATER TREATMENT PLANT EXPANSION TO 1.5 MGD

LIFT STATION IMPROVEMENTS PLAN & SECTION

QUIDDITY
Texas Board of Professional Engineers and Land Surveyors Reg. No. F-23290
912 South Capital of Texas Hwy, Suite 300 • Austin, TX 78746 • 512.441.9493

SCALE: 3/8"=1'-0" DGN. BY: ZCOOPER
DATE: FEBRUARY 2026 DWN. BY: MKLENKE
JOB NO. 0A651-0021-02 DWG. NO.
SUBMITTED: SURV. BY:
F.B. NO.

STATE OF TEXAS
ZACHARY A. COOPER
156249
LICENSED PROFESSIONAL ENGINEER
3/10/26

2-M-4
SHEET NO. 56 OF 230

C:\Users\JAS\DC\ACCDocs\Quiddity\0A651-0021-02 _ WILBARGER WWTP EXP. 1.5 MGD\Project Files\PLANS\MECH.dwg, Feb 12, 2026 – 5:25pm, JAS

0 1 2 3 4 5

ORIGINAL SCALE IN INCHES FOR REDUCED PLANS

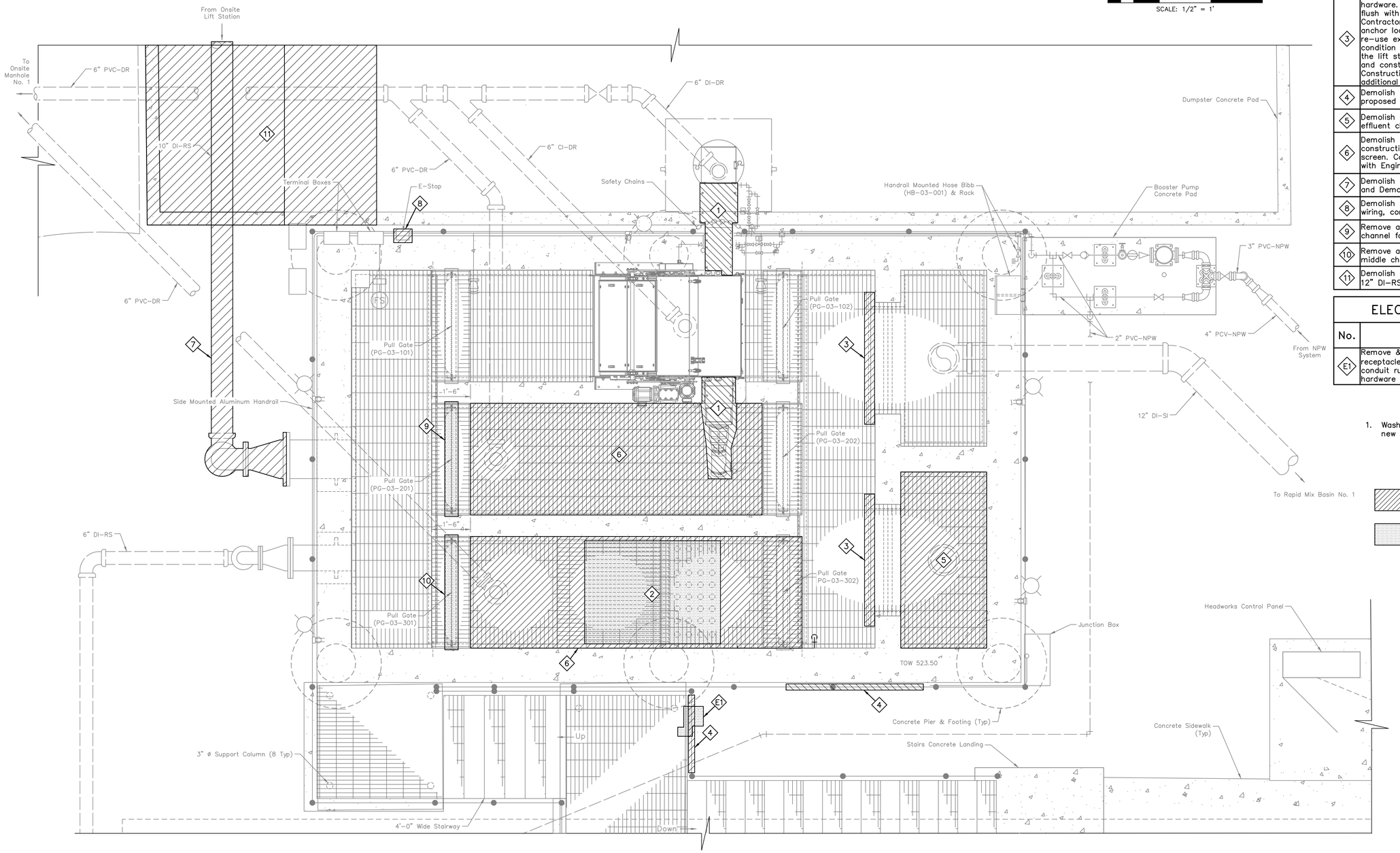

0 .5 1 2 4 6

SCALE: 1/2" = 1'

ITEMS OF WORK

No.	DESCRIPTION
1	Demolish the existing washer compactor, including supports, valves and all associated hardware.
2	Remove & relocate the existing manual bar screen and drip rack, including supports and all associated hardware.
3	Demolish the existing weir plates and all associated hardware. Cut and grind any remaining anchors to be flush with concrete and coat with 100% solids epoxy. Contractor shall verify existing and proposed weir plate anchor locations do not cause conflict. Contractor may re-use existing anchors if they are found to be in good condition and approved by Engineer. Bypass operations for the lift station shall not be conducted during demolition and construction for the headworks weir split. See Construction Sequencing Notes on the General Sheets for additional details.
4	Demolish existing handrail as required to connect proposed stairs.
5	Demolish existing 3" NS grout and bank sand from effluent channel.
6	Demolish and/or re-use existing grating as needed for construction and installation of manual and mechanical screen. Contractor to coordinate construction of grating with Engineer.
7	Demolish existing 10-inch DI-RS line. See Existing Site and Demolition Plan on Sheet 0-C-3.
8	Demolish existing remote push stop and any associated wiring, conduit, hardware and accessories.
9	Remove and relocate existing Pull Gate (PG-03-201) to channel for proposed mechanical screen.
10	Remove and relocate existing Pull Gate (PG-03-301) to middle channel.
11	Demolish existing concrete dumpster pad and curb for 12" DI-RS.

ELECTRICAL ITEMS OF WORK

No.	DESCRIPTION
E1	Remove & relocate existing light fixture, light pole and receptacle (See Electrical Sheets). Contractor to demolish conduit run and provide new stainless steel mounting hardware as required.

NOTES:

1. Washer Compactor shall not be demolished until new screens and washer compactor are on-site.

LEGEND:

TO BE DEMOLISHED AND REMOVED

TO BE REMOVED AND RELOCATED

NO.	DATE	REVISIONS	APP.

WILBARGER CREEK M.U.D. No. 2
TRAVIS COUNTY, TEXAS

WASTEWATER TREATMENT PLANT EXPANSION TO 1.5 MGD

ELEVATED HEADWORKS DEMOLITION PLAN

QUIDDITY
Texas Board of Professional Engineers and Land Surveyors Reg. No. F-23290
912 South Capital of Texas Hwy, Suite 300 • Austin, TX 78746 • 512.441.9493

SCALE:	1/2"=1'-0"	DGN. BY:	ABM
DATE:	FEBRUARY 2026	DWN. BY:	MKLENKE
JOB NO.	0A651-0021-02	DWG. NO.	
SUBMITTED:		SURV. BY:	
		F.B. NO.	

STATE OF TEXAS
JORDAN ZYLBERBERG
142350
LICENSED PROFESSIONAL ENGINEER
3/10/26

3-M-1
SHEET NO. 57 OF 230

C:\Users\JAS\DC\ACCDocs\Quiddity\0A651-0021-02 _ WILBARGER WWTP EXP. 1.5 MGD\Project Files\PLANS\MECH.dwg, Feb 20, 2026 - 9:23am, JAS

0 1 2 3 4 5 ORIGINAL SCALE IN INCHES FOR REDUCED PLANS

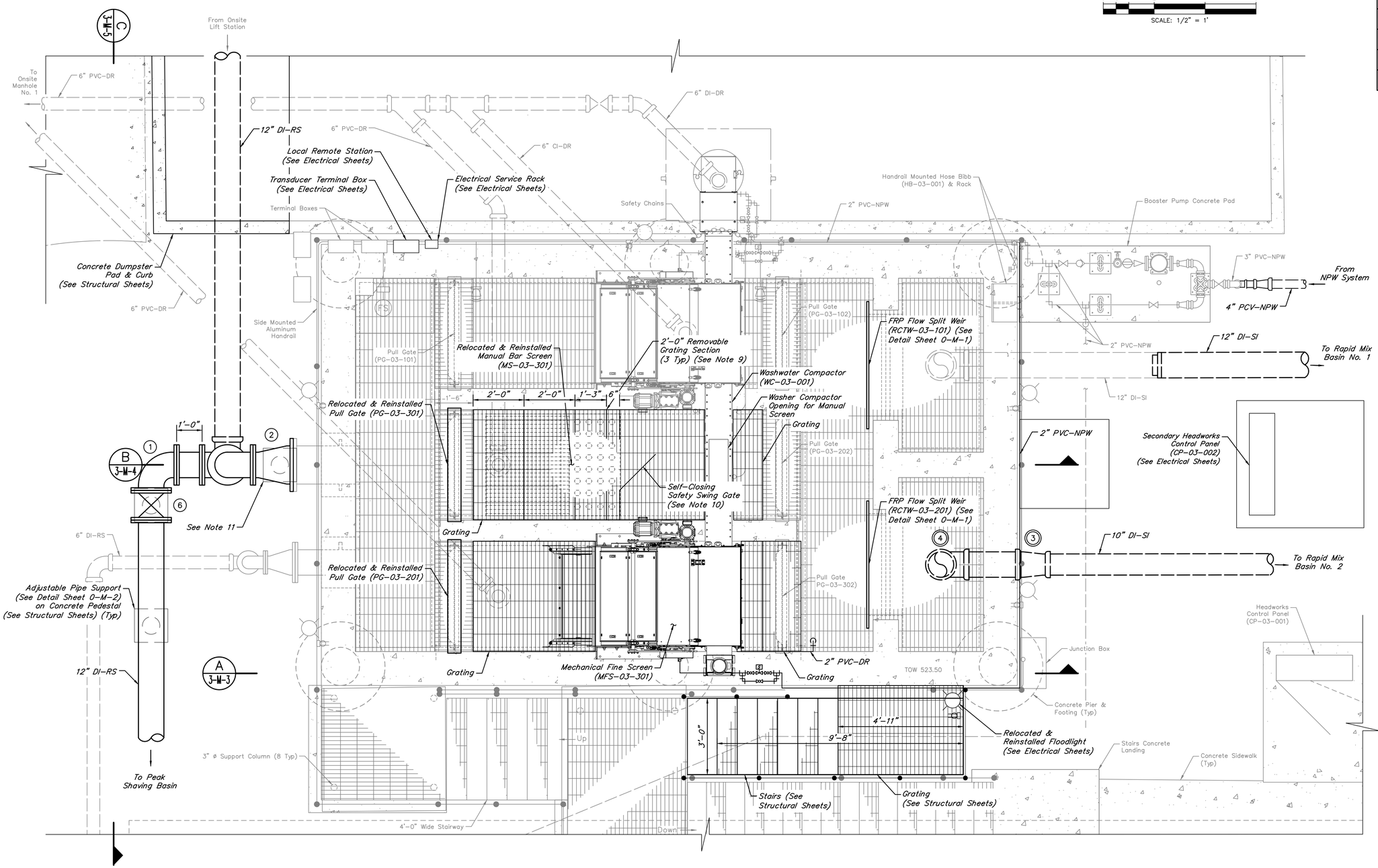

VALVES, FITTINGS AND ACCESSORIES SCHEDULE

No.	DESCRIPTION
1	12" 90° Bend, FJ
2	18"x12" Concentric Reducer, FJ
3	12"x10" Concentric Reducer, MJ
4	12" 90° Bend, MJ
5	12" Plug Valve (PV-03-005)

◎ Indicates Restrained Valve or Fitting.

NOTES:

1. Pipes with diameter less than 3" do not have all valves & fittings shown and are not labeled with valve & accessories schedule. Refer to P&ID's.
2. Contractor shall re-use existing grating seats for proposed grating.
3. Contractor shall, at minimum, have one screen in service at all times.
4. Insulate all above ground PVC piping in accordance with Specification Section 15226.
5. Mount all small diameter piping to walls with stainless steel unistrut & stainless steel hardware. The maximum distance between supports shall be 4'-0".
6. Contractor to ensure washer compactor drains back to the headworks.
7. Grating shall be placed below conveyor.
8. Contractor shall construct new washer compactor utilizing the existing discharge chute.
9. Install tabs on the embedded angle grating supports for the 2'-0" removable grating sections.
10. Mounting Posts and anchor kits for safety swing gate shall be provided by the Manufacturer.
11. Contractor to install adjustable pipe support with concrete pedestal for the actuator for PV-03-005.

NO.	DATE	REVISIONS	APP.

WILBARGER CREEK M.U.D. No. 2
TRAVIS COUNTY, TEXAS

WASTEWATER TREATMENT PLANT EXPANSION TO 1.5 MGD

ELEVATED HEADWORKS PLAN

QUIDDITY
Texas Board of Professional Engineers and Land Surveyors Reg. No. F-23290
912 South Capital of Texas Hwy, Suite 300 • Austin, TX 78746 • 512.441.9493

SCALE: 1/2"=1'-0"	DGN. BY: ABM
DATE: JUNE 2026	DWN. BY: MKLENKE
JOB NO. 0A651-0021-02	DWG. NO.
SUBMITTED:	SURV. BY:
	F.B. NO.

STATE OF TEXAS
JORDAN ZYLBERBERG
142350
LICENSED PROFESSIONAL ENGINEER
7/2/26

3-M-2
SHEET NO. 59 OF 230

C:\Users\JAS\DC\ACCDocs\Quiddity\0A651-0021-02 _ WILBARGER WWTP EXP. 1.5 MGD\Project Files\PLANS\MECH.dwg, Jun 26, 2026 - 9:10am, JAS

0 1 2 3 4 5 ORIGINAL SCALE IN INCHES FOR REDUCED PLANS

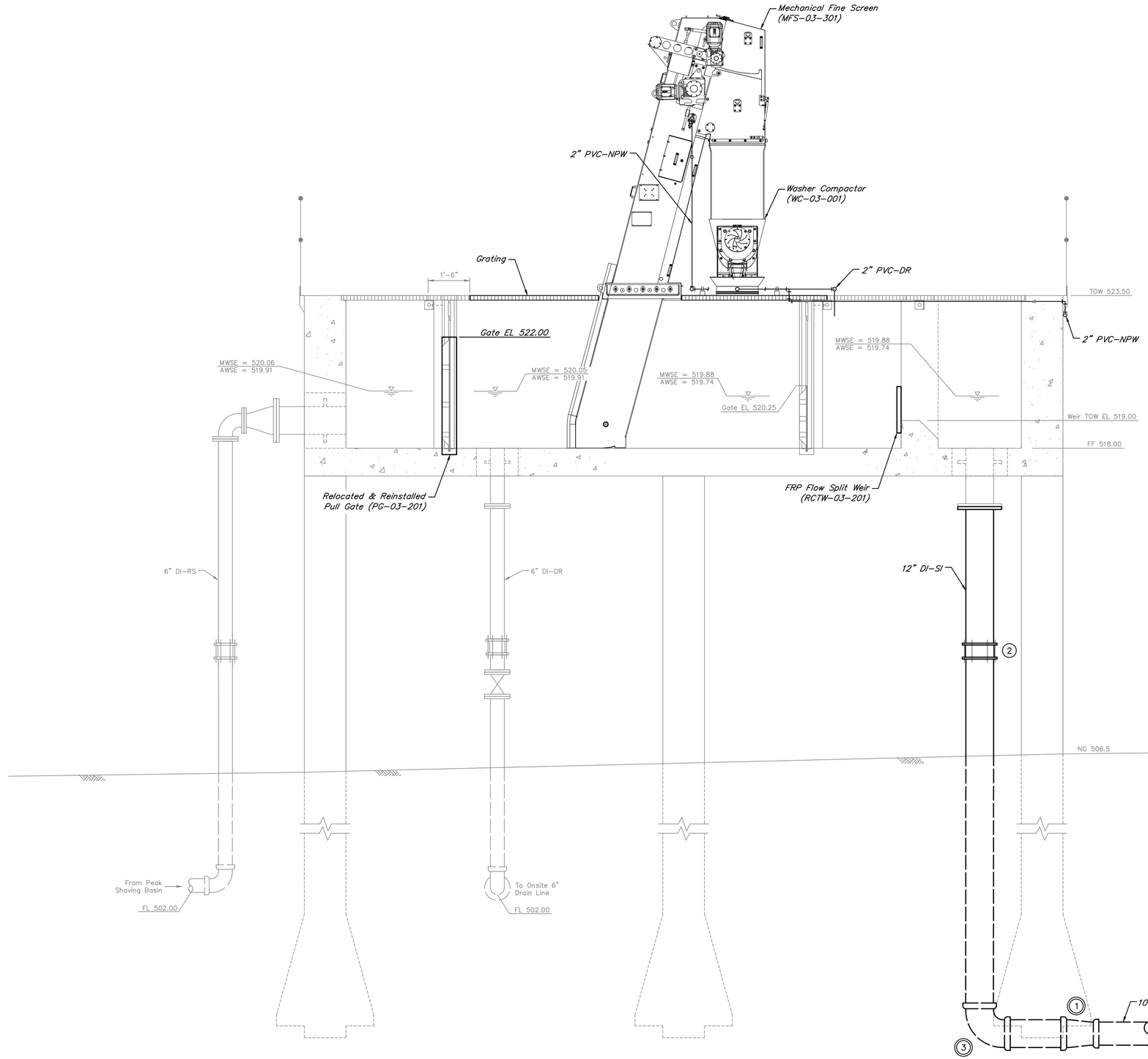

A 3-M-2 ELEVATED HEADWORKS SECTION
SCALE: 1/2"=1'-0"

0 .5 1 2 4 6
SCALE: 1/2" = 1'

VALVES, FITTINGS, AND ACCESSORIES SCHEDULE	
No.	DESCRIPTION
1	12"x10" Concentric Reducer, PO
2	12" Expansion Coupling
3	12" 90° Bend, MJ

◯ Indicates Restrained Valve or Fitting.

NOTES:

1. Pipes with diameter less than 3" do not have all valves & fittings shown and are not labeled with valve & accessories schedule. Refer to P&ID's.
2. Contractor shall re-use existing grating seats for proposed grating.
3. Contractor shall, at minimum, have one screen in service at all times.
4. Insulate all above ground PVC piping in accordance with Specification Section 15226.
5. Mount all small diameter piping to walls with stainless steel unistrut & stainless steel hardware. The maximum distance between supports shall be 4'-0".
6. Contractor to ensure washer compactor drains back to the headworks.
7. Grating shall be placed below conveyor.
8. Contractor shall construct new washer compactor utilizing the existing discharge chute.
9. Install tabs on the embedded angle grating supports for the 2'-0" removable grating sections.

NO.	DATE	REVISIONS	APP.

WILBARGER CREEK M.U.D. No. 2
TRAVIS COUNTY, TEXAS

WASTEWATER TREATMENT PLANT EXPANSION TO 1.5 MGD

ELEVATED HEADWORKS SECTIONS - SHEET 1 OF 3

QUIDDITY
Texas Board of Professional Engineers and Land Surveyors Reg. No. F-23290
912 South Capital of Texas Hwy, Suite 300 • Austin, TX 78746 • 512.441.9493

SCALE:	1/2"=1'-0"	DGN. BY:	ABM
DATE:	MARCH 2026	DWN. BY:	MKLENKE
JOB NO.	0A651-0021-02	DWG. NO.	
SUBMITTED:		SURV. BY:	
		F.B. NO.	

STATE OF TEXAS
JORDAN ZYLBERBERG
142350
LICENSED PROFESSIONAL ENGINEER
3/10/26

3-M-3
SHEET NO. 59 OF 230

C:\Users\inoldin\DC\ACCDocs\Quiddity – Water-\0A651-0021-02 _ WILBARGER WWTP EXP. 1.5 MGD\Project Files\PLANS\MECH.dwg, Mar 09, 2026 – 1:13pm, inoldin

0 1 2 3 4 5 ORIGINAL SCALE IN INCHES FOR REDUCED PLANS

0 .5 1 2 4 6
SCALE: 1/2" = 1'

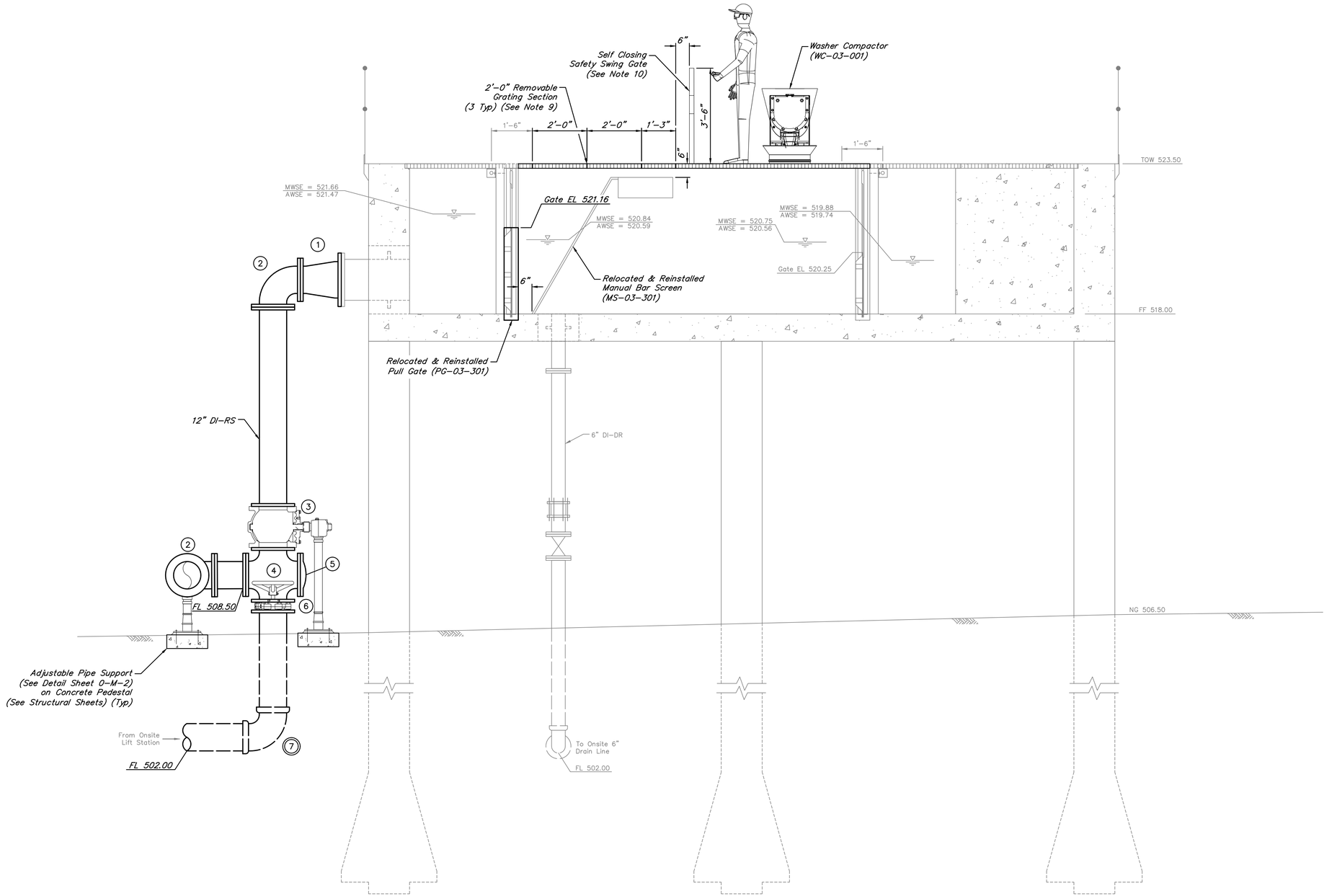

B / 3-M-2 ELEVATED HEADWORKS SECTION
SCALE: 1/2"=1'-0"

VALVES, FITTINGS, AND ACCESSORIES SCHEDULE

No.	DESCRIPTION
1	12"x18" Concentric Reducer, FJ
2	12" 90° Bend, FJ
3	12" Plug Valve (PV-03-006)
4	12"x12" Cross, FJ
5	12" Blind Flange (BF-03-001)
6	12" Knife Gate Valve (KGV-03-001)
7	12" 90° Bend, MJ

◎ Indicates Restrained Valve or Fitting.

NOTES:

1. Pipes with diameter less than 3" do not have all valves & fittings shown and are not labeled with valve & accessories schedule. Refer to P&ID's.
2. Contractor shall re-use existing grating seats for proposed grating.
3. Contractor shall, at minimum, have one screen in service at all times.
4. Insulate all above ground PVC piping in accordance with Specification Section 15226.
5. Mount all small diameter piping to walls with stainless steel unistrut & stainless steel hardware. The maximum distance between supports shall be 4'-0".
6. Contractor to ensure washer compactor drains back to the headworks.
7. Grating shall be placed below conveyor.
8. Contractor shall construct new washer compactor utilizing the existing discharge chute.
9. Install tabs on the embedded angle grating supports for the 2'-0" removable grating sections.
10. Mounting Posts and anchor kits for safety swing gate shall be provided by the Manufacturer.

NO.	DATE	REVISIONS	APP.

WILBARGER CREEK M.U.D. No. 2
TRAVIS COUNTY, TEXAS

WASTEWATER TREATMENT PLANT EXPANSION TO 1.5 MGD

ELEVATED HEADWORKS SECTIONS – SHEET 2 OF 3

QUIDDITY
Texas Board of Professional Engineers and Land Surveyors Reg. No. F-23290
912 South Capital of Texas Hwy, Suite 300 ★ Austin, TX 78746 ★ 512.441.9493

SCALE:	1/2"=1'-0"	DGN. BY:	ABM
DATE:	JUNE 2026	DWN. BY:	MKLENKE
JOB NO.	0A651-0021-02	DWG. NO.	
SUBMITTED:		SURV. BY:	
		F.B. NO.	

STATE OF TEXAS ★ JORDAN ZYLBERBERG 142350 LICENSED PROFESSIONAL ENGINEER
7/2/26

3-M-4
SHEET NO. 61 OF 230

C:\Users\JAS\DC\ACCDocs\Quiddity\0A651-0021-02 _ WILBARGER WWTP EXP. 1.5 MGD\Project Files\PLANS\MECH.dwg, Jun 26, 2026 - 9:33am, JAS

0 1 2 3 4 5 ORIGINAL SCALE IN INCHES FOR REDUCED PLANS

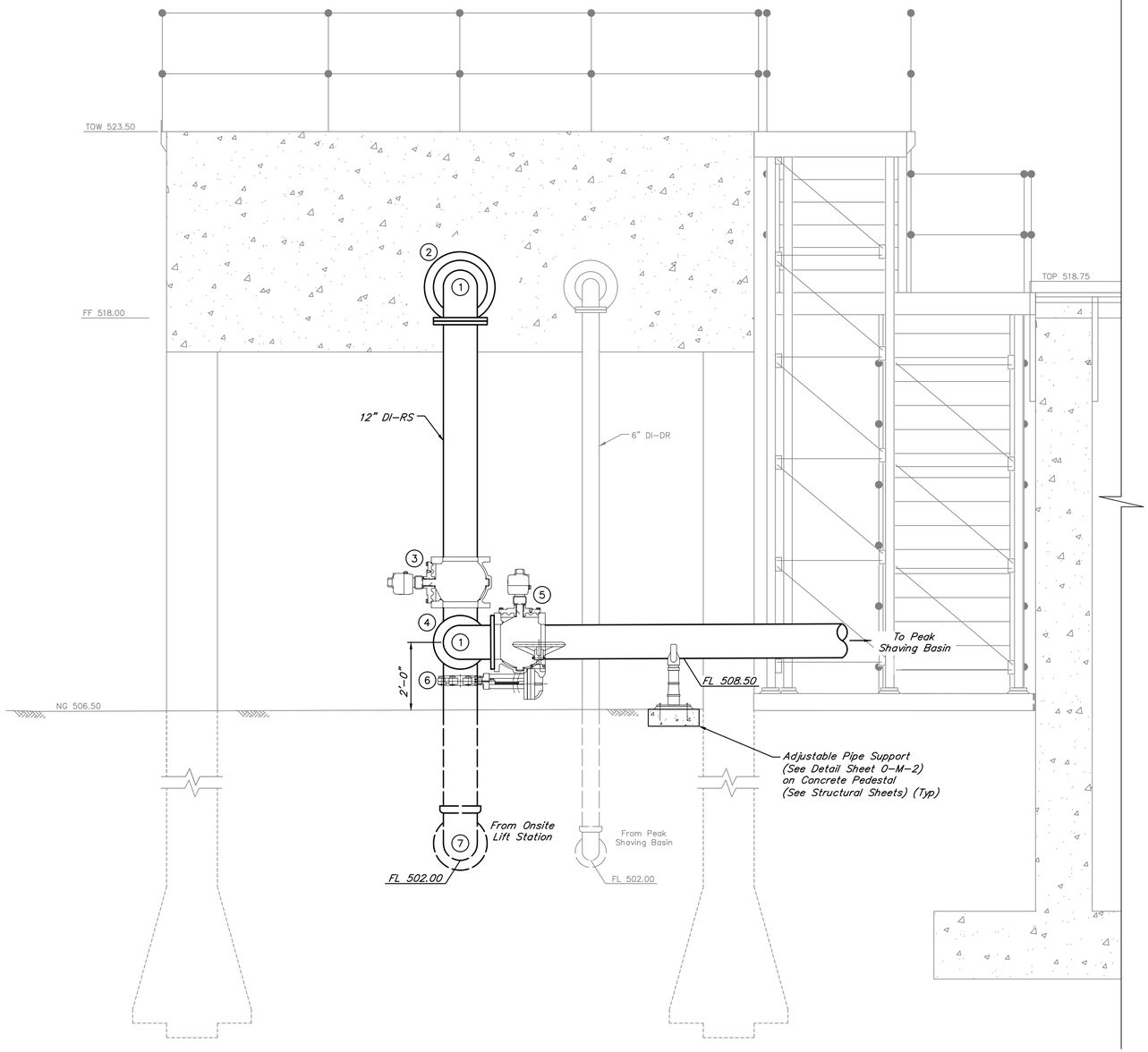

C 3-M-2 ELEVATED HEADWORKS SECTION

SCALE: 1/2"=1'-0"

0 .5 1 2 4 6

SCALE: 1/2" = 1'

VALVES, FITTINGS, AND ACCESSORIES SCHEDULE

No.	DESCRIPTION
1	12" 90° Bend, FJ
2	18"x12" Concentric Reducer, FJ
3	12" Plug Valve (PV-03-006)
4	12"x12" Cross, FJ
5	12" Plug Valve, (PV-03-005)
6	12" Knife Valve (KGV-03-001)
7	12" 90° Bend, MJ

◎ Indicates Restrained Valve or Fitting.

NOTES:

1. Pipes with diameter less than 3" do not have all valves & fittings shown and are not labeled with valve & accessories schedule. Refer to P&ID's.
2. Contractor shall re-use existing grating seats for proposed grating.
3. Contractor shall, at minimum, have one screen in service at all times.
4. Insulate all above ground PVC piping in accordance with Specification Section 15226.
5. Mount all small diameter piping to walls with stainless steel unistrut & stainless steel hardware. The maximum distance between supports shall be 4'-0".
6. Contractor to ensure washer compactor drains back to the headworks.
7. Grating shall be placed below conveyor.
8. Contractor shall construct new washer compactor utilizing the existing discharge chute.
9. Install tabs on the embedded angle grating supports for the 2'-0" removable grating sections.

NO.	DATE	REVISIONS	APP.

WILBARGER CREEK M.U.D. No. 2
TRAVIS COUNTY, TEXAS

WASTEWATER TREATMENT PLANT EXPANSION TO 1.5 MGD

ELEVATED HEADWORKS SECTIONS - SHEET 3 OF 3

QUIDDITY
Texas Board of Professional Engineers and Land Surveyors Reg. No. F-23290
912 South Capital of Texas Hwy, Suite 300 • Austin, TX 78746 • 512.441.9493

SCALE: 1/2"=1'-0" DGN. BY: ABM
DATE: MARCH 2026 DWN. BY: MKLENKE
JOB NO. 0A651-0021-02 DWG. NO.
SUBMITTED: SURV. BY:
F.B. NO.

STATE OF TEXAS
JORDAN ZYLBERBERG
142350
LICENSED PROFESSIONAL ENGINEER
3/10/26

3-M-5
SHEET NO. 61 OF 230

C:\Users\inoldin\DC\ACCDocs\Quiddity – Water-\0A651-0021-02 _ WILBARGER WWTP EXP. 1.5 MGD\Project Files\PLANS\MECH.dwg, Mar 09, 2026 – 1:26pm, inoldin

0 1 2 3 4 5 ORIGINAL SCALE IN INCHES FOR REDUCED PLANS

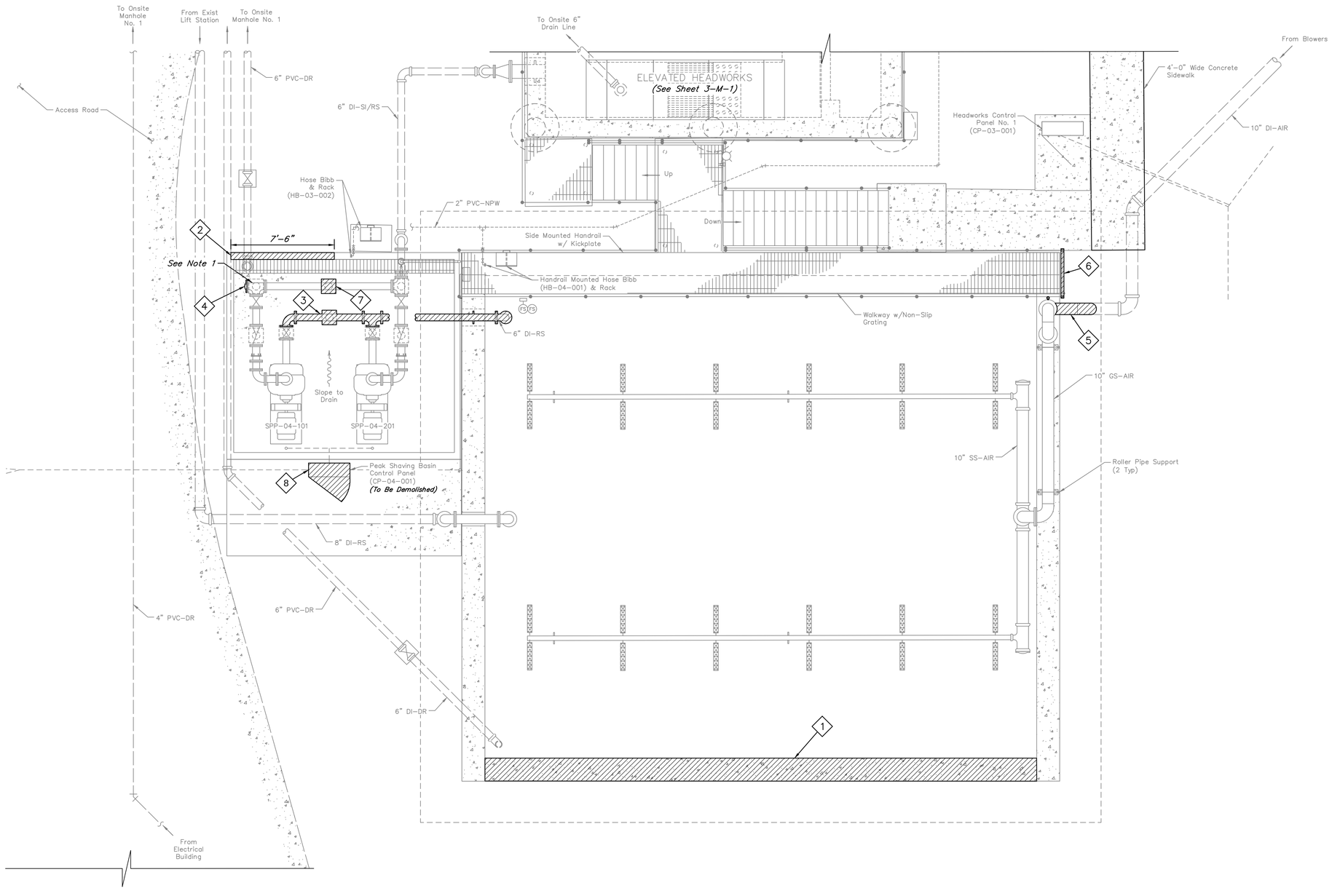

0 1 2 4 8 12
SCALE: 1/4" = 1'

ITEMS OF WORK

No.	DESCRIPTION
1	Demolish existing western Peak Shaving Basin wall (See Structural Sheets). The wall shall not be demolished until work on the basin expansion is complete, including concrete leak testing.
2	Demolish existing 6" concrete curb (See Structural Sheets).
3	Demolish existing 6" DI-RS including all fittings and supports. Grout fill the wall pipe penetration.
4	Demolish existing 6" blind flange.
5	Demolish existing 10" GS-AIR as required to install proposed 10" GS-AIR and fittings.
6	Demolish existing handrail as required to tie into the proposed handrail (See Structural Sheets).
7	Relocate existing pipe support.

ELECTRICAL ITEMS OF WORK

No.	DESCRIPTION
8	Demolish existing Peak Shaving Basin control panel. Proposed contol panel to be installed in the same location as the existing control panel. The proposed control panel will reuse the existing conductors and aboveground conduit.

LEGEND:

TO BE DEMOLISHED

NOTES:

1. Exist 6"x6" Tee to be rotated 90° counterclockwise (See Sheet 4-M-2).

NO.	DATE	REVISIONS	APP.

WILBARGER CREEK M.U.D. No. 2
TRAVIS COUNTY, TEXAS

WASTEWATER TREATMENT PLANT EXPANSION TO 1.5 MGD

PEAK SHAVING BASIN DEMOLITION PLAN

QUIDDITY
Texas Board of Professional Engineers and Land Surveyors Reg. No. F-23290
912 South Capital of Texas Hwy, Suite 300 • Austin, TX 78746 • 512.441.9493

SCALE:	1/4" = 1'-0"	DGN. BY:	ZKELL
DATE:	JUNE 2026	DWN. BY:	JSTRUHAR
JOB NO.	0A651-0021-02	DWG. NO.	
SUBMITTED:		SURV. BY:	
		F.B. NO.	

For Electrical Items Only:

STATE OF TEXAS
BAO LE THIEN TRAN
149385
LICENSED PROFESSIONAL ENGINEER
07/02/2026

STATE OF TEXAS
JORDAN ZYLBERBERG
142350
LICENSED PROFESSIONAL ENGINEER
7/2/26

4-M-1
SHEET NO. 63 OF 230

C:\Users\JAS\DC\ACCDocs\Quiddity\0A651-0021-02 _ WILBARGER WWTP EXP. 1.5 MGD\Project Files\PLANS\MECH-A4.dwg, Jun 26, 2026 - 11:29am, JAS

ORIGINAL SCALE IN INCHES FOR REDUCED PLANS

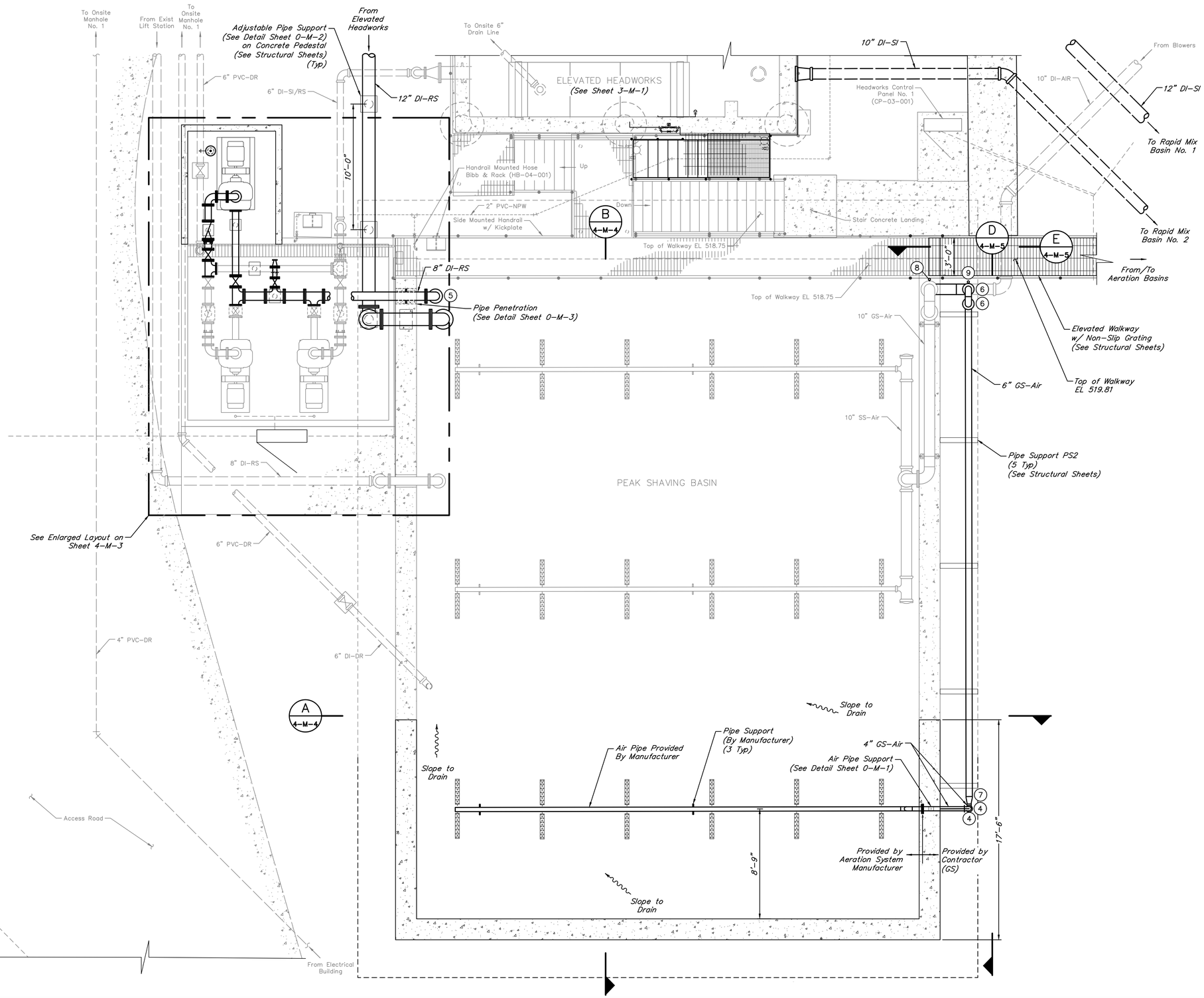

0 1 2 4 8 12

SCALE: 1/4" = 1'

VALVES, FITTINGS, AND ACCESSORIES SCHEDULE

No.	DESCRIPTION
1	10" Flanged Coupling Adapter
2	10"x10" Tee, FJ
3	10"x4" Eccentric Reducer, PE
4	4" 90° Bend, PE
5	8" 90° Bend, FJ
6	6" 90° Bend, FJ
7	6"x4" Reducer, PE
8	Pressure Gauge (PI-04001) w/ 1/2 " Ball Valve (BV-04-002)
10	Pressure Gauge (PI-04002) w/ 1/2 " Ball Valve (BV-04-003)

◎ Indicates Restrained Valve or Fitting

NOTES:

1. Aeration equipment is shown as for illustrative purposes only. See Specifications for performance requirements.
2. All locations, elevations, and dimensions shown are approximate and are based on record drawings. Contractor is responsible for verifying all locations, elevations, and dimensions necessary for the work.

NO.	DATE	REVISIONS	APP.

WILBARGER CREEK M.U.D. No. 2
TRAVIS COUNTY, TEXAS

WASTEWATER TREATMENT PLANT EXPANSION TO 1.5 MGD

PEAK SHAVING BASIN PLAN

QUIDDITY
Texas Board of Professional Engineers and Land Surveyors Reg. No. F-23290
912 South Capital of Texas Hwy, Suite 300 • Austin, TX 78746 • 512.441.9493

SCALE: 1/4" = 1'-0" DGN. BY: ZKELL
DATE: JUNE 2026 DWN. BY: JSTRUHAR
JOB NO. 0A651-0021-02 DWG. NO.
SUBMITTED: SURV. BY:
F.B. NO.

STATE OF TEXAS
JORDAN ZYLBERBERG
142350
LICENSED PROFESSIONAL ENGINEER
7/2/26

4-M-2
SHEET NO. 64 OF 230

C:\Users\JAS\DC\ACCDocs\Quiddity\0A651-0021-02 _ WILBARGER WWTP EXP. 1.5 MGD\Project Files\PLANS\MECH-A4.dwg, Jun 26, 2026 - 11:30am, JAS

0 1 2 3 4 5 ORIGINAL SCALE IN INCHES FOR REDUCED PLANS

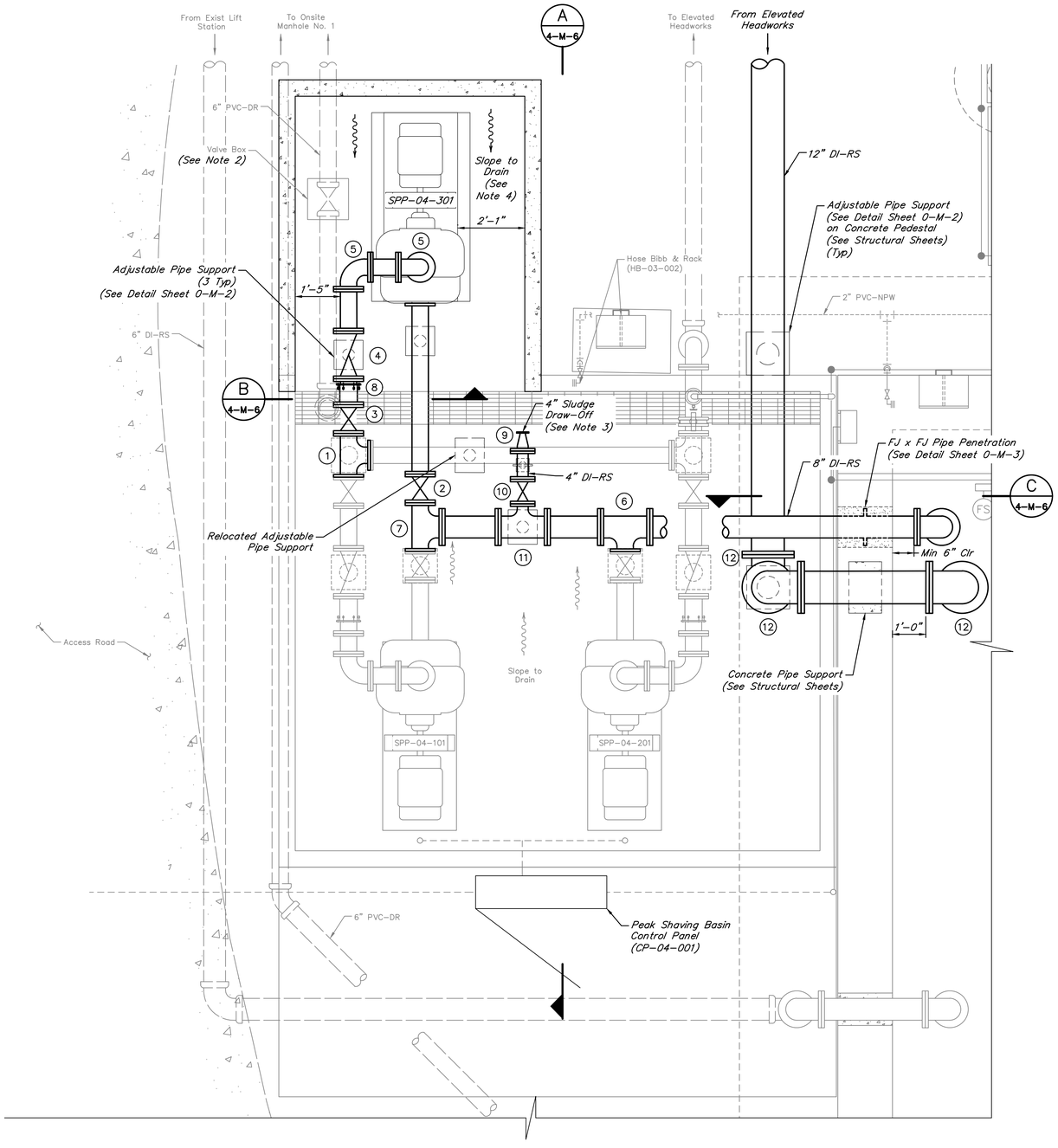

0 .5 1 2 4 6

SCALE: 1/2" = 1'

VALVES, FITTINGS, AND ACCESSORIES SCHEDULE

No.	DESCRIPTION
1	6"x6" Tee, FJ
2	6" Plug Valve (PV-04-301)
3	6" Plug Valve (PV-04-302)
4	6" Swing Check Valve (SCV-04-301)
5	6" 90° Bend, FJ
6	8"x6"x8" Tee, FJ
7	6"x8"x6" Tee, FJ
8	6" Dismantling Joint
9	4"x2" Male Cam & Groove Quick Coupling w/ Cover
10	4" Plug Valve (PV-04-003)
11	8"x4" Tee, FJ
12	12" 90° Bend, FJ

◎ Indicates Restrained Valve or Fitting

NOTES:

1. All locations, elevations, and dimensions shown are approximate and are based on record drawings. Contractor is responsible for verifying all locations, elevations, and dimensions necessary for the work.
2. Contractor to field adjust valve box and riser to be level with the proposed structure.
3. Contractor to field verify existing draw off quick connect at existing sludge holding tanks and match the proposed draw off quick connect at peak shaving basin.
4. Contractor to slope grout with a minimum slope of 1%.

NO.	DATE	REVISIONS	APP.

WILBARGER CREEK M.U.D. No. 2
TRAVIS COUNTY, TEXAS

WASTEWATER TREATMENT PLANT EXPANSION TO 1.5 MGD

PEAK SHAVING BASIN PUMP STATION PLAN

QUIDDITY
Texas Board of Professional Engineers and Land Surveyors Reg. No. F-23290
912 South Capital of Texas Hwy, Suite 300 • Austin, TX 78746 • 512.441.9493

SCALE: 1/2" = 1'-0" DGN. BY: ZKELL
DATE: JUNE 2026 DWN. BY: JSTRUHAR
JOB NO. 0A651-0021-02 DWG. NO.
SUBMITTED: SURV. BY:
F.B. NO.

STATE OF TEXAS
JORDAN ZYLBERBERG
142360
LICENSED PROFESSIONAL ENGINEER
7/2/26

4-M-3
SHEET NO. 65 OF 230

C:\Users\JAS\DC\ACCDocs\Quiddity\0A651-0021-02 _ WILBARGER WWTP EXP. 1.5 MGD\Project Files\PLANS\MECH-A4.dwg, Jun 26, 2026 - 11:31am, JAS

ORIGINAL SCALE IN INCHES FOR REDUCED PLANS

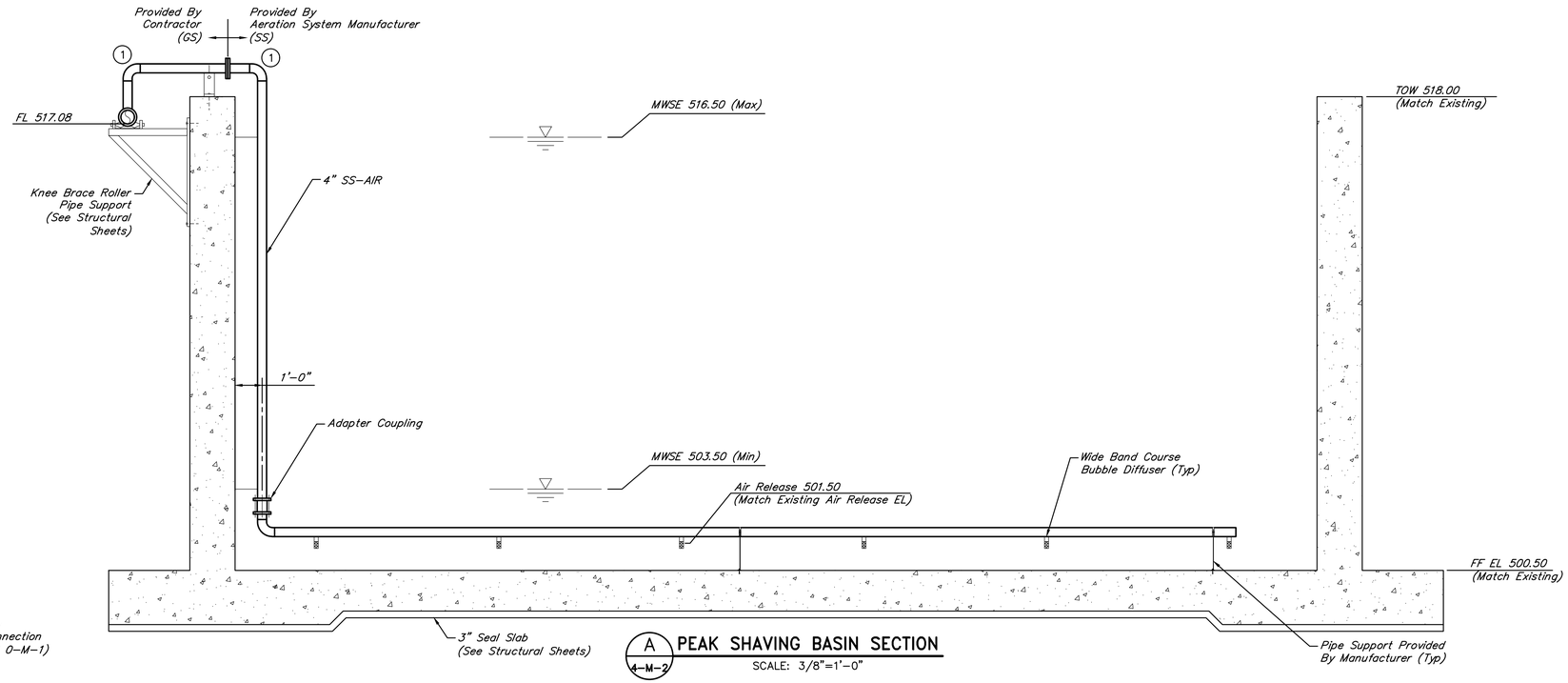

A 4-M-2 **PEAK SHAVING BASIN SECTION**
SCALE: 3/8"=1'-0"

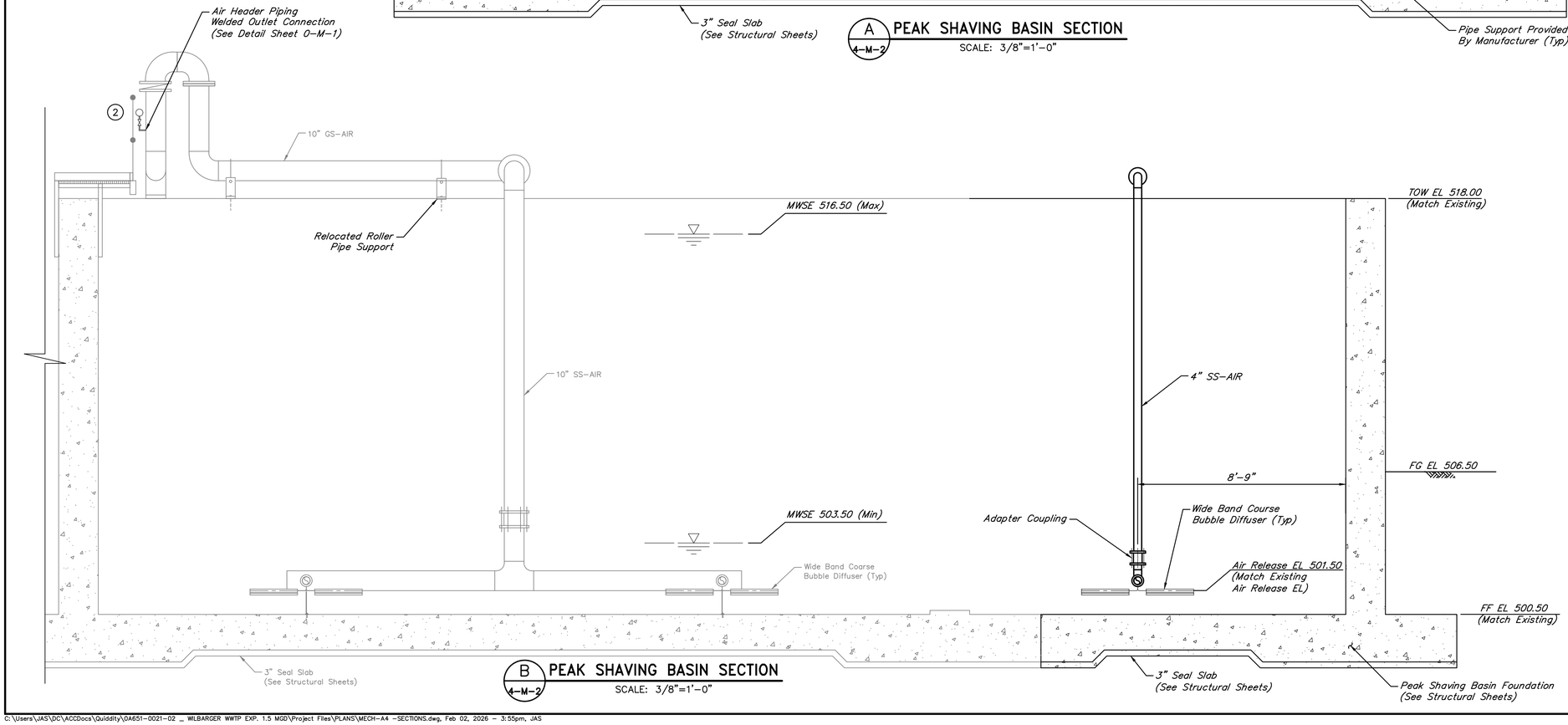

B 4-M-2 **PEAK SHAVING BASIN SECTION**
SCALE: 3/8"=1'-0"

0 1 2 3 6
SCALE: 3/8"=1'

VALVES, FITTINGS, AND ACCESSORIES SCHEDULE

No.	DESCRIPTION
1	4" 90° Bend, PE x FJ
2	Pressure Gauge (PI-04001) w/ 1/2" Ball Valve (BV-04-002)
◎	Indicates Restrained Valve or Fitting

NOTES:

1. Aeration equipment is shown as an illustration only. See Specifications for performance requirements.
2. Contractor shall match existing piping suction centerline for tie-in to peak shaving pumps.
3. All locations, elevations, and dimensions shown are approximate and are based on record drawings. Contractor is responsible for verifying all locations, elevations and dimensions necessary for the work.

NO.	DATE	REVISIONS	APP.

WILBARGER CREEK M.U.D. No. 2
TRAVIS COUNTY, TEXAS

WASTEWATER TREATMENT PLANT EXPANSION TO 1.5 MGD

PEAK SHAVING BASIN SECTIONS – SHEET 1 OF 2

QUIDDITY
Texas Board of Professional Engineers and Land Surveyors Reg. No. F-23290
912 South Capital of Texas Hwy, Suite 300 • Austin, TX 78746 • 512.441.9493

SCALE:	3/8" = 1'-0"	DGN. BY:	ZKELL
DATE:	FEBRUARY 2026	DWN. BY:	SSOMERS
JOB NO.	0A651-0021-02	DWG. NO.	
SUBMITTED:		SURV. BY:	
		F.B. NO.	

STATE OF TEXAS
JORDAN ZYLBERBERG
142350
LICENSED PROFESSIONAL ENGINEER
3/10/26

4-M-4
SHEET NO. 65 OF 230

C:\Users\JAS\DC\ACCDocs\Quiddity\0A651-0021-02 _ WILBARGER WWTP EXP. 1.5 MGD\Project Files\PLANS\MECH-A4 -SECTIONS.dwg, Feb 02, 2026 - 3:55pm, JAS

0 1 2 3 4 5 ORIGINAL SCALE IN INCHES FOR REDUCED PLANS

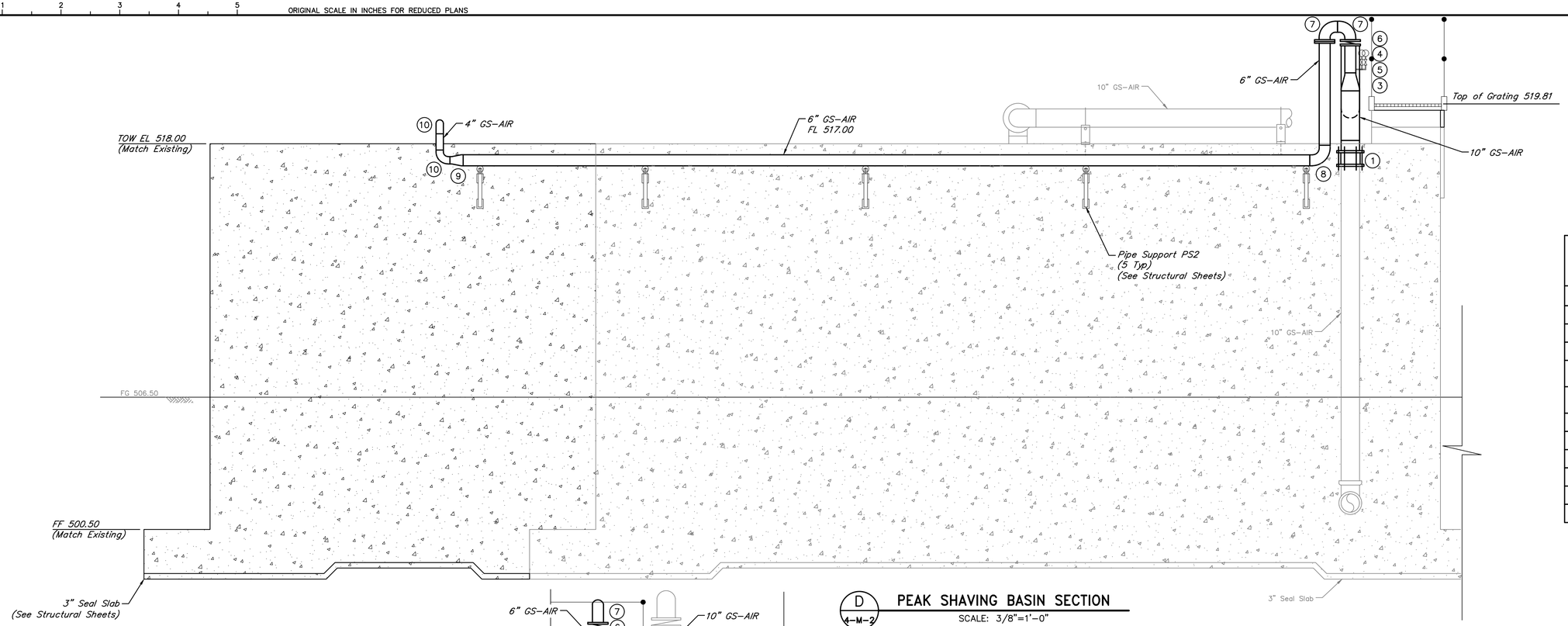

D 4-M-2 **PEAK SHAVING BASIN SECTION**
SCALE: 3/8"=1'-0"

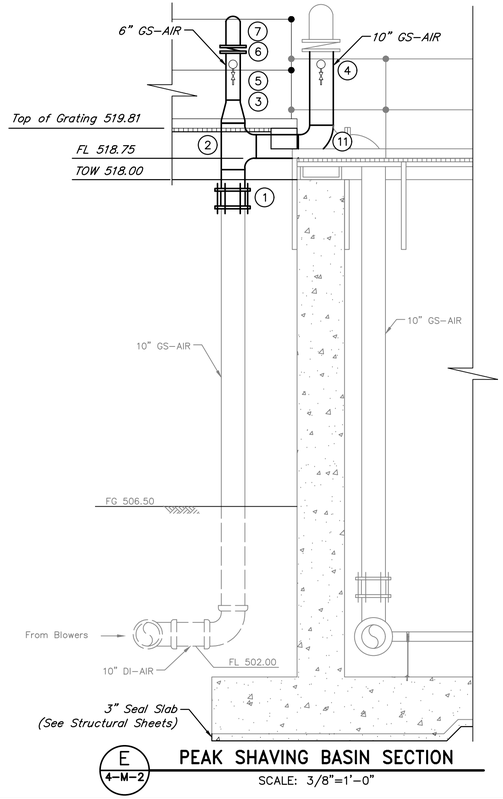

E 4-M-2 **PEAK SHAVING BASIN SECTION**
SCALE: 3/8"=1'-0"

VALVES, FITTINGS, AND ACCESSORIES SCHEDULE

No.	DESCRIPTION
1	10" Sleeve Coupling
2	10" Tee, PE
3	10" x 6" Reducer, PE
4	Pressure Gauge (PI-04001) w/ 1/2" Ball Balve (BV-04-002)
5	Pressure Gauge (PI-04002) w/ 1/2" Ball Balve (BV-04-003)
6	6" Butterfly Valve (BFV-04-002)
7	6" 90° Bend, FJ x PE
8	6" 90° Bend, PE
9	6" x 4" Reducer, PE
10	4" 90° Bend, PE
11	10" 90° Bend, PE

NOTES:

1. All locations, elevations, and dimensions shown are approximate and are based on record drawings. Contractor is responsible for verifying all locations, elevations and dimensions necessary for the work.

NO.	DATE	REVISIONS	APP.

WILBARGER CREEK M.U.D. No. 2
TRAVIS COUNTY, TEXAS

WASTEWATER TREATMENT PLANT
EXPANSION TO 1.5 MGD

PEAK SHAVING BASIN SECTIONS – SHEET 2 OF 2

QUIDDITY
Texas Board of Professional Engineers and Land Surveyors Reg. No. F-23290
912 South Capital of Texas Hwy, Suite 300 ★ Austin, TX 78746 ★ 512.441.9493

SCALE: 3/8" = 1'-0" DGN. BY: ZKELL
DATE: JUNE 2026 DWN. BY: SSOMERS
JOB NO. 0A651-0021-02 DWG. NO.
SUBMITTED: SURV. BY:
F.B. NO.

STATE OF TEXAS
JORDAN ZYLBERBERG
142350
LICENSED PROFESSIONAL ENGINEER
7/2/26

4-M-5
SHEET NO. 67 OF 230

C:\Users\JAS\DC\ACCDocs\Quiddity\0A651-0021-02 _ WILBARGER WWTP EXP. 1.5 MGD\Project Files\PLANS\MECH-A4 -SECTIONS.dwg, Jun 29, 2026 - 11:29am, JAS

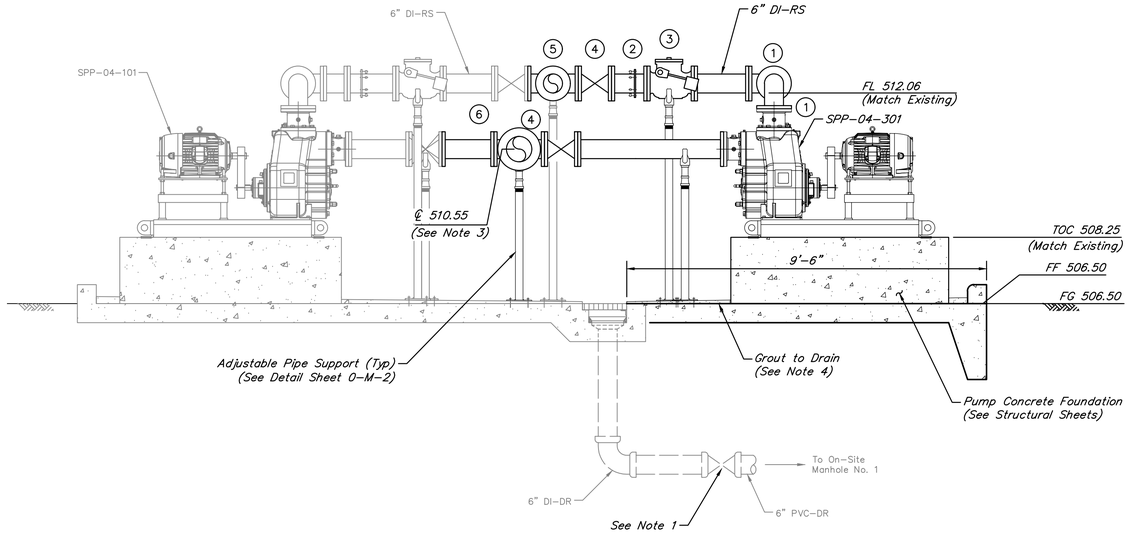

A 4-M-3 **PEAK SHAVING BASIN PUMP STATION SECTION**
SCALE: 1/2"=1'-0"

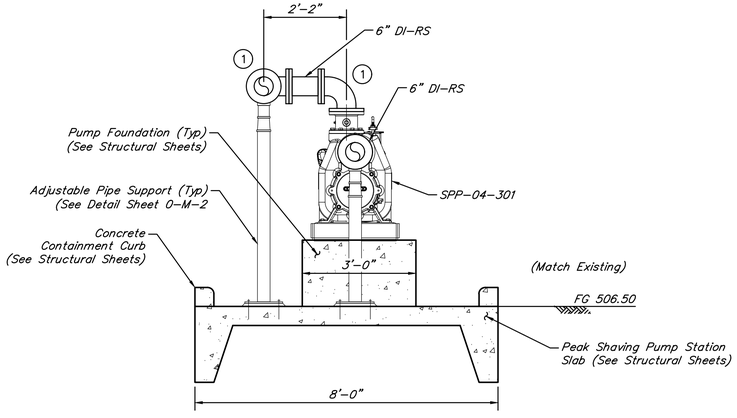

B 4-M-3 **PEAK SHAVING BASIN PUMP STATION SECTION**
SCALE: 1/2"=1'-0"

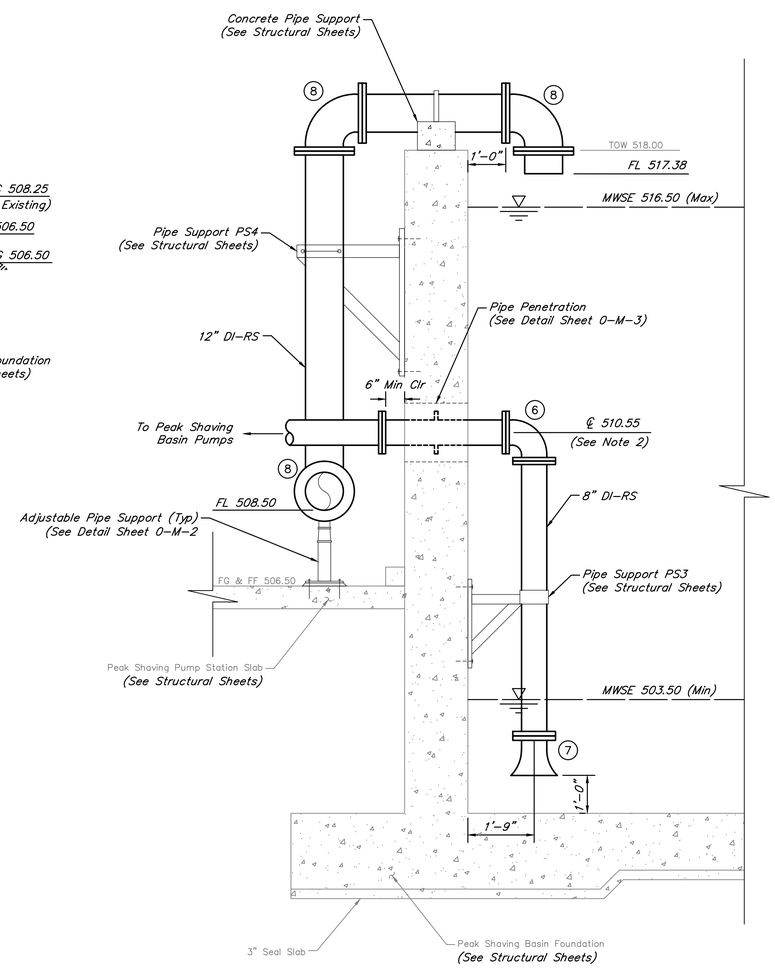

C 4-M-3 **PEAK SHAVING BASIN PUMP STATION SECTION**
SCALE: 1/2"=1'-0"

0 .5 1 2 4 6
SCALE: 1/2" = 1'

VALVES, FITTINGS, AND ACCESSORIES SCHEDULE

No.	DESCRIPTION
1	6" 90° Bend, FJ
2	6" Dismantling Joint
3	6" Swing Check Valve (SCV-04-301)
4	6" Plug Valve (PV-04-301)
5	6" x 6" Tee, FJ
6	8" 90° Bend, FJ
7	8" Flare, FJ
8	12" 90° Bend, FJ

NOTES:

1. Contractor to field adjust valve box and riser to be level with the proposed structure.
2. Contractor shall match existing piping suction centerline for tie-in to peak shaving pumps.
3. All locations, elevations, and dimensions shown are approximate and are based on record drawings. Contractor is responsible for verifying all locations, elevations and dimensions necessary for the work.
4. Contractor to slope grout with a minimum slope of 1%.

NO.	DATE	REVISIONS	APP.

WILBARGER CREEK M.U.D. No. 2
TRAVIS COUNTY, TEXAS

WASTEWATER TREATMENT PLANT
EXPANSION TO 1.5 MGD

PEAK SHAVING BASIN PUMP STATION SECTIONS

QUIDDITY
Texas Board of Professional Engineers and Land Surveyors Reg. No. F-23290
912 South Capital of Texas Hwy, Suite 300 • Austin, TX 78746 • 512.441.9493

SCALE: 1/2" = 1'-0" | DGN. BY: ZKELL
DATE: JUNE 2026 | DWN. BY: SSOMERS
JOB NO. 0A651-0021-02 | DWG. NO.
SUBMITTED: | SURV. BY:
F.B. NO.

STATE OF TEXAS
JORDAN ZYLBERBERG
142350
LICENSED
PROFESSIONAL ENGINEER
7/2/26

4-M-6
SHEET NO. 68 OF 230

0 1 2 3 4 5 ORIGINAL SCALE IN INCHES FOR REDUCED PLANS

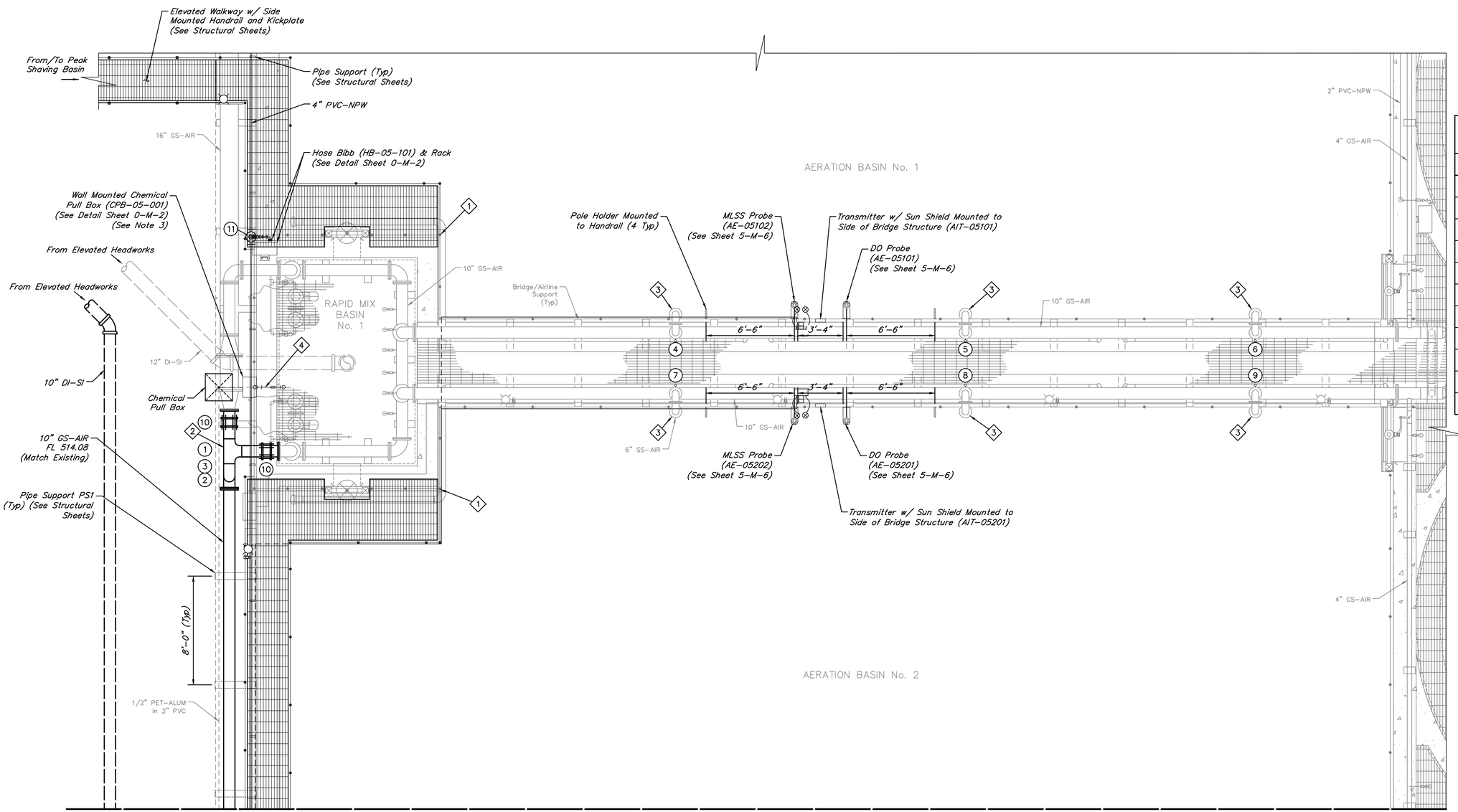

MATCH LINE (SEE SHEET 5-M-2)

0 1 2 4 8 12
SCALE: 1/4" = 1'

VALVES, FITTINGS AND ACCESSORIES SCHEDULE

No.	DESCRIPTION
1	10" x 10" Tee, PE
2	10" 90° Bend, PE x FJ
3	10" 90° Bend, PE
4	Pressure Gauge (PI-05101) w/ 1/2" Ball Valve
5	Pressure Gauge (PI-05102) w/ 1/2" Ball Valve
6	Pressure Gauge (PI-05103) w/ 1/2" Ball Valve
7	Pressure Gauge (PI-05201) w/ 1/2" Ball Valve
8	Pressure Gauge (PI-05202) w/ 1/2" Ball Valve
9	Pressure Gauge (PI-05203) w/ 1/2" Ball Valve
10	10" Flange Adapter Coupling
11	4" x 1" Tee, PO

NOTES:

1. All locations, elevations, and dimensions shown are approximate and are based on record drawings. Contractor is responsible for verifying all locations, elevations and dimensions necessary for the work.
2. Any work that requires the shutdown of an existing secondary process train shall only be initiated once the proposed secondary process treatment train is in service. Shutdown of two secondary process trains at once is prohibited.
3. Contractor shall field route piping to avoid conflict with control panel.

ITEMS OF WORK

No.	DESCRIPTION
1	Existing handrail to be demolished as necessary for walkway installation. Contractor shall connect proposed and existing handrail.
2	Existing 10" 90 Bend to be demolished and replaced with a 10" Tee. Air piping shall be out of service for no longer than 2 hours. Short duration shut-down shall be scheduled with the Engineer and Operator.
3	Contractor to install pressure indicators on each drop leg upstream of the butterfly valves (See Detail Sheet 0-M-1).
4	Contractor to remove and replace existing vertical aluminum sulfate piping including all valves and fittings, and route temporary piping as necessary to ensure no interruption to chemical feed service.

NO.	DATE	REVISIONS	APP.

WILBARGER CREEK M.U.D. No. 2
TRAVIS COUNTY, TEXAS

WASTEWATER TREATMENT PLANT
EXPANSION TO 1.5 MGD

AERATION BASIN Nos. 1 & 2 PLAN

QUIDDITY
Texas Board of Professional Engineers and Land Surveyors Reg. No. F-23290
912 South Capital of Texas Hwy, Suite 300 • Austin, TX 78746 • 512.441.9493

SCALE:	1/4" = 1'-0"	DGN. BY:	ZKELL
DATE:	JUNE 2026	DWN. BY:	SSOMERS
JOB NO.	0A651-0021-02	DWG. NO.	
SUBMITTED:		SURV. BY:	
		F.B. NO.	

STATE OF TEXAS
JORDAN ZYLBERBERG
142350
LICENSED PROFESSIONAL ENGINEER
7/2/26

5-M-1
SHEET NO. 69 OF 230

C:\Users\JAS\DC\ACCDocs\Quiddity\0A651-0021-02 _ WILBARGER WWTP EXP. 1.5 MGD\Project Files\PLANS\MECH-A5.dwg, Jun 26, 2026 - 11:39am, JAS

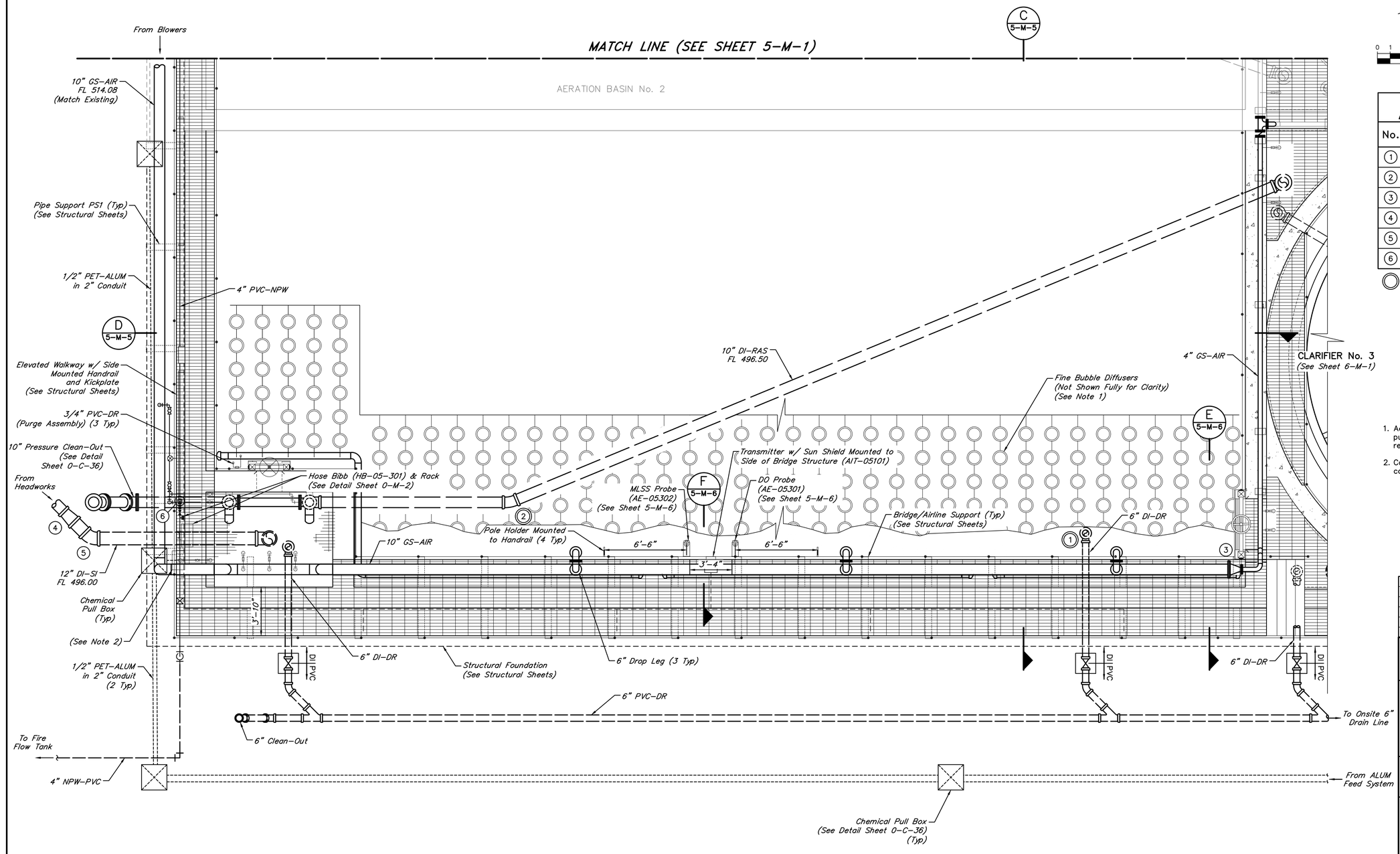

0 1 2 4 8 12
SCALE: 1/4" = 1'

VALVES, FITTINGS, AND ACCESSORIES SCHEDULE

No.	DESCRIPTION
1	6" 90° Bend, MJ
2	10" 22.5° Bend, MJ
3	Weir Gate (WG-05-301)
4	12"x10" Concentric Reducer, MJ
5	12" 45° Bend, MJ
6	4" x 1" Tee, PO

◎ Indicates Restrained Valve or Fitting.

NOTES:

1. Aeration equipment is shown as for illustrative purposes only. See specifications for performance requirements.
2. Contractor shall field route piping to avoid conflict with control panel.

NO.	DATE	REVISIONS	APP.

WILBARGER CREEK M.U.D. No. 2
TRAVIS COUNTY, TEXAS

WASTEWATER TREATMENT PLANT EXPANSION TO 1.5 MGD

AERATION BASIN No. 3 PLAN

QUIDDITY
Texas Board of Professional Engineers and Land Surveyors Reg. No. F-23290
912 South Capital of Texas Hwy, Suite 300 • Austin, TX 78746 • 512.441.9493

SCALE: 1/4" = 1'-0" DGN. BY: ZKELL
DATE: JUNE 2026 DWN. BY: SSOMERS
JOB NO. 0A651-0021-02 DWG. NO.
SUBMITTED: SURV. BY:
F.B. NO.

STATE OF TEXAS
JORDAN ZYLBERBERG
142350
LICENSED PROFESSIONAL ENGINEER
7/2/26

5-M-2
SHEET NO. 70 OF 230

0 1 2 3 4 5 ORIGINAL SCALE IN INCHES FOR REDUCED PLANS

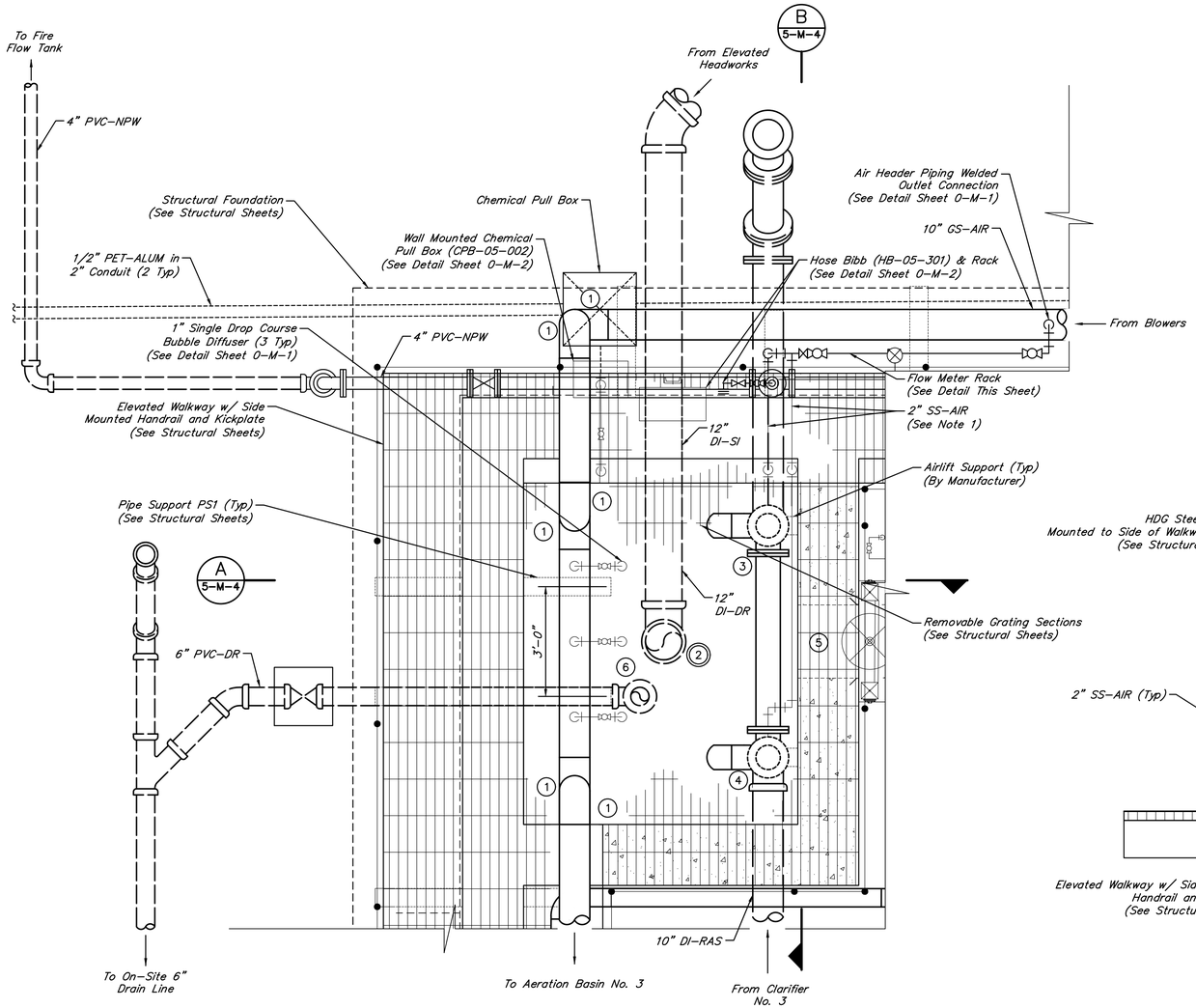

RAPID MIX BASIN PLAN VIEW

SCALE: 1/2" = 1'-0"

DETAIL NOTES:

1. This detail is typical. Contractor shall suit final per specific location requirements, air flow directions, and approved equipment manufacturer requirements.

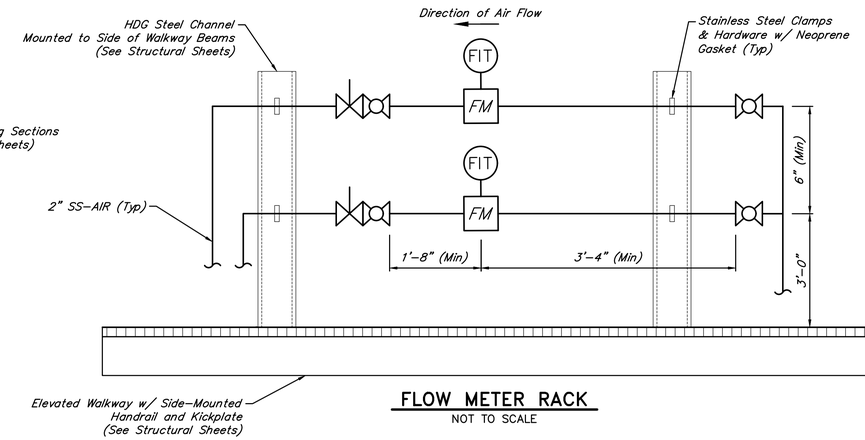

FLOW METER RACK

NOT TO SCALE

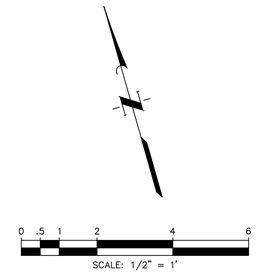

VALVES, FITTINGS, AND ACCESSORIES SCHEDULE

No.	DESCRIPTION
1	10" 90° Bend, PE
2	12" 90° Bend, MJ
3	8" Airlift (AL-05-301)
4	8" Airlift (AL-05-302)
5	Slide Gate (SG-05-301)
6	8" 90° Bend, MJ

◎ Indicates Restrained Valve or Fitting

NOTES:

1. Mount all small diameter piping to walls with stainless steel unistrut & stainless steel hardware. The maximum distance between supports shall be 5'-0".
2. 3" diameter and smaller valves, fittings, and accessories not labeled. See P&IDs for valves.
3. Insulate all above ground piping in accordance with Specification Section 15266.

NO.	DATE	REVISIONS	APP.

WILBARGER CREEK M.U.D. No. 2
TRAVIS COUNTY, TEXAS

WASTEWATER TREATMENT PLANT EXPANSION TO 1.5 MGD

RAPID MIX BASIN PLAN

QUIDDITY
Texas Board of Professional Engineers and Land Surveyors Reg. No. F-23290
912 South Capital of Texas Hwy, Suite 300 • Austin, TX 78746 • 512.441.9493

SCALE:	AS SHOWN	DGN. BY:	ZKELL
DATE:	JUNE 2026	DWN. BY:	SSOMERS
JOB NO.	0A651-0021-02	DWG. NO.	
SUBMITTED:		SURV. BY:	
		F.B. NO.	

STATE OF TEXAS
JORDAN ZYLBERBERG
142350
LICENSED PROFESSIONAL ENGINEER
7/2/26

5-M-3
SHEET NO. 71 OF 230

C:\Users\JAS\DC\ACCDocs\Quiddity\0A651-0021-02 _ WILBARGER WWTP EXP. 1.5 MGD\Project Files\PLANS\MECH-A5.dwg, Jun 25, 2026 - 12:13pm, JAS

0 1 2 3 4 5 ORIGINAL SCALE IN INCHES FOR REDUCED PLANS

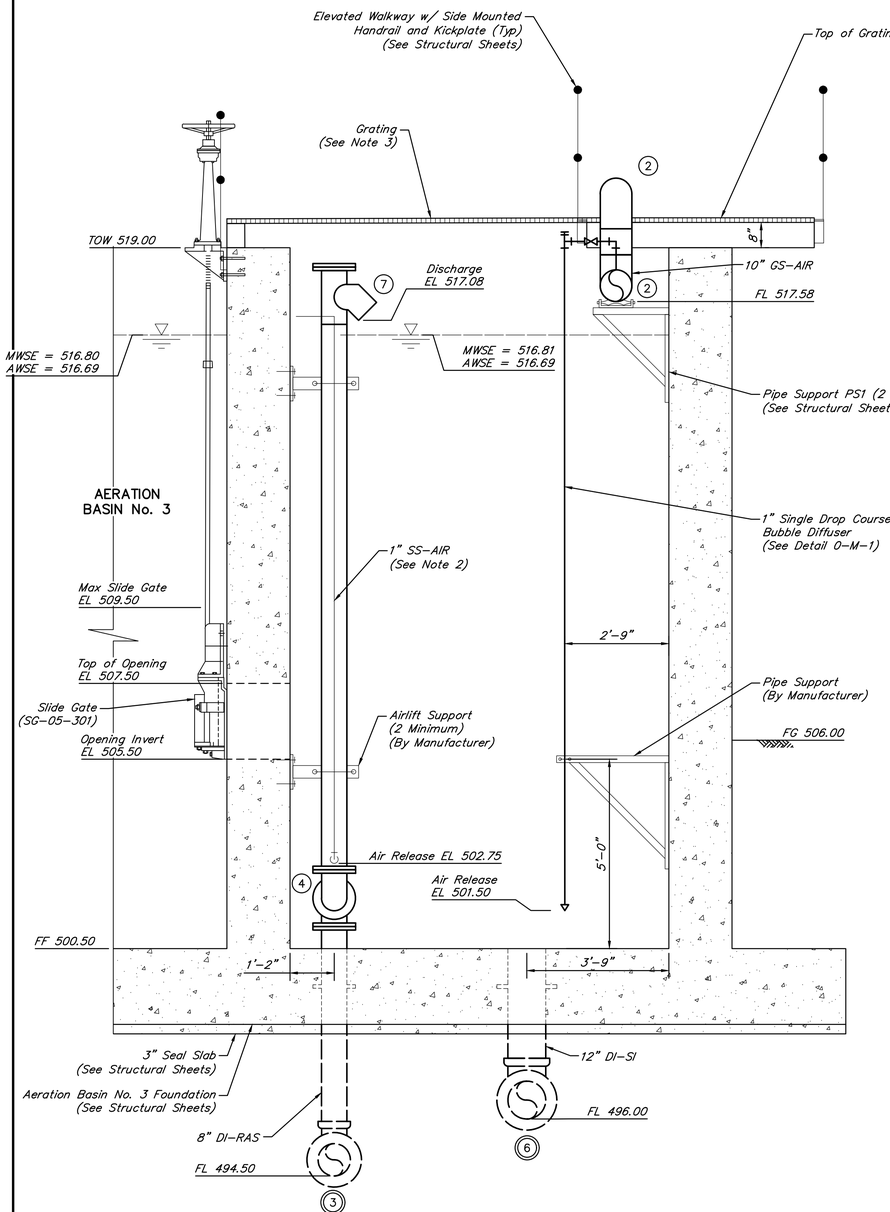

A 5-M-3 RAPID MIX BASIN No. 2 SECTION
SCALE: 1/2"=1'-0"

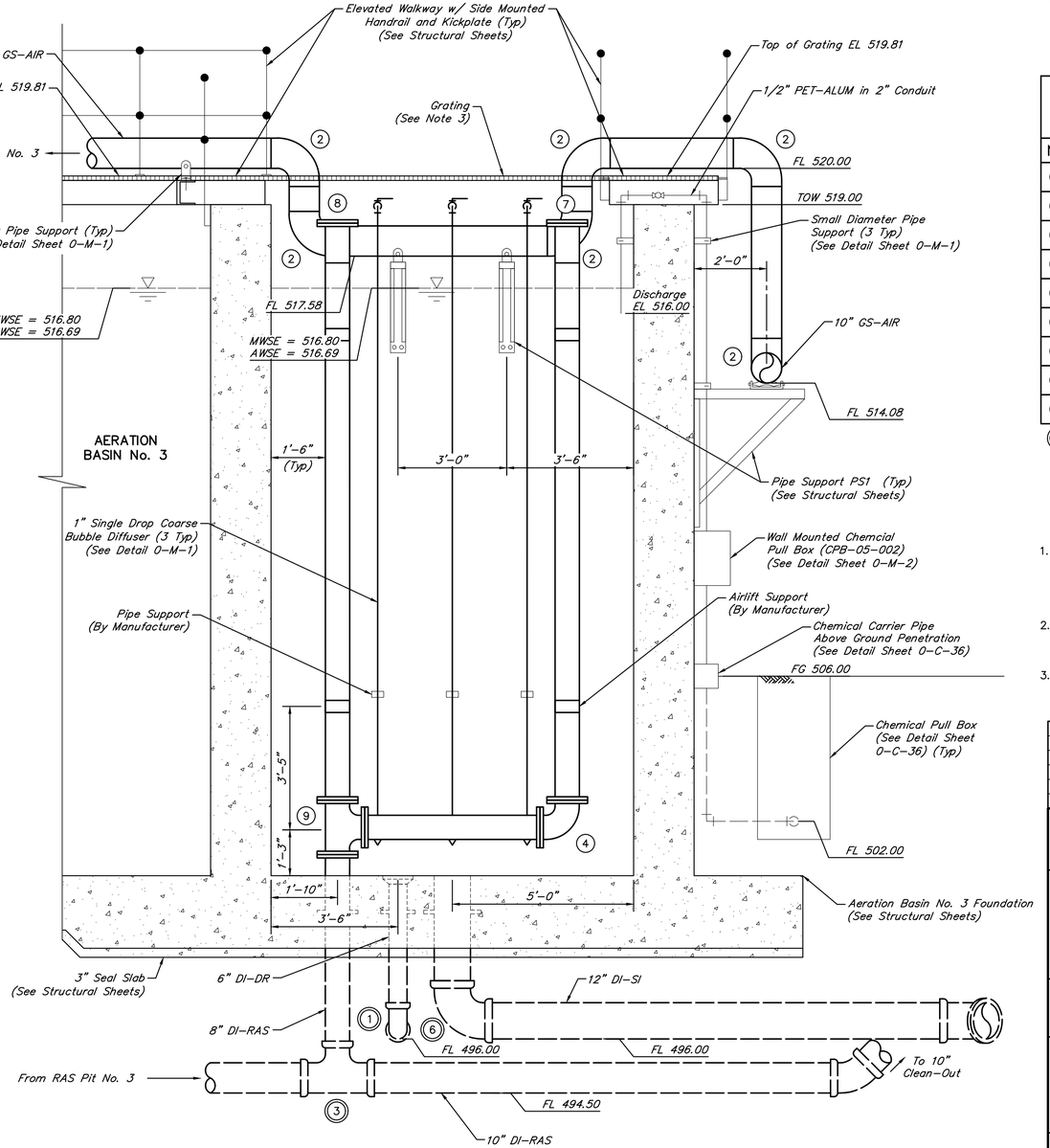

B 5-M-3 RAPID MIX BASIN No. 2 SECTION
SCALE: 1/2"=1'-0"

0 .5 1 2 4 6
SCALE: 1/2" = 1'

VALVES, FITTINGS, AND ACCESSORIES SCHEDULE

No.	DESCRIPTION
1	6" 90° Bend, MJ
2	10" 90° Bend, PE
3	10" x 8" Tee, PE
4	8" 90° Bend, FJ
5	10" 90° Bend, MJ
6	12" 90° Bend, MJ
7	8" Air Lift (AL-05-301)
8	8" Air Lift (AL-05-302)
9	8" x 8" Tee, FJ

◎ Indicates Restrained Valve or Fitting

NOTES:

1. Mount all small diameter piping to walls with stainless steel unistrut & stainless steel hardware. The maximum distance between supports shall be 5'-0".
2. Manufacturer to provide small diameter pipe supports that will mount the 1" SS-AIR to the airlift.
3. Contractor to install sections of removable grating per the structural sheets.

NO.	DATE	REVISIONS	APP.

WILBARGER CREEK M.U.D. No. 2
TRAVIS COUNTY, TEXAS

WASTEWATER TREATMENT PLANT EXPANSION TO 1.5 MGD

AERATION BASIN No. 3 SECTIONS – SHEET 1 OF 3

QUIDDITY
Texas Board of Professional Engineers and Land Surveyors Reg. No. F-23290
912 South Capital of Texas Hwy, Suite 300 • Austin, TX 78746 • 512.441.9493

SCALE:	1/2" = 1'-0"	DGN. BY:	ZKELL
DATE:	JUNE 2026	DWN. BY:	SSOMERS
JOB NO.	0A651-0021-02	DWG. NO.	
SUBMITTED:		SURV. BY:	
		F.B. NO.	

STATE OF TEXAS
JORDAN ZYLBERBERG
142350
LICENSED PROFESSIONAL ENGINEER
7/2/26

5-M-4
SHEET NO. 72 OF 230

C:\Users\JAS\DC\ACCDocs\Quiddity\0A651-0021-02 _ WILBARGER WWTP EXP. 1.5 MGD\Project Files\PLANS\MECH-A5.dwg, Jun 26, 2026 – 11:53am, JAS

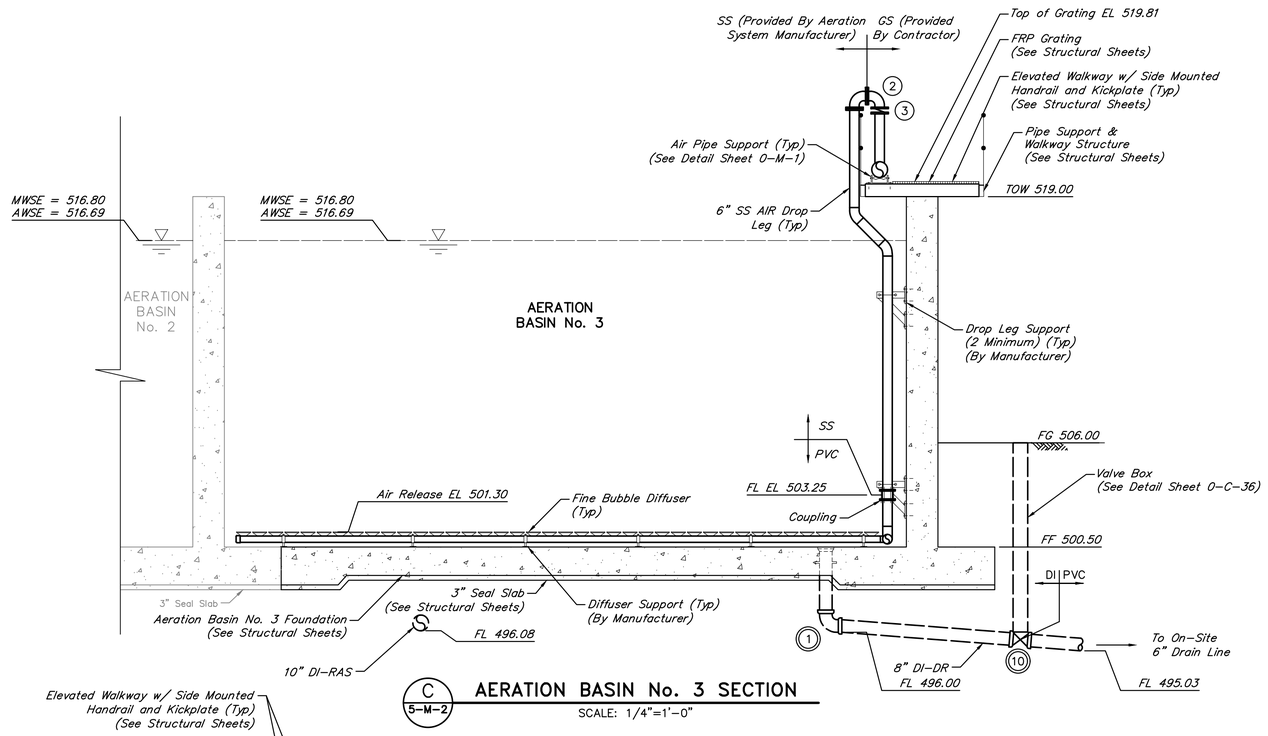

C / 5-M-2 **AERATION BASIN No. 3 SECTION**

SCALE: 1/4"=1'-0"

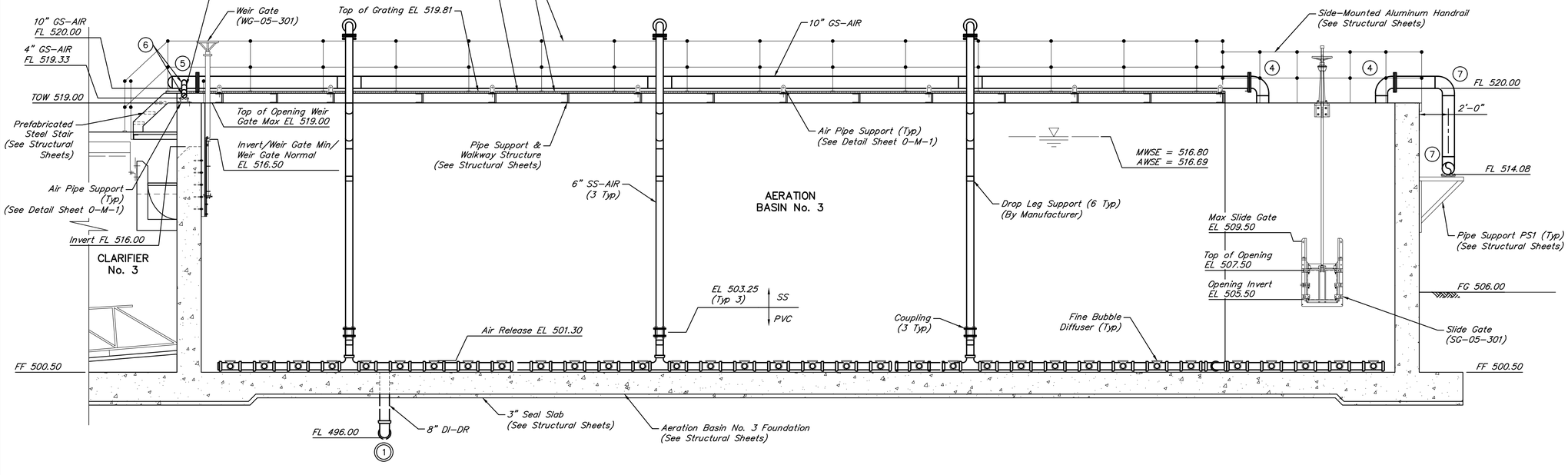

D / 5-M-2 **AERATION BASIN No. 3 SECTION**

SCALE: 1/4"=1'-0"

0 1 2 4 8 12

SCALE: 1/4" = 1'

VALVES, FITTINGS, AND ACCESSORIES SCHEDULE

No.	DESCRIPTION
1	8" 90° Bend, MJ
2	6" 90° Bend, FJ
3	6" Butterfly Valve (BFV-05-304)
4	10" 90° Bend, FJ x PE
5	10" Tee, PE x FJ
6	4" 45° Bend, PE
7	10" 90° Bend, PE
10	8" Plug Valve (PV-05-302)

◎ Indicates Restrained Valve or Fitting

NO.	DATE	REVISIONS	APP.

WILBARGER CREEK M.U.D. No. 2
TRAVIS COUNTY, TEXAS

WASTEWATER TREATMENT PLANT EXPANSION TO 1.5 MGD

AERATION BASIN No. 3 SECTIONS – SHEET 2 OF 3

QUIDDITY
Texas Board of Professional Engineers and Land Surveyors Reg. No. F-23290
912 South Capital of Texas Hwy, Suite 300 • Austin, TX 78746 • 512.441.9493

SCALE: 1/4" = 1'-0"	DGN. BY: ZKELL
DATE: JUNE 2026	DWN. BY: SSOMERS
JOB NO. 0A651-0021-02	DWG. NO.
SUBMITTED:	SURV. BY:
	F.B. NO.

STATE OF TEXAS
JORDAN ZYLBERBERG
142350
LICENSED PROFESSIONAL ENGINEER
7/2/26

5-M-5
SHEET NO. 73 OF 230

0 1 2 3 4 5 ORIGINAL SCALE IN INCHES FOR REDUCED PLANS

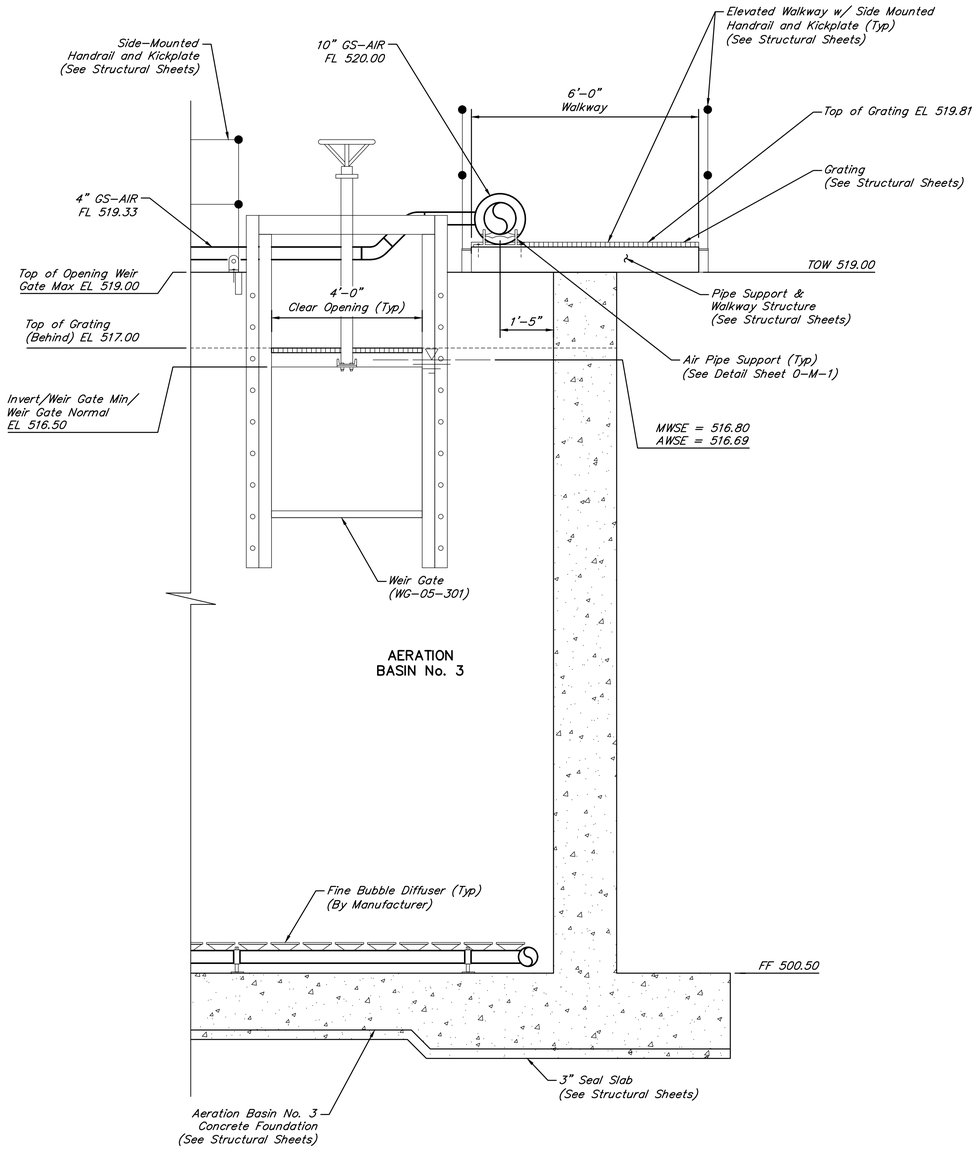

E 5-M-2 **AERATION BASIN EFFLUENT SECTION**
SCALE: 1/2"=1'-0"

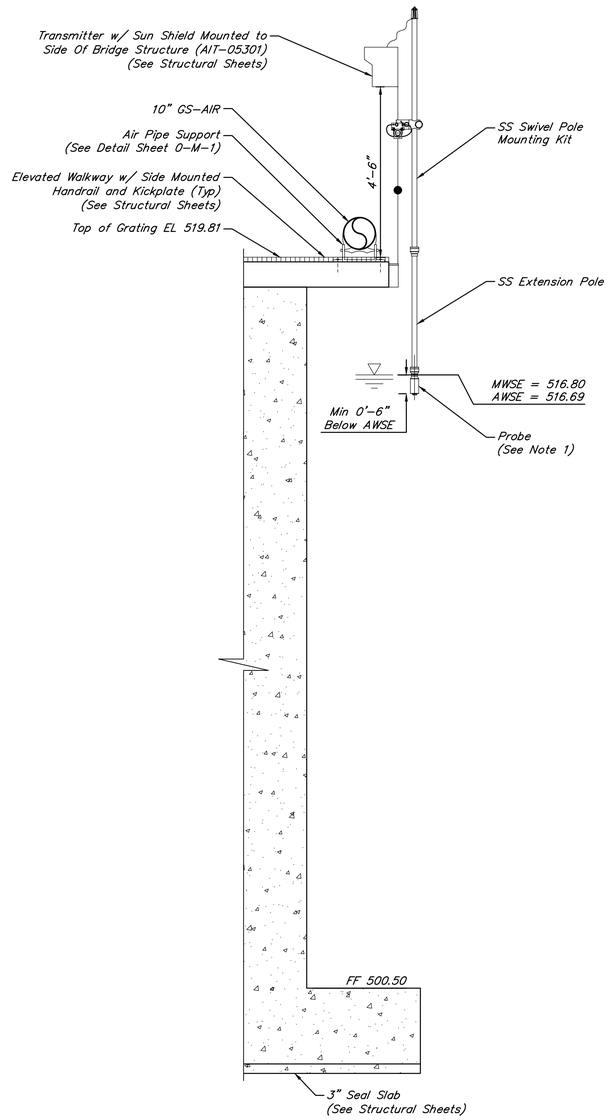

F 5-M-2 **PROBE MOUNTING SECTION**
SCALE: 1/2"=1'-0"

0 .5 1 2 4 6
SCALE: 1/2" = 1'

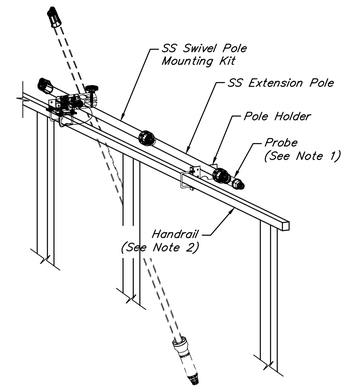

PROBE ISOMETRIC VIEW
NOT TO SCALE

NOTES:

1. MLSS Probe to be attached to SS 90° Probe Adapter. ℄ of probe to have a minimum of 6" submergence below AWSE.
2. Contractor to install hardware appropriate for handrail shape.

NO.	DATE	REVISIONS	APP.

WILBARGER CREEK M.U.D. No. 2
TRAVIS COUNTY, TEXAS

WASTEWATER TREATMENT PLANT EXPANSION TO 1.5 MGD

AERATION BASIN No. 3 SECTIONS – SHEET 3 OF 3

QUIDDITY
Texas Board of Professional Engineers and Land Surveyors Reg. No. F-23290
912 South Capital of Texas Hwy, Suite 300 ★ Austin, TX 78746 ★ 512.441.9493

SCALE: 1/2" = 1'-0"	DGN. BY: ZKELL
DATE: JUNE 2026	DWN. BY: SSOMERS
JOB NO. 0A651-0021-02	DWG. NO.
SUBMITTED:	SURV. BY:
	F.B. NO.

STATE OF TEXAS
JORDAN ZYLBERBERG
142350
LICENSED PROFESSIONAL ENGINEER
7/2/26

5-M-6
SHEET NO. 74 OF 230

C:\Users\JAS\DC\ACCDocs\Quiddity\0A651-0021-02 _ WILBARGER WWTP EXP. 1.5 MGD\Project Files\PLANS\MECH-A5.dwg, Jun 26, 2026 – 11:57am, JAS

ORIGINAL SCALE IN INCHES FOR REDUCED PLANS

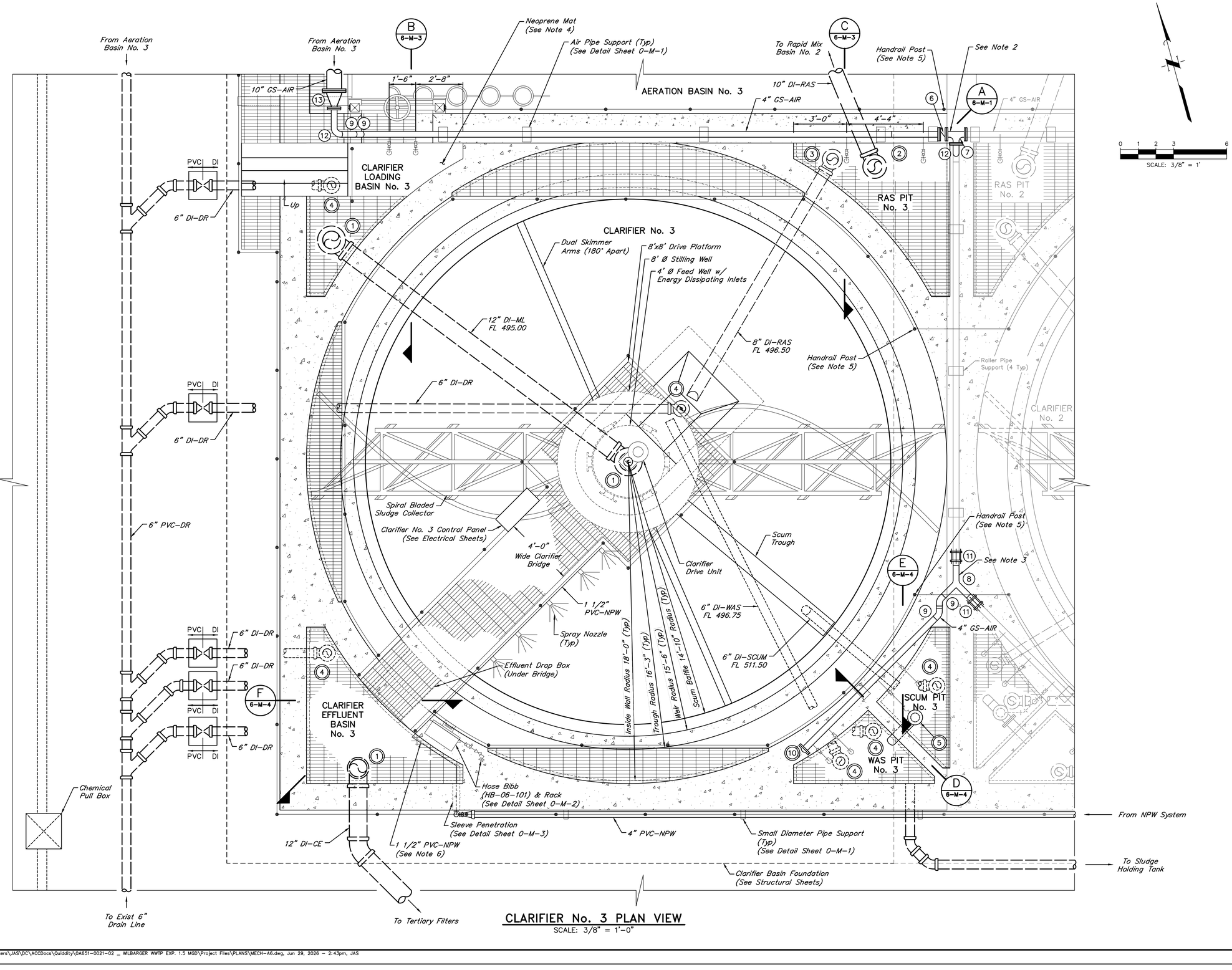

CLARIFIER No. 3 PLAN VIEW

SCALE: 3/8" = 1'-0"

0 1 2 3 6

SCALE: 3/8" = 1'

NOTES:

1. 3" diameter and smaller valves, fittings, and accessories not labeled. See P&IDs for valves.
2. Contractor to cut out 4" 90-degree bend and install 4" Tee to connect existing 4" GS-AIR to proposed 4" GS-AIR. Air service shall be interrupted for no longer than 4 hours and shall be coordinated with the Engineer and Operator. Contractor shall touch-up coat as necessary to ensure pipe is properly galvanized.
3. Contractor to install 4" True Wye and 4" 45-degree bends to connect existing 4" GS-AIR to proposed 4" GS-AIR. Air service shall be interrupted for no longer than 4 hours and shall be coordinated with the Engineer and Operator. Contractor shall touch-up coat as necessary to ensure pipe is properly galvanized.
4. Contractor to install neoprene mats at Clarifier Nos. 1 & 2 near the respective weir gates.
5. Existing handrail and kickplate to be demolished as required to provide access between existing Clarifier No. 2 and proposed Clarifier No. 3.
6. NPW pipe to be supported with Small Diameter Pipe Supports (See Detail Sheet 0-M-1).

VALVES, FITTINGS, AND ACCESSORIES SCHEDULE

No.	DESCRIPTION
1	12" 90° Bend, MJ
2	10" 90° Bend, MJ
3	8" 90° Bend, MJ
4	6" 90° Bend, MJ
5	6" Airlift (AL-06-301)
6	4" Butterfly Valve (BFV-06-301)
7	4"x4" Tee, FJ
8	4" True Wye, PE
9	4" 45° Bend, PE
10	4" Blind Flange
11	4" Flange Adapter Coupling
12	4" 90° Bend, PE
13	10"x4" Reducer, FJ

◯ Indicates Restrained Valve or Fitting.

NO.	DATE	REVISIONS	APP.

WILBARGER CREEK M.U.D. No. 2
TRAVIS COUNTY, TEXAS

WASTEWATER TREATMENT PLANT EXPANSION TO 1.5 MGD

CLARIFIER No. 3 PLAN

QUIDDITY
Texas Board of Professional Engineers and Land Surveyors Reg. No. F-23290
912 South Capital of Texas Hwy, Suite 300 • Austin, TX 78746 • 512.441.9493

SCALE: 3/8" = 1'-0"	DGN. BY: ZKELL
DATE: JUNE 2026	DWN. BY: CCONSOLACION
JOB NO. 0A651-0021-02	DWG. NO.
SUBMITTED:	SURV. BY:
	F.B. NO.

STATE OF TEXAS
JORDAN ZYLBERBERG
142350
LICENSED PROFESSIONAL ENGINEER
7/2/26

6-M-1
SHEET NO. 75 OF 230

C:\Users\JAS\DC\ACCDocs\Quiddity\0A651-0021-02 _ WILBARGER WWTP EXP. 1.5 MGD\Project Files\PLANS\MECH-A6.dwg, Jun 29, 2026 - 2:43pm, JAS

ORIGINAL SCALE IN INCHES FOR REDUCED PLANS

SCALE: 1/2" = 1'

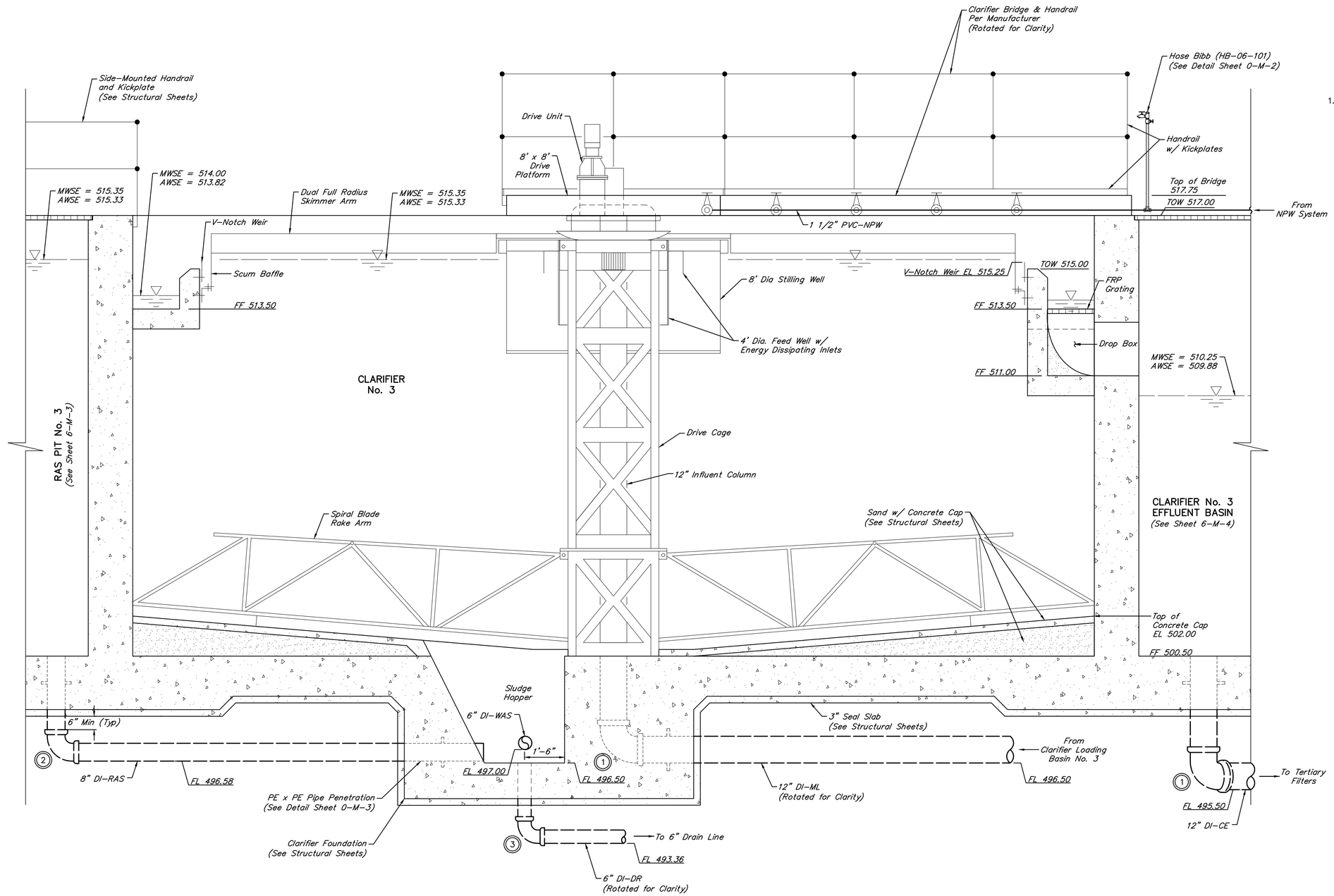

A 6-M-1 CLARIFIER SECTION
SCALE: 1/2" = 1'-0"

NOTES:

1. 3" diameter and smaller valves, fittings, and accessories not labeled. See P&IDs for valves.

VALVES, FITTINGS, AND ACCESSORIES SCHEDULE

No.	DESCRIPTION
1	12" 90° Bend, MJ
2	8" 90° Bend, MJ
3	6" 90° Bend, MJ

◎ Indicates Restrained Valve or Fitting.

NO.	DATE	REVISIONS	APP.

WILBARGER CREEK M.U.D. No. 2
TRAVIS COUNTY, TEXAS

WASTEWATER TREATMENT PLANT EXPANSION TO 1.5 MGD

CLARIFIER No. 3 SECTIONS – SHEET 1 OF 3

QUIDDITY
Texas Board of Professional Engineers and Land Surveyors Reg. No. F-23290
912 South Capital of Texas Hwy, Suite 300 • Austin, TX 78746 • 512.441.9493

SCALE:	1/2" = 1'-0"	DGN. BY:	ZKELL
DATE:	MARCH 2026	DWN. BY:	CCONSOLACION
JOB NO.	0A651-0021-02	DWG. NO.	
SUBMITTED:		SURV. BY:	
		F.B. NO.	

STATE OF TEXAS
JORDAN ZYLBERBERG
142350
LICENSED PROFESSIONAL ENGINEER
3/10/26

6-M-2
SHEET NO. 75 OF 230

C:\Users\DRK\DC\ACCDocs\Quiddity – Water–\0A651-0021-02 _ WILBARGER WWTP EXP. 1.5 MGD\Project Files\PLANS\MECH-A6.dwg, Mar 09, 2026 – 3:39pm, DRK

0 .5 1 2 4 6
SCALE: 1/2" = 1'

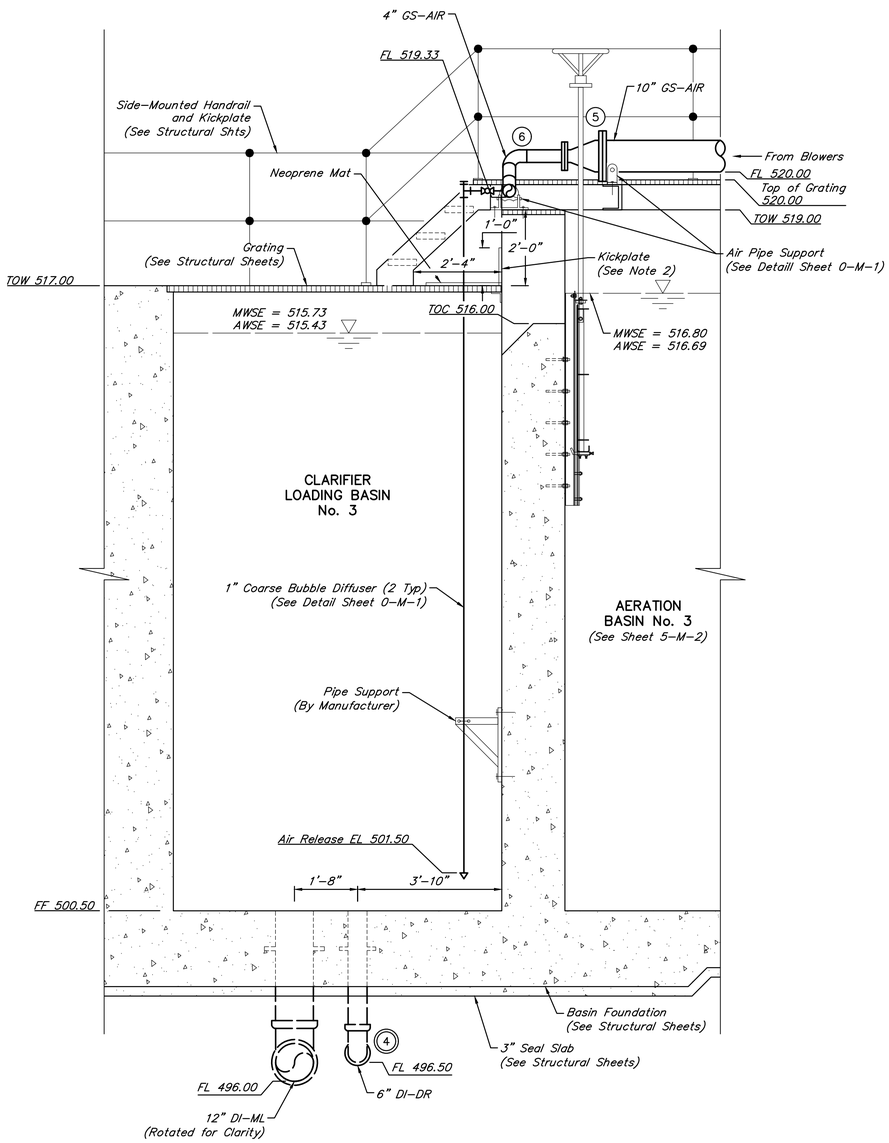

B 6–M–1 CLARIFIER LOADING BASIN SECTION
SCALE: 1/2" = 1'–0"

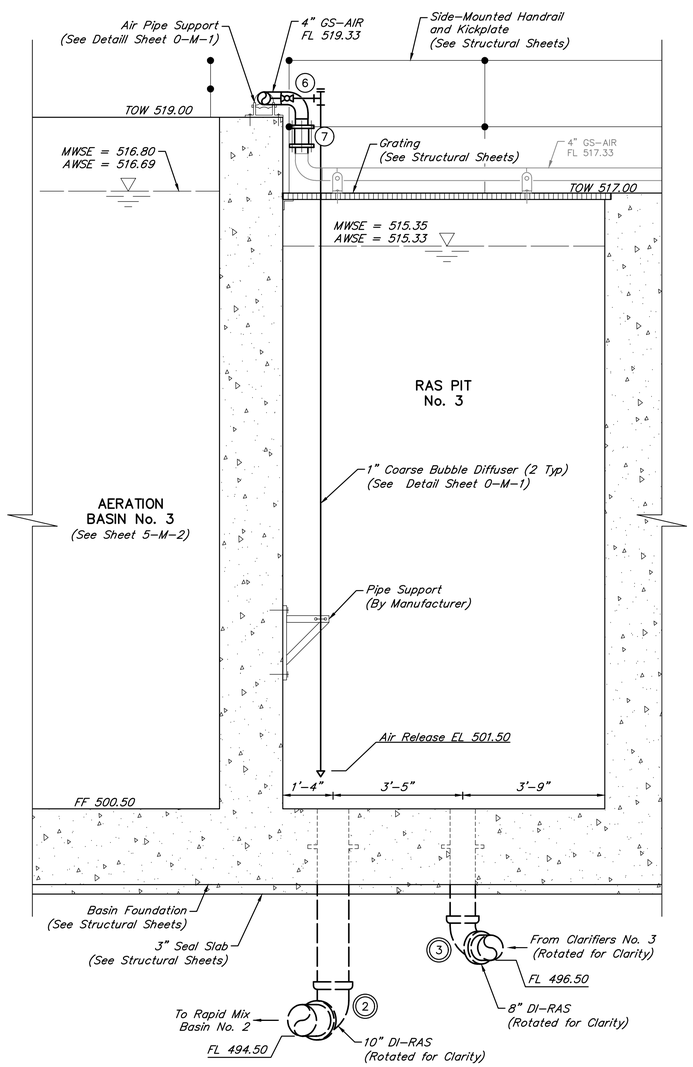

C 6–M–1 RAS PIT No. 3 SECTION
SCALE: 1/2" = 1'–0"

NOTES:

1. 3" diameter and smaller valves, fittings, and accessories not labeled. See P&IDs for valves.
2. Contractor to also install kick plates between the grating at the weir opening at Clarifier Nos. 1 & 2.

VALVES, FITTINGS, AND ACCESSORIES SCHEDULE	
No.	DESCRIPTION
1	12" 90° Bend, MJ
2	10" 90° Bend, MJ
3	8" 90° Bend, MJ
4	6" 90° Bend, MJ
5	10" x 4" Reducer, FJ
6	4" 90° Bend, PE
7	4" Sleeve Coupling

◎ Indicates Restrained Valve or Fitting.

NO.	DATE	REVISIONS	APP.

WILBARGER CREEK M.U.D. No. 2
TRAVIS COUNTY, TEXAS

WASTEWATER TREATMENT PLANT EXPANSION TO 1.5 MGD

CLARIFIER No. 3 SECTIONS – SHEET 2 OF 3

QUIDDITY
Texas Board of Professional Engineers and Land Surveyors Reg. No. F-23290
912 South Capital of Texas Hwy, Suite 300 • Austin, TX 78746 • 512.441.9493

SCALE:	1/2" = 1'–0"	DGN. BY:	ZKELL
DATE:	MARCH 2026	DWN. BY:	CCONSOLACION
JOB NO.	0A651–0021–02	DWG. NO.	
SUBMITTED:		SURV. BY:	
		F.B. NO.	

STATE OF TEXAS
JORDAN ZYLBERBERG
142350
LICENSED PROFESSIONAL ENGINEER
3/10/26

6–M–3
SHEET NO. 76 OF 230

C:\Users\DRK\DC\ACCDocs\Quiddity – Water–\0A651–0021–02 _ WILBARGER WWTP EXP. 1.5 MGD\Project Files\PLANS\MECH–A6.dwg, Mar 09, 2026 – 4:43pm, DRK

ORIGINAL SCALE IN INCHES FOR REDUCED PLANS

SCALE: 1/2" = 1'

NOTES:

1. This airlift is located in Scum Pit No. 3 and is shown for clarity.

VALVES, FITTINGS, AND ACCESSORIES SCHEDULE	
No.	DESCRIPTION
1	6" 90° Bend, MJ
2	12" 90° Bend, MJ
3	1" Ball Valve (BV-06-301)
4	1" Ball Valve (BV-06-302)
◎	Indicates Restrained Valve or Fitting.

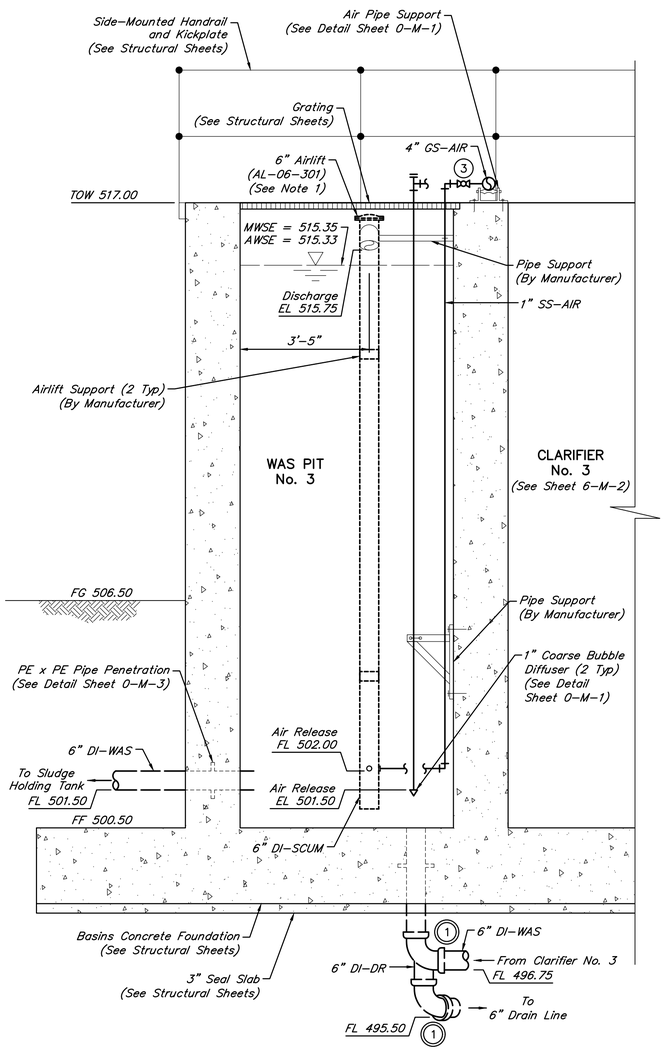

D 6-M-1 **WAS PIT No. 3 SECTION**
SCALE: 1/2" = 1'-0"

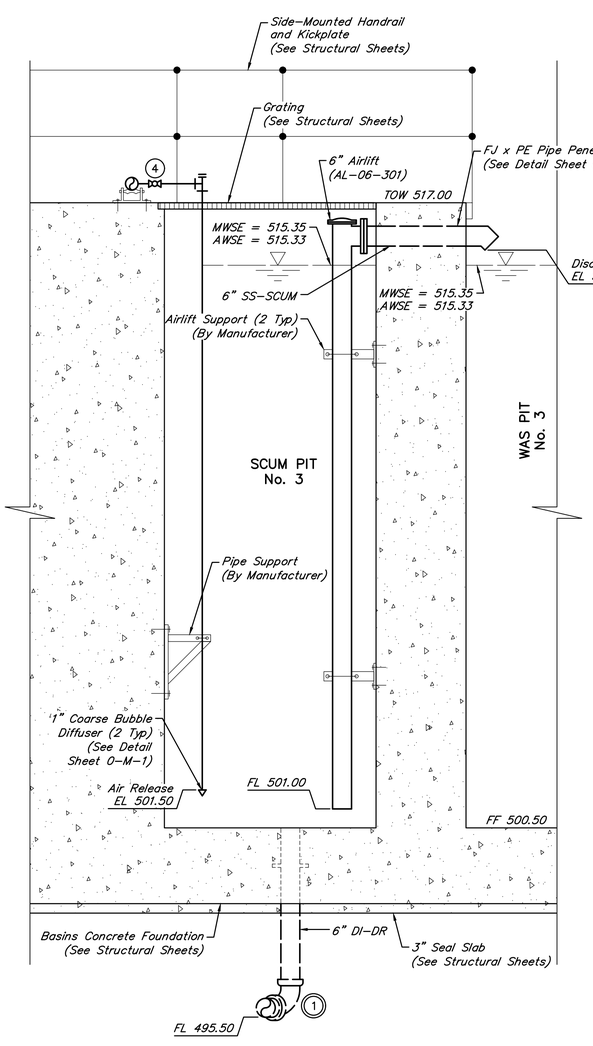

E 6-M-1 **SCUM PIT No. 3 SECTION**
SCALE: 1/2" = 1'-0"

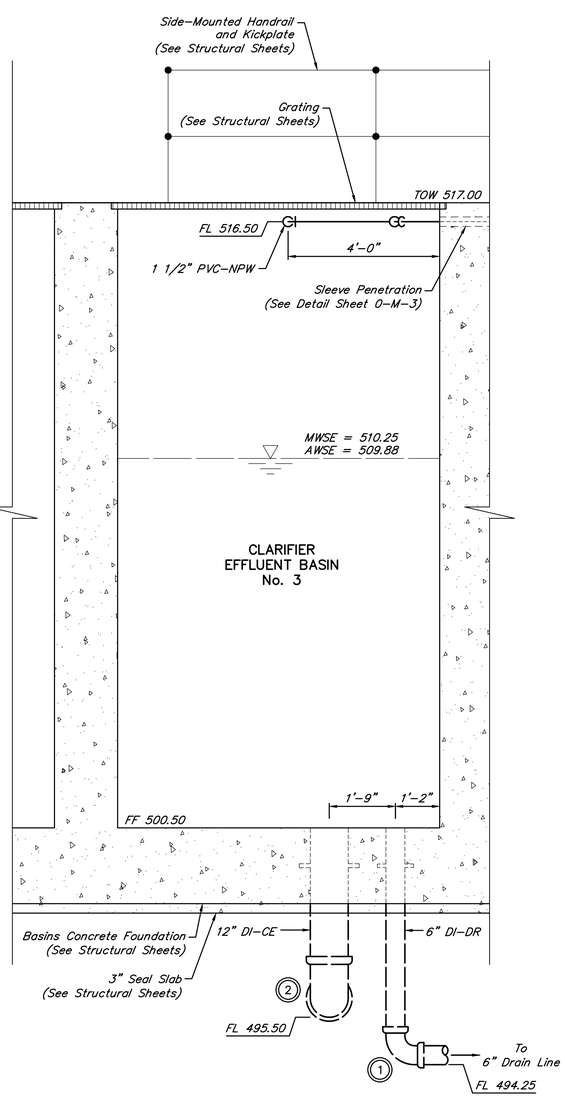

F 6-M-1 **CLARIFIER EFFLUENT BASIN No. 3 SECTION**
SCALE: 1/2" = 1'-0"

NO.	DATE	REVISIONS	APP.

WILBARGER CREEK M.U.D. No. 2
TRAVIS COUNTY, TEXAS

WASTEWATER TREATMENT PLANT EXPANSION TO 1.5 MGD

CLARIFIER No. 3 SECTIONS – SHEET 3 OF 3

QUIDDITY
Texas Board of Professional Engineers and Land Surveyors Reg. No. F-23290
912 South Capital of Texas Hwy, Suite 300 • Austin, TX 78746 • 512.441.9493

SCALE: 1/2" = 1'-0" DGN. BY: ZKELL
DATE: JUNE 2026 DWN. BY: CCONSOLACION
JOB NO. 0A651-0021-02 DWG. NO.
SUBMITTED: SURV. BY:
F.B. NO.

STATE OF TEXAS
JORDAN ZYLBERBERG
142350
LICENSED PROFESSIONAL ENGINEER
7/2/26

6-M-4
SHEET NO. 78 OF 230

C:\Users\JAS\DC\ACCDocs\Quiddity\0A651-0021-02 _ WILBARGER WWTP EXP. 1.5 MGD\Project Files\PLANS\MECH-A6.dwg, Jun 29, 2026 – 2:46pm, JAS

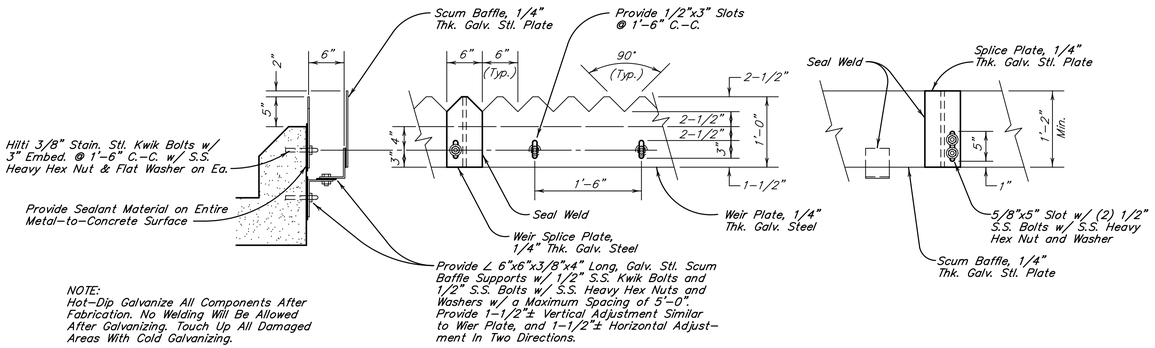

NOTE:
Hot-Dip Galvanize All Components After Fabrication. No Welding Will Be Allowed After Galvanizing. Touch Up All Damaged Areas With Cold Galvanizing.

CLARIFIER WEIR PLATE & SCUM BAFFLE
NOT TO SCALE

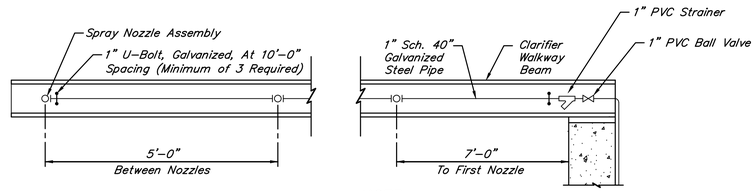

NOTE:

1. All valves and strainers on the proposed clarifier spray system shall be installed within 12" of the clarifier walkway for ease of access.

CLARIFIER SPRAY SYSTEM DETAIL
NOT TO SCALE

NOTES:

Top of scum trough must not exceed 1" above the water surface elvation.

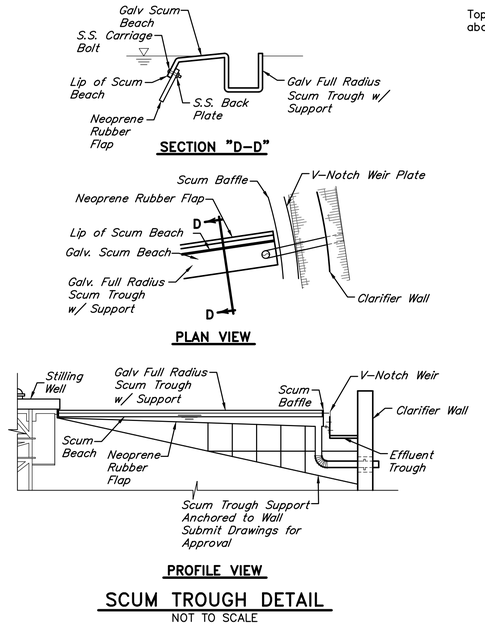

SCUM TROUGH DETAIL
NOT TO SCALE

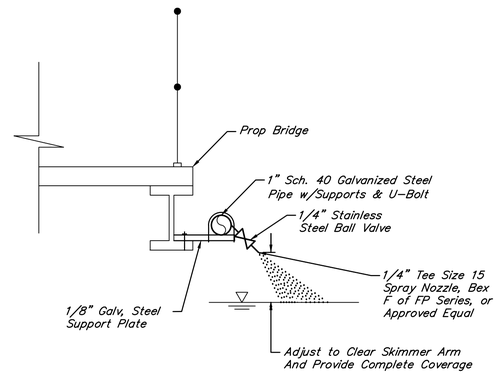

CLARIFIER SPRAY NOZZLE ASSEMBLY
NOT TO SCALE

NO.	DATE	REVISIONS	APP.

WILBARGER CREEK M.U.D. No. 2
TRAVIS COUNTY, TEXAS

WASTEWATER TREATMENT PLANT EXPANSION TO 1.5 MGD

CLARIFIER DETAILS

QUIDDITY
Texas Board of Professional Engineers and Land Surveyors Reg. No. F-23290
912 South Capital of Texas Hwy, Suite 300 • Austin, TX 78746 • 512.441.9493

SCALE:	NO SCALE	DGN. BY:	ZKELL
DATE:	JUNE 2026	DWN. BY:	CCONSOLACION
JOB NO.	0A651-0021-02	DWG. NO.	
SUBMITTED:		SURV. BY:	
		F.B. NO.	

STATE OF TEXAS
JORDAN ZYLBERBERG
142350
LICENSED PROFESSIONAL ENGINEER
7/2/26

6-M-5
SHEET NO. 79 OF 230

0 1 2 3 4 5 ORIGINAL SCALE IN INCHES FOR REDUCED PLANS

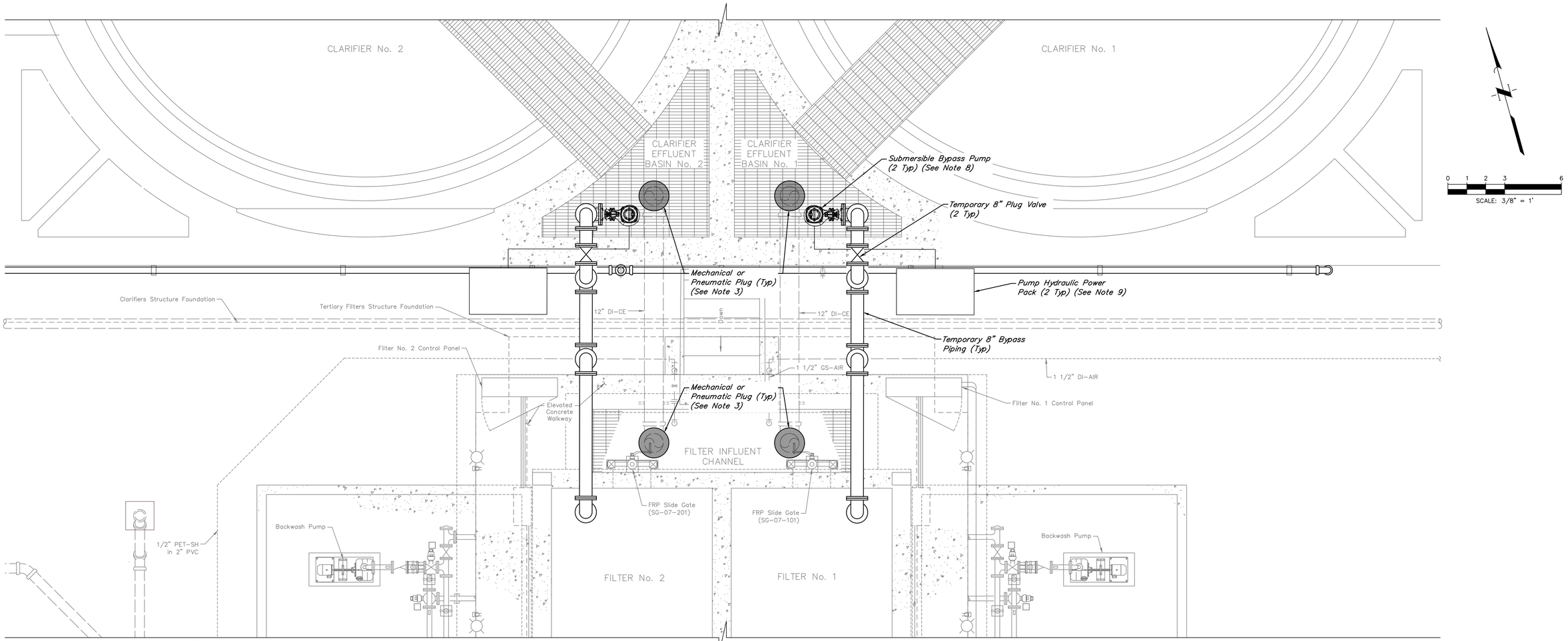

NOTES:

1. Contractor is responsible for coordination with operator and engineer prior to commencement of bypass operations.
2. Contractor shall assume all responsibility for providing adequate system monitoring during bypass implementation, including all control monitoring, bypass set up, operation, and spills (no separate pay). Bypass pumping shall include delivery, set up, means of power for pumps & controls, and removal for the duration of the required bypass. The bypass system shall have following duty conditions.

   695 GPM @ 12' TDH
3. Contractor shall install temporary plugs at the 12" piping in the Clarifier Effluent Basins and the Filter Influent Channel following setup of bypass system. Plugs shall be removed following completion of bypass operations.
4. Contractor shall secure all bypass pumping equipment and associated structures as at all times.
5. Contractor is responsible for leaks and cleanup related to the bypass system at no additional cost to the owner.
6. Contractor shall provide required hard piping, valves, and supports for proper bypass operation. Vertical suction and discharge piping installed at the Clarifier Effluent Basins and Filter Influent Channel must be hard piping such as HDPE. Horizontal piping may be hard piping or hoses. All piping must have restrained joints.
7. Temporary piping shall be secured to the existing Clarifier and Filter Basin structures.
8. Contractor shall remove and replace existing grating at the Clarifier Effluent Basins as needed to drop the temporary submersible bypass pumps into the basins and conduct operations. The submersible bypass pump shall be secured to the Clarifier Effluent Basins.
9. Diesel driven pump power module(s) shall be placed out of the walkway and connected to the bypass pump as needed for pump operation. Ensure proper covering for any above ground conduits.
10. Connection of the proposed 12" Clarifier Effluent Basin No. 3 piping to the existing Filter Influent Channel shall only commence after the bypass system is installed and operational.
11. Bypass discharge piping shall sweep in smooth and provide smooth discharge flow into the receiving waters. Discharge flows shall not splash or drop into receiving waters.

NO.	DATE	REVISIONS	APP.

WILBARGER CREEK M.U.D. No. 2
TRAVIS COUNTY, TEXAS

WASTEWATER TREATMENT PLANT
EXPANSION TO 1.5 MGD

TERTIARY FILTERS BYPASS PLAN

QUIDDITY
Texas Board of Professional Engineers and Land Surveyors Reg. No. F-23290
912 South Capital of Texas Hwy, Suite 300 • Austin, TX 78746 • 512.441.9493

SCALE:	3/8" = 1'-0"	DGN. BY:	ZAC
DATE:	JUNE 2026	DWN. BY:	SSOMERS
JOB NO.	0A651-0021-02	DWG. NO.	
SUBMITTED:		SURV. BY:	
		F.B. NO.	

STATE OF TEXAS
ZACHARY A. COOPER
156249
LICENSED PROFESSIONAL ENGINEER
7/1/26

7-M-1
SHEET NO. 80 OF 230

C:\Users\JAS\DC\ACCDocs\Quiddity\0A651-0021-02 _ WILBARGER WWTP EXP. 1.5 MGD\Project Files\PLANS\MECH-A7.dwg, Jun 29, 2026 – 3:09pm, JAS

0 1 2 3 4 5 ORIGINAL SCALE IN INCHES FOR REDUCED PLANS

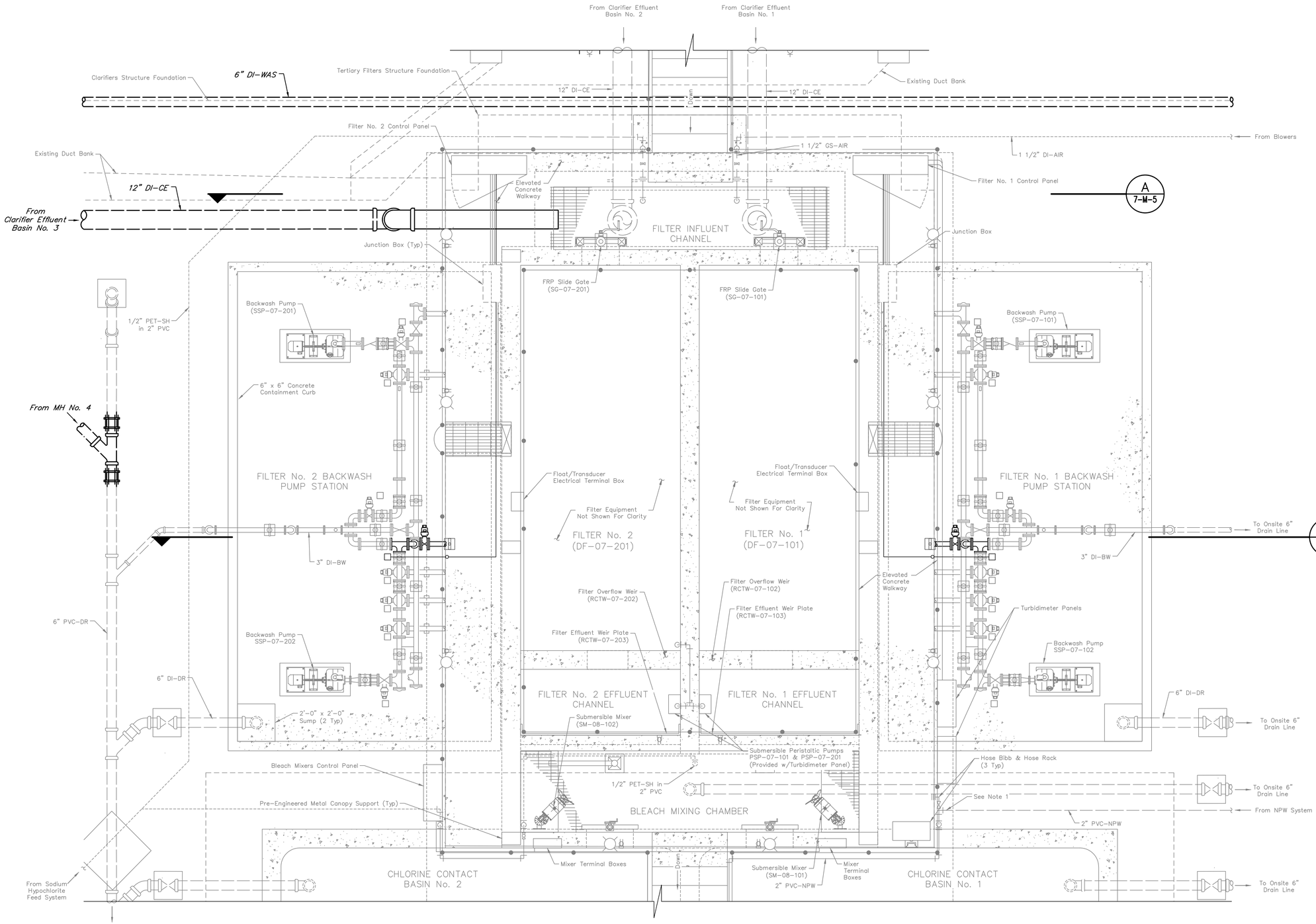

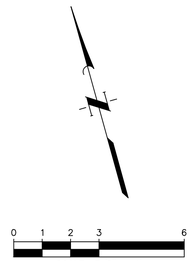

NOTES:

1. One filter shall remain in service at all times during filter disk and backwash piping installation.

NO.	DATE	REVISIONS	APP.

WILBARGER CREEK M.U.D. No. 2
TRAVIS COUNTY, TEXAS

WASTEWATER TREATMENT PLANT
EXPANSION TO 1.5 MGD

TERTIARY FILTERS OVERALL PLAN

QUIDDITY
Texas Board of Professional Engineers and Land Surveyors Reg. No. F-23290
912 South Capital of Texas Hwy, Suite 300 • Austin, TX 78746 • 512.441.9493

SCALE:	3/8" = 1'-0"	DGN. BY:	ZAC
DATE:	FEBRUARY 2026	DWN. BY:	CCONSOLACION
JOB NO.	0A651-0021-02	DWG. NO.	
SUBMITTED:		SURV. BY:	
		F.B. NO.	

STATE OF TEXAS
ZACHARY A. COOPER
156249
LICENSED PROFESSIONAL ENGINEER
3/10/26

7-M-2
SHEET NO. 80 OF 230

C:\Users\ssomers\DC\ACCDocs\Quiddity - Water-\0A651-0021-02 _ WILBARGER WWTP EXP. 1.5 MGD\Project Files\PLANS\MECH-A7.dwg, Jan 29, 2026 - 2:02pm, ssomers

0 1 2 3 4 5 ORIGINAL SCALE IN INCHES FOR REDUCED PLANS

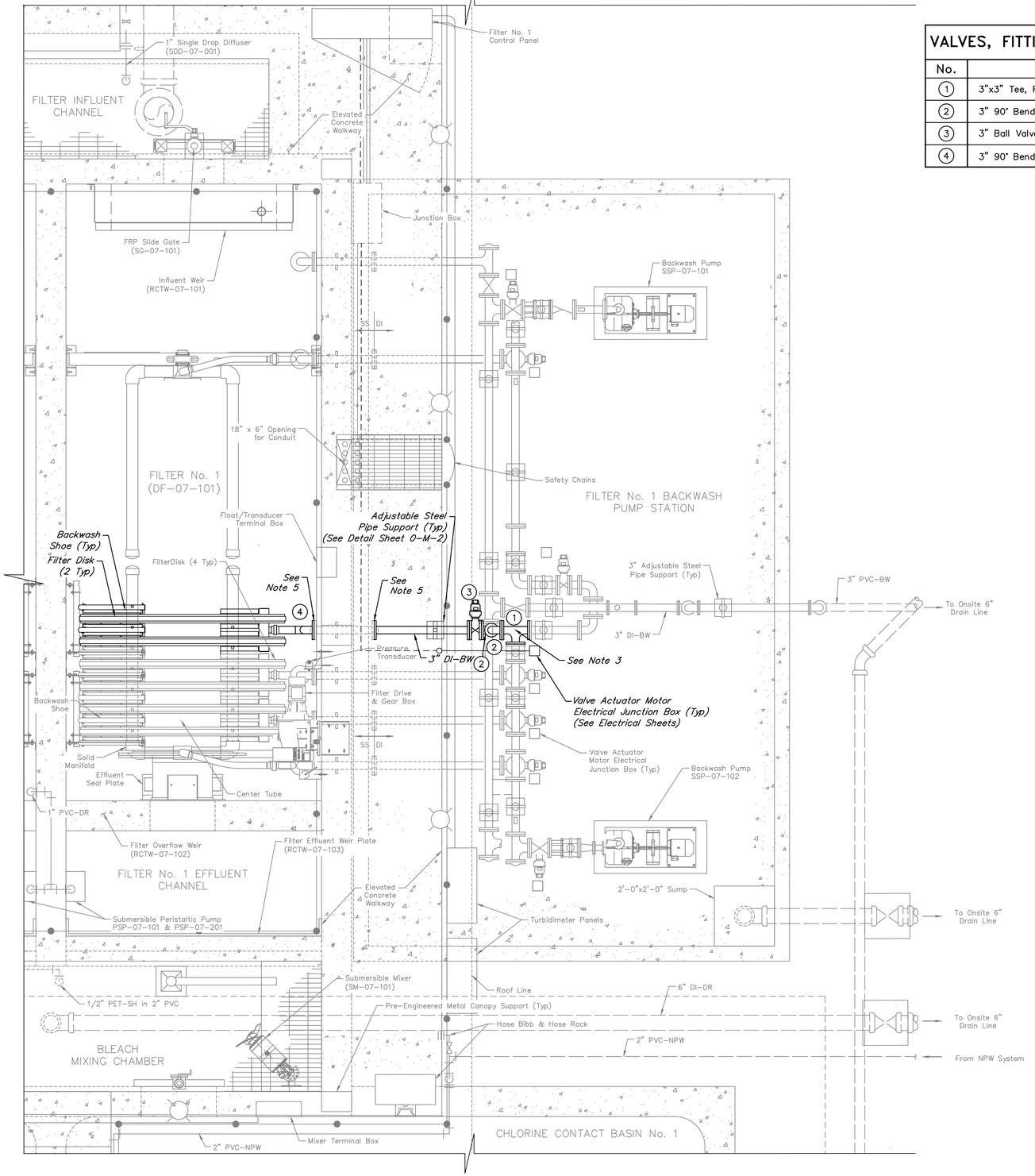

VALVES, FITTINGS, AND ACCESSORIES SCHEDULES

No.	DESCRIPTION
1	3"x3" Tee, FJ
2	3" 90° Bend, FJ
3	3" Ball Valve w/ Electric Actuator, FJ (BV-07-117)
4	3" 90° Bend

0 .5 1 2 4 6
SCALE: 1/2" = 1'

NOTES:

1. Mount all small diameter piping to walls with stainless steel unistrut & stainless steel hardware. The maximum distance between supports shall be 4'-0".
2. Contractor shall furnish & install isolation kits at SS/DI interface for 3" Backwash piping.
3. Existing 3" 90° bend to be removed and replaced with 3"x3" Tee, FJ.
4. Contractor shall remove existing blind flanges and connect to the existing flanges at the existing wall piping sections.
5. Contractor shall isolate Filter Basin during installation of the proposed Filters and Basin Piping connections. One Filter shall remain in service at all times during Filter Disk and Backwash Piping installation.

NO.	DATE	REVISIONS	APP.

WILBARGER CREEK M.U.D. No. 2
TRAVIS COUNTY, TEXAS

WASTEWATER TREATMENT PLANT
EXPANSION TO 1.5 MGD

TERTIARY FILTER PLAN – SHEET 1 OF 2

QUIDDITY
Texas Board of Professional Engineers and Land Surveyors Reg. No. F-23290
912 South Capital of Texas Hwy, Suite 300 • Austin, TX 78746 • 512.441.9493

SCALE: 1/2" = 1'-0" DGN. BY: ZAC
DATE: MARCH 2026 DWN. BY: CCONSOLACION
JOB NO. 0A651-0021-02 DWG. NO.
SUBMITTED: SURV. BY:
F.B. NO.

STATE OF TEXAS
ZACHARY A. COOPER
156249
LICENSED PROFESSIONAL ENGINEER
3/10/26

7-M-3
SHEET NO. 81 OF 230

C:\Users\DRK\DC\ACCDocs\Quiddity – Water–\0A651-0021-02 _ WILBARGER WWTP EXP. 1.5 MGD\Project Files\PLANS\MECH-A7.dwg, Mar 09, 2026 – 3:52pm, DRK

ORIGINAL SCALE IN INCHES FOR REDUCED PLANS

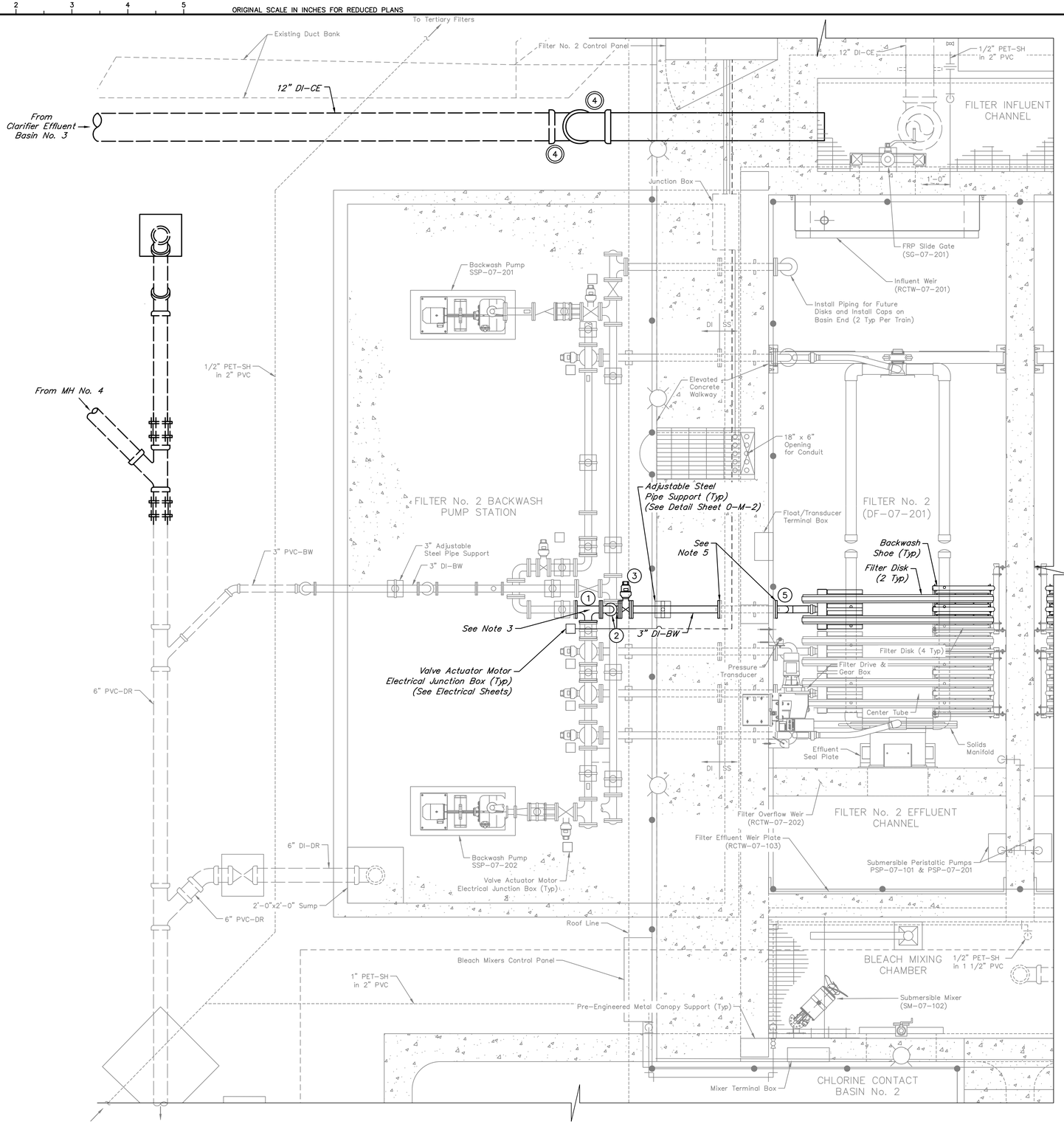

VALVES, FITTINGS, AND ACCESSORIES SCHEDULES

No.	DESCRIPTION
1	3"x3" Tee, FJ
2	3" 90° Bend, FJ
3	3" Ball Valve w/ Electric Actuator, FJ (BV-07-217)
4	12" 90° Bend, MJ
5	3" 90° Bend
◎	Indicates Restrained Valve or Fitting.

0 .5 1 2 4 6
SCALE: 1/2" = 1'

NOTES:

1. Mount all small diameter piping to walls with stainless steel unistrut & stainless steel hardware. The maximum distance between supports shall be 4'-0".
2. Contractor shall furnish & install isolation kits at SS/DI interface for 3" Backwash piping.
3. Existing 3" 90° bend to be removed and replaced with 3"x3" Tee, FJ.
4. Contractor shall remove existing blind flanges and connect to the existing flanges at the existing wall piping sections.
5. Contractor shall isolate Filter Basin during installation of the proposed Filters and Basin Piping connections. One Filter shall remain in service at all times during Filter Disk and Backwash Piping installation.

NO.	DATE	REVISIONS	APP.

WILBARGER CREEK M.U.D. No. 2
TRAVIS COUNTY, TEXAS

WASTEWATER TREATMENT PLANT
EXPANSION TO 1.5 MGD

TERTIARY FILTER PLAN – SHEET 2 OF 2

QUIDDITY
Texas Board of Professional Engineers and Land Surveyors Reg. No. F-23290
912 South Capital of Texas Hwy, Suite 300 • Austin, TX 78746 • 512.441.9493

SCALE:	1/2" = 1'-0"	DGN. BY:	ZAC
DATE:	MARCH 2026	DWN. BY:	CCONSOLACION
JOB NO.	0A651-0021-02	DWG. NO.	
SUBMITTED:		SURV. BY:	
		F.B. NO.	

STATE OF TEXAS
ZACHARY A. COOPER
156249
LICENSED PROFESSIONAL ENGINEER
3/10/26

7-M-4
SHEET NO. 82 OF 230

C:\Users\DRK\DC\ACCDocs\Quiddity – Water–\0A651-0021-02 _ WILBARGER WWTP EXP. 1.5 MGD\Project Files\PLANS\MECH-A7.dwg, Mar 09, 2026 – 3:54pm, DRK

0 1 2 3 4 5 ORIGINAL SCALE IN INCHES FOR REDUCED PLANS

0 1 2 3 6
SCALE: 3/8"=1'

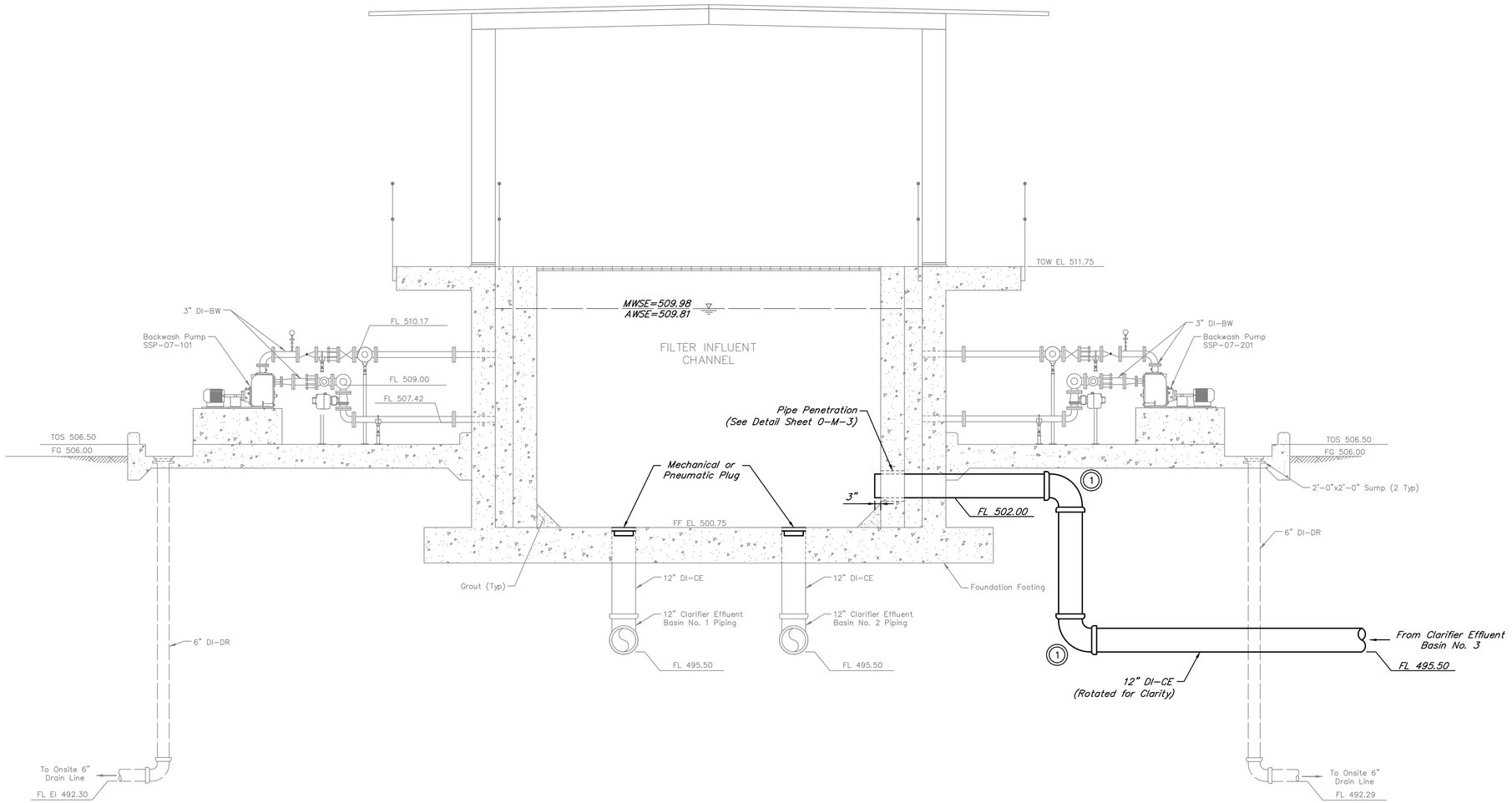

A / 7-M-2 TERTIARY FILTER BASIN SECTION
SCALE: 3/8"=1'-0"

VALVES, FITTINGS, AND ACCESSORIES SCHEDULE	
No.	DESCRIPTION
1	12" 90° Bend, MJ

◎ Indicates Restrained Valve or Fitting.

NOTES:

1. Mount all small diameter piping to walls with stainless steel unistrut & stainless steel hardware. The maximum distance between supports shall be 4'-0".

NO.	DATE	REVISIONS	APP.

WILBARGER CREEK M.U.D. No. 2
TRAVIS COUNTY, TEXAS

WASTEWATER TREATMENT PLANT EXPANSION TO 1.5 MGD

TERTIARY FILTER SECTIONS – SHEET 1 OF 2

QUIDDITY
Texas Board of Professional Engineers and Land Surveyors Reg. No. F-23290
912 South Capital of Texas Hwy, Suite 300 • Austin, TX 78746 • 512.441.9493

SCALE: 3/8" = 1'-0" DGN. BY: ZAC
DATE: FEBRUARY 2026 DWN. BY: SSOMERS
JOB NO. 0A651-0021-02 DWG. NO.
SUBMITTED: SURV. BY:
F.B. NO.

STATE OF TEXAS
ZACHARY A. COOPER
156249
LICENSED PROFESSIONAL ENGINEER
3/10/26

7-M-5
SHEET NO. 83 OF 230

C:\Users\jpatton\DC\ACCDocs\Quiddity – Water–\0A651-0021-02 _ WILBARGER WWTP EXP. 1.5 MGD\Project Files\PLANS\MECH-A7-sections.dwg, Feb 20, 2026 – 9:19am, ssomers

ORIGINAL SCALE IN INCHES FOR REDUCED PLANS

0 1 2 3 4 5

SCALE: 3/8"=1'

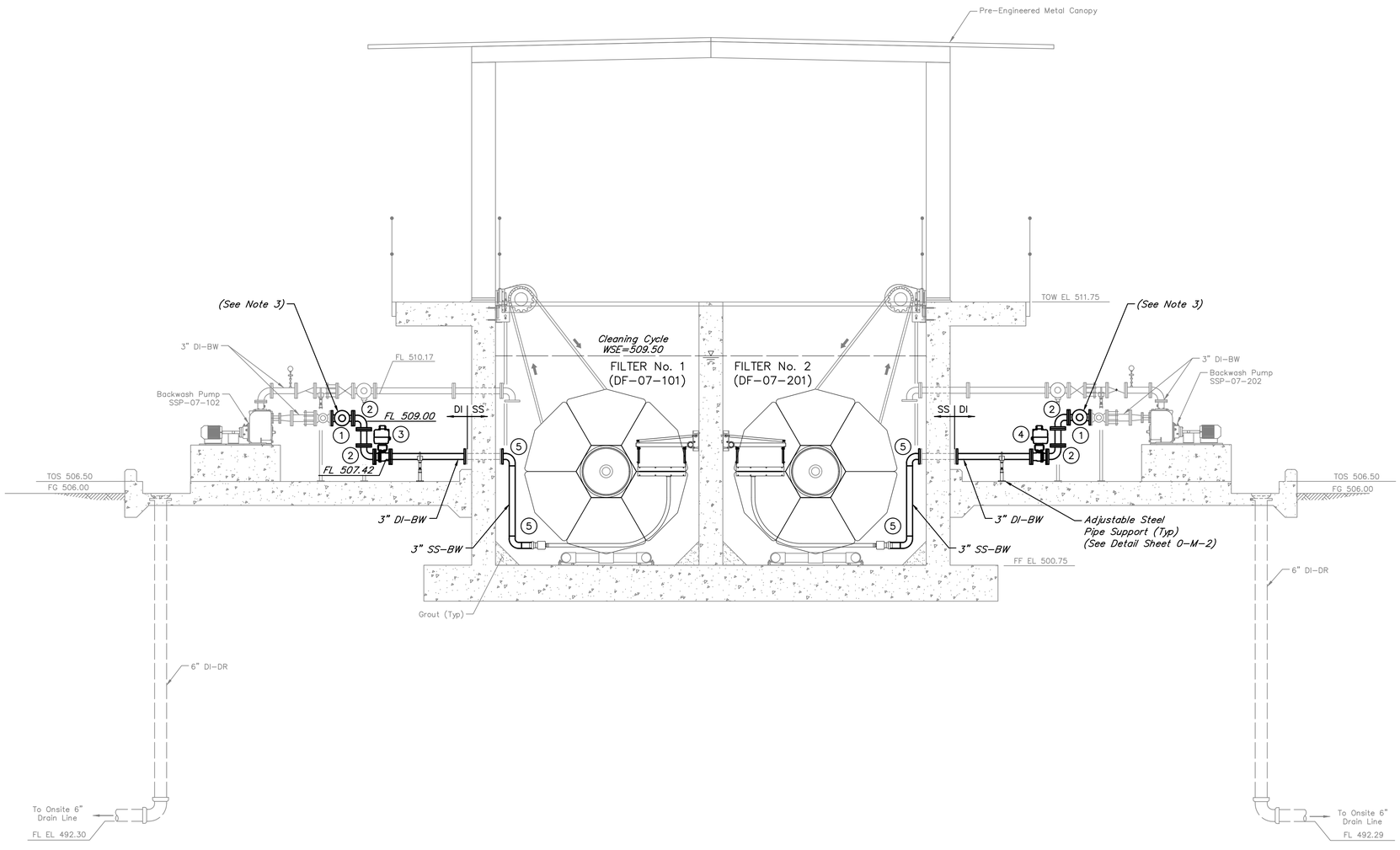

B
7-M-2

TERTIARY FILTER BASIN SECTION

SCALE: 3/8"=1'-0"

VALVES, FITTINGS, AND ACCESSORIES SCHEDULE	
No.	DESCRIPTION
1	3"x3" Tee, FJ
2	3" 90° Bend, FJ
3	3" Ball Valve w/Electric Actuator, FJ (BV-07-117)
4	3" Ball Valve w/Electric Actuator, FJ (BV-07-217)
5	3" 90° Bend

NOTES:

1. Mount all small diameter piping to walls with stainless steel unistrut & stainless steel hardware. The maximum distance between supports shall be 4'-0".
2. Contractor shall furnish & install isolation kits SS/DI interface for 3" Backwash piping.
3. Existing 3" 90 bend to be removed and replaced with a 3" x 3" Tee, FJ.
4. One filter shall remain in service at all times during filter disk and backwash piping installation.

NO.	DATE	REVISIONS	APP.

WILBARGER CREEK M.U.D. No. 2
TRAVIS COUNTY, TEXAS

WASTEWATER TREATMENT PLANT
EXPANSION TO 1.5 MGD

TERTIARY FILTER SECTIONS
– SHEET 2 OF 2

QUIDDITY
Texas Board of Professional Engineers and Land Surveyors Reg. No. F-23290
912 South Capital of Texas Hwy, Suite 300 • Austin, TX 78746 • 512.441.9493

SCALE:	3/8" = 1'-0"	DGN. BY:	ZAC
DATE:	MARCH 2026	DWN. BY:	SSOMERS
JOB NO.	0A651-0021-02	DWG. NO.	
SUBMITTED:		SURV. BY:	
		F.B. NO.	

STATE OF TEXAS
ZACHARY A. COOPER
156249
LICENSED PROFESSIONAL ENGINEER
3/10/26

7-M-6
SHEET NO. 84 OF 230

C:\Users\DRK\DC\ACCDocs\Quiddity – Water–\0A651-0021-02 _ WILBARGER WWTP EXP. 1.5 MGD\Project Files\PLANS\MECH-A7-sections.dwg, Mar 09, 2026 – 3:59pm, DRK

0 1 2 3 4 5 ORIGINAL SCALE IN INCHES FOR REDUCED PLANS

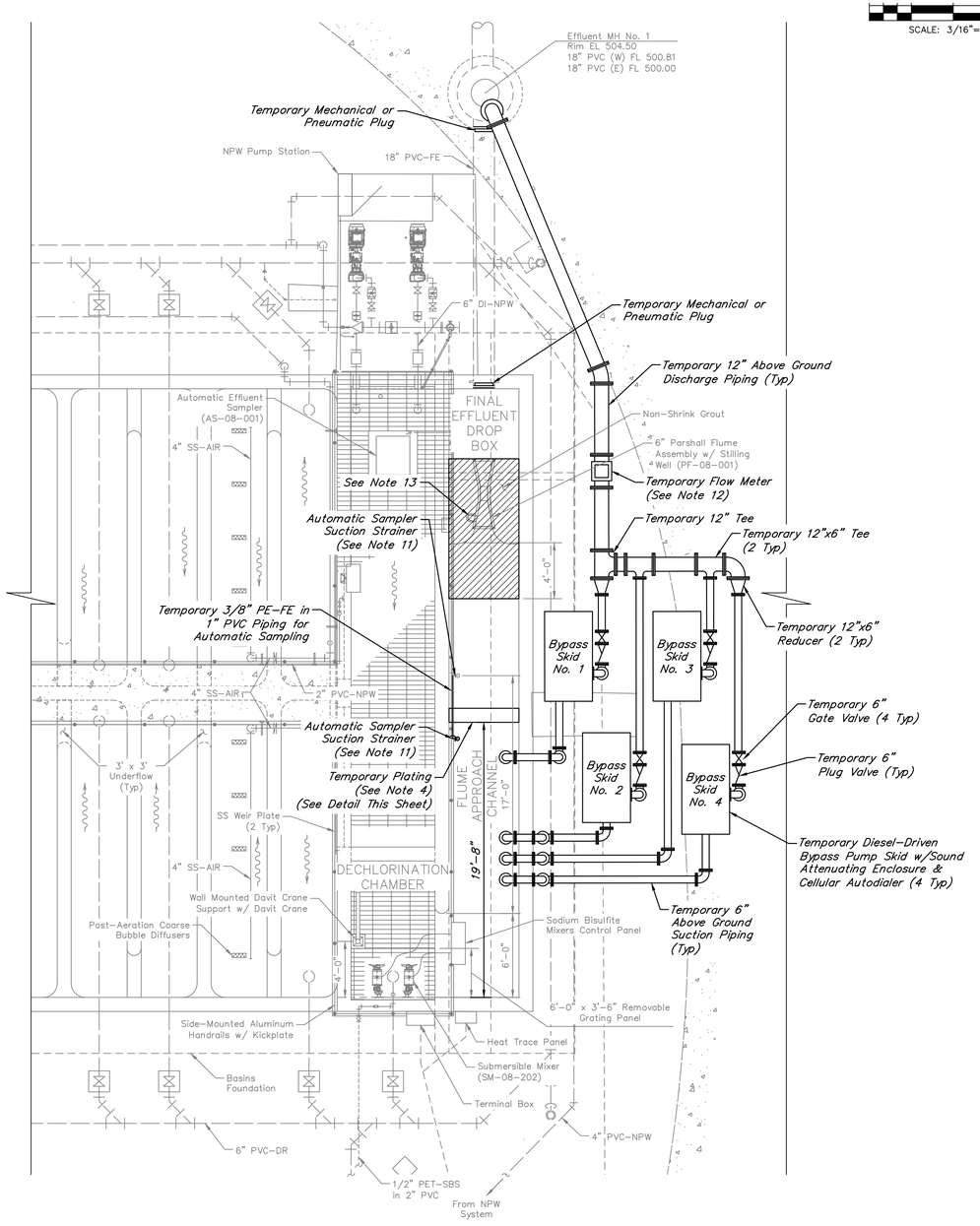

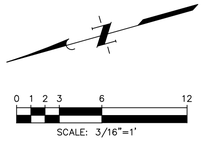

LEGEND:

TO BE DEMOLISHED

NOTES:

1. Contractor is responsible for coordination with Operator and Engineer 14 days prior to commencement of bypass operations.
2. Contractor shall assume all responsibility for providing adequate system monitoring during bypass implementation, including all control monitoring, flow monitoring, bypass setup, operation, and spills (no separate pay). Bypass pumping shall include delivery, setup, means of power for pumps and controls, and removal for the duration of the required bypass. The bypass system shall have the following duty conditions:

   Bypass Skid No. 1 & No. 2: 348 GPM @ 5' TDH
   Bypass Skid No. 3 & No. 4: 695 GPM @ 11' TDH

   Bypass Skid No. 4 shall operate as a standby.
3. Contractor shall install temporary plugs at existing Effluent Manhole No. 1 downstream of the chlorine contact basin and at the effluent drop box.
4. Contractor shall install post-installed anchored plate in the flume approach channel as shown in the plans. Secure plate to all sides of the channel with a watertight seal to ensure effluent flows do not enter the vicinity of the flume during flume replacement construction. Top of plate shall have an elevation of 505.75 at minimum. Contractor shall coordinate with the Operator to shutdown the basin for 4 hours at maximum during plate installation. Plate shall be removed following flume installation and completion of bypass operations.
5. Contractor shall secure all bypass pumping equipment and associated structures as at all times.
6. Contractor is responsible for leaks and cleanup related to the bypass system at no additional cost to the owner.
7. Contractor to open existing manhole and install a temporary wooden lid with holes cut out for the bypass suction piping.
8. Contractor shall provide required hard piping, valves, and supports for proper bypass operations. Vertical suction and discharge piping installed at the chlorine contact basin and manhole lid must be hard piping such as HDPE. Horizontal piping may be hard piping or hoses. All piping must have restrained joints.
9. Temporary piping shall be secured to the existing chlorine contact basin structure.
10. **Demolition of existing 6" parshall flume and associated grouting shall only commence after bypass system is installed and operational and has been tested and in service for a minimum 7 calendar days. Contractor to ensure SCADA system setup is complete before commencing bypass operations. Contractor shall demolish existing flume and non-shrink grout. Existing flow measurement device for the parshall flume shall be removed, stored per Manufacturer's instructions, and re-used after proposed 12" flume is installed.**
11. Existing automatic sampler suction strainer to be shifted away from the proposed flume and reconnected as shown in plans prior to bypassing. Contractor to provide piping, supports, and fittings as required to shift and reconnect the sampler.
12. Temporary flow meter to be installed on temporary bypass piping for use during bypass operations. Flow meter shall be placed so as to have 5 pipe diameters (60") upstream and 2 pipe diameters (24") of separation from proposed pipe fittings. Contractor to run temporary conduits to flow meter during bypassing to connect to Panel CP-11-001 at the Chemical Area for flow meter operation and communication with SCADA.
13. Contractor shall salvage existing level instruments during flume demolition to be reinstalled with proposed flume.
14. Bypass discharge piping shall sweep in smooth and provide smooth discharge flow into the receiving waters. Discharge flows shall not splash or drop into receiving waters.
15. Contractor shall install bypass equipment as necessary to maintain complete access to stairs.

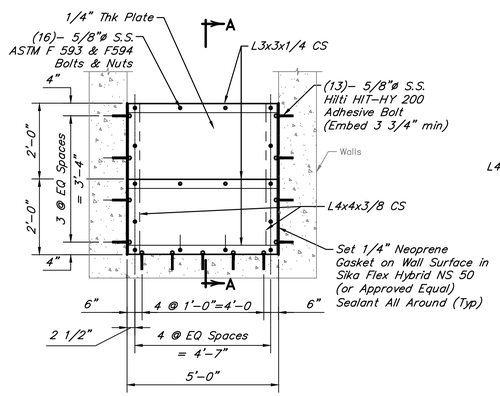

TEMPORARY PLATING DETAIL
SCALE: 1/2"=1'-0"

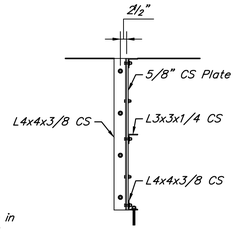

SECTION "A-A"
SCALE: 1/2"=1'-0"

For Temporary Plating Structural Detail Only:

STATE OF TEXAS
AHMAD DANESHVAR
132679
LICENSED PROFESSIONAL ENGINEER
3/10/2026

NO.	DATE	REVISIONS	APP.

WILBARGER CREEK M.U.D. No. 2
TRAVIS COUNTY, TEXAS

WASTEWATER TREATMENT PLANT EXPANSION TO 1.5 MGD

CHLORINE CONTACT BASIN DEMOLITION & BYPASS PLAN

QUIDDITY
Texas Board of Professional Engineers and Land Surveyors Reg. No. F-23290
912 South Capital of Texas Hwy, Suite 300 • Austin, TX 78746 • 512.441.9493

SCALE:	3/16" = 1'-0"	DGN. BY:	ZAC
DATE:	FEBRUARY 2026	DWN. BY:	JSTRUHAR
JOB NO.	0A651-0021-02	DWG. NO.	
SUBMITTED:		SURV. BY:	
		F.B. NO.	

STATE OF TEXAS
ZACHARY A. COOPER
156249
LICENSED PROFESSIONAL ENGINEER
3/10/26

8-M-1
SHEET NO. 85 OF 230

C:\Users\JAS\DC\ACCDocs\Quiddity\0A651-0021-02 _ WILBARGER WWTP EXP. 1.5 MGD\Project Files\PLANS\MECH-A8.dwg, Feb 06, 2026 - 11:53am, JAS

0 1 2 3 4 5 ORIGINAL SCALE IN INCHES FOR REDUCED PLANS

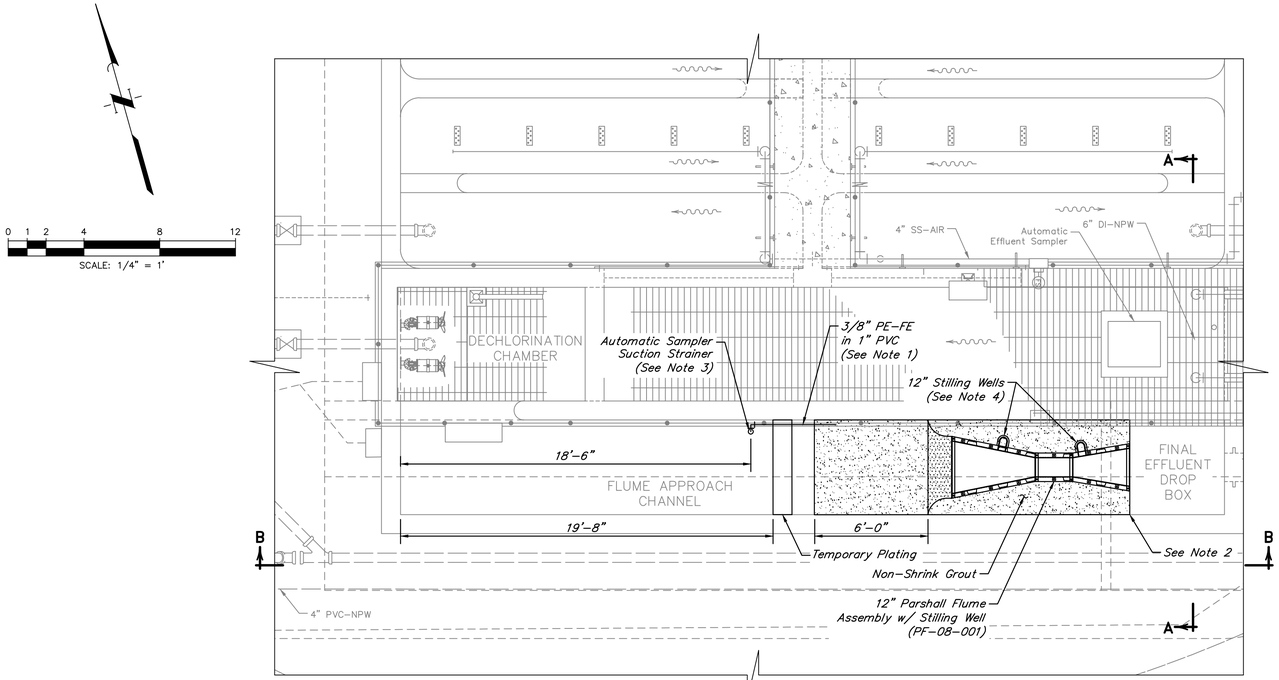

CHLORINE CONTACT BASIN PLAN

SCALE: 1/4"=1'-0"

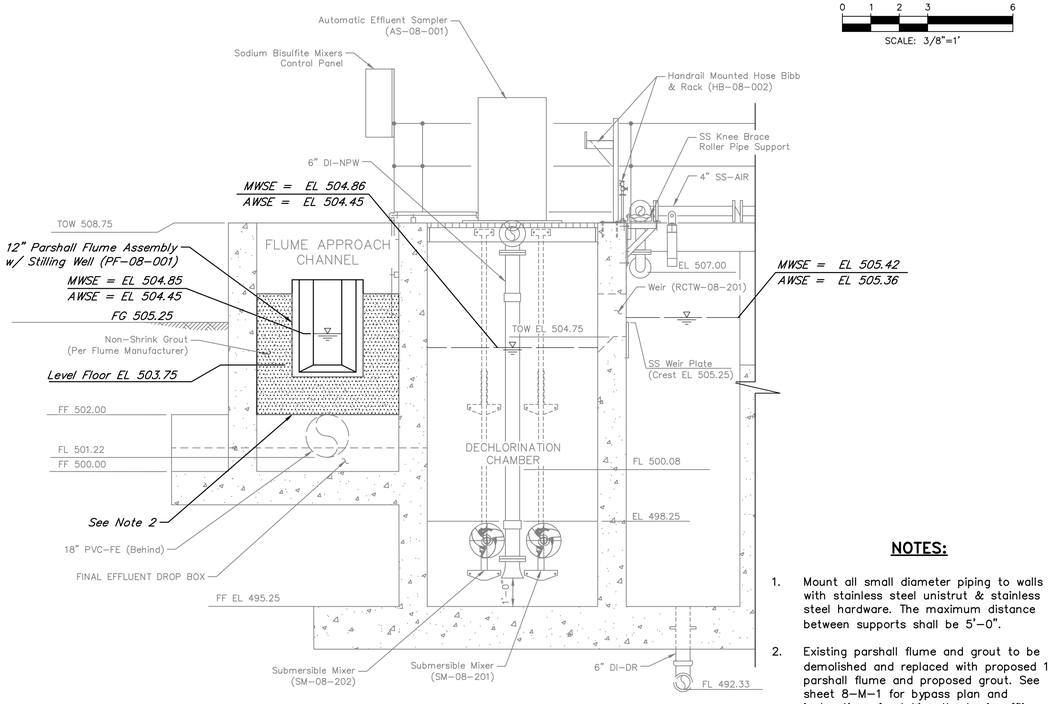

CHLORINE CONTACT BASIN SECTION "A-A"

SCALE: 3/8"=1'-0"

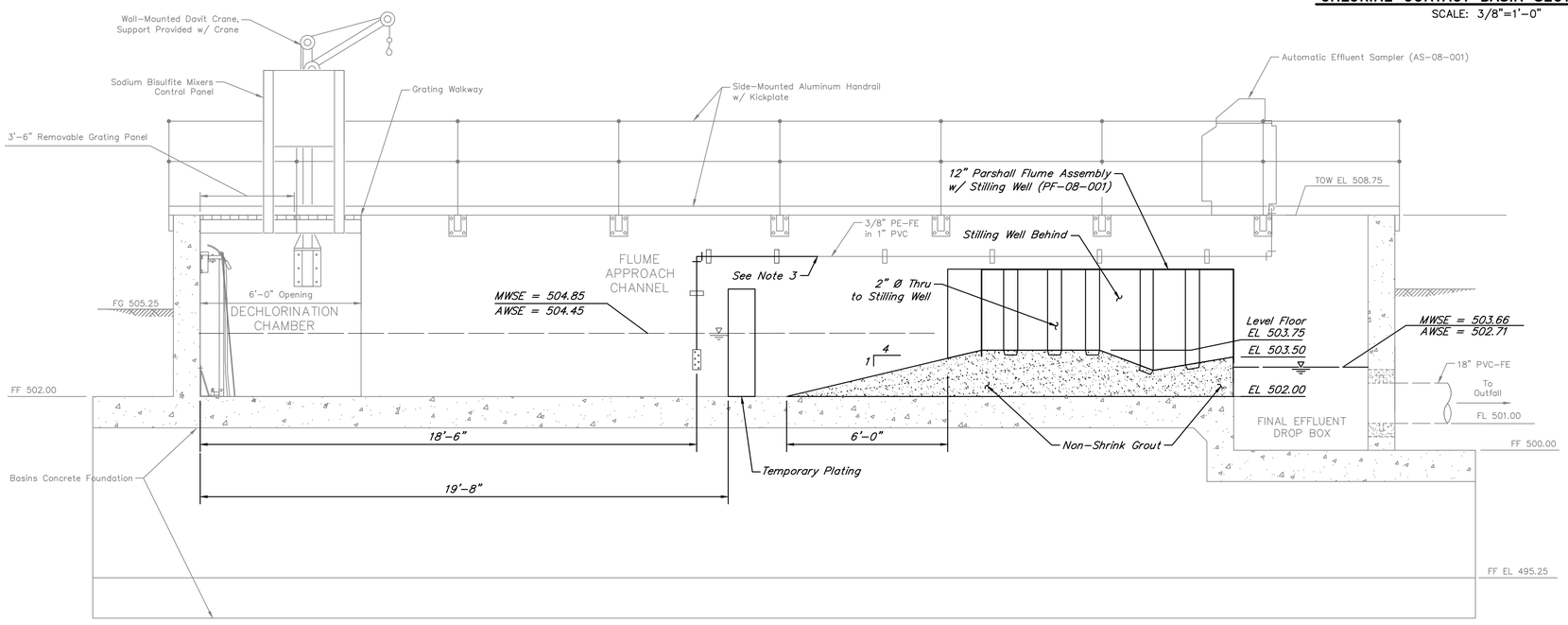

CHLORINE CONTACT BASIN SECTION "B-B"

SCALE: 3/8"=1'-0"

NOTES:

1. Mount all small diameter piping to walls with stainless steel unistrut & stainless steel hardware. The maximum distance between supports shall be 5'-0".
2. Existing parshall flume and grout to be demolished and replaced with proposed 12" parshall flume and proposed grout. See sheet 8-M-1 for bypass plan and instructions for taking the basin offline during construction.
3. Existing automatic sampler suction strainer to be shifted away from the proposed flume and reconnected as shown in plans prior to bypassing. Contractor to provide piping, supports, and fittings as required to shift and reconnect sampler.
4. Existing level instruments to be salvaged and reused following flume replacement. Contractor to place instruments in proposed stilling wells and restore to functionality once new flume and stilling wells are installed.

NO.	DATE	REVISIONS	APP.

WILBARGER CREEK M.U.D. No. 2
TRAVIS COUNTY, TEXAS

WASTEWATER TREATMENT PLANT EXPANSION TO 1.5 MGD

CHLORINE CONTACT BASIN PLAN & SECTIONS

QUIDDITY
Texas Board of Professional Engineers and Land Surveyors Reg. No. F-23290
912 South Capital of Texas Hwy, Suite 300 • Austin, TX 78746 • 512.441.9493

SCALE:	3/8" = 1'-0"	DGN. BY:	ZAC
DATE:	MARCH 2026	DWN. BY:	JSTRUHAR
JOB NO.	0A651-0021-02	DWG. NO.	
SUBMITTED:		SURV. BY:	
		F.B. NO.	

STATE OF TEXAS
ZACHARY A. COOPER
156249
LICENSED PROFESSIONAL ENGINEER
3/10/26

8-M-2
SHEET NO. 86 OF 230

C:\Users\DRK\DC\ACCDocs\Quiddity - Water-\0A651-0021-02 _ WILBARGER WWTP EXP. 1.5 MGD\Project Files\PLANS\MECH-A8.dwg, Mar 09, 2026 - 4:09pm, DRK

0 1 2 3 4 5 ORIGINAL SCALE IN INCHES FOR REDUCED PLANS

1

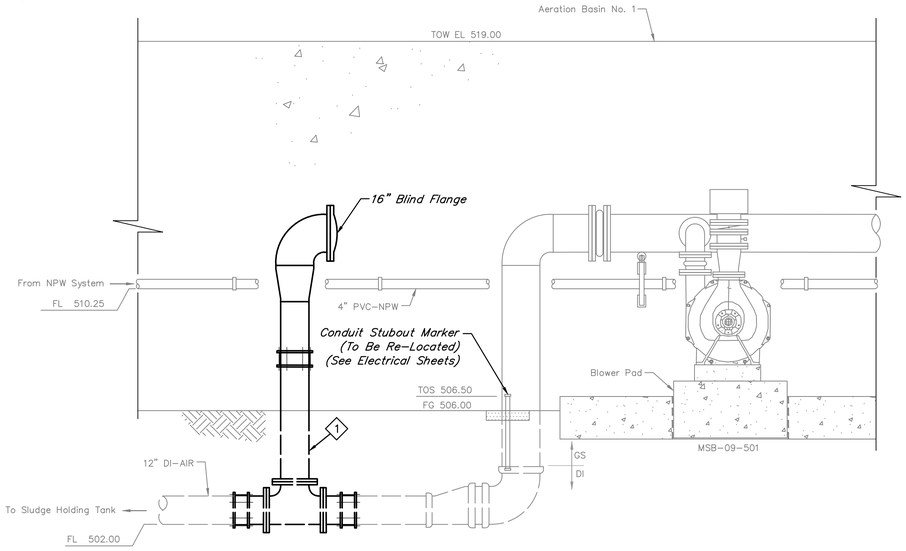

2A

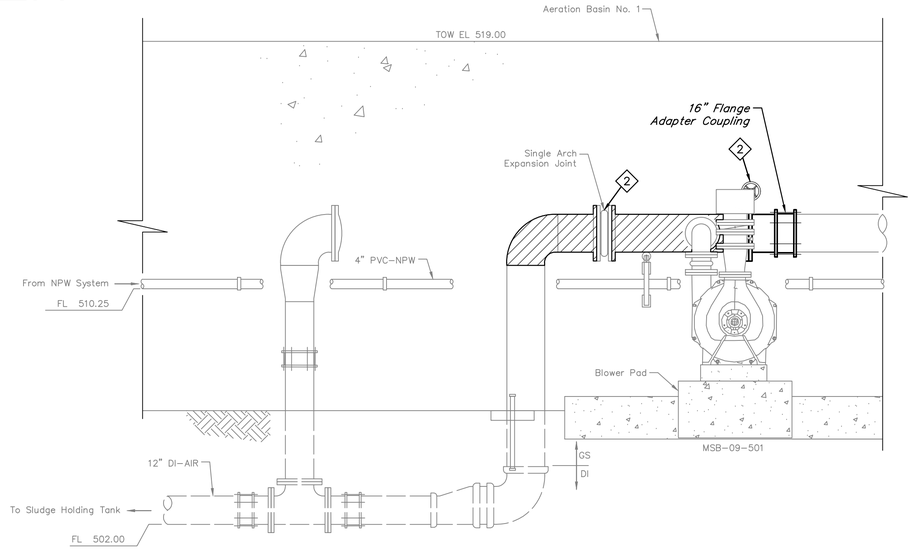

2B

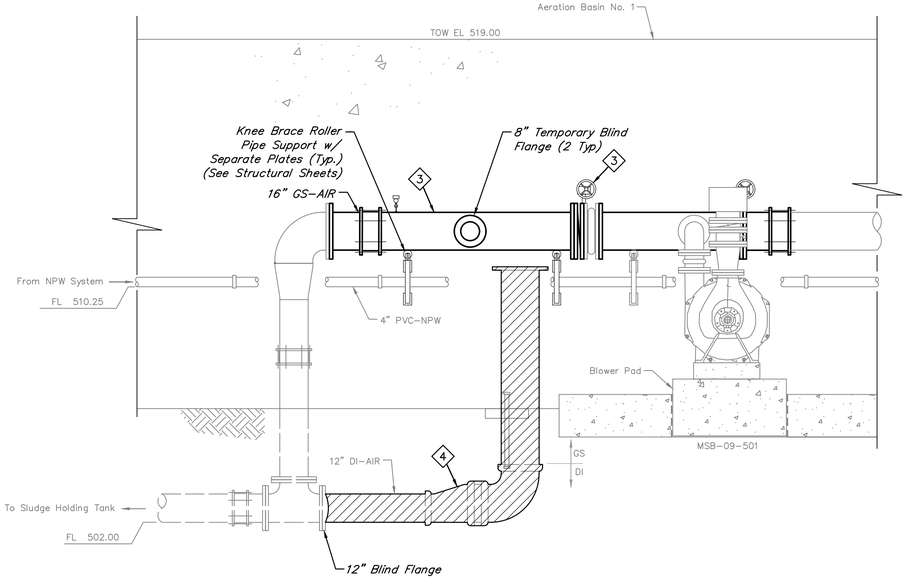

3

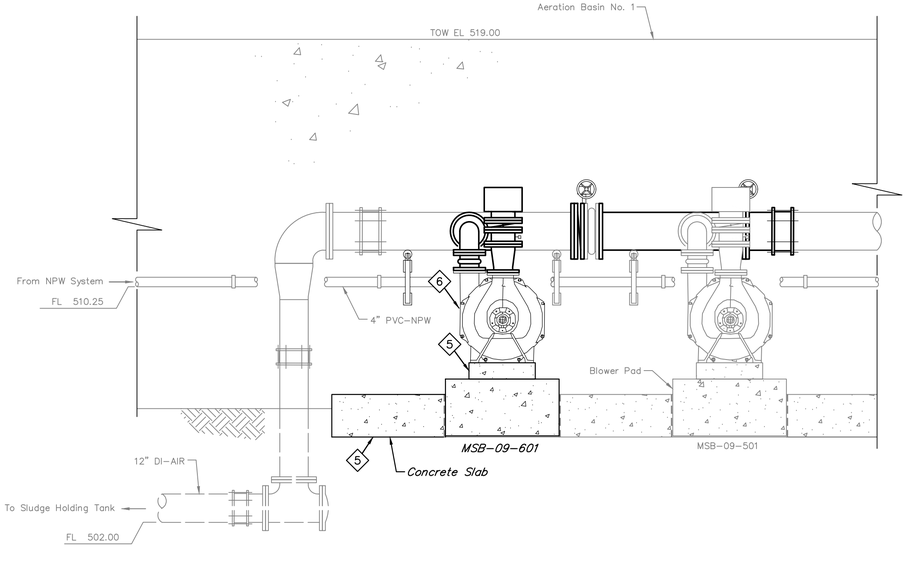

0 1 2 3 6
SCALE: 3/8"=1'

ITEMS OF WORK

No.	DESCRIPTION
1	Install a 12" Tee and tie into existing 12" underground piping. Install 16" vertical piping and 90° bend with a 16" temporary blind flange.
2	Demolish existing 16" Header piping and 90° bend. Store existing single arch expansion joint. Install 16" butterfly valve and flange adapter coupling.
3	Remove 16" temporary blind flange. and install 16" fabricated header piping including 16" butterfly valve and 8" temporary blind flange. Re-install existing single arch expansion joint to fabricated header.
4	Demolish existing 12" underground piping including all fittings. Install a 12" blind flange at the end of the proposed 12" Tee.
5	Construct proposed concrete slab and blower pad.
6	Remove 8" temporary blind flange and install proposed blower, blower header, and inlet piping. Connect 10" blower header pipe to 16" blower header.

NOTES:

1. Short duration shutdowns of the existing blowers may be required to complete portions of the demolition and construction for safety. These shut-downs must be coordinated with the Engineer and Operator at least 72 hours in advance. Shutdowns may not exceed 4 hours at a time.
2. All locations, elevations, and dimensions shown are approximate and are based on record drawings. Contractor is responsible for verifying all locations, elevations, and dimensions necessary for the work.
3. Steps 2A & 2B to occur at the same time. They are shown separately for clarity.

LEGEND:

TO BE DEMOLISHED

NO.	DATE	REVISIONS	APP.

WILBARGER CREEK M.U.D. No. 2
TRAVIS COUNTY, TEXAS

WASTEWATER TREATMENT PLANT
EXPANSION TO 1.5 MGD

BLOWERS DEMOLITION & SEQUENCING PLAN

QUIDDITY
Texas Board of Professional Engineers and Land Surveyors Reg. No. F-23290
912 South Capital of Texas Hwy, Suite 300 • Austin, TX 78746 • 512.441.9493

SCALE:	3/8" = 1'-0"	DGN. BY:	ZCOOPER
DATE:	FEBRUARY 2026	DWN. BY:	MKLENKE
JOB NO.	0A651-0021-02	DWG. NO.	
SUBMITTED:		SURV. BY:	
		F.B. NO.	

STATE OF TEXAS
JORDAN ZYLBERBERG
142350
LICENSED PROFESSIONAL ENGINEER
3/10/26

9-M-1
SHEET NO. 87 OF 230

C:\Users\JAS\DC\ACCDocs\Quiddity\0A651-0021-02 _ WILBARGER WWTP EXP. 1.5 MGD\Project Files\PLANS\MECH 3.dwg, Feb 09, 2026 - 2:56pm, JAS

0 1 2 3 4 5 ORIGINAL SCALE IN INCHES FOR REDUCED PLANS

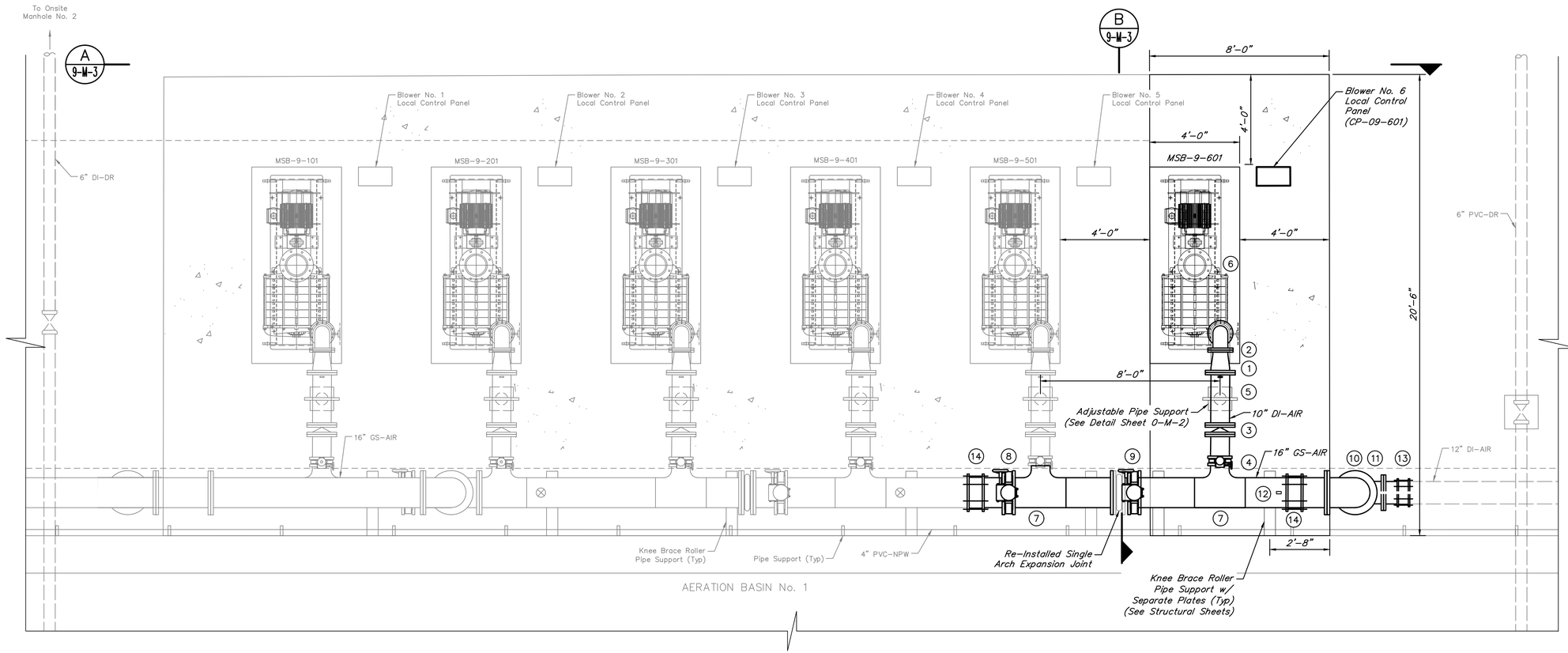

0 1 2 3 6
SCALE: 3/8"=1'

NOTES:

1. All locations, elevations, and dimensions shown are approximate and are based on record drawings. Contractor is responsible for verifying all locations, elevations, and dimensions necessary for the work.

VALVES, FITTINGS, AND ACCESSORIES SCHEDULE

No.	DESCRIPTION
1	8"x10" Concentric Reducer, FJ
2	8" 90° Bend, FJ
3	10" Double Disk Check Valve (DCV-09-601)
4	10" Butterfly Valve (BFV-09-602)
5	Pressure Indicator, 1/2" Ball Valve, Threaded (BV-09-602)
6	Air Filter, FJ (AF-09-601)
7	16"x12"x16" Tee, FJxFJxPE
8	16" Butterfly Valve (BFV-09-003)
9	16" Butterfly Valve (BFV-09-004)
10	16" 90° Bend, FJxPE
11	12" Tee, FJ
12	Pressure Level Switch w/ 1/2" Ball Valve (See Detail Sheet 0-M-1) (BV-09-003 & PSL-09003)
13	12" Flange Adapter Coupling
14	16" Flange Adapter Coupling

NO.	DATE	REVISIONS	APP.

WILBARGER CREEK M.U.D. No. 2
TRAVIS COUNTY, TEXAS

WASTEWATER TREATMENT PLANT EXPANSION TO 1.5 MGD

BLOWERS PLAN

QUIDDITY
Texas Board of Professional Engineers and Land Surveyors Reg. No. F-23290
912 South Capital of Texas Hwy, Suite 300 • Austin, TX 78746 • 512.441.9493

SCALE: 3/8" = 1'-0" DGN. BY: ZCOOPER
DATE: FEBRUARY 2026 DWN. BY: MKLENKE
JOB NO. 0A651-0021-02 DWG. NO.
SUBMITTED: SURV. BY:
F.B. NO.

STATE OF TEXAS
JORDAN ZYLBERBERG
142350
LICENSED PROFESSIONAL ENGINEER
3/10/26

9-M-2
SHEET NO. 88 OF 230

C:\Users\jpatton\DC\ACCDocs\Quiddity – Water-\0A651-0021-02 _ WILBARGER WWTP EXP. 1.5 MGD\Project Files\PLANS\MECH 3.dwg, Feb 20, 2026 – 9:23am, JAS

0 1 2 3 4 5 ORIGINAL SCALE IN INCHES FOR REDUCED PLANS

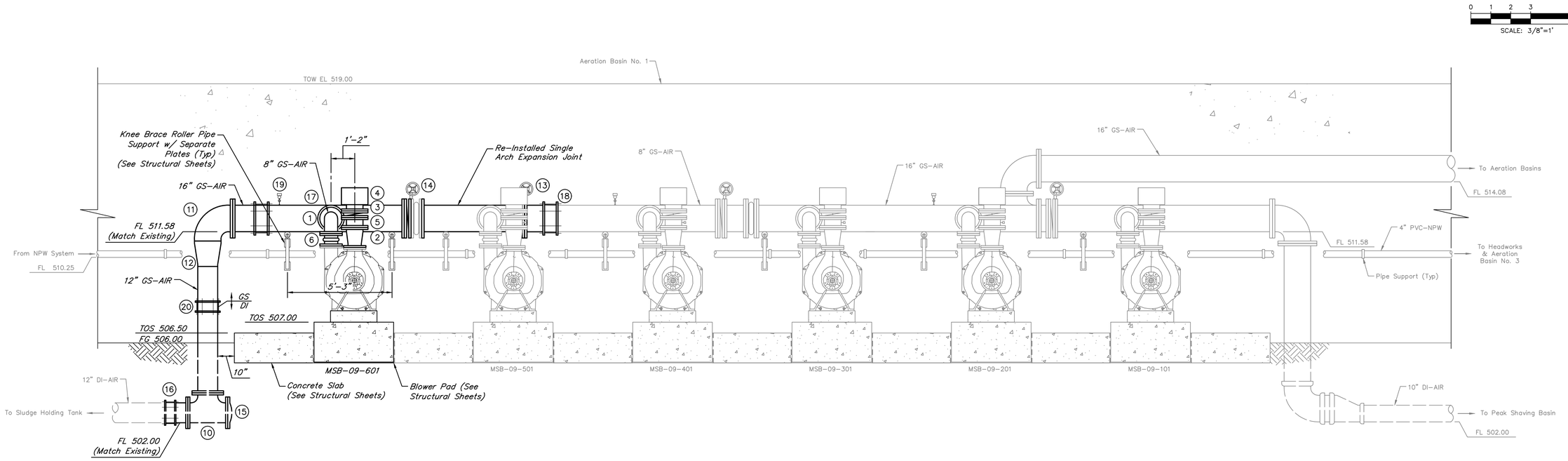

A 9-M-2 **BLOWER SECTION**
SCALE: 3/8"=1'-0"

VALVES, FITTINGS, AND ACCESSORIES SCHEDULE			
No.	DESCRIPTION	No.	DESCRIPTION
1	8" 90° Bend, FJ	11	16" 90° Bend, FJxPE
2	10"x8" Concentric Reducer, FJ	12	16"x12" Concentric Reducer, PE
3	10" Butterfly Valve (BFV-09-601) (See Note 2)	13	16" Butterfly Valve (BFV-09-003)
4	Air Filter, FJ (AF-09-601)	14	16" Butterfly Valve (BFV-09-004)
5	Pressure Indicator, 1/2" Ball Valve, Threaded (BV-09-601)	15	12" Blind Flange
6	8" Single Arch Expansion Joint, FJ (SAE-09-601)	16	12" Flange Adapter Coupling
7	Pressure Indicator w/ 1/2" Ball Valve, TJ (See Detail Sheet 0-M-1) (BV-09-602 & PI-09602)	17	16"x12"x16" Tee, PExFJxPE
8	10" Double Disk Check Valve (DCV-09-601)	18	16" Flange Adapter Coupling
9	10" Butterfly Valve (BFV-09-602)	19	Pressure Level Switch w/ 1/2" Ball Valve (See Detail Sheet 0-M-1) (BV-09-003 & PSL-09003)
10	12" Tee, PE	20	12" Sleeve Coupling

◎ Indicates Restrained Valve or Fitting.

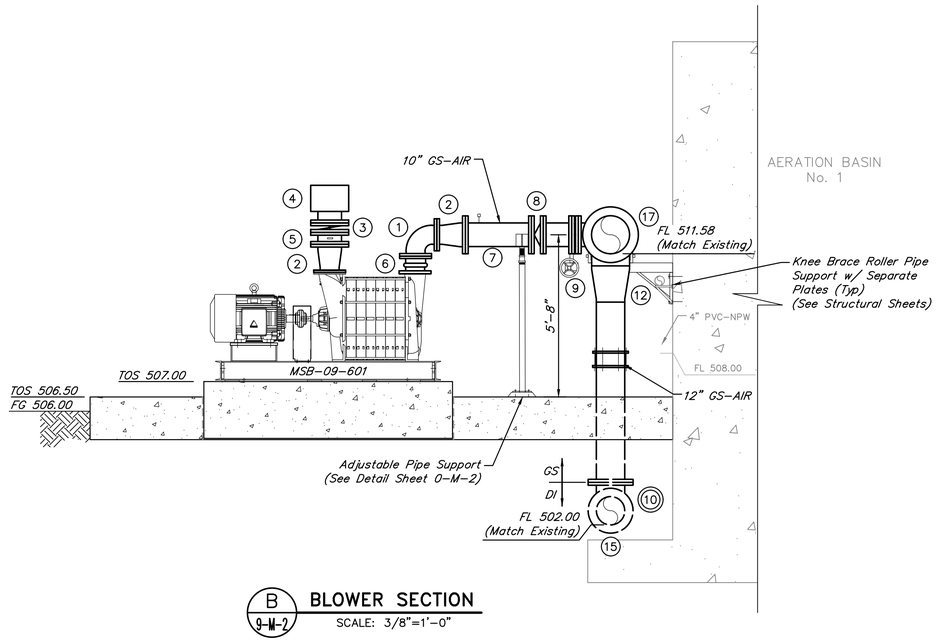

B 9-M-2 **BLOWER SECTION**
SCALE: 3/8"=1'-0"

NOTES:

1. All locations, elevations, and dimensions shown are approximate and are based on record drawings. Contractor is responsible for verifying all locations, elevations, and dimensions necessary for the work.
2. Contractor to install butterfly valve with the gear operator facing the same side as the local control panel.

NO.	DATE	REVISIONS	APP.

WILBARGER CREEK M.U.D. No. 2
TRAVIS COUNTY, TEXAS

WASTEWATER TREATMENT PLANT EXPANSION TO 1.5 MGD

BLOWERS SECTIONS

QUIDDITY
Texas Board of Professional Engineers and Land Surveyors Reg. No. F-23290
912 South Capital of Texas Hwy, Suite 300 • Austin, TX 78746 • 512.441.9493

SCALE:	3/8" = 1'-0"	DGN. BY:	ZCOOPER
DATE:	FEBRUARY 2026	DWN. BY:	MKLENKE
JOB NO.	0A651-0021-02	DWG. NO.	
SUBMITTED:		SURV. BY:	
		F.B. NO.	

STATE OF TEXAS
JORDAN ZYLBERBERG
142350
LICENSED PROFESSIONAL ENGINEER
3/10/26

9-M-3
SHEET NO. 89 OF 230

C:\Users\cgular\DC\ACCDocs\Quiddity - Water-\0A651-0021-02 _ WILBARGER WWTP EXP. 1.5 MGD\Project Files\PLANS\MECH 3.dwg, Feb 05, 2026 - 2:29pm, cgular

0 1 2 3 4 5 ORIGINAL SCALE IN INCHES FOR REDUCED PLANS

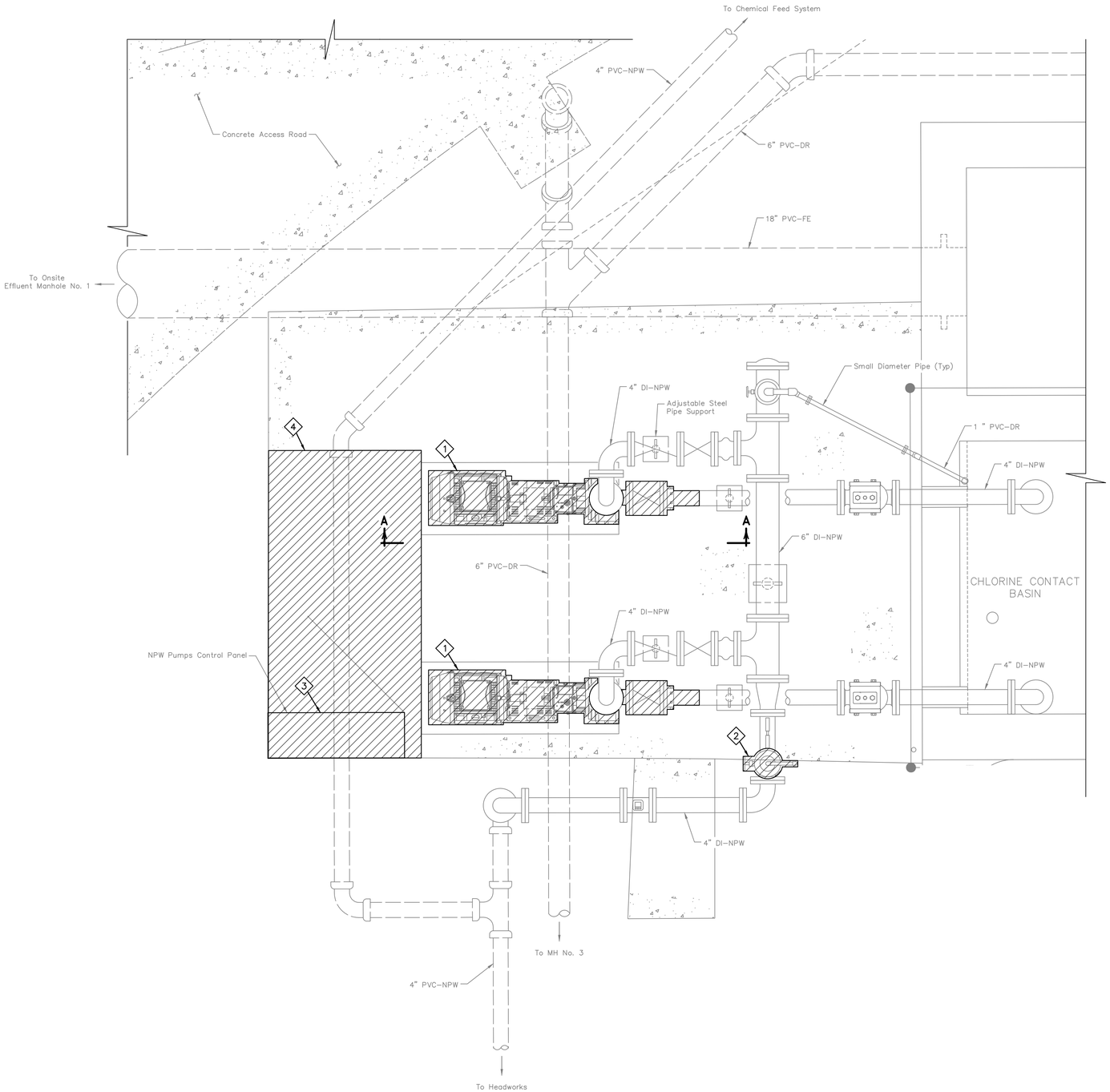

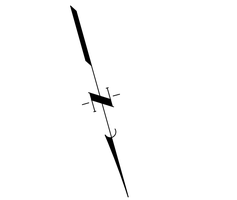

ITEMS OF WORK	
No.	DESCRIPTION
1	Demolish and replace two (2) existing NPW pumps, associated suction valve and suction/discharge piping as shown in the plan and section views, and existing winterization structures. The existing NPW pump station shall remain online during this process. Contractor shall verify pipe connections with approved pump submittal and modify pump pad concrete as necessary to ensure properly aligned tie–in. See Construction Sequencing notes on Sheet 10–M–2 and see electrical sheets for details prior to demolition.
2	Existing NPW blow off pipe and valve shall be demolished and replaced with a proposed 2" PRV and 2" ball valve. Contractor shall install drain piping to connect from proposed PRV to chlorine contact basin with fittings as required. Contractor to coordinate with plant Operators to minimize system downtime during construction.
3	Existing NPW Pumps Control Panel shall be demolished. See Construction Sequencing notes on Sheet 10–M–2 and see Electrical Sheets for details prior to demolition.
4	Demolish existing NPW pad section as needed to make proposed electrical conduit connection for the proposed pumps. See Construction Sequencing notes on Sheet 10–M–2 and see electrical sheets for details prior to demolition. See Structural Sheets for details on cutting of the existing reinforcement during demolition.

LEGEND:

TO BE DEMOLISHED

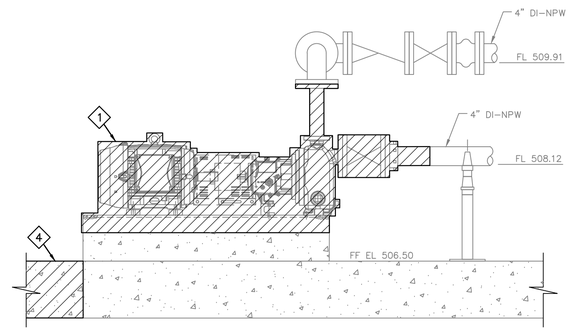

SECTION "A–A"
SCALE: 3/4"=1'–0"

NO.	DATE	REVISIONS	APP.

WILBARGER CREEK M.U.D. No. 2
TRAVIS COUNTY, TEXAS

WASTEWATER TREATMENT PLANT
EXPANSION TO 1.5 MGD

NPW SYSTEM DEMOLITION PLAN

QUIDDITY
Texas Board of Professional Engineers and Land Surveyors Reg. No. F-23290
912 South Capital of Texas Hwy, Suite 300 • Austin, TX 78746 • 512.441.9493

SCALE:	3/4"=1'–0"	DGN. BY:	ZCOOPER
DATE:	FEBRUARY 2026	DWN. BY:	MKLENKE
JOB NO.	0A651–0021–02	DWG. NO.	
SUBMITTED:		SURV. BY:	
		F.B. NO.	

STATE OF TEXAS
ZACHARY A. COOPER
156249
LICENSED PROFESSIONAL ENGINEER
3/10/26

10–M–1
SHEET NO. 90 OF 230

C:\Users\ssomers\DC\ACCDocs\Quiddity – Water–\0A651–0021–02 _ WILBARGER WWTP EXP. 1.5 MGD\Project Files\PLANS\MECH 3.dwg, Feb 09, 2026 – 8:58am, JAS

0 1 2 3 4 5 ORIGINAL SCALE IN INCHES FOR REDUCED PLANS

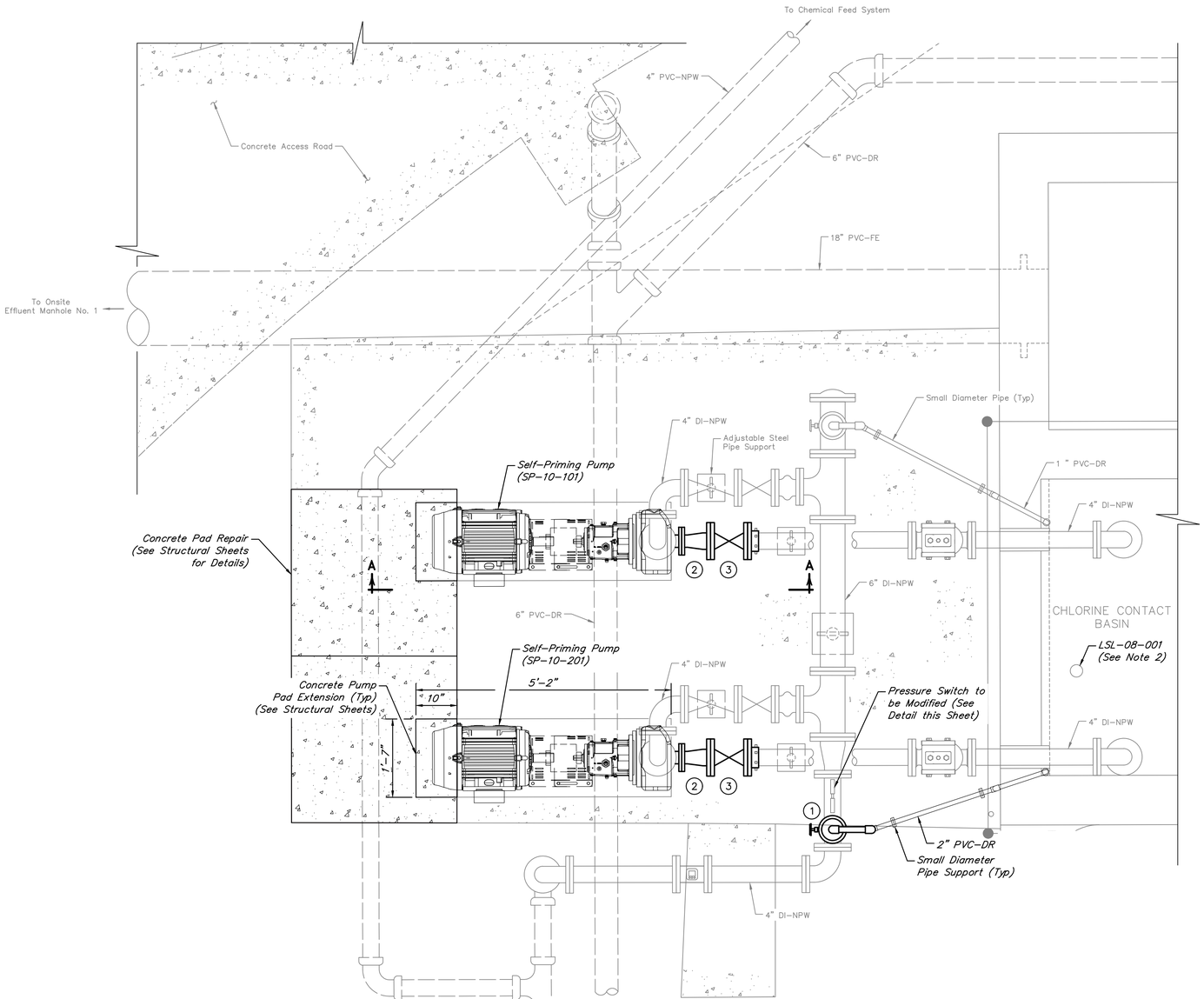

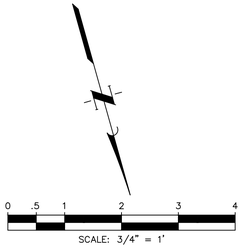

VALVES, FITTINGS, AND ACCESSORIES SCHEDULE	
No.	DESCRIPTION
1	2" Pressure Relief Valve & 2" Ball Valve Threaded (PRV-10-001 & BV-10-004)
2	3"x4" Reducer, FJ
3	4" Gate Valve, FJ

NOTES:

1. Contractor shall cut and install threaded tee and Pressure Indicating Transmitter (PIT-10-001) to existing Pressure Switch setup. See P&ID for instrumentation connection details.
2. Existing LSL-08-001 shall be programmed with a low level limit of 498.62. See Electrical Sheets for control panel details and Sheet 10-I-1 for NPW System P&ID.
3. Contractor shall field fit the piping to connect with the existing piping. Additional adjustments to the housekeeping pad and piping/fittings may be necessary based on submitted equipment.

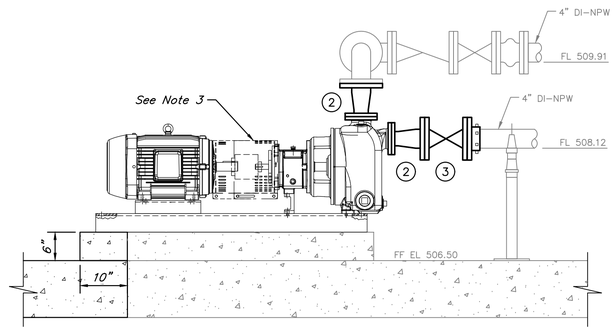

SECTION "A-A"
SCALE: 3/4"=1'-0"

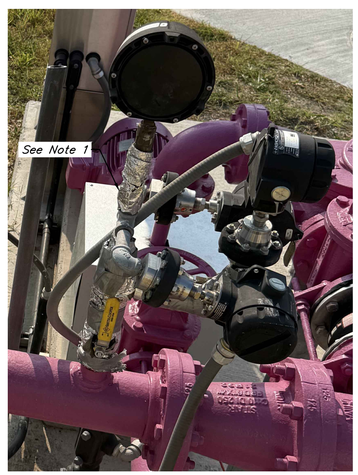

PRESSURE SWITCH DETAIL
SCALE: NTS

CONSTRUCTION SEQUENCING NOTES:

1. The NPW pump station shall remain online during demolition and construction, with one pump always in service. The Contractor shall minimize system downtime as necessary during cutback and installation of proposed NPW piping. The maximum allowable downtime is 4 hours.
2. The contractor shall run the proposed conduits from the new NPW panel location to the NPW area underground pull boxes as detailed in the electrical sheets.
3. The proposed NPW control panel shall be installed in the dewatering building and operational before any work commences in this area. See Area 14 electrical sheets for control panel installation details.
4. Upon completion of the NPW Control Panel, the existing NPW pumps shall be replaced one at a time, with SP-10-101 being replaced first. Prior to pump demolition, the Contractor shall close valves upstream of the pump. Following demolition of the first pump, the concrete slab shall be cut back as needed to run conduits from the NPW area underground pull box to the new pump's location. Following conduit installation, the concrete slab shall be replaced, the concrete pedestal extension shall be constructed, and the new pump shall be installed, tested, and put into operation. Contractor shall connect the proposed pump and all existing instruments to the new NPW control panel as detailed in the electrical sheets.
5. Following completion of the work in Construction Sequencing Note 4, SP-10-201 shall be demolished and replaced, following the same sequence of construction as the first pump.
6. Demolition of the existing NPW control panel and associated conduits shall commence concurrently with the demolition and replacement of SP-10-201. Refer to the electrical sheets for all conduit demolition and installation details.

NO.	DATE	REVISIONS	APP.

WILBARGER CREEK M.U.D. No. 2
TRAVIS COUNTY, TEXAS

WASTEWATER TREATMENT PLANT
EXPANSION TO 1.5 MGD

NPW SYSTEM IMPROVEMENTS PLAN

QUIDDITY
Texas Board of Professional Engineers and Land Surveyors Reg. No. F-23290
912 South Capital of Texas Hwy, Suite 300 • Austin, TX 78746 • 512.441.9493

SCALE:	3/4"=1'-0"	DGN. BY:	ZCOOPER
DATE:	MARCH 2026	DWN. BY:	MKLENKE
JOB NO.	0A651-0021-02	DWG. NO.	
SUBMITTED:		SURV. BY:	
		F.B. NO.	

STATE OF TEXAS
ZACHARY A. COOPER
156249
LICENSED PROFESSIONAL ENGINEER
3/10/26

10-M-2
SHEET NO. 91 OF 230

C:\Users\DRK\DC\ACCDocs\Quiddity – Water-\0A651-0021-02 _ WILBARGER WWTP EXP. 1.5 MGD\Project Files\PLANS\MECH 3.dwg, Mar 09, 2026 – 4:57pm, DRK

0 1 2 3 4 5 ORIGINAL SCALE IN INCHES FOR REDUCED PLANS

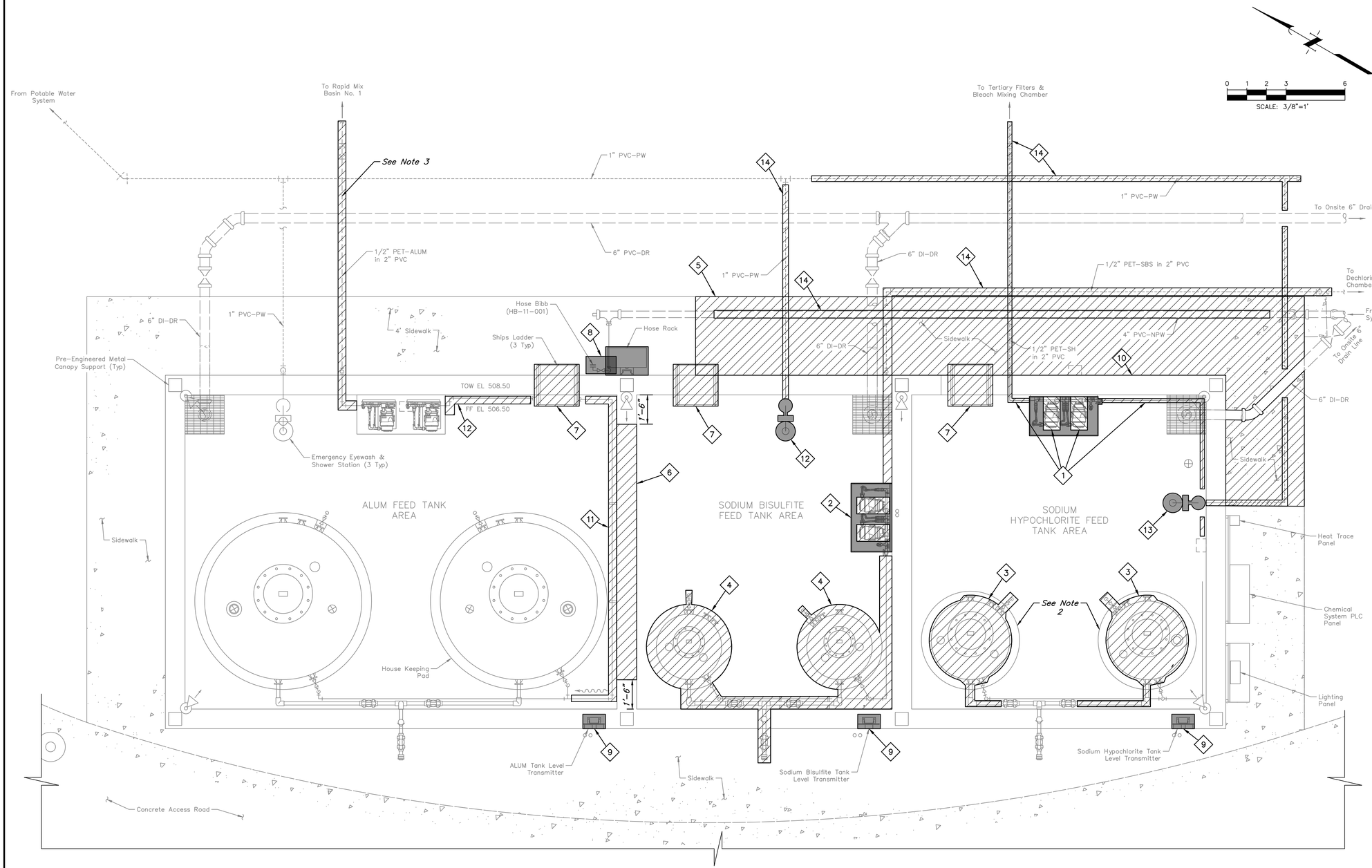

ITEMS OF WORK

No.	DESCRIPTION
1	Existing Sodium Hypochlorite pumps and a portion of the existing suction and discharge piping to be demolished and pump skid to be removed and relocated. See Sheet 11–M–2 for full construction sequencing notes.
2	Existing Sodium Bisulfite pumps to be demolished and pump skid to be removed and re–used in proposed Sodium Bisulfite Feed Area. See Sheet 11–M–2 for full construction sequencing notes.
3	Demolish existing 540 gallon single wall Sodium Hypochlorite tanks including tank piping, fittings, valves, and associated hardware (2 Typ). Tanks shall be demolished one at a time. Demolition of second tank shall not commence untill first tank has been replaced and put in service.
4	Demolish existing 205 gallon single wall sodium bisulfite tanks including all associated above ground piping, fittings, valves, concrete tank pedestals, and all associated hardware (2 Typ). Tanks shall be demolished one at a time. Demolition of second tank shall not commence untill first tank has been replaced and put in service.
5	Demolish existing sidewalk section.
6	Demolish existing 2' tall concrete wall between existing alum feed area and existing sodium bisulfite feed area, leaving a 1'–6" section on each side. Match grade with existing slab FFE.
7	Demolish existing ships ladders, including all associated hardware. Cut and grout cap anchor bolts. Alum area access shall not be removed until proposed access is constrcted. Should temporary access be required, Contractor shall supply said access in accordance with all applicable Federal, State, and local safety regulations.
8	Existing hose rack and hose bibb to be removed and relocated. See Sheet 11–M–2 for additional details.
9	Existing Alum, Sodium Bisulfite, and Sodium Hypochlorite Tank Level Transmitters to be removed and relocated. See Sheet 11–M–2 for additional details. See Electrical Sheets for cable details.
10	Existing gutter portion shall be cut and removed. See Structural Sheets for details.
11	Existing section of Alum piping to be demolished.
12	Existing Sodium Bisulfite Emergency Shower and Eyewash Station to be removed and reinstalled in proposed Sodium Bisulfite Feed Area.
13	Existing Sodium Hypochlorite Emergency Shower and Eyewash Station to be removed and relocated, with a portion of the existing Potable Water Piping to be demolished.
14	Existing small diameter piping to be demolished. See Construction Sequencing Notes and additional details on Sheet 11–M–2.

LEGEND:

TO BE DEMOLISHED

REMOVED AND REUSED

NOTES:

1. Existing chemical dosing systems shall remain in service during construction of proposed chemical dosing systems. See Sheet 11–M–2 for construction sequencing notes.
2. The existing concrete pedestals for the sodium hypochlorite tanks are not to be demolished and shall be re–used for the proposed sodium hypochlorite tanks.
3. Existing Alum yard piping to be demolished and replaced, See Existing Site and Demolition Plan Sheets and Yard Piping Sheets for details

NO.	DATE	REVISIONS	APP.

WILBARGER CREEK M.U.D. No. 2
TRAVIS COUNTY, TEXAS

WASTEWATER TREATMENT PLANT EXPANSION TO 1.5 MGD

CHEMICAL FEED SYSTEM DEMOLITION PLAN

QUIDDITY
Texas Board of Professional Engineers and Land Surveyors Reg. No. F-23290
912 South Capital of Texas Hwy, Suite 300 • Austin, TX 78746 • 512.441.9493

SCALE: 3/8" = 1'–0" DGN. BY: ZCOOPER
DATE: JUNE 2026 DWN. BY: INOLDIN
JOB NO. 0A651–0021–02 DWG. NO.
SUBMITTED: SURV. BY:
F.B. NO.

STATE OF TEXAS
ZACHARY A. COOPER
156249
LICENSED PROFESSIONAL ENGINEER
7/1/26

11–M–1
SHEET NO. 93 OF 230

C:\Users\JAS\DC\ACCDocs\Quiddity\0A651–0021–02 _ WILBARGER WWTP EXP. 1.5 MGD\Project Files\PLANS\MECH–A11.dwg, Jun 29, 2026 – 5:19pm, JAS

0 1 2 3 4 5 ORIGINAL SCALE IN INCHES FOR REDUCED PLANS

CONSTRUCTION SEQUENCING NOTES:

1. All existing chemical dosing systems shall remain online during the relocation and construction of the new chemical dosing systems. Panel CP–11–001 shall be installed prior to any other items of work. Effluent and NPW flow signals and data are routed to Panel CP–11–001 and shall remain as such during construction.

2. For all field piping demolition, The Contractor shall install and connect proposed Yard NPW, PW, SH, and SBS piping to the extent necessary to make temporary connection to allow for demolition and replacement. Temporary connections shall be properly labeled, insulated, and supported to allow for adequate system operation.

3. The Contractor shall begin the improvements in the Sodium Hypochlorite Feed Area. Prior to the relocation of the existing pump skid, the existing feed pump PSP–11A–201 shall be removed and temporary piping along with electrical and instrumentation shall be installed to connect to existing SWT–11A–201. Flow signaling connecting back to Panel CP–11–001 shall be established for PSP–11A–201. The existing pump skid shall then be relocated, with the new pumps installed in place on the existing skid. SWT–11A–101 shall then be replaced in place and connected to the relocated pump skid, using existing piping as able and new piping as required. Once the new SWT–11A–101 is installed and in service, SWT–11A–201 shall be replaced in place and connected to the new pumps. The temporary piping and existing PSP–11A–201 shall then be removed.

4. Construction of new Sodium Bisulfite Feed Tank Area shall commence following the work in the Sodium Hypochlorite Feed Tank Area. All pads, pedestals, tanks, insulation, canopy, access, and associated piping and appurtenances along with relocation and installation of the existing shower and eye wash and all underground piping improvements, shall be constructed in the new SBS area prior to the relocation and replacement of existing pumps on the Sodium Bisulfite pump skid.

5. After the new Sodium Bisulfite Feed Tank Area has been constructed and piping, feed tanks, and associated appurtenances are in place as needed for a working system, remove the existing SBS pump skid but keep the existing pump PSP–11B–201 in service with temporary piping along with electrical and instrumentation connected to the existing tank SWT–11B–201 and underground piping running to the dechlorination chamber. Flow signaling connecting back to Panel CP–11–001 shall be established for PSP–11B–201. The Contractor shall then demolish existing SBS pump PSP–11B–101 and relocate the existing pump skid to the new SBS Feed Tank Area. The Contractor shall install the pump skid and proposed SBS pump PSP–11B–101 at the skid and demolish the existing PSP–11B–201 and all associated temporary piping, the existing SWT–11B–101 and SWT–11B–201, the concrete pedestals, and all other appurtenances per the demolition plan on sheet 11–M–1.

6. All construction to the Alum Feed Tank Area and associated appurtenances shall follow the SH and SBS construction. Existing Alum pumps shall remain in service during construction. The proposed Alum Feed Tank and Pump Skid shall be installed and put into service before the removal and reconnection of the existing Alum piping. See sheet 11–M–5 for details.

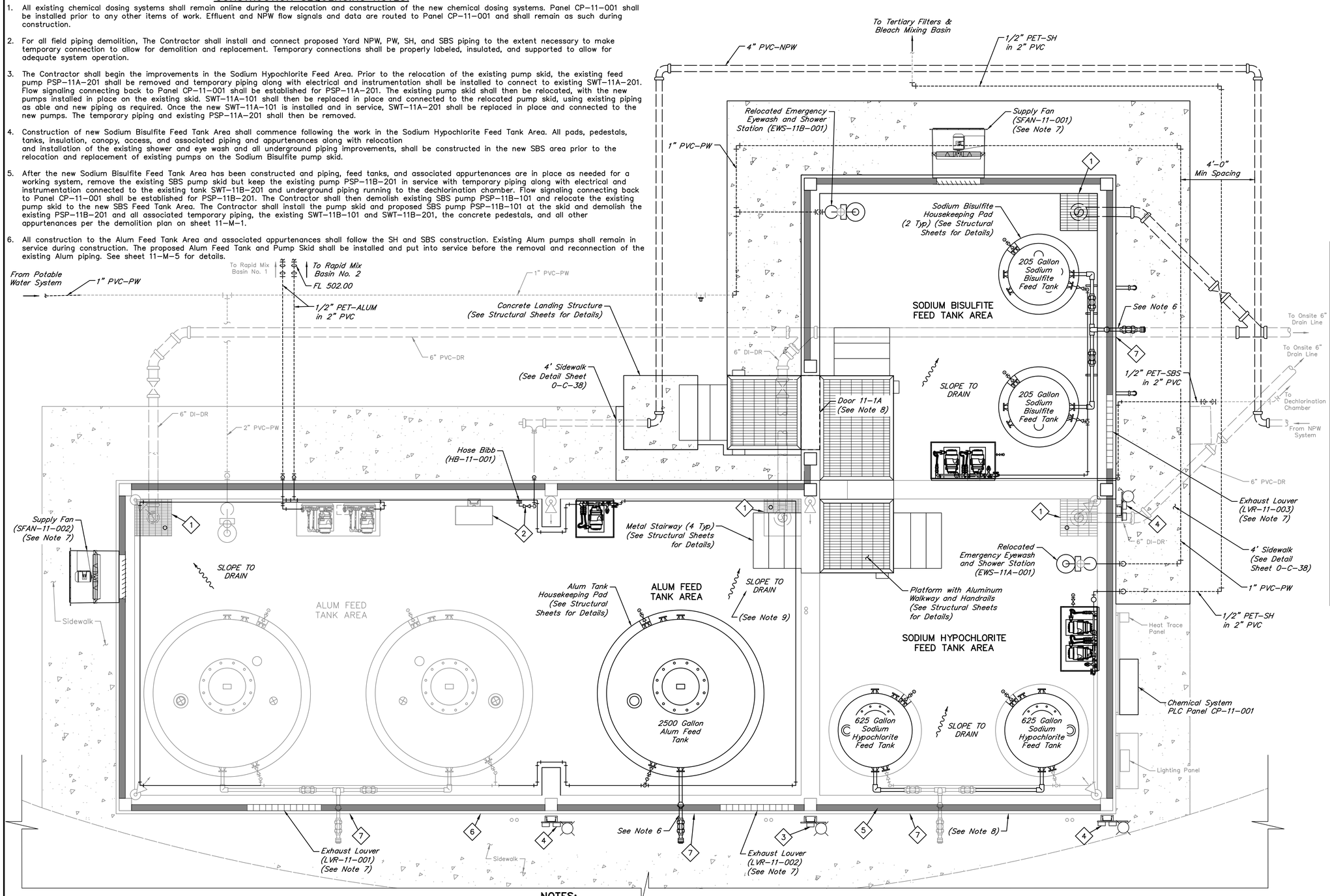

NOTES:

1. Small diameter piping not shown for clarity. Refer to P&ID's.
2. Fasten and support all piping 2"ø and smaller using stainless steel struts and stainless steel hardware mounted to walls.
3. Insulate all Alum, Sodium Hypochlorite, Sodium Bisulfite, Water and small diameter process piping.
4. Route Sodium Hypochlorite (SH) line to continuous rise to a high point w/ a degassing valve.
5. Alum, Sodium Hypochlorite, Sodium Bisulfite, and Potable Water piping shall be heat traced.
6. Support quick connect fill station w/ uni–strut at an elevation of 508.50.
7. Contractor shall install fans and louvers with insect screens within metal enclosure at locations shown in plan view. Install all supply fans 1'–2' below ceiling and all exhaust louvers 6" above the top of concrete wall.
8. **Hazardous material signs applicable to the chemicals being used in this facility must be placed by The Contractor at the building entrance and on a minimum of two building exterior walls.**
9. Contractor to slope grout with a minimum slope of 1%. Contractor to add grout to existing feed tank area slabs during construction to ensure minimum slope to drain is met at all areas.

0 1 2 3 6
SCALE: 3/8"=1'

ITEMS OF WORK NOTE:

Items of work are not limited to the tables or callouts on this sheet. See sheets 11–M–3 through 11–M–8 for additional details.

ITEMS OF WORK

No.	DESCRIPTION
1	Float switches to be installed in every sump drain both proposed and existing. See P&IDs for details.
2	Existing Hose Bibb (HB–11–001) and Hose Rack to be relocated to the area shown on this sheet. Hose Bibb piping to run above ground and penetrate through enclosure to connect to existing Hose Bibb following relocation with fittings as required.
3	Proposed Alum Level Transmitter to be installed outside the proposed enclosure. See plan view for location.
4	Existing Alum, SBS and SH Tank Level Transmitters to be installed at the areas outside of the proposed enclosure as shown in plan view and reconnected to their respective tanks. See Structural Sheets for mounting details. See Electrical Sheets for cable details.
5	Install metal wall panels around the outer edges of existing and proposed chemical feed canopy structure. Contractor shall field verify existing and proposed penetration locations to ensure no conflict in metal wall panel fabrication or installation. See Structural Sheets for details.
6	Contractor shall add a sign on the outside of the chemical enclosure. The sign will notate the fill level required for each chemical tank. Reference manufacturer information for details on the fill levels.
7	Contractor shall add 4 total alarm beacons that will be set to alarm and flash red if the tanks reach a set high level while being filled. The beacon will be visible outside the enclosure at every fill station.

NO.	DATE	REVISIONS	APP.

WILBARGER CREEK M.U.D. No. 2
TRAVIS COUNTY, TEXAS

WASTEWATER TREATMENT PLANT EXPANSION TO 1.5 MGD

CHEMICAL FEED SYSTEM OVERALL IMPROVEMENTS PLAN

QUIDDITY
Texas Board of Professional Engineers and Land Surveyors Reg. No. F-23290
912 South Capital of Texas Hwy, Suite 300 • Austin, TX 78746 • 512.441.9493

SCALE: 3/8" = 1'–0" DGN. BY: ZCOOPER
DATE: JUNE 2026 DWN. BY: INOLDIN
JOB NO. 0A651–0021–02 DWG. NO.
SUBMITTED: SURV. BY:
F.B. NO.

STATE OF TEXAS
ZACHARY A. COOPER
156249
LICENSED PROFESSIONAL ENGINEER
7/1/26

11–M–2
SHEET NO. 94 OF 230

C:\Users\JAS\DC\ACCDocs\Quiddity\0A651–0021–02 _ WILBARGER WWTP EXP. 1.5 MGD\Project Files\PLANS\MECH–A11.dwg, Jun 29, 2026 – 5:16pm, JAS

ORIGINAL SCALE IN INCHES FOR REDUCED PLANS

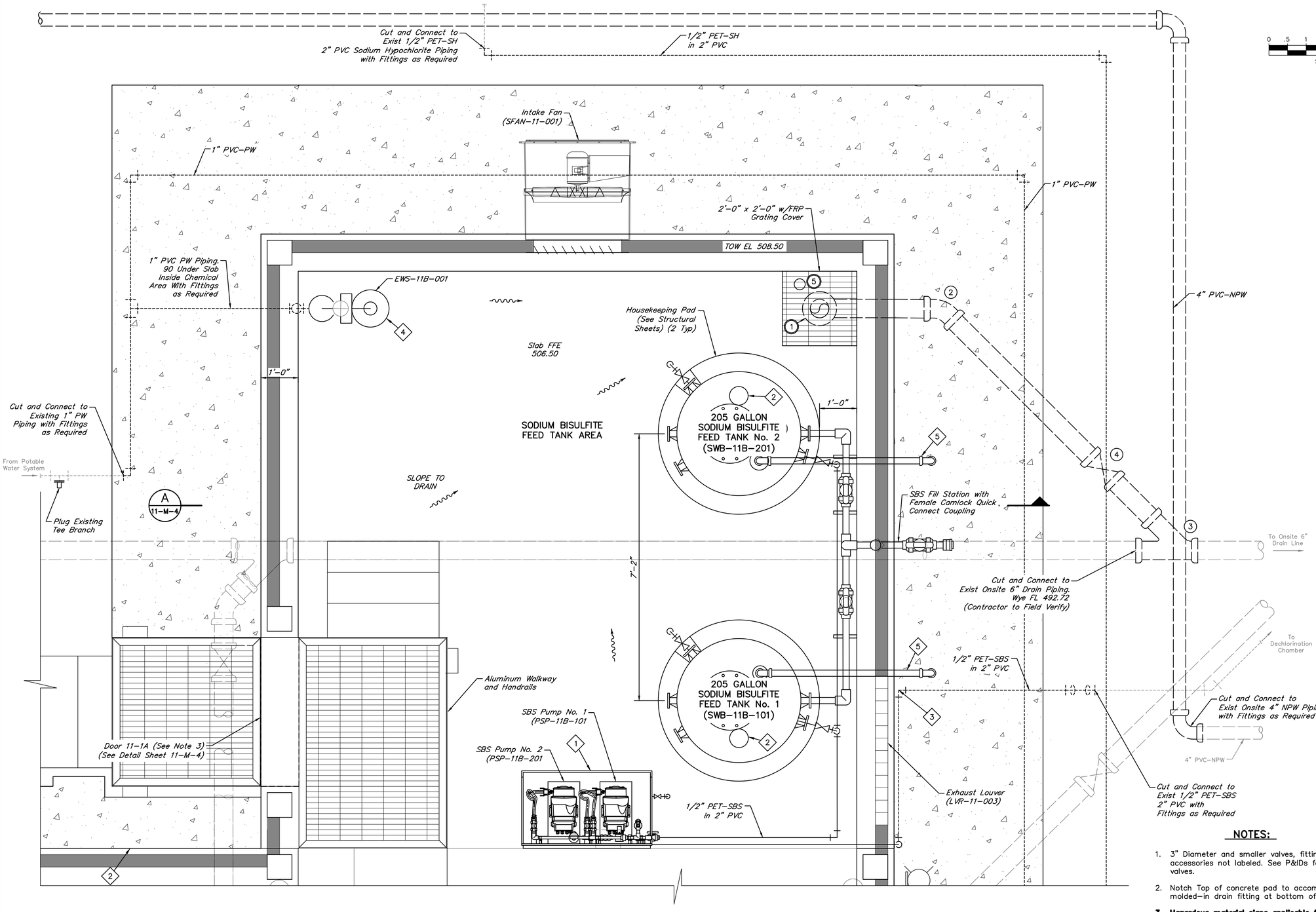

0 .5 1 2 3 4
SCALE: 3/4" = 1'

VALVES, FITTINGS, AND ACCESSORIES SCHEDULE

No.	DESCRIPTION
1	6" 90° Bend, MJ
2	6" 45° Bend
3	6" WYE
4	6" Plug Valve (PV-11B-001) w/ Valve Box
5	Float Switch (See Electrical Sheets)

◎ Indicates Restrained Valve or Fitting.

ITEMS OF WORK

No.	DESCRIPTION
1	Existing SBS Skid shall be removed from existing SBS Feed Tank Area and installed at the proposed SBS Feed Tank Area as shown in this sheet and as dictated in the sequencing notes on Sheet 11-M-2. SBS Peristaltic Pumps shall be replaced in place on existing skid with fittings as required and in accordance with manufacturer recommendations.
2	Contractor shall verify FFE of existing sidewalk and match FFE when pouring proposed sidewalk. See Sheet 0-C-38 for sidewalk details.
3	Contractor shall cut and connect proposed SBS piping to existing SBS underground piping with a 2" 90° bend at location shown. Existing SBS piping to the northwest of the proposed 90° bend shall be abandoned in place during construction.
4	Existing SBS Emergency Shower and Eyewash Station shall be removed from existing SBS Feed Tank Area and installed at the proposed SBS Feed Tank Area as shown on this sheet and as dictated in the sequencing notes on Sheet 11-M-2.
5	Contractor shall modify tank vents to route outdoors, penetrating through enclosure wall, with fittings and piping supports as required.

NOTES:

1. 3" Diameter and smaller valves, fittings and accessories not labeled. See P&IDs for valves.
2. Notch Top of concrete pad to accommodate molded-in drain fitting at bottom of tank.
3. **Hazardous material signs applicable to the chemicals being used in this facility must be placed by The Contractor at the building entrance and on a minimum of two building exterior walls.**
4. Contractor to slope grout with a minimum slope of 1%.

NO.	DATE	REVISIONS	APP.

WILBARGER CREEK M.U.D. No. 2
TRAVIS COUNTY, TEXAS

WASTEWATER TREATMENT PLANT EXPANSION TO 1.5 MGD

SODIUM BISULFITE FEED SYSTEM PLAN

QUIDDITY
Texas Board of Professional Engineers and Land Surveyors Reg. No. F-23290
912 South Capital of Texas Hwy, Suite 300 • Austin, TX 78746 • 512.441.9493

SCALE:	3/4" = 1'-0"	DGN. BY:	ZCOOPER
DATE:	JUNE 2026	DWN. BY:	INOLDIN
JOB NO.	0A651-0021-02	DWG. NO.	
SUBMITTED:		SURV. BY:	
		F.B. NO.	

STATE OF TEXAS
ZACHARY A. COOPER
156249
LICENSED PROFESSIONAL ENGINEER
7/1/26

11-M-3
SHEET NO. 95 OF 230

C:\Users\JAS\DC\ACCDocs\Quiddity\0A651-0021-02 _ WILBARGER WWTP EXP. 1.5 MGD\Project Files\PLANS\MECH-A11.dwg, Jun 29, 2026 - 5:05pm, JAS

0 1 2 3 4 5 ORIGINAL SCALE IN INCHES FOR REDUCED PLANS

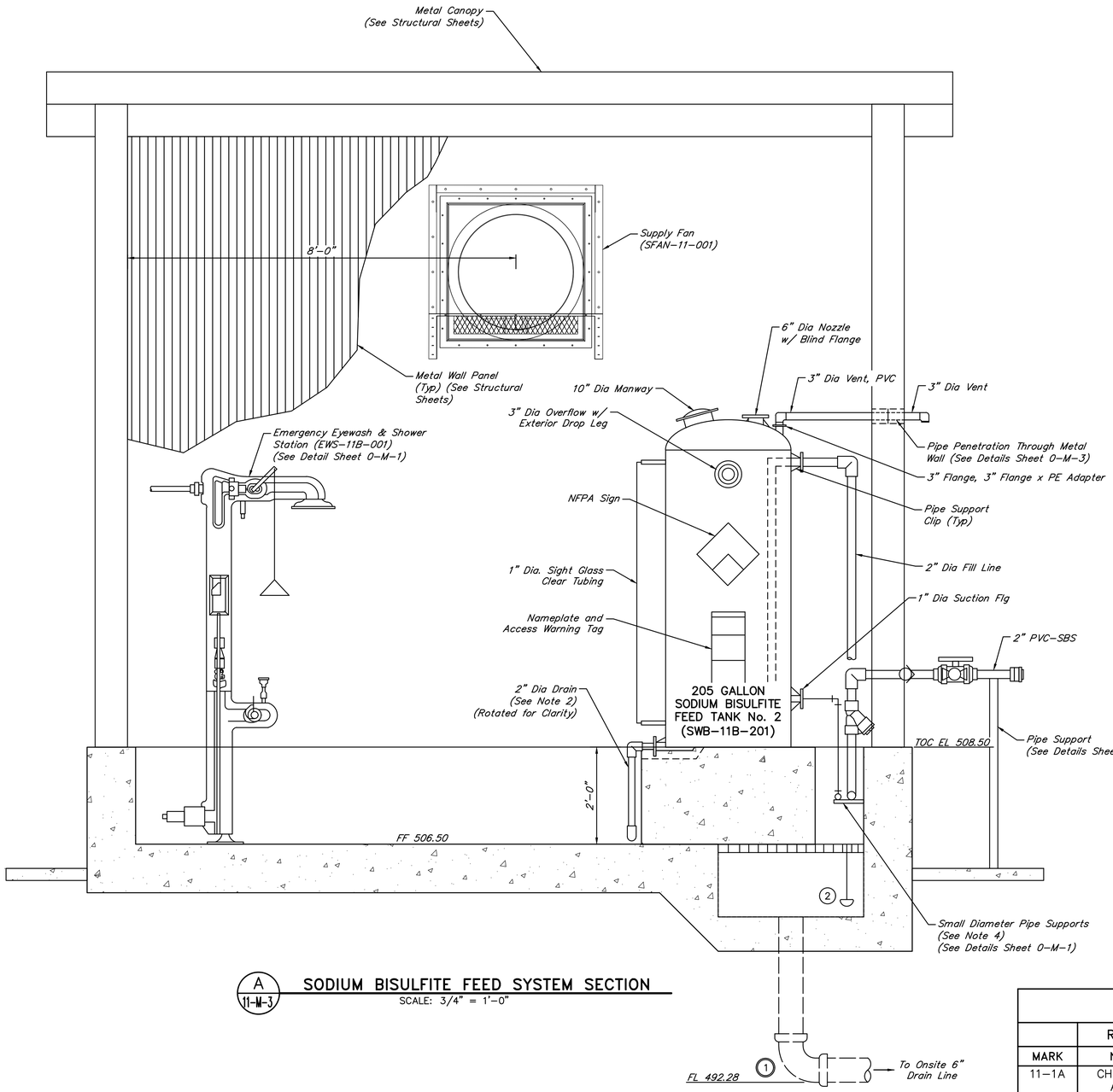

A / 11-M-3 SODIUM BISULFITE FEED SYSTEM SECTION
SCALE: 3/4" = 1'-0"

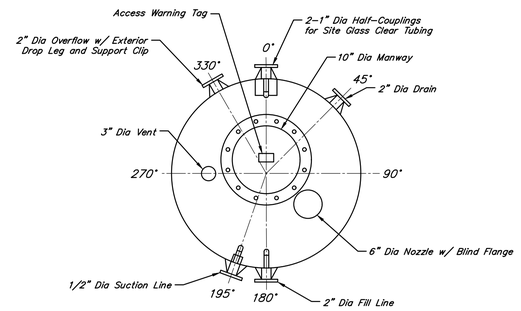

SWT-11B-101 TOP VIEW – NORTHWEST UP ORIENTATION
SCALE: 3/4" = 1'-0"

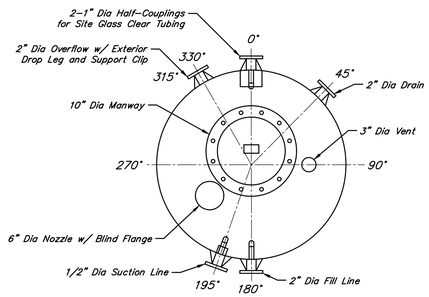

SWT-11B-201 TOP VIEW – NORTHWEST UP ORIENTATION
SCALE: 3/4" = 1'-0"

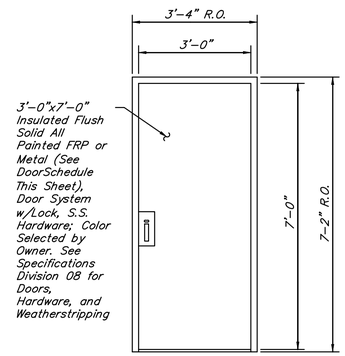

BUILDING DOOR DETAIL
NOT TO SCALE

DOOR SCHEDULE

	ROOM	DOOR DESCRIPTION						FRAME		
MARK	NAME	TYPE	WIDTH	HEIGHT	THICK	MAT	FINISH	MAT	FINISH	REMARKS
11-1A	CHEMICAL AREA	A	3'-0"	7'-0"	0'-1 3/4"	FRP	PAINT	AL	PAINT	1'x1' WINDOW, PANIC HDW

0 .5 1 2 3 4
SCALE: 3/4" = 1'

VALVES, FITTINGS, AND ACCESSORIES SCHEDULE

No.	DESCRIPTION
1	6" 90° Bend, MJ
2	Float Switch (See Electrical Sheets)

Denotes Restrained Valve or Fitting.

NOTES:

1. 3" diameter and smaller valves, fittings, and accessories not labeled. See P&IDs for valves.
2. Notch top of concrete pad to accommodate molded-in drain fitting at bottom of tank.
3. Tank overflow not shown on section view for clarity. Site glass tubing, drain, and suction line rotated for clarity.
4. Small diameter pipe supports shall be installed every 5' for the entirety of the supported pipe run.

NO.	DATE	REVISIONS	APP.

WILBARGER CREEK M.U.D. No. 2
TRAVIS COUNTY, TEXAS

WASTEWATER TREATMENT PLANT
EXPANSION TO 1.5 MGD

SODIUM BISULFITE
FEED SYSTEM SECTION

QUIDDITY
Texas Board of Professional Engineers and Land Surveyors Reg. No. F-23290
912 South Capital of Texas Hwy, Suite 300 • Austin, TX 78746 • 512.441.9493

SCALE: 3/4" = 1'-0" DGN. BY: ZCOOPER
DATE: JUNE 2026 DWN. BY: INOLDIN
JOB NO. 0A651-0021-02 DWG. NO.
SUBMITTED: SURV. BY:
F.B. NO.

STATE OF TEXAS
ZACHARY A. COOPER
156249
LICENSED PROFESSIONAL ENGINEER
7/1/26

11-M-4
SHEET NO. 96 OF 230

C:\Users\JAS\DC\ACCDocs\Quiddity\0A651-0021-02 _ WILBARGER WWTP EXP. 1.5 MGD\Project Files\PLANS\MECH-A11.dwg, Jun 25, 2026 – 4:13pm, JAS

ORIGINAL SCALE IN INCHES FOR REDUCED PLANS

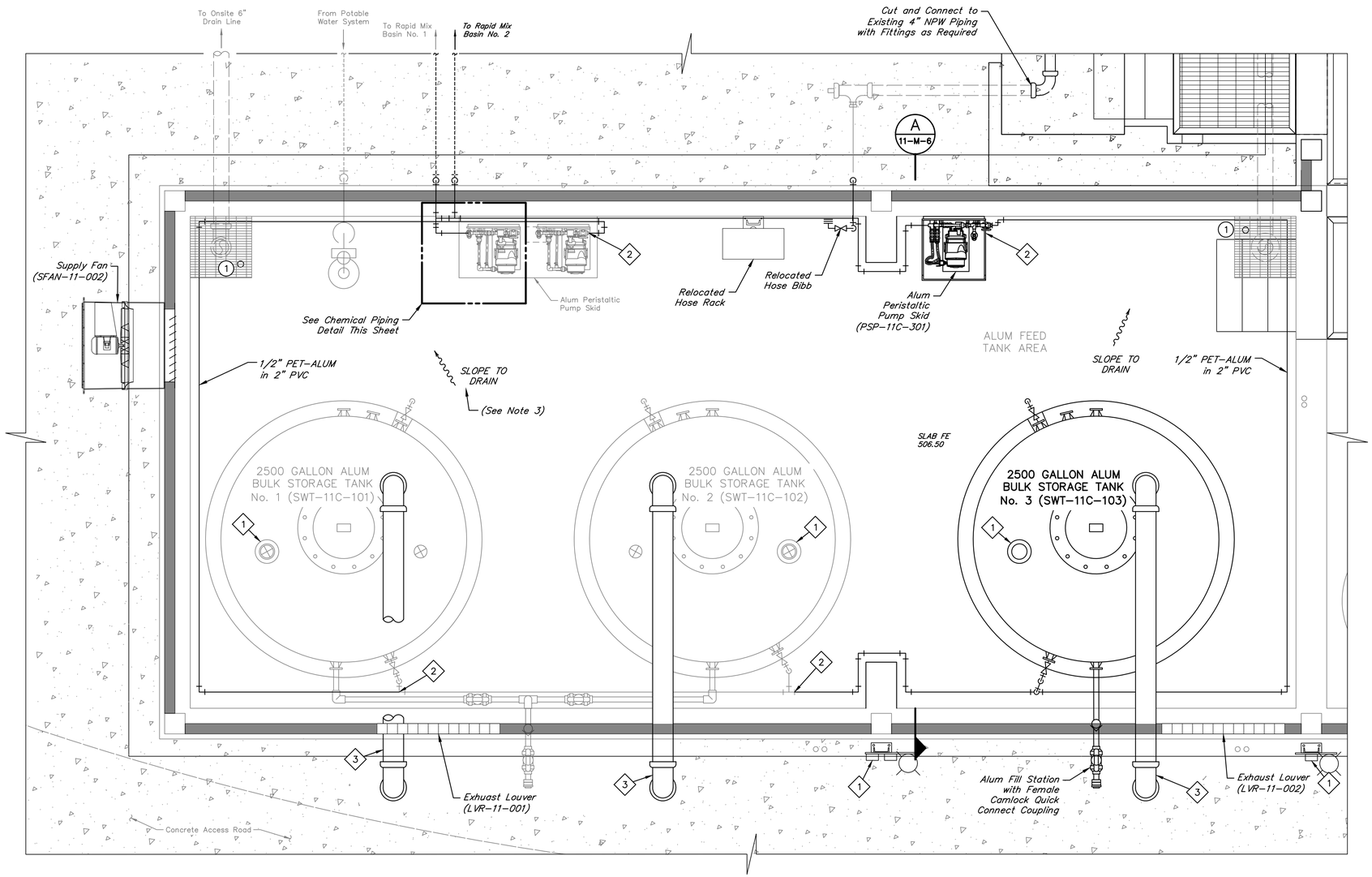

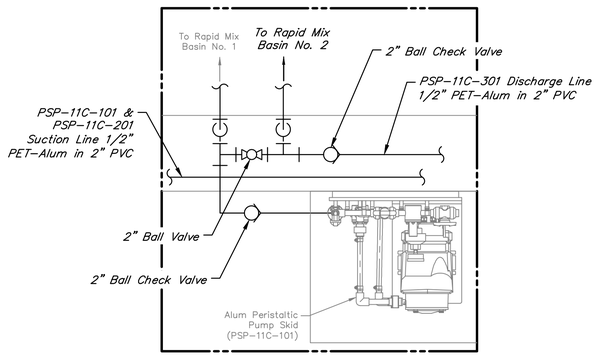

CHEMICAL PIPING DETAIL

SCALE: N.T.S.

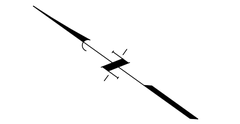

VALVES, FITTINGS, AND ACCESSORIES SCHEDULE	
No.	DESCRIPTION
1	Float Switch (See Electrical Sheets)

ITEMS OF WORK	
No.	DESCRIPTION
1	Contractor shall connect existing and proposed tank level transmitters to the areas shown outside of the enclosure in plan view. See Electrical Sheets for cable details.
2	Following removal of existing Alum piping, contractor shall install the proposed Alum Storage Tank and Alum Pump Skid. Once these items and their associated piping & appurtenances are installed and in service, contractor shall remove the existing Alum piping and reconnect piping at the locations shown. Piping shall be wall mounted (shown on the floor in this sheet for clarity). Contractor shall connect section of proposed Alum and existing suction piping shown on this sheet, and install all associated valves and appurtenances as shown in the P&ID's. Contractor to coordinate with operator to minimize any alum feed system downtime during construction.
3	Contractor shall modify tank vents to route outdoors, penetrating through enclosure wall, with fittings and piping supports as required.

NOTES:

1. 3" Diameter and smaller valves, fittings and accessories not labeled. See P&IDs for valves.
2. Notch top of concrete pad to accommodate molded-in drain fitting at bottom of tank.
3. Contractor to slope grout with a minimum slope of 1%. Contractor to add grout to exsiting feed tank area slabs during construction to ensure minimum slope to drain is met at all areas.

NO.	DATE	REVISIONS	APP.

WILBARGER CREEK M.U.D. No. 2
TRAVIS COUNTY, TEXAS

WASTEWATER TREATMENT PLANT EXPANSION TO 1.5 MGD

ALUM FEED SYSTEM IMPROVEMENTS PLAN

QUIDDITY
Texas Board of Professional Engineers and Land Surveyors Reg. No. F-23290
912 South Capital of Texas Hwy, Suite 300 • Austin, TX 78746 • 512.441.9493

SCALE: AS SHOWN
DATE: JUNE 2026
JOB NO. 0A651-0021-02
SUBMITTED:
DGN. BY: ZCOOPER
DWN. BY: INOLDIN
DWG. NO.
SURV. BY:
F.B. NO.

STATE OF TEXAS
ZACHARY A. COOPER
156249
LICENSED PROFESSIONAL ENGINEER
7/1/26

11-M-5

SHEET NO. 97 OF 230

C:\Users\JAS\DC\ACCDocs\Quiddity\0A651-0021-02 _ WILBARGER WWTP EXP. 1.5 MGD\Project Files\PLANS\MECH-A11.dwg, Jun 25, 2026 - 4:14pm, JAS

0 1 2 3 4 5 ORIGINAL SCALE IN INCHES FOR REDUCED PLANS

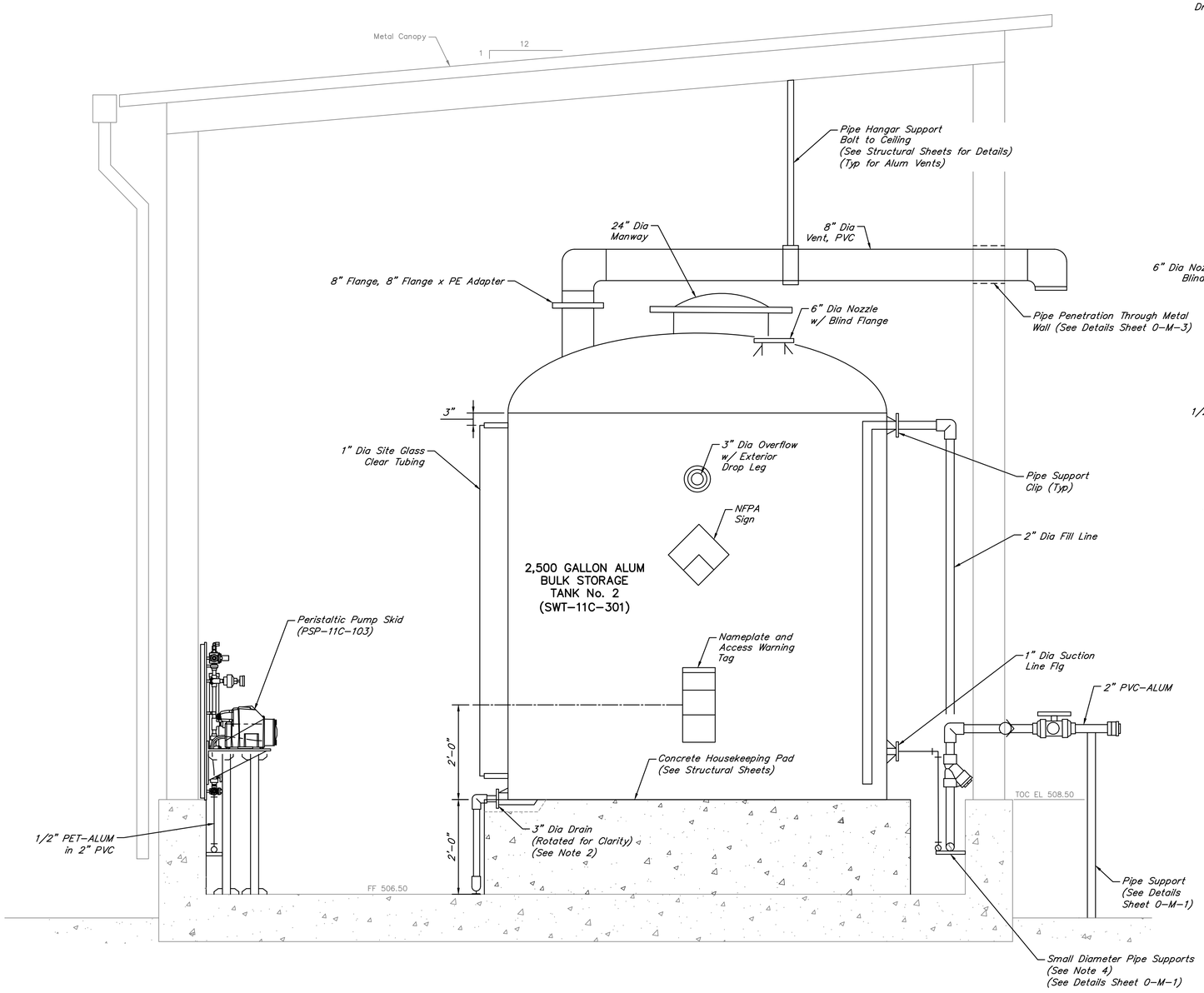

A / 11-M-5 **ALUM FEED SYSTEM SECTION**
SCALE: 3/4" = 1'-0"

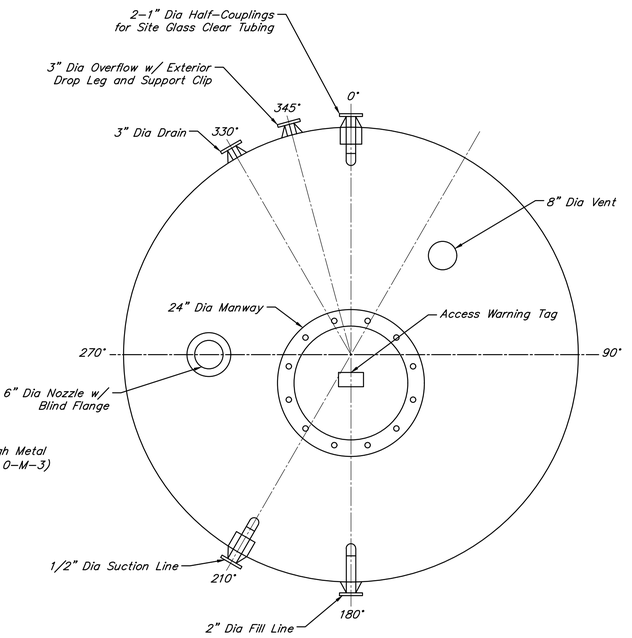

SWT-11C-301 TOP VIEW – NORTHEAST UP ORIENTATION
SCALE: 3/4" = 1'-0"

0 .5 1 2 3 4
SCALE: 3/4" = 1'

NOTES:

1. 3" diameter and smaller valves, fittings, and accessories not labeled. See P&IDs for valves.
2. Notch top of concrete pad to accommodate molded-in drain fitting at bottom of tank.
3. Tank overflow not shown on section view for clarity. Site glass tubing, drain, and suction line rotated for clarity.
4. Small diameter pipe supports shall be installed every 5' for the entirety of the supported pipe run.

NO.	DATE	REVISIONS	APP.

WILBARGER CREEK M.U.D. No. 2
TRAVIS COUNTY, TEXAS

WASTEWATER TREATMENT PLANT EXPANSION TO 1.5 MGD

ALUM FEED SYSTEM IMPROVEMENTS SECTION

QUIDDITY
Texas Board of Professional Engineers and Land Surveyors Reg. No. F-23290
912 South Capital of Texas Hwy, Suite 300 • Austin, TX 78746 • 512.441.9493

SCALE: 3/4" = 1'-0" DGN. BY: ZCOOPER
DATE: JUNE 2026 DWN. BY: INOLDIN
JOB NO. 0A651-0021-02 DWG. NO.
SUBMITTED: SURV. BY:
F.B. NO.

STATE OF TEXAS
ZACHARY A. COOPER
156249
LICENSED PROFESSIONAL ENGINEER
7/1/26

11-M-6
SHEET NO. 98 OF 230

C:\Users\JAS\DC\ACCDocs\Quiddity\0A651-0021-02 _ WILBARGER WWTP EXP. 1.5 MGD\Project Files\PLANS\MECH-A11.dwg, Jun 25, 2026 – 4:17pm, JAS

ORIGINAL SCALE IN INCHES FOR REDUCED PLANS

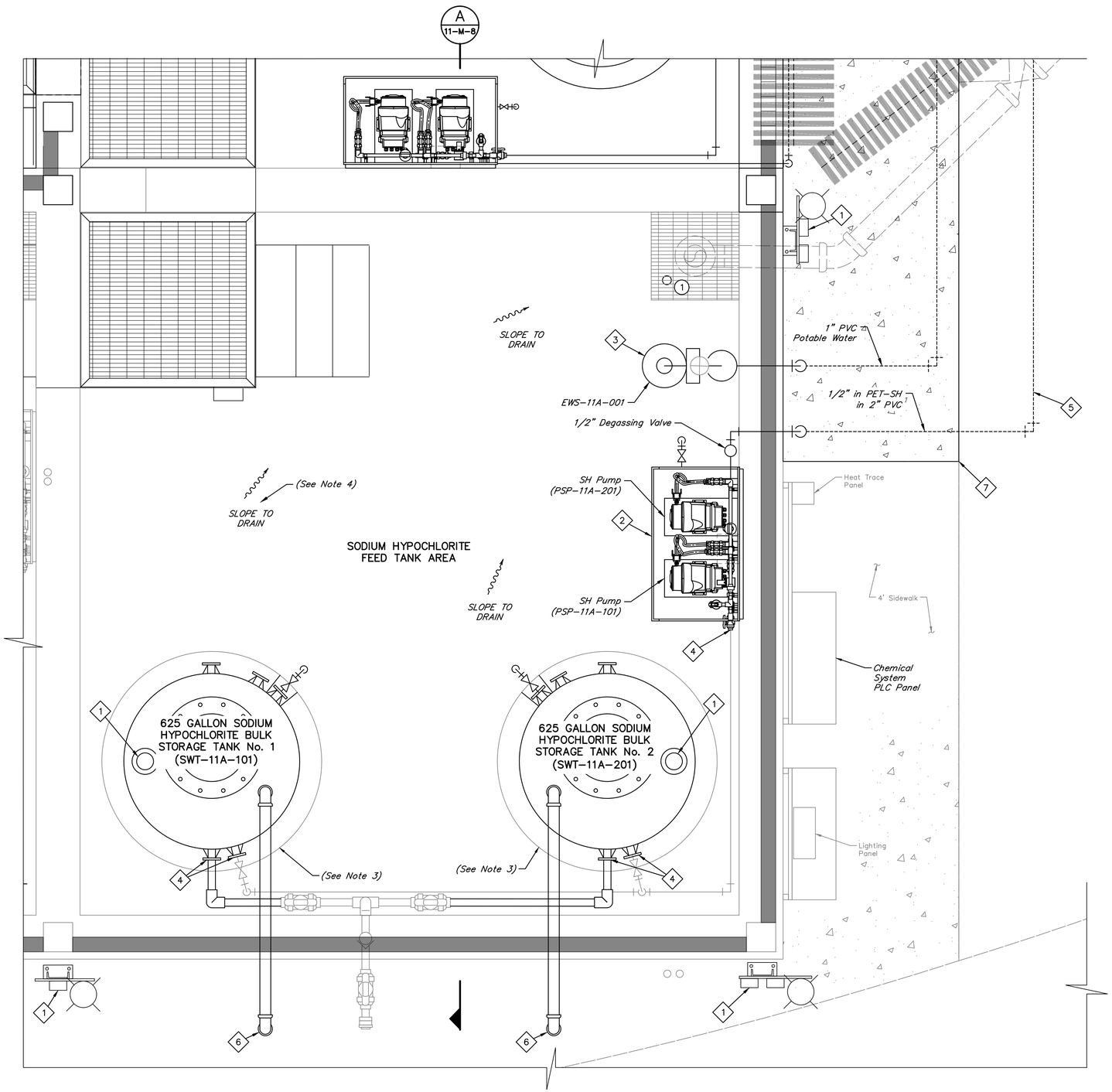

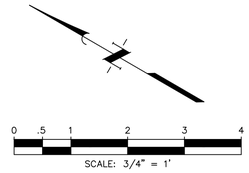

VALVES, FITTINGS, AND ACCESSORIES SCHEDULE

No.	DESCRIPTION
1	Float Switch (See Electrical Sheets)

ITEMS OF WORK

No.	DESCRIPTION
1	Contractor shall connect existing tank level transmitters to the area shown outside of the enclosure in plan view. See Electrical Sheets for details.
2	Contractor shall relocate and install existing SH pump skid in the location shown and replace the existing SH pumps, with fittings as required and in accordance with manufacturer recommendations. Follow sequencing notes on Sheet 11-M-2 during construction.
3	Contractor shall relocate and install existing SH Emergency Shower and Eyewash Station, along with its appurtenances, in the location shown with fittings as required. Piping shall be routed to connect to existing potable water line. Follow sequencing notes on Sheet 11-M-2 during construction.
4	Existing SH tank fill and suction piping, including wall mounted piping, to remain in place to connect to relocated pump skid and proposed tanks with fittings as required.
5	Install Proposed SH Pump discharge piping as shown on this sheet and run to the Tertiary Filters and Bleach Mixing Basin. See Yard Piping Sheets for additional details. All piping outside of the enclosure shall be insulated. Existing SH piping running to the northeast following the skid's previous location shall be abandoned in place during construction.
6	Contractor shall modify tank vents to route outdoors, penetrating through enclosure wall, with fittings and piping supports as required.
7	Contractor shall verify FFE of existing sidewalk and match FFE when pouring proposed sidewalk. See Sheet 0-C-38 for sidewalk details.

NOTES:

1. 3" Diameter and smaller valves, fittings and accessories not labeled. See P&IDs for valves.
2. Notch top of concrete pad to accommodate molded-in drain fitting at bottom of tank.
3. Existing SH tank concrete pedestals shall remain in place with proposed SH tanks installed on the existing pedestals during construction.
4. Contractor to slope grout with a minimum slope of 1%. Contractor to add grout to exsiting feed tank area slabs during construction to ensure minimum slope to drain is met at all areas.

NO.	DATE	REVISIONS	APP.

WILBARGER CREEK M.U.D. No. 2
TRAVIS COUNTY, TEXAS

WASTEWATER TREATMENT PLANT EXPANSION TO 1.5 MGD

SODIUM HYPOCHLORITE FEED SYSTEM IMPROVEMENTS PLAN

QUIDDITY
Texas Board of Professional Engineers and Land Surveyors Reg. No. F-23290
912 South Capital of Texas Hwy, Suite 300 • Austin, TX 78746 • 512.441.9493

SCALE: 3/4" = 1'-0" DGN. BY: ZCOOPER
DATE: JUNE 2026 DWN. BY: INOLDIN
JOB NO. 0A651-0021-02 DWG. NO.
SUBMITTED: SURV. BY:
F.B. NO.

STATE OF TEXAS
ZACHARY A. COOPER
156249
LICENSED PROFESSIONAL ENGINEER
7/1/26

11-M-7
SHEET NO. 99 OF 230

C:\Users\JAS\DC\ACCDocs\Quiddity\0A651-0021-02 _ WILBARGER WWTP EXP. 1.5 MGD\Project Files\PLANS\MECH-A11.dwg, Jun 25, 2026 - 4:19pm, JAS

0 1 2 3 4 5 ORIGINAL SCALE IN INCHES FOR REDUCED PLANS

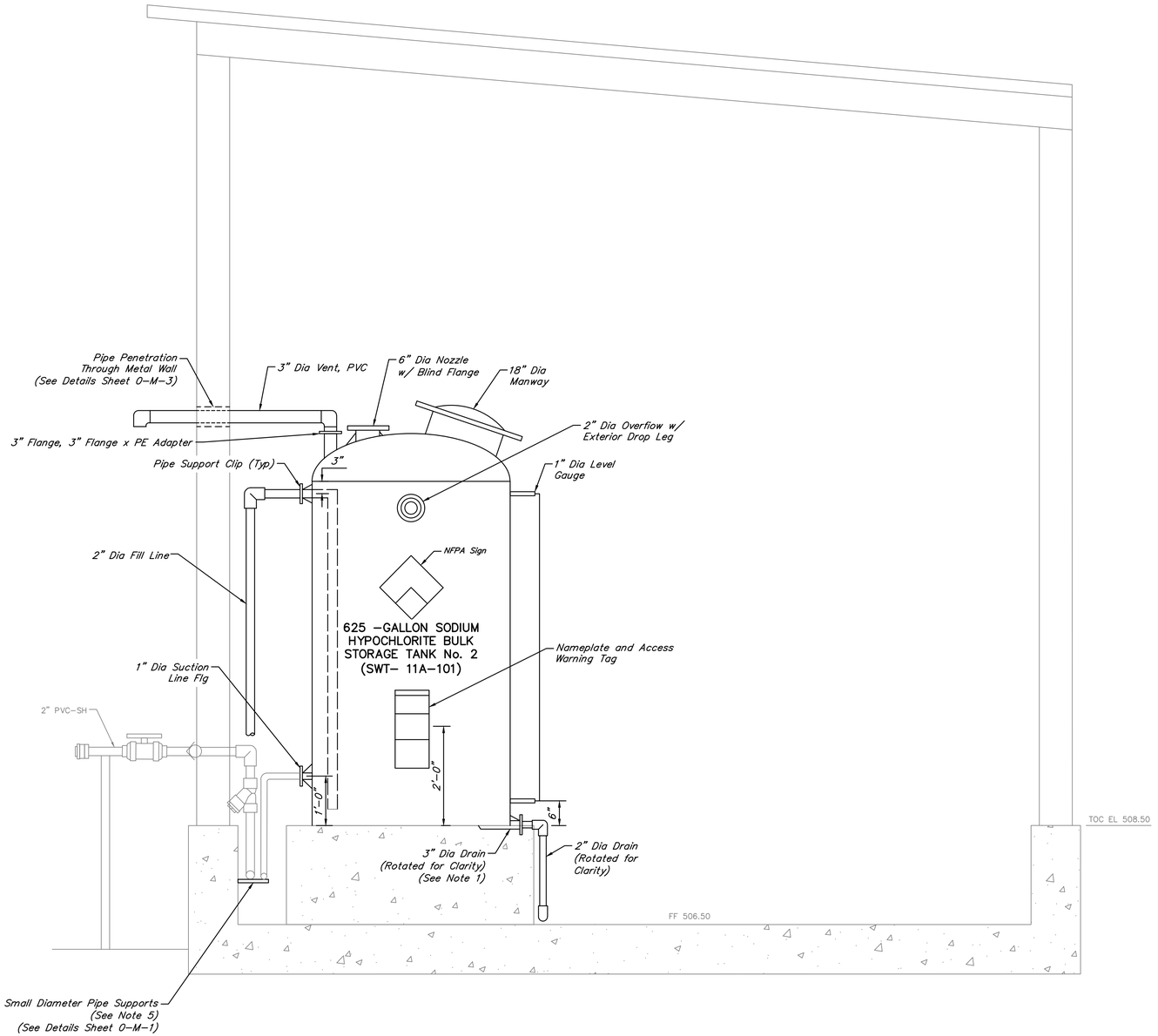

A 11-M-7 **SODIUM BISULFITE FEED SYSTEM SECTION**

SCALE: 3/4"=1'-0"

0 .5 1 2 3 4

SCALE: 3/4" = 1'

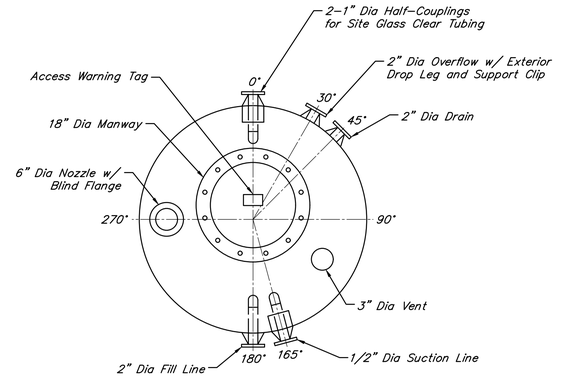

SWT-11A-101 TOP VIEW - NORTHEAST UP ORIENTATION

SCALE: 3/4" = 1'-0"

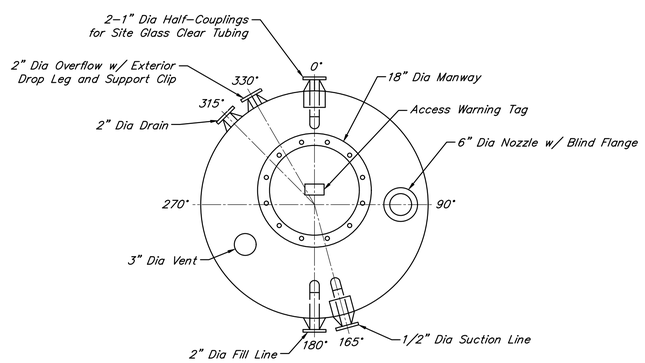

SWT-11A-201 TOP VIEW - NORTHEAST UP ORIENTATION

SCALE: 3/4" = 1'-0"

NOTES:

1. 3" Diameter and smaller valves, fittings and accessories not labeled. See P&IDs for valves.
2. Notch top of concrete pad to accommodate molded-in drain fitting at bottom of tank.
3. Existing SH tank concrete pedestals shall remain in place with proposed SH tanks installed on the existing pedestals during construction.
4. Tank overflow not shown on section view for clarity. Site glass tubing, drain, and suction line rotated for clarity.
5. Small diameter pipe supports shall be installed every 5' for the entirety of the supported pipe run as required.

NO.	DATE	REVISIONS	APP.

WILBARGER CREEK M.U.D. No. 2
TRAVIS COUNTY, TEXAS

WASTEWATER TREATMENT PLANT EXPANSION TO 1.5 MGD

SODIUM HYPOCHLORITE FEED SYSTEM IMPROVEMENTS SECTION

QUIDDITY
Texas Board of Professional Engineers and Land Surveyors Reg. No. F-23290
912 South Capital of Texas Hwy, Suite 300 • Austin, TX 78746 • 512.441.9493

SCALE:	3/4" = 1'-0"	DGN. BY:	ZCOOPER
DATE:	JUNE 2026	DWN. BY:	INOLDIN
JOB NO.	0A651-0021-02	DWG. NO.	
SUBMITTED:		SURV. BY:	
		F.B. NO.	

STATE OF TEXAS
ZACHARY A. COOPER
156249
LICENSED PROFESSIONAL ENGINEER
7/1/26

11-M-8

SHEET NO. 100 OF 230

C:\Users\JAS\DC\ACCDocs\Quiddity\0A651-0021-02 _ WILBARGER WWTP EXP. 1.5 MGD\Project Files\PLANS\MECH-A11.dwg, Jun 25, 2026 - 4:24pm, JAS

0 1 2 3 4 5 ORIGINAL SCALE IN INCHES FOR REDUCED PLANS

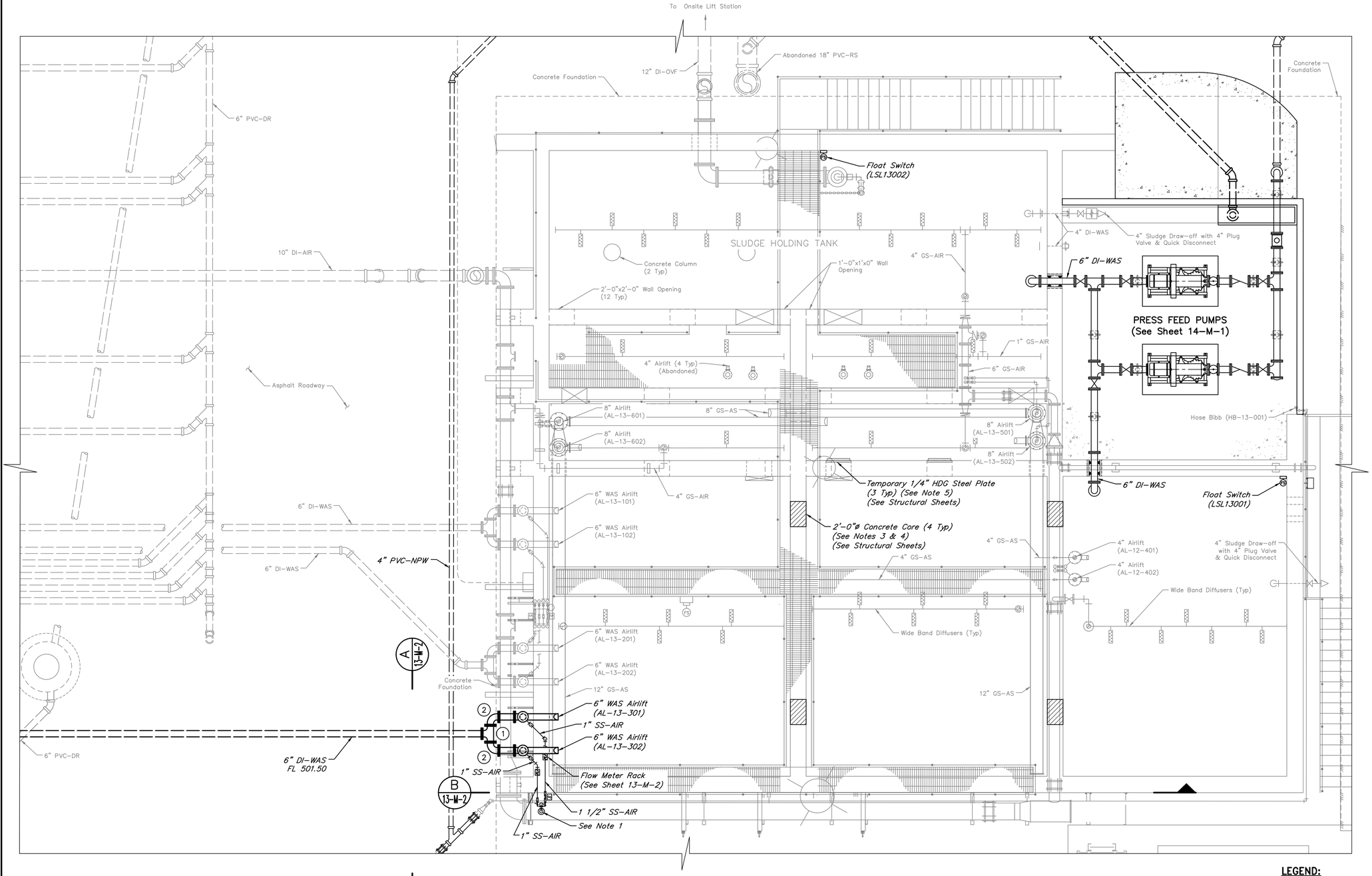

LEGEND:

TO BE DEMOLISHED

0 1 2 4 8 12

SCALE: 1/4" = 1'

VALVES, FITTINGS AND ACCESSORIES SCHEDULE

NO.	DESCRIPTION
1	6" X 6" Tee, FJ
2	6" 90° Bend, FJ
3	6" 90° Bend Flare, FJ
4	6" Plug Valve (PV-14A-101)
5	6" Plug Valve (PV-14A-201)
6	6" Plug Valve (PV-14A-102)
7	6" Plug Valve (PV-14A-202)

◎ Indicates Restrained Valve or Fitting

NOTES:

1. Replace existing 6" blind flange with a 6" threaded tapped flange w/ 1-1/2" tap connection.
2. Pipes with diameter less than 3" do not have all valves and fittings shown and are not labeled with valve and accessories schedule. Refer to P&IDs.
3. Contractor to coordinate with Operator on degritting and cleaning required for the proposed work. Contractor shall assume removal of the bottom eighteen inches (18") of grit removal in the basin for bidding purposes.
4. Short duration shutdown of the existing sludge holding tank will be required to complete the work. The sludge holding tank shall be out of service for no longer than 24 hours. Shutdowns shall be coordinated with the Engineer and Operator at least 3 weeks in advance.
5. Bolt Temporary 1/4" HDG steel plate to wall w/ 1/4" thick neoprene gasket between the plate and the wall. The top of plate elevation shall be 521.50' for the higher plate and 508.00 for the lower plates. Upon completion of all concrete cores, remove plate, cut anchor bolts, and grout cap.

NO.	DATE	REVISIONS	APP.

WILBARGER CREEK M.U.D. No. 2
TRAVIS COUNTY, TEXAS

WASTEWATER TREATMENT PLANT EXPANSION TO 1.5 MGD

SLUDGE HOLDING TANK DEMOLITION & IMPROVEMENTS PLAN

QUIDDITY
Texas Board of Professional Engineers and Land Surveyors Reg. No. F-23290
912 South Capital of Texas Hwy, Suite 300 • Austin, TX 78746 • 512.441.9493

SCALE: 1/4" = 1'-0" DGN. BY: JZYLBERBERG
DATE: FEBRUARY 2026 DWN. BY: SSOMERS
JOB NO. 0A651-0021-02 DWG. NO.
SUBMITTED: SURV. BY:
F.B. NO.

STATE OF TEXAS
JORDAN ZYLBERBERG
142350
LICENSED PROFESSIONAL ENGINEER
3/10/26

13-M-1
SHEET NO. 100 OF 230

C:\Users\jpatton\DC\ACCDocs\Quiddity – Water-\0A651-0021-02 _ WILBARGER WWTP EXP. 1.5 MGD\Project Files\PLANS\MECH-A13.dwg, Feb 20, 2026 – 9:31am, JAS

ORIGINAL SCALE IN INCHES FOR REDUCED PLANS

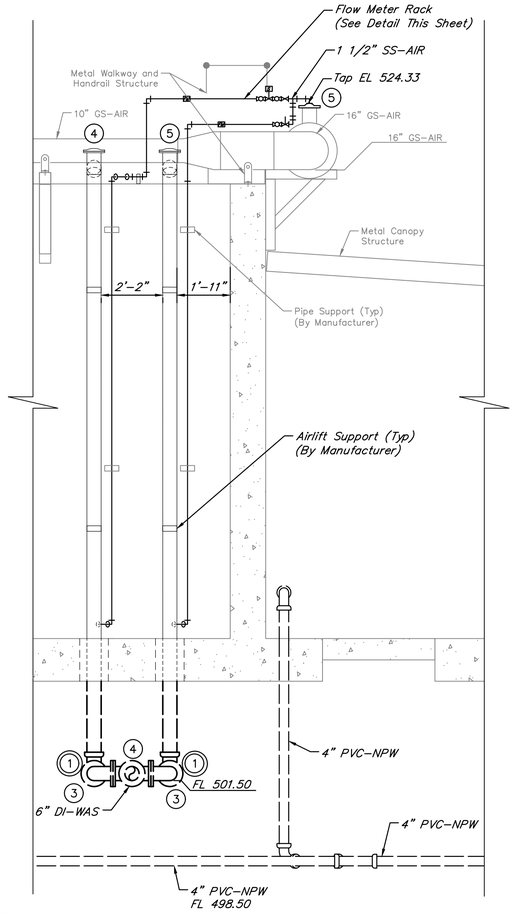

A 13-M-1 **SLUDGE HOLDING TANK SECTION**

SCALE: 3/8"=1'-0"

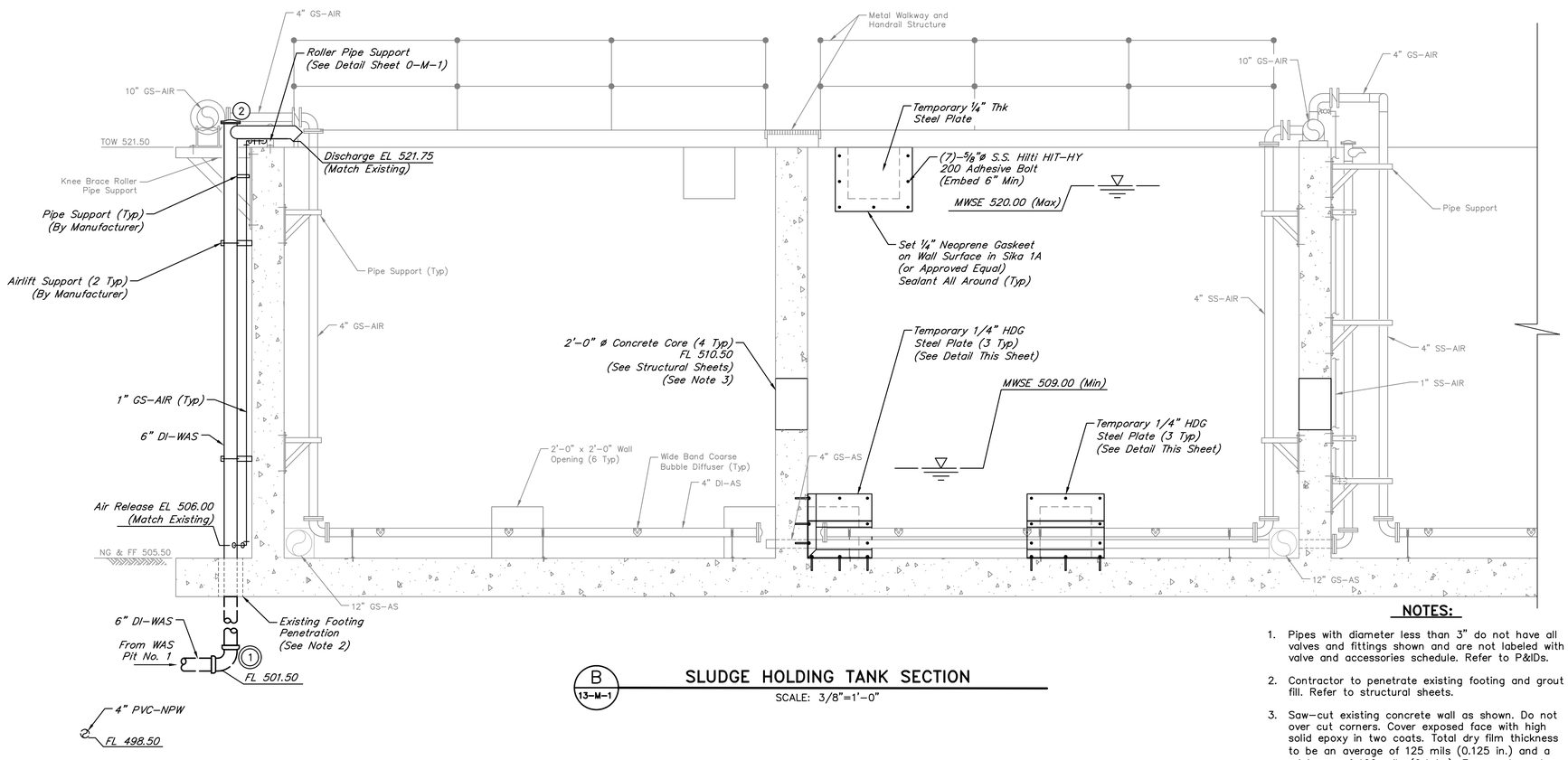

B 13-M-1 **SLUDGE HOLDING TANK SECTION**

SCALE: 3/8"=1'-0"

NOTES:

1. Pipes with diameter less than 3" do not have all valves and fittings shown and are not labeled with valve and accessories schedule. Refer to P&IDs.
2. Contractor to penetrate existing footing and grout fill. Refer to structural sheets.
3. Saw-cut existing concrete wall as shown. Do not over cut corners. Cover exposed face with high solid epoxy in two coats. Total dry film thickness to be an average of 125 mils (0.125 in.) and a minimum of 100 mils (0.1 in.). For supplementary information, refer to Specification 09921.

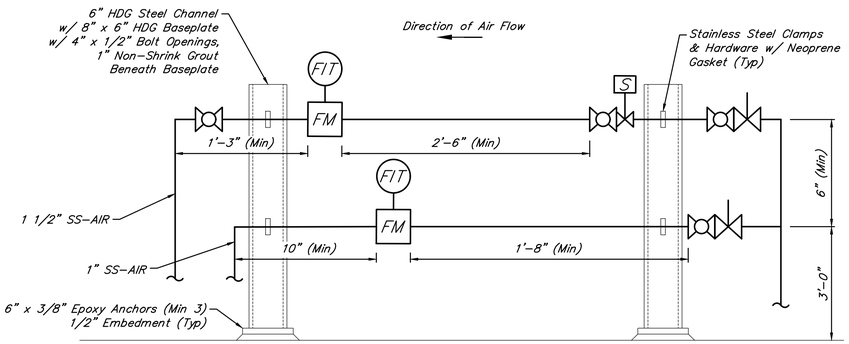

FLOW METER RACK DETAIL

NOT TO SCALE

NOTES:

1. This detail is typical. Contractor shall suit final per specific location requirements, air flow directions, and approved equipment manufacturer requirements.

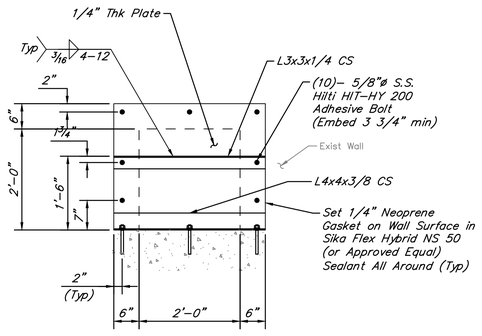

TEMPORARY STEEL PLATE DETAIL

NOT TO SCALE

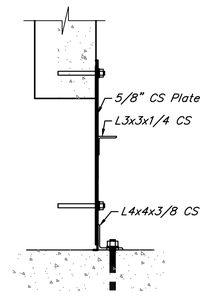

SECTION

NOT TO SCALE

VALVES, FITTINGS AND ACCESSORIES SCHEDULE

NO.	DESCRIPTION
1	6" 90° Bend, MJ
2	6" Airlift (AL-13-006)
3	6" 90° Bend, MJ
4	6" X 6" Tee, FJ
5	4" Blind Flange w/ 2" Threaded Connection
6	6" 45° Bend, PE

For Temporary Steel Plate Detail Only:

STATE OF TEXAS — AHMAD DANESHVAR — 132679 — LICENSED PROFESSIONAL ENGINEER

3/10/2026

NO.	DATE	REVISIONS	APP.

WILBARGER CREEK M.U.D. No. 2
TRAVIS COUNTY, TEXAS

WASTEWATER TREATMENT PLANT EXPANSION TO 1.5 MGD

SLUDGE HOLDING TANK SECTIONS

QUIDDITY
Texas Board of Professional Engineers and Land Surveyors Reg. No. F-23290
912 South Capital of Texas Hwy, Suite 300 • Austin, TX 78746 • 512.441.9493

SCALE:	AS SHOWN	DGN. BY:	JZYLBERBERG
DATE:	MARCH 2026	DWN. BY:	SSOMERS
JOB NO.	0A651-0021-02	DWG. NO.	
SUBMITTED:		SURV. BY:	
		F.B. NO.	

STATE OF TEXAS — JORDAN ZYLBERBERG — 142350 — LICENSED PROFESSIONAL ENGINEER — 3/10/26

13-M-2

SHEET NO. 101 OF 230

C:\Users\asalgado\DC\ACCDocs\Quiddity - Water-\0A651-0021-02 _ WILBARGER WWTP EXP. 1.5 MGD\Project Files\PLANS\MECH-A13.dwg, Mar 10, 2026 - 5:33pm, asalgado

ORIGINAL SCALE IN INCHES FOR REDUCED PLANS

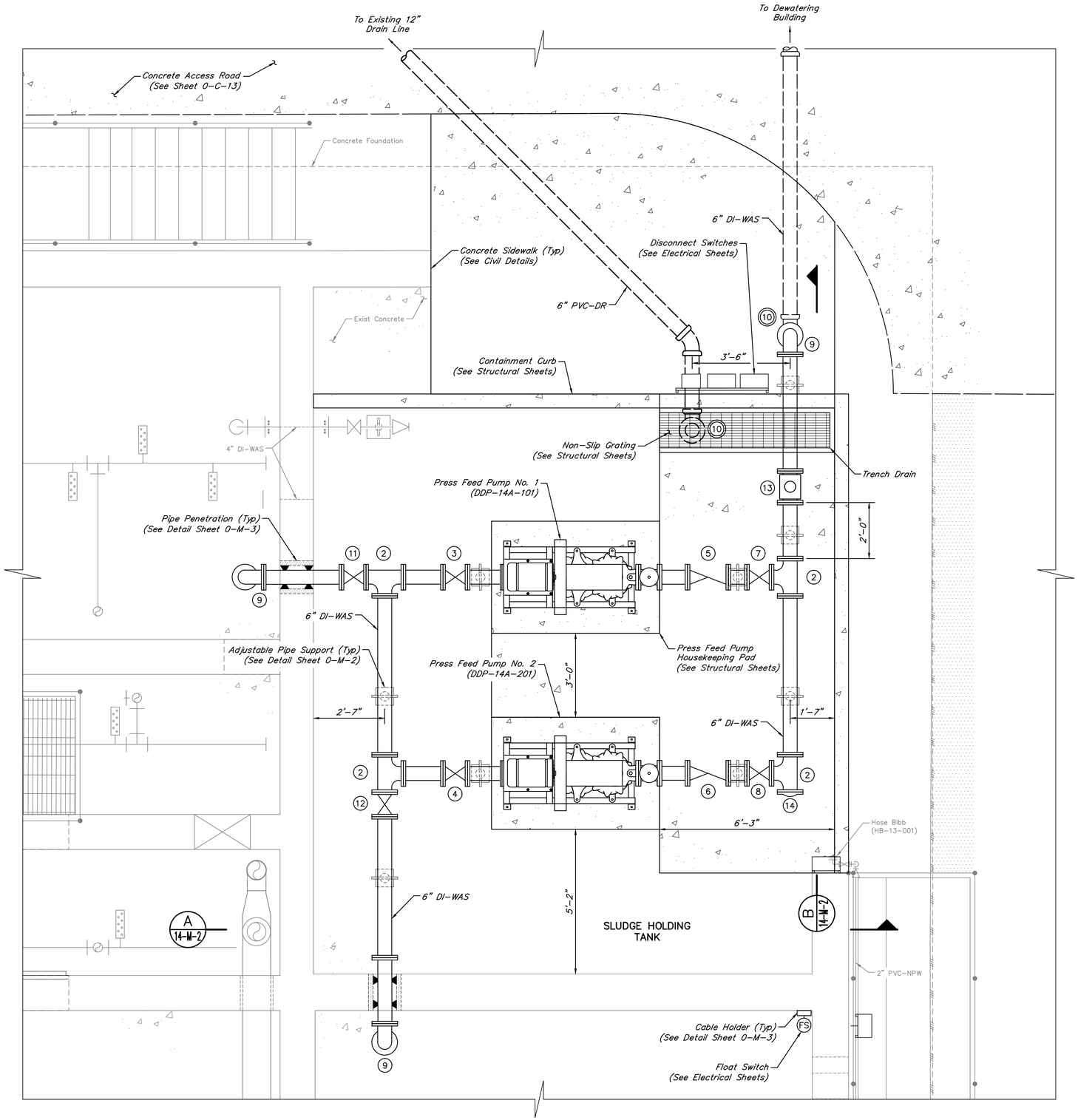

0 .5 1 2 4 6

SCALE: 1/2" = 1'

VALVES, FITTINGS, AND ACCESSORIES SCHEDULE

No.	DESCRIPTION
1	6" 90° Bend Flare, FJ
2	6" x 6" Tee, FJ
3	6" Plug Valve (PV-14A-101)
4	6" Plug Valve (PV-14A-201)
5	6" Swing Check Valve (SCV-14A-101)
6	6" Swing Check Valve (SCV-14A-201)
7	6" Plug Valve (PV-14A-102)
8	6" Plug Valve (PV-14A-202)
9	6" 90° Bend, FJ
10	6" 90° Bend, MJ
11	6" Plug Valve (PV-14A-103)
12	6" Plug Valve (PV-14A-203)
13	6" Magnetic Flowmeter, FJ (FM-14A-001)
14	6" Blind Flange

◎ Indicates Restrained Valve or Fitting.

NOTES:

1. Contractor shall coordinate any downtime required for piping penetrations with other sludge holding tank improvements to avoid extended outages.

NO.	DATE	REVISIONS	APP.

WILBARGER CREEK M.U.D. No. 2
TRAVIS COUNTY, TEXAS

WASTEWATER TREATMENT PLANT EXPANSION TO 1.5 MGD

DEWATERING PRESS FEED PUMPS

QUIDDITY
Texas Board of Professional Engineers and Land Surveyors Reg. No. F-23290
912 South Capital of Texas Hwy, Suite 300 • Austin, TX 78746 • 512.441.9493

SCALE: 1/2" = 1'-0" DGN. BY:
DATE: FEBRUARY 2026 DWN. BY: JSTRUHAR
JOB NO. 0A651-0021-02 DWG. NO.
SUBMITTED: SURV. BY:
F.B. NO.

STATE OF TEXAS
JORDAN ZYLBERBERG
142350
LICENSED PROFESSIONAL ENGINEER
3/10/26

14-M-1
SHEET NO. 102 OF 230

C:\Users\JAS\DC\ACCDocs\Quiddity\0A651-0021-02 _ WILBARGER WWTP EXP. 1.5 MGD\Project Files\PLANS\MECH-A14.dwg, Feb 19, 2026 - 12:10pm, JAS

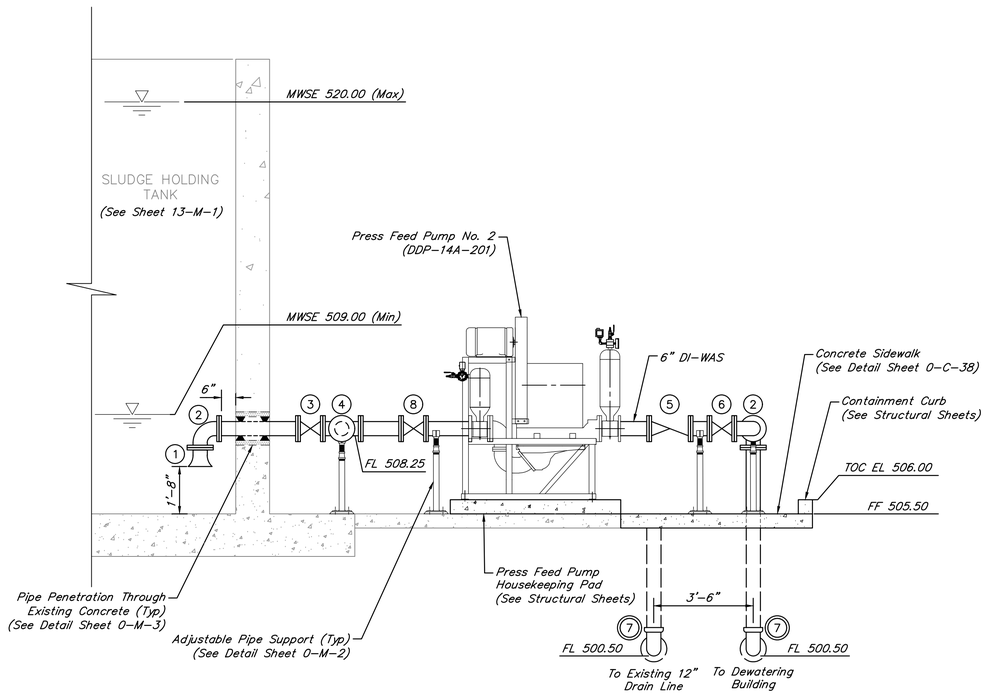

A 14-M-1 **DEWATERING PRESS FEED PUMP SECTION**
SCALE: 3/8" = 1'-0"

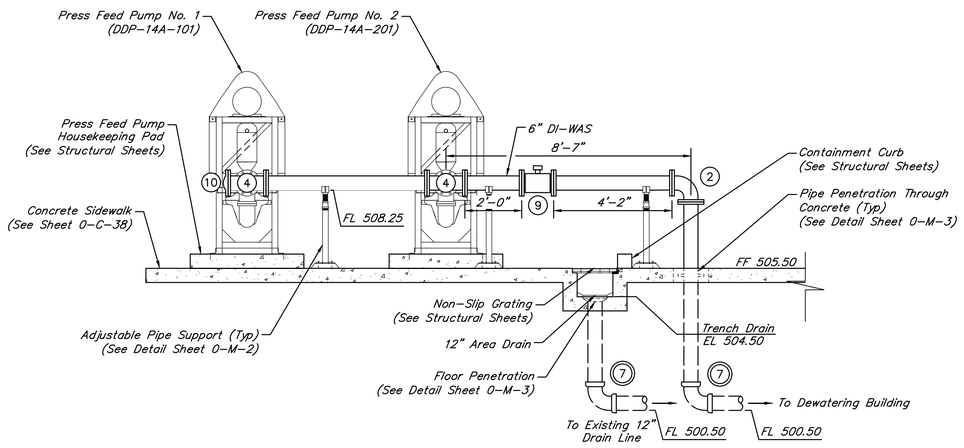

B 14-M-1 **DEWATERING PRESS FEED PUMP SECTION**
SCALE: 3/8" = 1'-0"

0 1 2 3 6
SCALE: 3/8"=1'

VALVES, FITTINGS, AND ACCESSORIES SCHEDULE

No.	DESCRIPTION
(1)	6" 90° Bend Flare, FJ
(2)	6" 90° Bend, FJ
(3)	6" Plug Valve (PV-14A-103)
(4)	6" x 6" Tee, FJ
(5)	6" Swing Check Valve (SCV-14A-201)
(6)	6" Plug Valve (PV-14A-202)
(7)	6" 90° Bend, MJ
(8)	6" Plug Valve (PV-14A-201)
(9)	6" Magnetic Flowmeter, FJ (FM-14A-101)
(10)	6" Blind Flange
◎	Indicates Restrained Valve or Fitting.

NOTES:

1. Contractor shall coordinate any downtime required for piping penetrations with other sludge holding tank improvements to avoid extended outages.

NO.	DATE	REVISIONS	APP.

WILBARGER CREEK M.U.D. No. 2
TRAVIS COUNTY, TEXAS

WASTEWATER TREATMENT PLANT EXPANSION TO 1.5 MGD

DEWATERING PRESS FEED PUMPS SECTIONS

QUIDDITY
Texas Board of Professional Engineers and Land Surveyors Reg. No. F-23290
912 South Capital of Texas Hwy, Suite 300 • Austin, TX 78746 • 512.441.9493

SCALE: 3/8" = 1'-0" DGN. BY: JZ
DATE: FEBRUARY 2026 DWN. BY: JSTRUHAR
JOB NO. 0A651-0021-02 DWG. NO.
SUBMITTED: SURV. BY:
F.B. NO.

STATE OF TEXAS
JORDAN ZYLBERBERG
142350
LICENSED PROFESSIONAL ENGINEER
3/10/26

14-M-2
SHEET NO. 103 OF 230

0 1 2 3 4 5

ORIGINAL SCALE IN INCHES FOR REDUCED PLANS

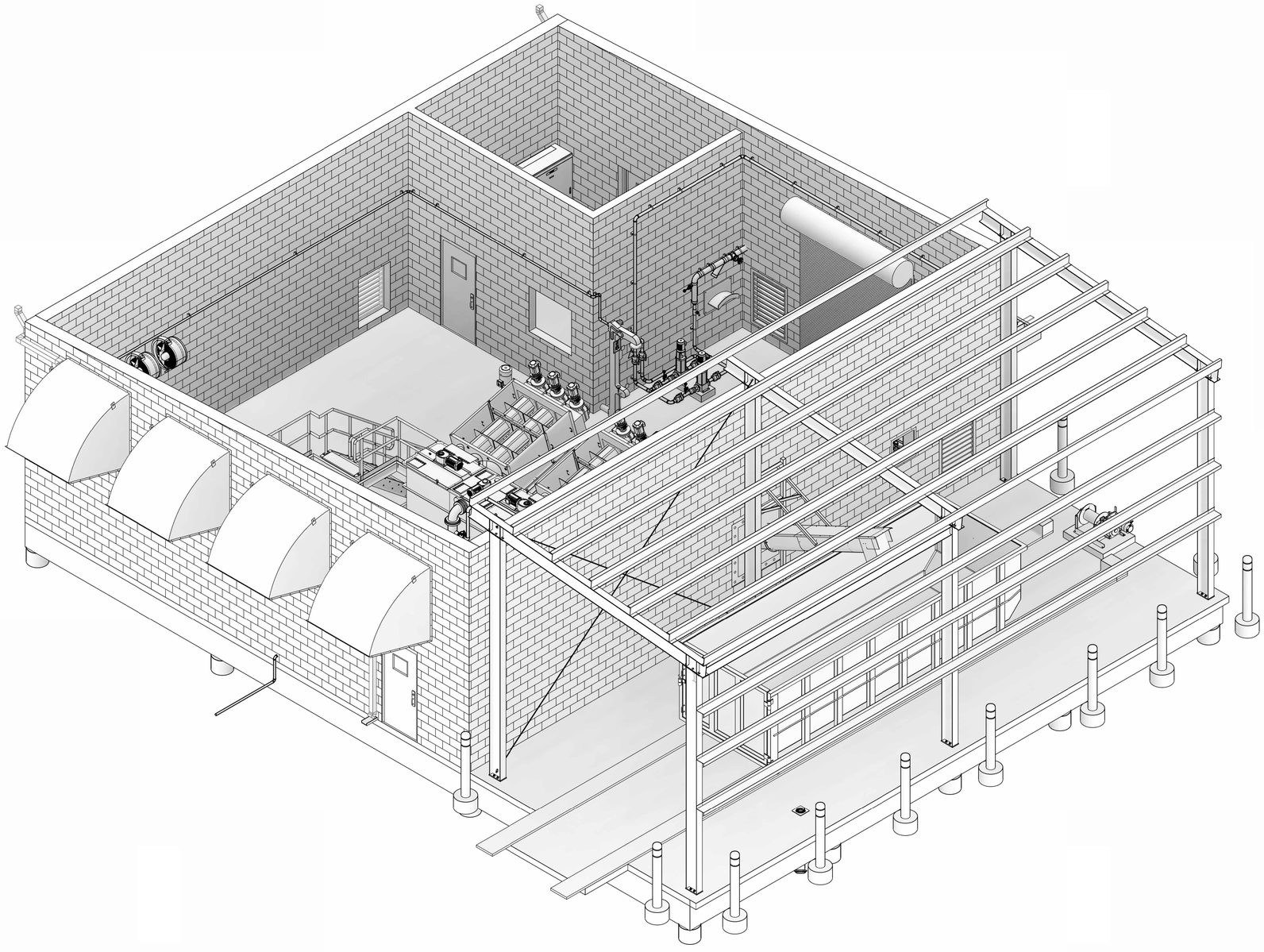

1 DEWATERING BUILDING ISOMETRIC

NO.	DATE	REVISIONS	APP.

WILBARGER CREEK M.U.D. No. 2
TRAVIS COUNTY, TEXAS

WASTEWATER TREATMENT PLANT EXPANSION TO 1.5 MGD

DEWATERING BUILDING ISOMETRIC

QUIDDITY
Texas Board of Professional Engineers and Land Surveyors Reg. No. F-23290
912 South Capital of Texas Hwy, Suite 300 Austin, TX 78746 512.441.9493

SCALE:
DATE: DECEMBER 2025
JOB NO. 0A651-0021-02
SUBMITTED:

DGN. BY: ABM
DWN. BY: MP
DWG. NO. 14-M-3
SURV. BY:
F.B. NO.

STATE OF TEXAS
JORDAN ZYLBERBERG
142350
LICENSED PROFESSIONAL ENGINEER

7/2/26

14-M-3
SHEET NO. 104 OF 230

K:\13889\13889-0016-00 WWTP EXPANSION TO 1.50 MGD FOR HARVEST G\2. DESIGN PHASE\CAD\PLANS\STRUCTURAL.DWG

0 1 2 3 4 5

ORIGINAL SCALE IN INCHES FOR REDUCED PLANS

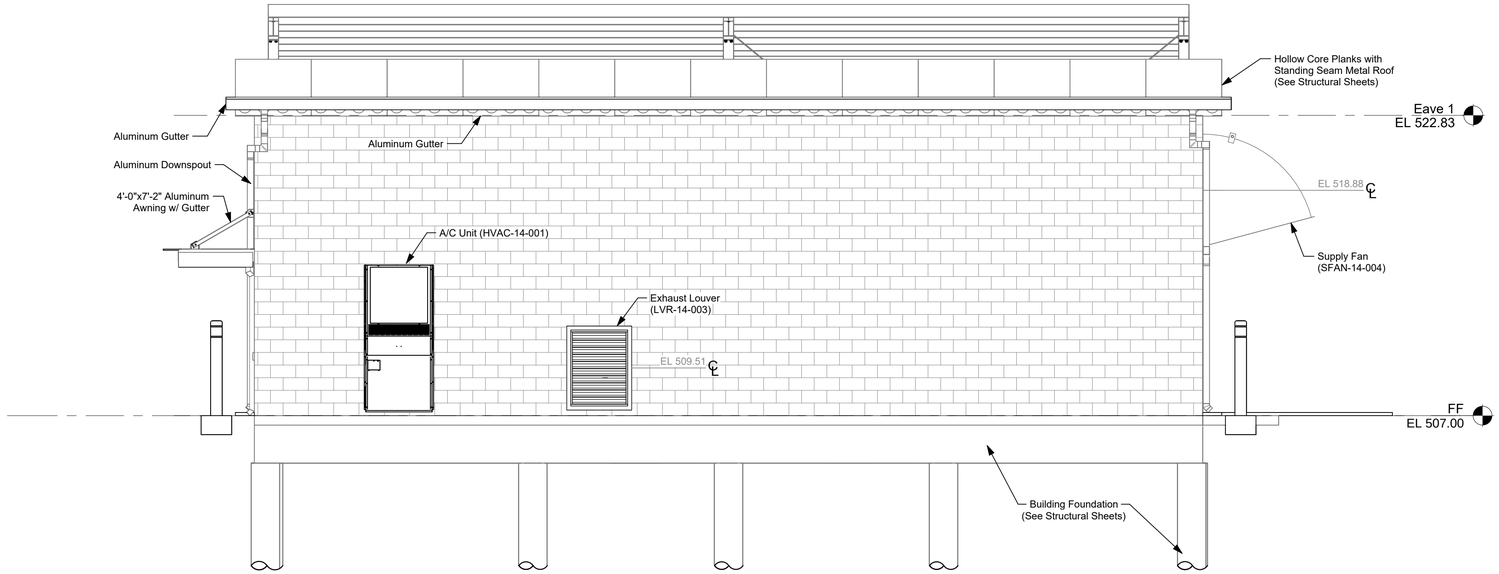

1 ELEVATION EAST
1/4" = 1'-0"

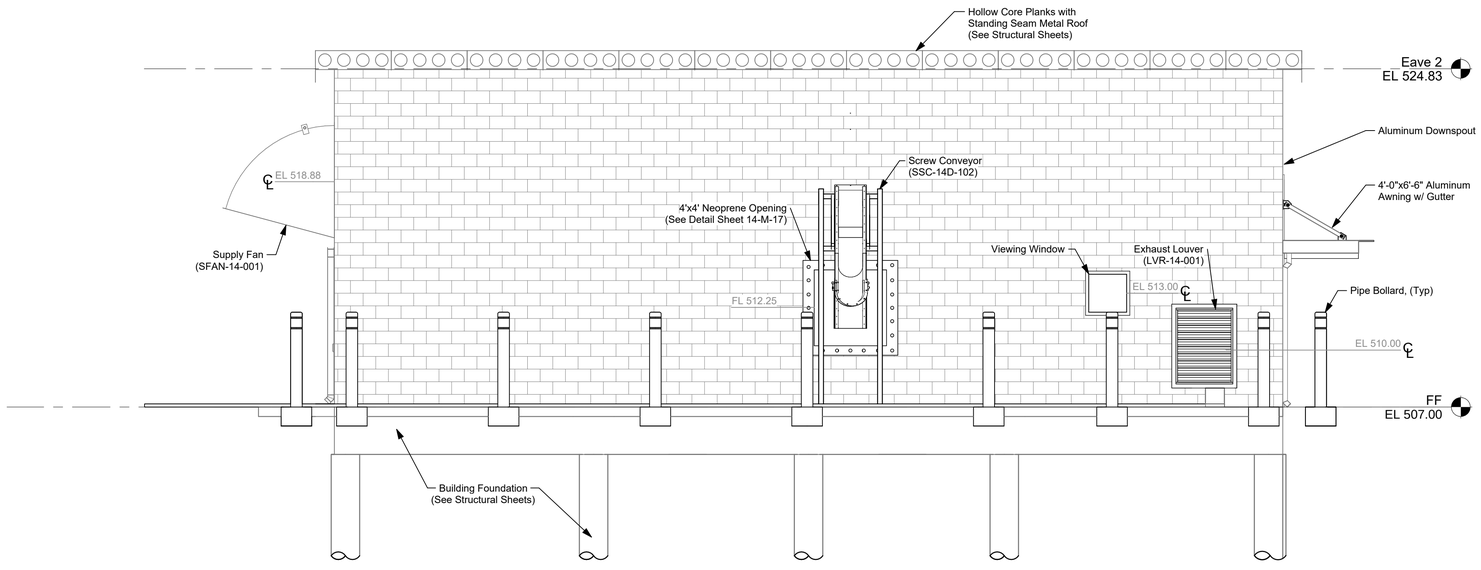

2 ELEVATION WEST
1/4" = 1'-0"

0 1 2 4 8 12

SCALE: 1/4" = 1' - 0"

NOTES:

1. Contractor to ensure aluminum downspout is constructed so that it shall drain within the proposed Drainage Area B-1 only, see Sheet 0-C-29 for reference.
2. Aluminum downspout and gutter shall be sized by the Vendor in accordance with the 100-Year storm event.

NO.	DATE	REVISIONS	APP.

WILBARGER CREEK M.U.D. No. 2
TRAVIS COUNTY, TEXAS

WASTEWATER TREATMENT PLANT EXPANSION TO 1.5 MGD

DEWATERING BUILDING ELEVATIONS - SHEET 1 OF 2

QUIDDITY
Texas Board of Professional Engineers and Land Surveyors Reg. No. F-23290
912 South Capital of Texas Hwy, Suite 300 Austin, TX 78746 512.441.9493

SCALE:	1/4" = 1'-0"	DGN. BY:	ABM
DATE:	02/02/26	DWN. BY:	MP
JOB NO.	0A651-0021-02	DWG. NO.	14-M-4
SUBMITTED:		SURV. BY:	
		F.B. NO.	

STATE OF TEXAS
JORDAN ZYLBERBERG
142360
LICENSED PROFESSIONAL ENGINEER
7/2/26

14-M-4
SHEET NO. 105 OF 230

K:\13889\13889-0016-00 WWTP EXPANSION TO 1.50 MGD FOR HARVEST G\2. DESIGN PHASE\CAD\PLANS\STRUCTURAL.DWG

0 1 2 3 4 5

ORIGINAL SCALE IN INCHES FOR REDUCED PLANS

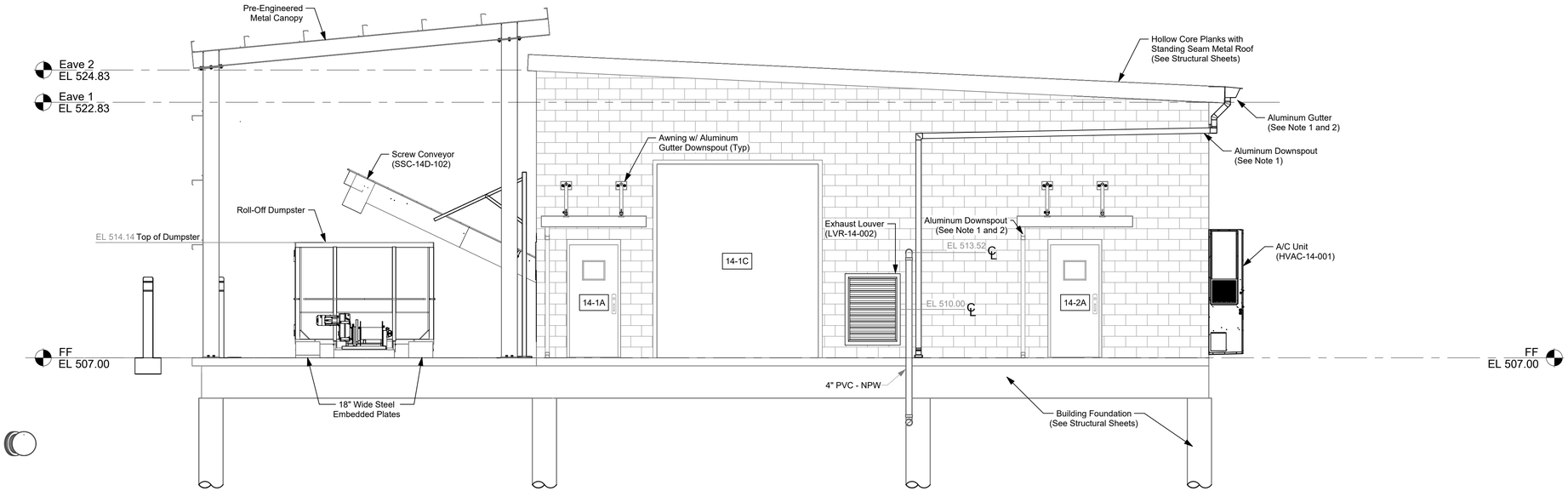

1 ELEVATION SOUTH
1/4" = 1'-0"

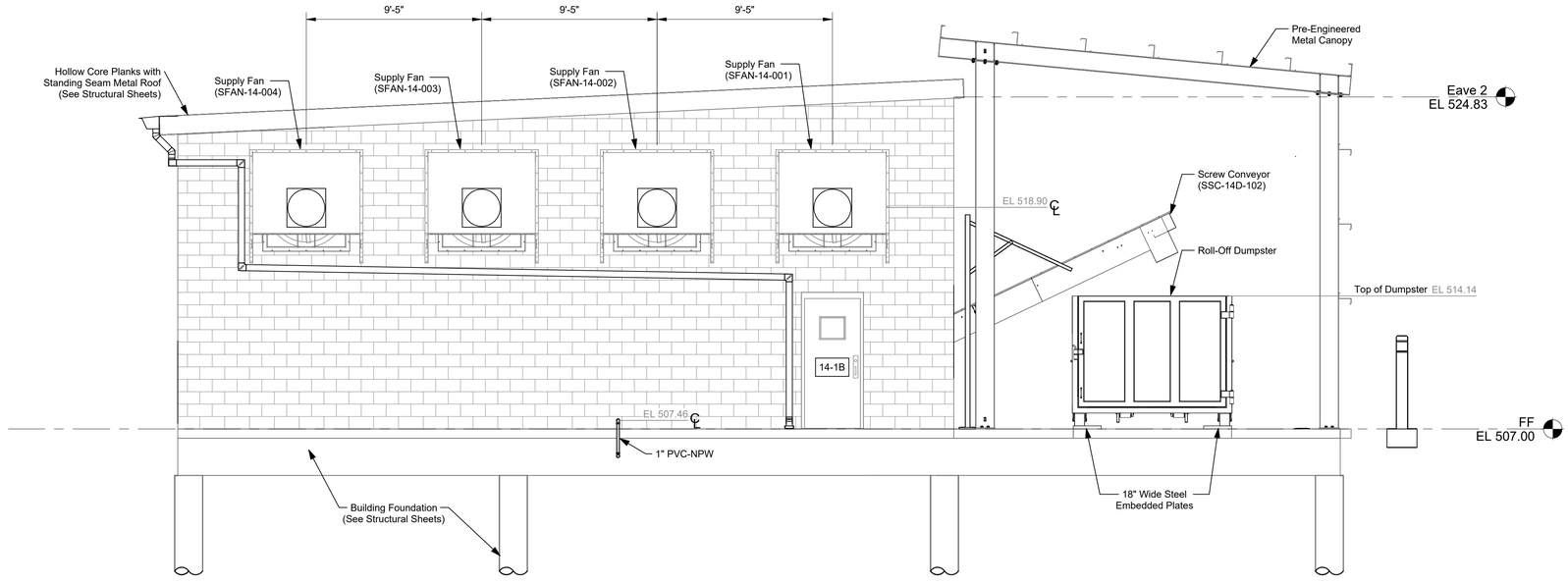

2 ELEVATION NORTH
1/4" = 1'-0"

0 1 2 4 8 12

SCALE: 1/4" = 1' - 0"

NOTES:

1. Contractor to ensure aluminum downspout is constructed so that it shall drain within the proposed Drainage Area B-1 only, see Sheet 0-C-29 for reference.
2. Aluminum downspout and gutter shall be sized by the Vendor in accordance with the 100-Year storm event.

NO.	DATE	REVISIONS	APP.

WILBARGER CREEK M.U.D. No. 2
TRAVIS COUNTY, TEXAS

WASTEWATER TREATMENT PLANT EXPANSION TO 1.5 MGD

DEWATERING BUILDING ELEVATIONS - SHEET 2 OF 2

QUIDDITY
Texas Board of Professional Engineers and Land Surveyors Reg. No. F-23290
912 South Capital of Texas Hwy, Suite 300 Austin, TX 78746 512.441.9493

SCALE:	1/4" = 1'-0"	DGN. BY:	ABM
DATE:	02/02/26	DWN. BY:	MP
JOB NO.	0A651-0021-02	DWG. NO.	14-M-5
SUBMITTED:		SURV. BY:	
		F.B. NO.	

STATE OF TEXAS
JORDAN ZYLBERBERG
142360
LICENSED PROFESSIONAL ENGINEER

7/2/26

14-M-5
SHEET NO. 106 OF 230

K:\13889\13889-0016-00 WWTP EXPANSION TO 1.50 MGD FOR HARVEST G\2. DESIGN PHASE\CAD\PLANS\STRUCTURAL.DWG

ORIGINAL SCALE IN INCHES FOR REDUCED PLANS

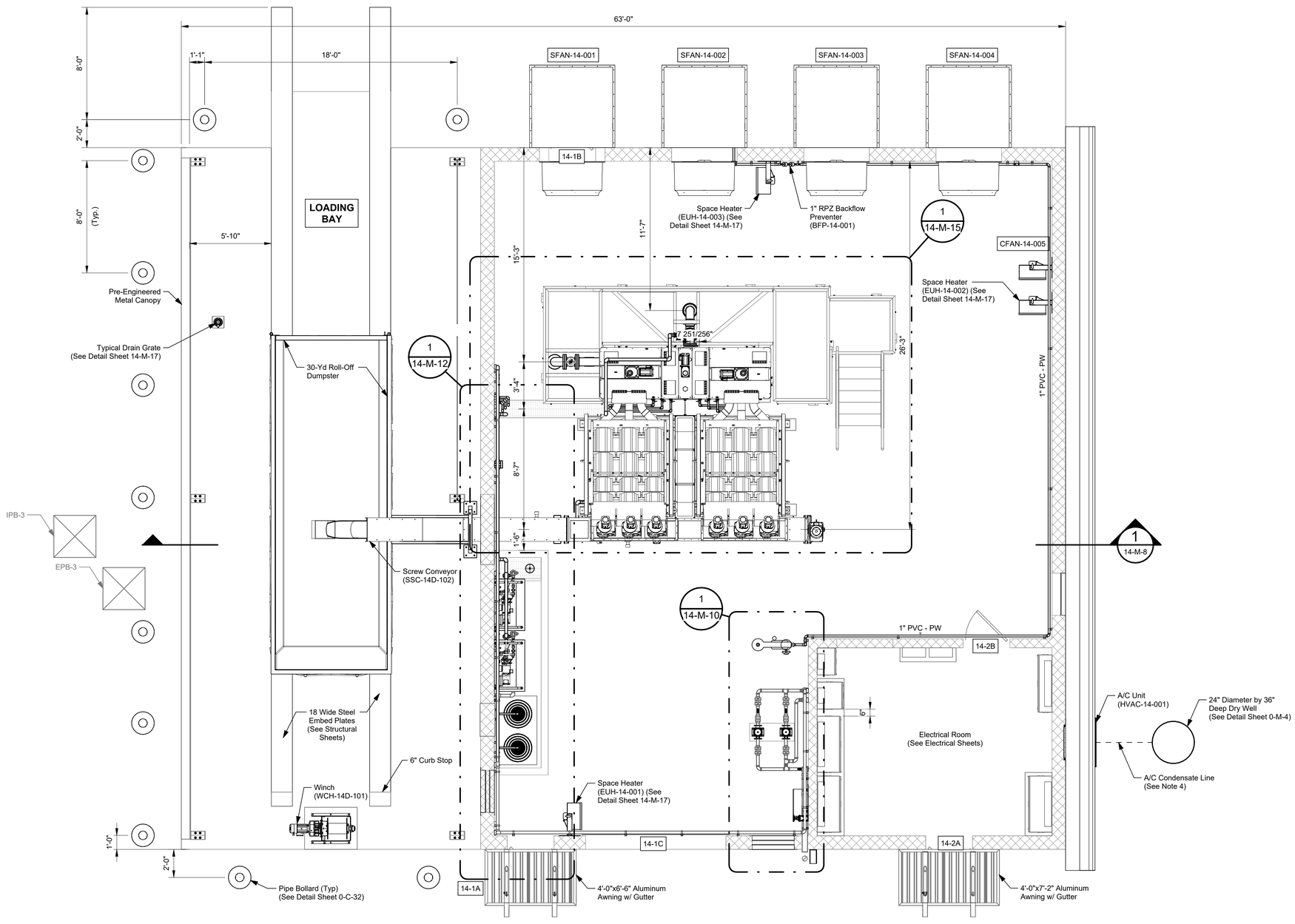

1 14-M-6 DEWATERING BUILDING PLAN
1/4" = 1'-0"

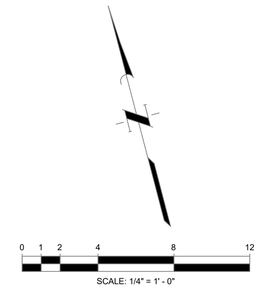

NOTES:

1. Mount all small diameter piping to walls with stainless steel unistrut & stainless steel hardware. The maximum distance between supports shall be 5'-0".
2. 3" diameter and smaller valves, fittings, and accessories not labeled. See P&IDs for valves.
3. Insulate all above ground piping in accordance with Specification Section 15226.
4. Contractor to route A/C Condensate Line down the wall and to the Dry Well.

NO.	DATE	REVISIONS	APP.

WILBARGER CREEK M.U.D. No. 2
TRAVIS COUNTY, TEXAS

WASTEWATER TREATMENT PLANT EXPANSION TO 1.5 MGD

DEWATERING BUILDING PLAN

QUIDDITY
Texas Board of Professional Engineers and Land Surveyors Reg. No. F-23290
912 South Capital of Texas Hwy, Suite 300 Austin, TX 78746 512.441.9493

SCALE:	1/4" = 1'-0"	DGN. BY:	ABM
DATE:	DECEMBER 2025	DWN. BY:	MP
JOB NO.	0A651-0021-02	DWG. NO.	14-M-6
SUBMITTED:		SURV. BY:	
		F.B. NO.	

STATE OF TEXAS
JORDAN ZYLBERBERG
142360
LICENSED PROFESSIONAL ENGINEER
7/2/26

14-M-6
SHEET NO. 107 OF 230

K:\13889\13889-0016-00 WWTP EXPANSION TO 1.50 MGD FOR HARVEST G\2. DESIGN PHASE\CAD\PLANS\STRUCTURAL.DWG

ORIGINAL SCALE IN INCHES FOR REDUCED PLANS

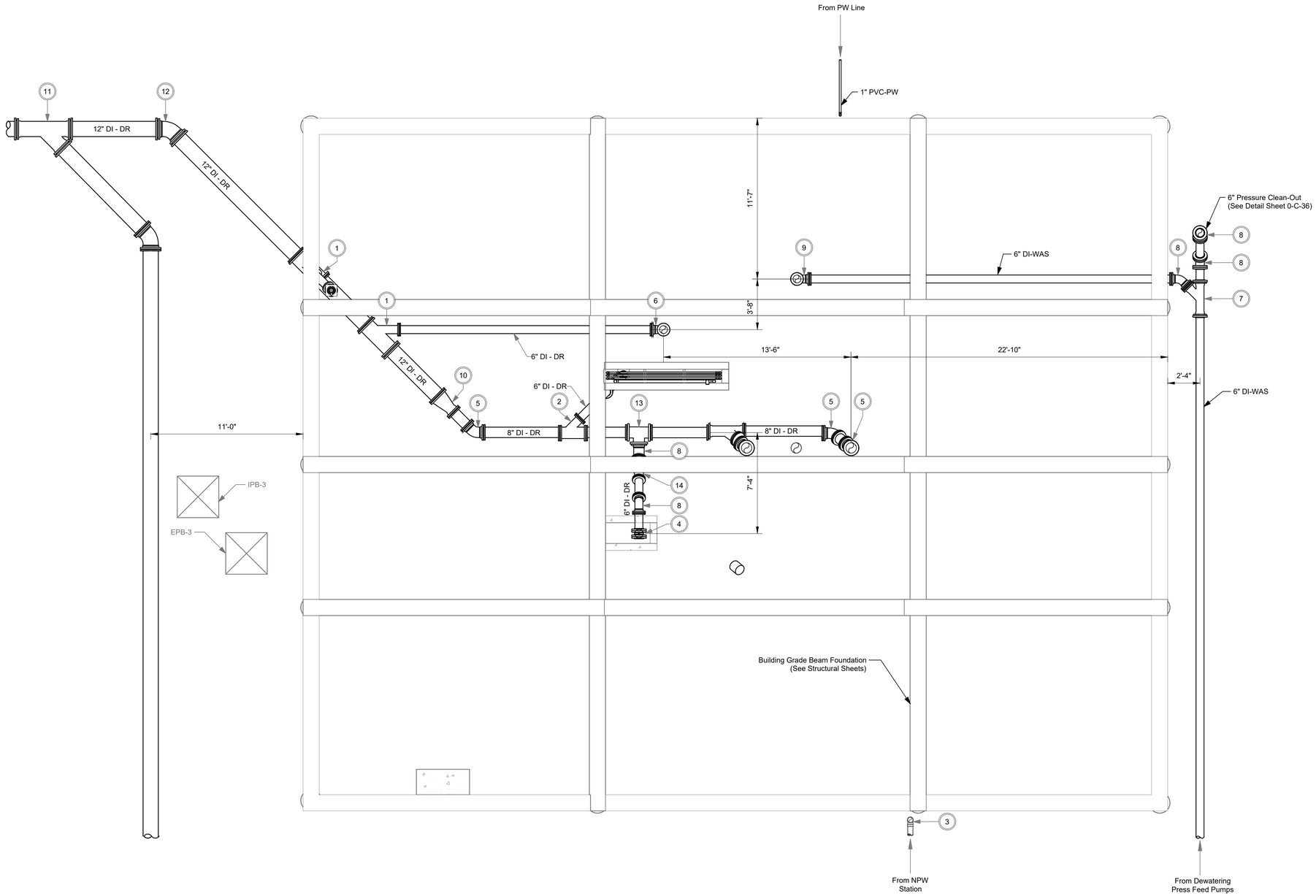

1 / 14-M-7 DEWATERING BUILDING UNDERGROUND PLAN
1/4" = 1'-0"

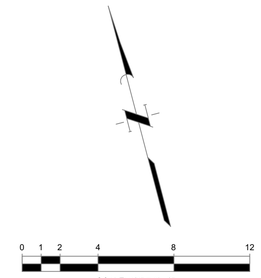

VALVES, FITTINGS, AND ACCESSORIES SCHEDULE	
NO.	DESCRIPTIONS
1	12" x 6" Wye, MJ
2	8" x 6" Wye, MJ
3	4" 90° Bend, MJ
4	6" Butterfly Valve, (BFV-14C-001)
5	8" 45° Bend, MJ
6	6" 90° Bend, MJ
7	6" WYE, MJ
8	6" 45° Bend, MJ
9	6" 90° Bend, MJ
10	12" x 8" Reducer, MJ
11	12" Wye, MJ
12	12" 45° Bend, MJ
13	8" Tee, MJ
14	8" x 6" Reducer, MJ

Indicates Restrained Valve or Fitting

NOTES:

1. Mount all small diameter piping to walls with stainless steel unistrut & stainless steel hardware. The maximum distance between supports shall be 5'-0".
2. 3" diameter and smaller valves, fittings, and accessories not labeled. See P&IDs for valves.
3. Insulate all above ground piping in accordance with Specification Section 15226.

NO.	DATE	REVISIONS	APP.

WILBARGER CREEK M.U.D. No. 2
TRAVIS COUNTY, TEXAS

WASTEWATER TREATMENT PLANT EXPANSION TO 1.5 MGD

DEWATERING BUILDING UNDERGROUND PLAN

QUIDDITY
Texas Board of Professional Engineers and Land Surveyors Reg. No. F-23290
912 South Capital of Texas Hwy, Suite 300 Austin, TX 78746 512.441.9493

SCALE:	As indicated	DGN. BY:	ABM
DATE:	DECEMBER 2025	DWN. BY:	MP
JOB NO.	0A651-0021-02	DWG. NO.	14-M-7
SUBMITTED:		SURV. BY:	
		F.B. NO.	

STATE OF TEXAS
JORDAN ZYLBERBERG
142350
LICENSED PROFESSIONAL ENGINEER
7/2/26

14-M-7
SHEET NO. 108 OF 230

K:\13889\13889-0016-00 WWTP EXPANSION TO 1.50 MGD FOR HARVEST GI2. DESIGN PHASE\CAD\PLANS\STRUCTURAL.DWG

0 1 2 3 4 5

ORIGINAL SCALE IN INCHES FOR REDUCED PLANS

NOTES:

1. Mount all small diameter piping to walls with stainless steel unistrut & stainless steel hardware. The maximum distance between supports shall be 5'-0".
2. 3" diameter and smaller valves, fittings, and accessories not labeled. See P&IDs for valves
3. Insulate all above ground piping in accordance with Specification Section 15226.

VALVES, FITTINGS, AND ACCESSORIES SCHEDULE	
NO.	DESCRIPTIONS
1	6" 45° Bend, MJ
2	8" x 6" Reducer, MJ
3	8" Tee, MJ
4	6" 90° Bend, MJ
5	8" 45° Bend, MJ
6	12" x 8" Reducer, MJ
7	12" x 6" Wye, MJ
8	6" WYE, MJ
9	8" WYE, MJ

○ Indicates Restrained Valve or Fitting

0 1 2 4 8 12

SCALE: 1/4" = 1' - 0"

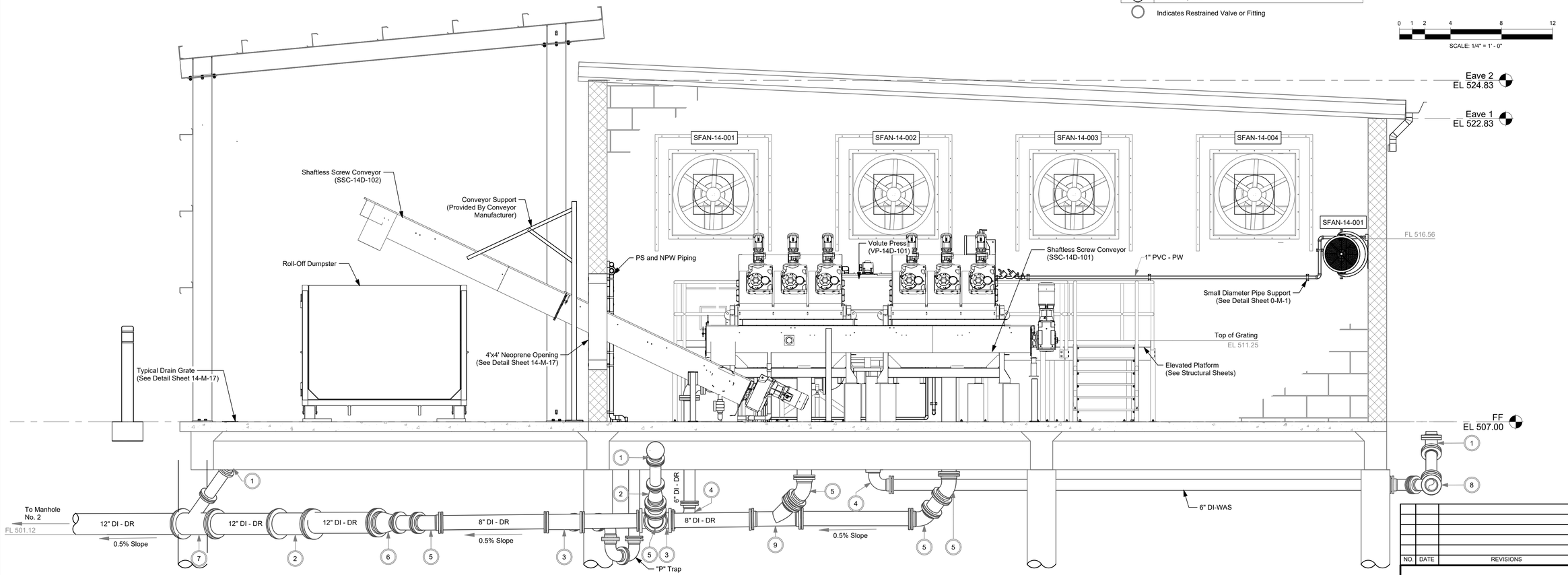

1 / 14-M-8 DEWATERING BUILDING SECTION

3/8" = 1'-0"

NO.	DATE	REVISIONS	APP.

WILBARGER CREEK M.U.D. No. 2
TRAVIS COUNTY, TEXAS

WASTEWATER TREATMENT PLANT EXPANSION TO 1.5 MGD

DEWATERING BUILDING SECTIONS

QUIDDITY
Texas Board of Professional Engineers and Land Surveyors Reg. No. F-23290
912 South Capital of Texas Hwy, Suite 300 · Austin, TX 78746 · 512.441.9493

SCALE:	As indicated	DGN. BY:	ABM
DATE:	DECEMBER 2025	DWN. BY:	MP
JOB NO.	0A651-0021-02	DWG. NO.	14-M-8
SUBMITTED:		SURV. BY:	
		F.B. NO.	

STATE OF TEXAS
JORDAN ZYLBERBERG
142350
LICENSED PROFESSIONAL ENGINEER

7/2/26

14-M-8

SHEET NO. 108 OF 230

K:\13889\13889-0016-00 WWTP EXPANSION TO 1.50 MGD FOR HARVEST G\2. DESIGN PHASE\CAD\PLANS\STRUCTURAL.DWG

0 1 2 3 4 5

ORIGINAL SCALE IN INCHES FOR REDUCED PLANS

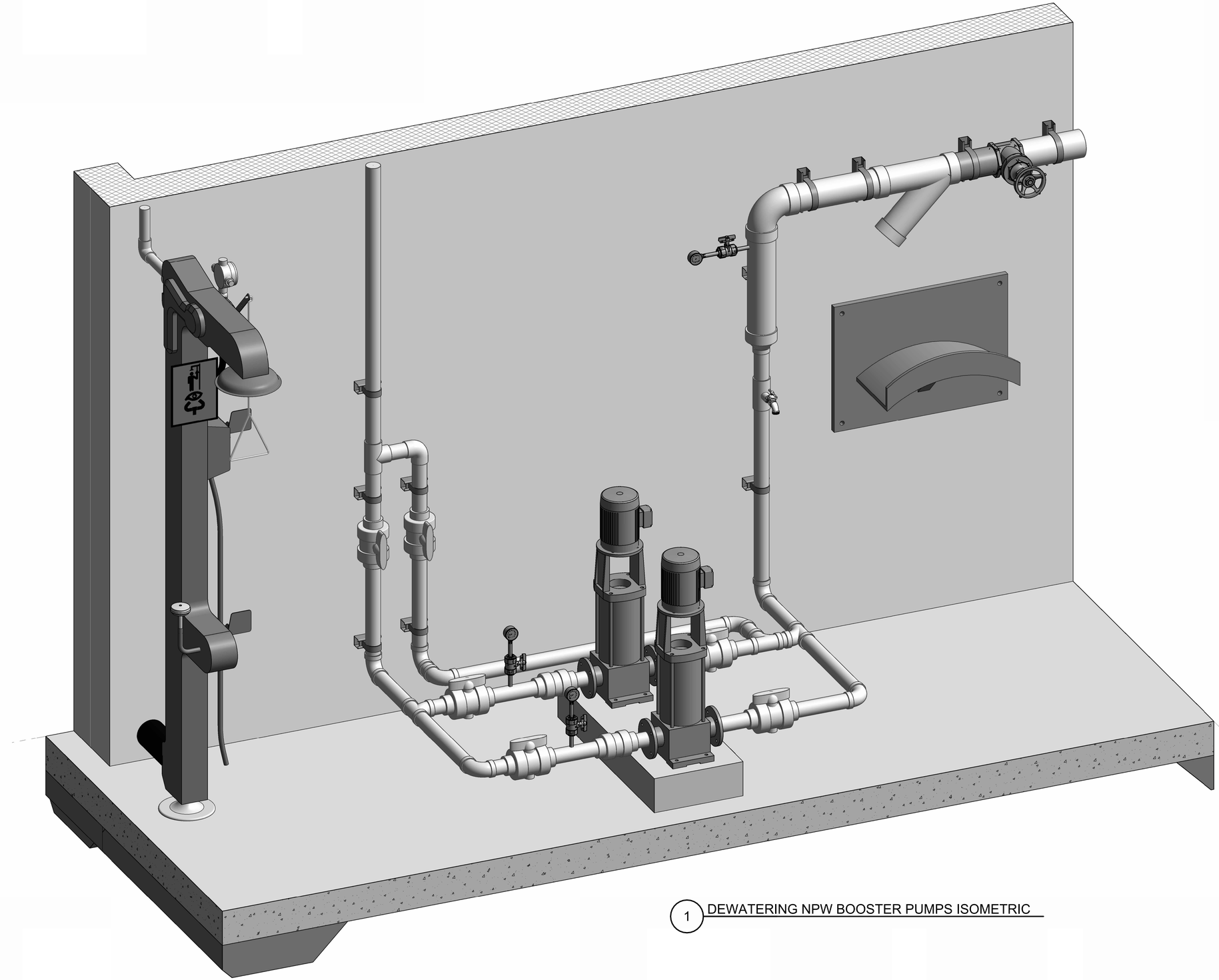

1 DEWATERING NPW BOOSTER PUMPS ISOMETRIC

NO.	DATE	REVISIONS	APP.

WILBARGER CREEK M.U.D. No. 2
TRAVIS COUNTY, TEXAS

WASTEWATER TREATMENT PLANT EXPANSION TO 1.5 MGD

DEWATERING NPW BOOSTER PUMP ISOMETRIC

QUIDDITY
Texas Board of Professional Engineers and Land Surveyors Reg. No. F-23290
912 South Capital of Texas Hwy, Suite 300 Austin, TX 78746 512.441.9493

SCALE:		DGN. BY:	ABM
DATE:	DECEMBER 2025	DWN. BY:	MP
JOB NO.	0A651-0021-02	DWG. NO.	14-M-9
SUBMITTED:		SURV. BY:	
		F.B. NO.	

STATE OF TEXAS
JORDAN ZYLBERBERG
142350
LICENSED PROFESSIONAL ENGINEER
7/2/26

14-M-9
SHEET NO. 110 OF 230

K:\13889\13889-0016-00 WWTP EXPANSION TO 1.50 MGD FOR HARVEST G\2. DESIGN PHASE\CAD\PLANS\STRUCTURAL.DWG

0 1 2 3 4 5
ORIGINAL SCALE IN INCHES FOR REDUCED PLANS

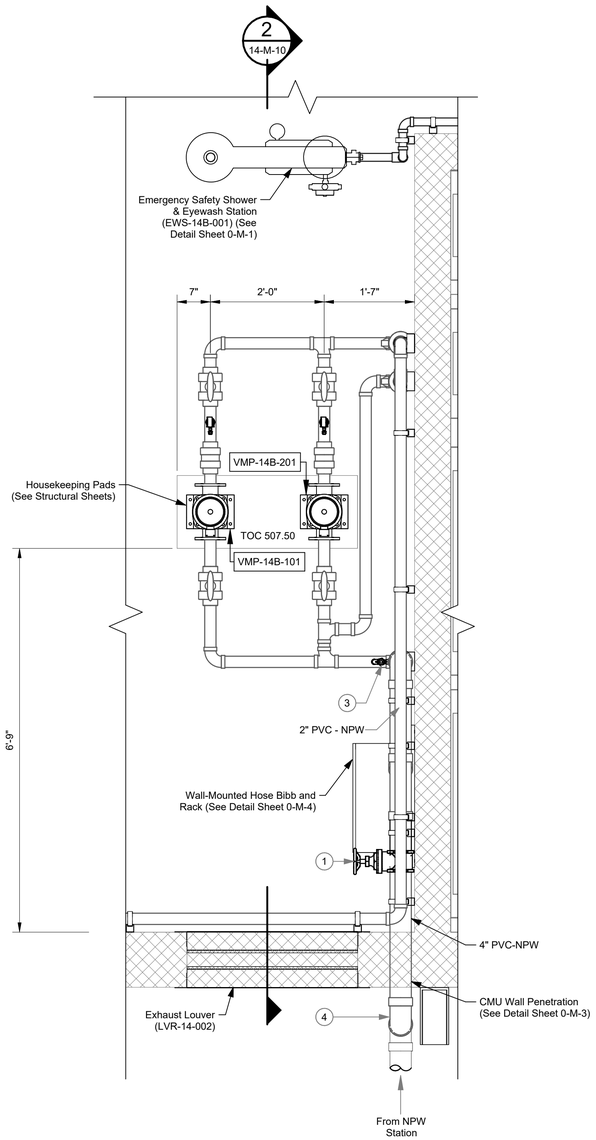

1 14-M-10 NPW BOOSTER PUMP PLAN
3/4" = 1'-0"

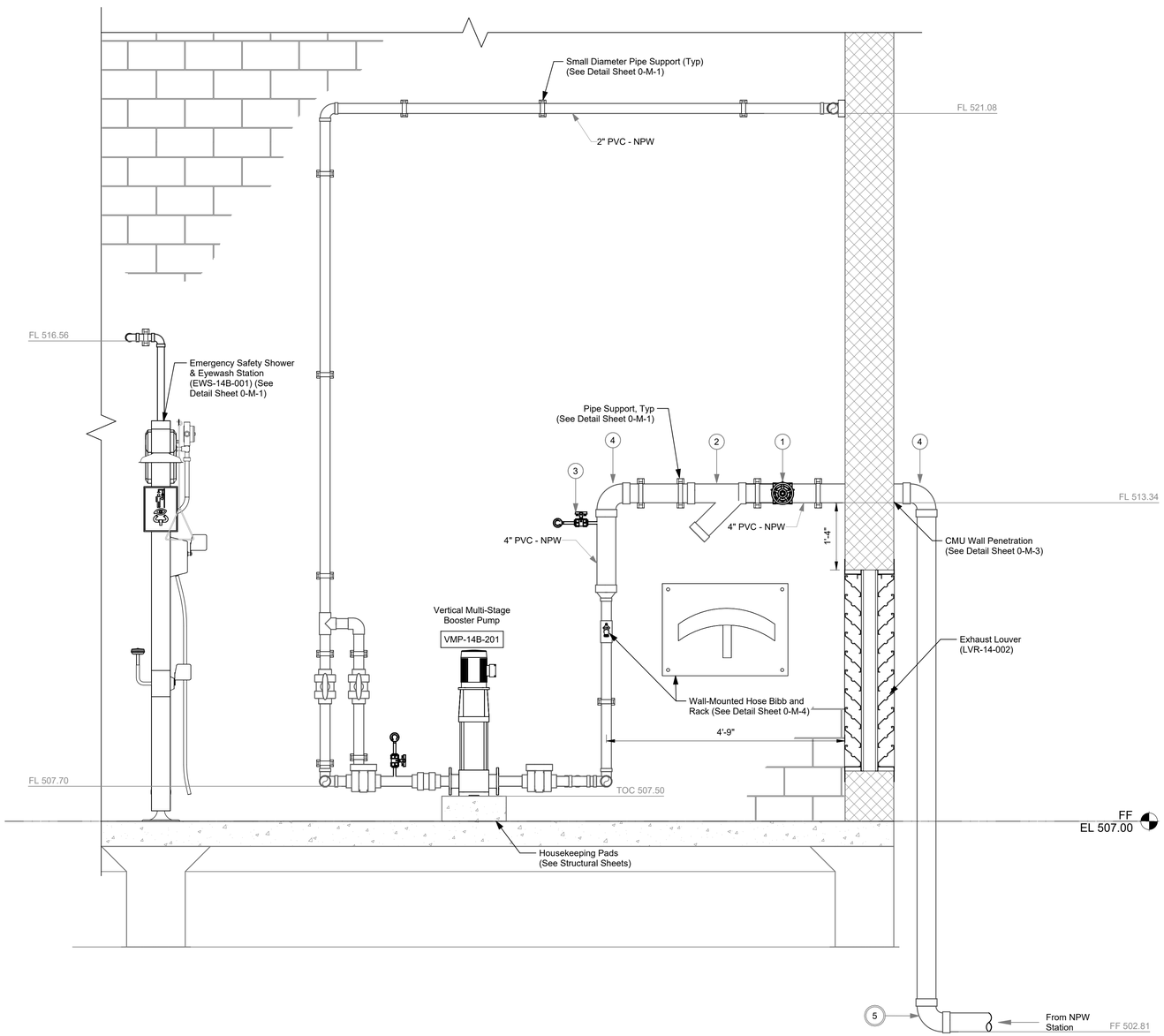

2 14-M-10 SECTION AT NPW BOOSTER PUMP
3/4" = 1'-0"

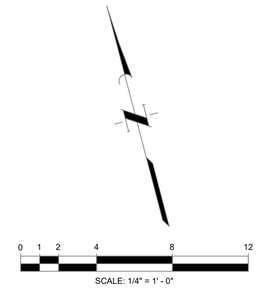

VALVES, FITTINGS, AND ACCESSORIES SCHEDULE	
NO.	DESCRIPTIONS
1	4" Gate Valve (GV-14B-001)
2	4" Wye Strainer (WYS-14B-001)
3	Pressure Indicator & 1/2" Ball Valve (PI-14B001 & BV-14B-003)
4	4" 90° Bend, FJ
5	4" 90° Bend, MJ

○ Indicates Restrained Valve or Fitting

NOTES:

1. Mount all small diameter piping to walls with stainless steel unistrut & stainless steel hardware. The maximum distance between supports shall be 5'-0".
2. 3" diameter and smaller valves, fittings, and accessories not labeled. See P&IDs for valves.
3. Insulate all above ground piping in accordance with Specification Section 15226.

NO.	DATE	REVISIONS	APP.

WILBARGER CREEK M.U.D. No. 2
TRAVIS COUNTY, TEXAS

WASTEWATER TREATMENT PLANT EXPANSION TO 1.5 MGD

DEWATERING NPW BOOSTER PUMP PLAN & SECTIONS

QUIDDITY
Texas Board of Professional Engineers and Land Surveyors Reg. No. F-23290
912 South Capital of Texas Hwy, Suite 300 · Austin, TX 78746 · 512.441.9493

SCALE:	As indicated	DGN. BY:	ABM
DATE:	DECEMBER 2025	DWN. BY:	MP
JOB NO.	0A651-0021-02	DWG. NO.	14-M-10
SUBMITTED:		SURV. BY:	
		F.B. NO.	

STATE OF TEXAS
JORDAN ZYLBERBERG
142350
LICENSED PROFESSIONAL ENGINEER
7/2/26

14-M-10
SHEET NO. 111 OF 230

0 1 2 3 4 5

ORIGINAL SCALE IN INCHES FOR REDUCED PLANS

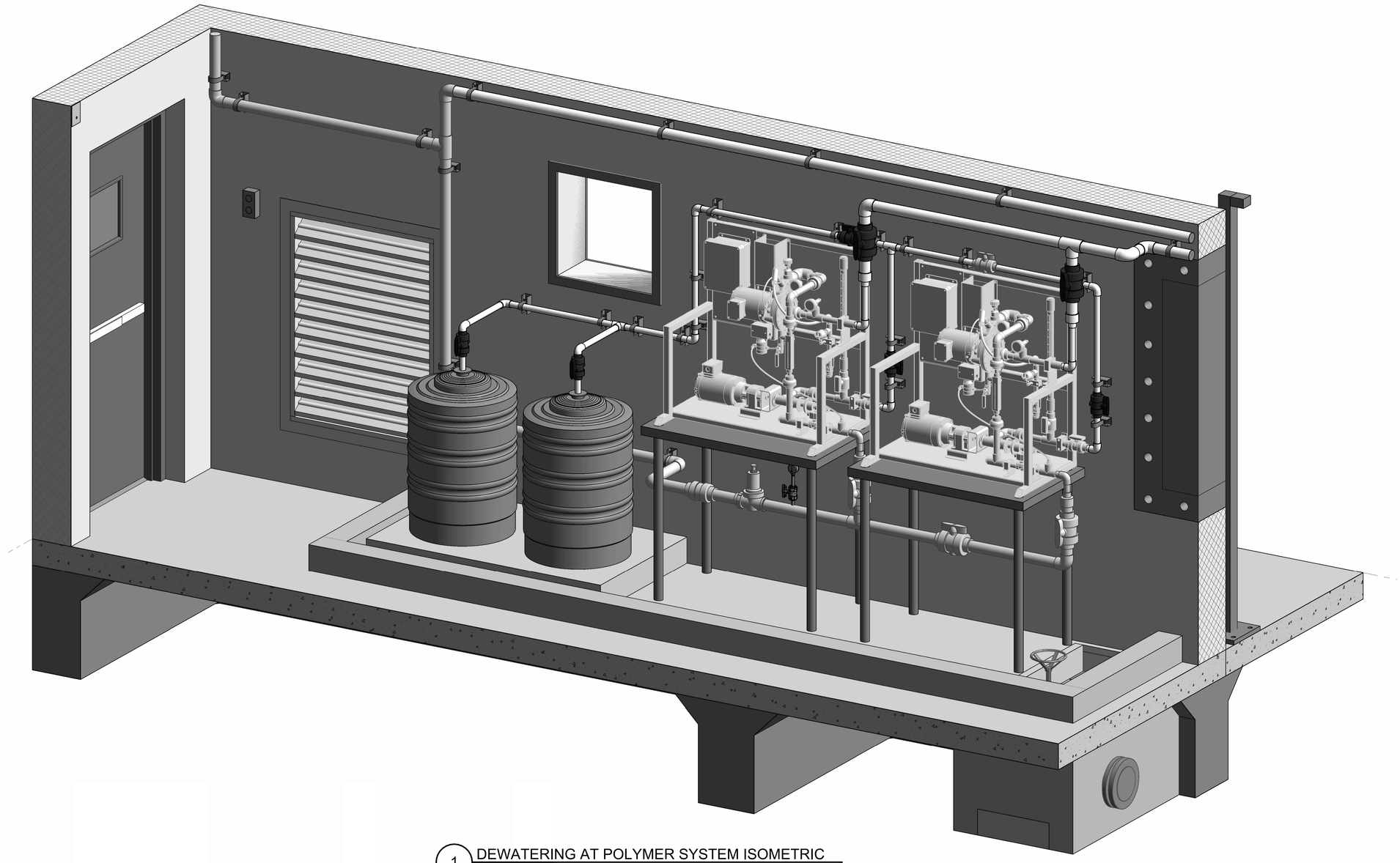

1 DEWATERING AT POLYMER SYSTEM ISOMETRIC

NO.	DATE	REVISIONS	APP.

WILBARGER CREEK M.U.D. No. 2
TRAVIS COUNTY, TEXAS

WASTEWATER TREATMENT PLANT EXPANSION TO 1.5 MGD

DEWATERING POLYMER SYSTEM ISOMETRIC

QUIDDITY
Texas Board of Professional Engineers and Land Surveyors Reg. No. F-23290
912 South Capital of Texas Hwy, Suite 300 Austin, TX 78746 512.441.9493

SCALE:		DGN. BY:	ABM
DATE:	DECEMBER 2025	DWN. BY:	MP
JOB NO.	0A651-0021-02	DWG. NO.	14-M-11
SUBMITTED:		SURV. BY:	
		F.B. NO.	

STATE OF TEXAS
JORDAN ZYLBERBERG
142350
LICENSED PROFESSIONAL ENGINEER
7/2/26

14-M-11
SHEET NO. 112 OF 230

K:\13889\13889-0016-00 WWTP EXPANSION TO 1.50 MGD FOR HARVEST GI2. DESIGN PHASE\CAD\PLANS\STRUCTURAL.DWG

ORIGINAL SCALE IN INCHES FOR REDUCED PLANS

0 1 2 3 4 5

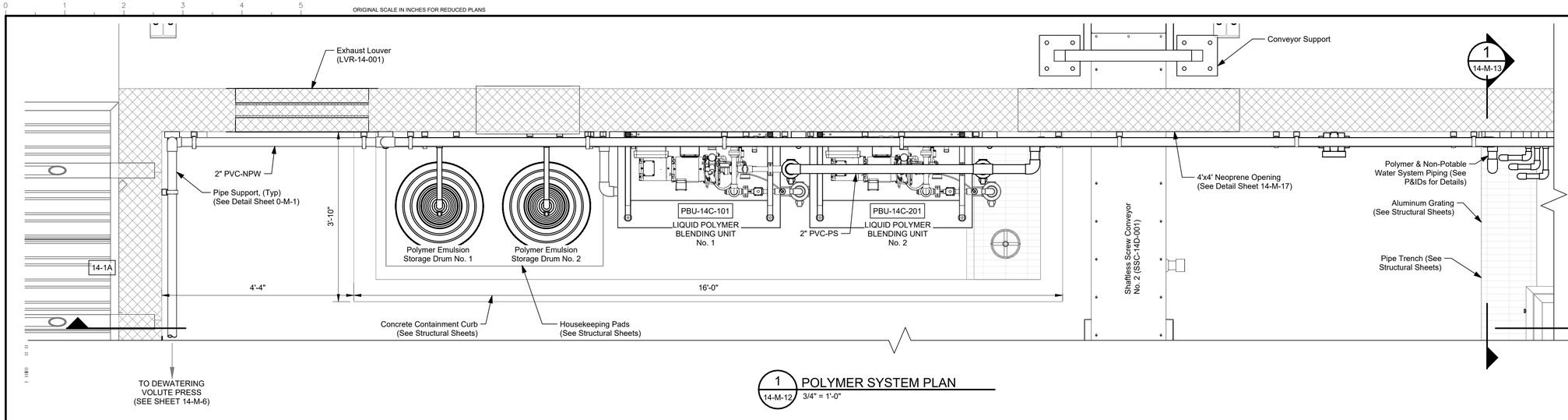

1 14-M-12 POLYMER SYSTEM PLAN
3/4" = 1'-0"

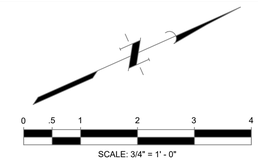

VALVES, FITTINGS, AND ACCESSORIES SCHEDULE	
NO.	DESCRIPTIONS
1	6" 90° Bend, MJ
2	8" x 6" Reducer, MJ
3	6" Butterfly Valve, (BFV-14C-001)
4	6" "P" Trap Drain, MJ
5	6" 45° Bend, MJ
6	8" 45° Bend, MJ

○ Indicates Restrained Valve or Fitting

NOTES:

1. Mount all small diameter piping to walls with stainless steel unistrut & stainless steel hardware. The maximum distance between supports shall be 5'-0".
2. 3" diameter and smaller valves, fittings, and accessories not labeled. See P&IDs for valves.
3. Insulate all above ground piping in accordance with Specification Section 15226.
4. Winch Vendor shall provide mounting hardware for remote.

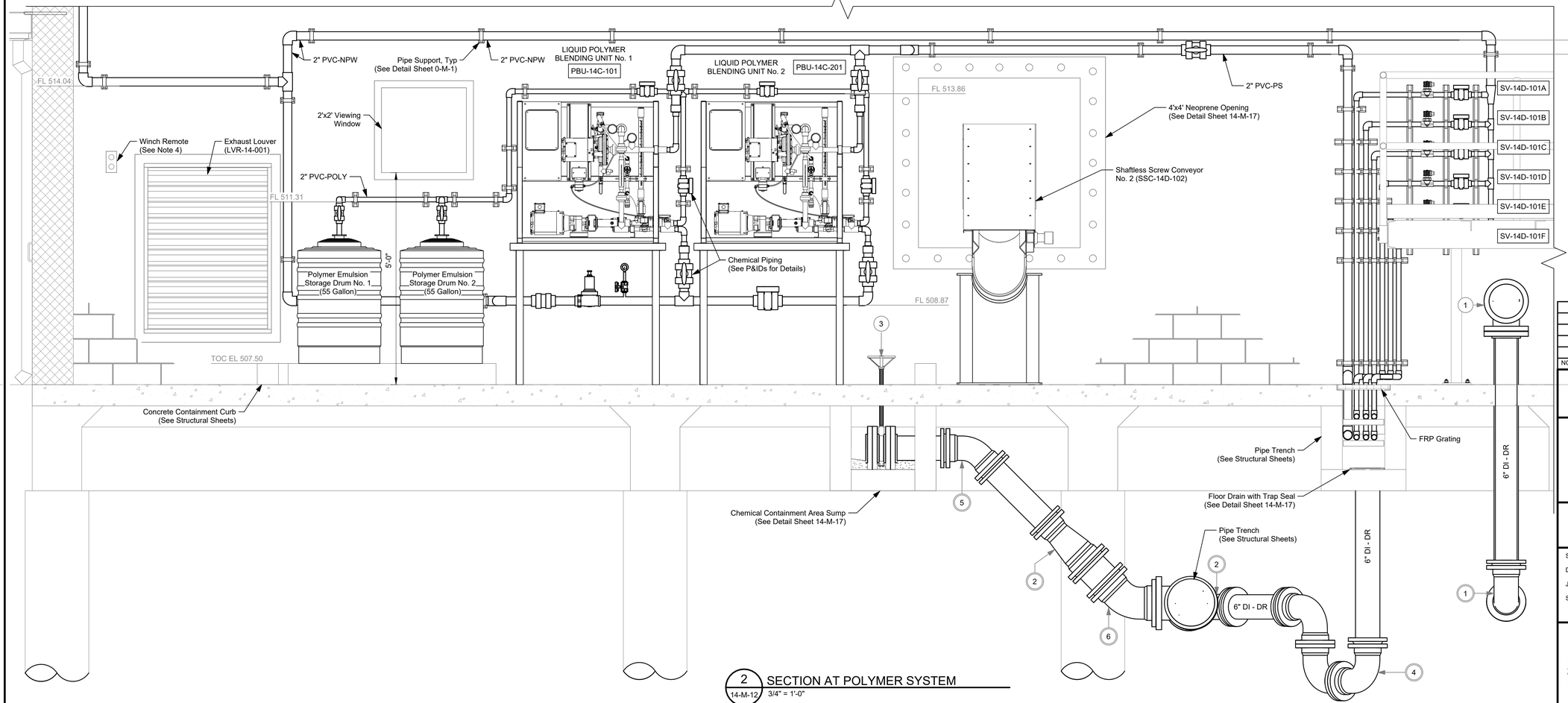

2 14-M-12 SECTION AT POLYMER SYSTEM
3/4" = 1'-0"

NO.	DATE	REVISIONS	APP.

WILBARGER CREEK M.U.D. No. 2
TRAVIS COUNTY, TEXAS

WASTEWATER TREATMENT PLANT EXPANSION TO 1.5 MGD

DEWATERING POLYMER SYSTEM PLAN & SECTIONS - SHEET 1 OF 2

QUIDDITY
Texas Board of Professional Engineers and Land Surveyors Reg. No. F-23290
912 South Capital of Texas Hwy, Suite 300 Austin, TX 78746 512.441.9493

SCALE:	As indicated	DGN. BY:	ABM
DATE:	DECEMBER 2025	DWN. BY:	MP
JOB NO.	0A651-0021-02	DWG. NO.	14-M-12
SUBMITTED:		SURV. BY:	
		F.B. NO.	

STATE OF TEXAS
JORDAN ZYLBERBERG
142350
LICENSED
PROFESSIONAL ENGINEER
7/2/26

14-M-12
SHEET NO. 113 OF 230

K:\13889\13889-0016-00 WWTP EXPANSION TO 1.50 MGD FOR HARVEST G\2. DESIGN PHASE\CAD\PLANS\STRUCTURAL.DWG

ORIGINAL SCALE IN INCHES FOR REDUCED PLANS

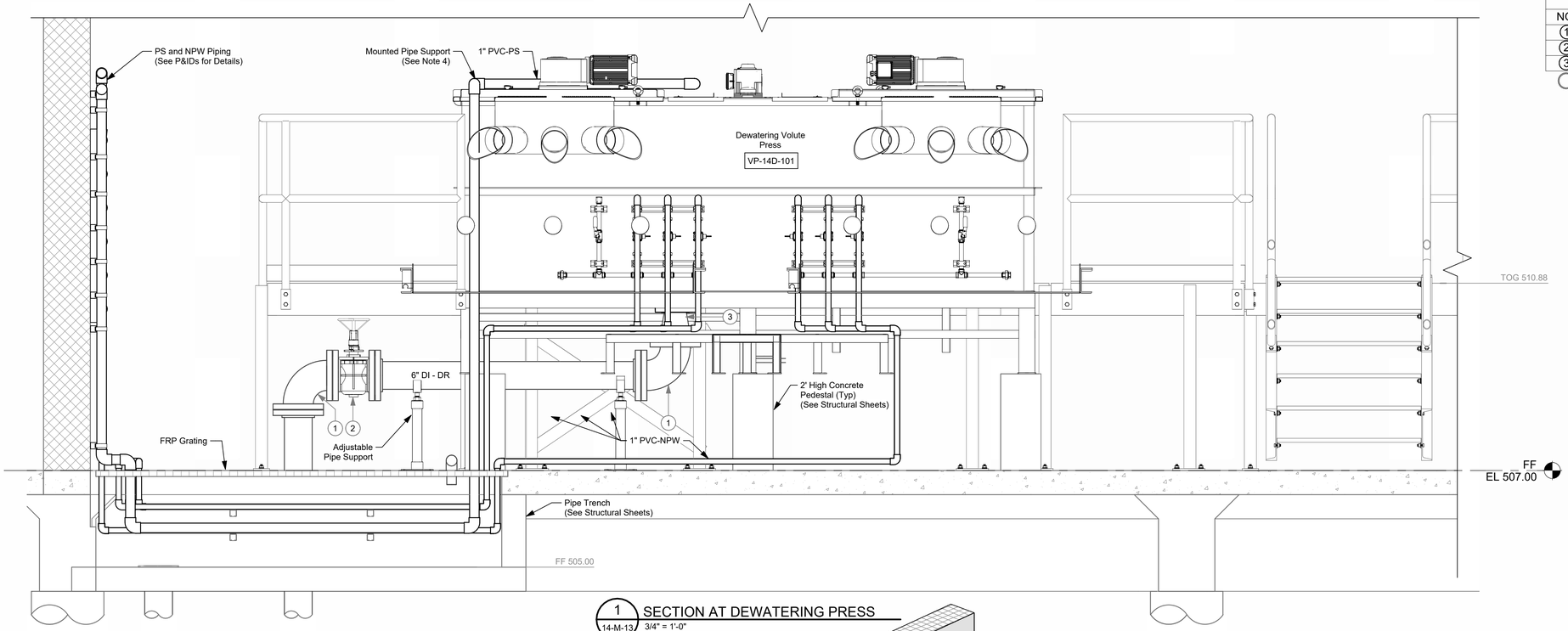

1 / 14-M-13 SECTION AT DEWATERING PRESS
3/4" = 1'-0"

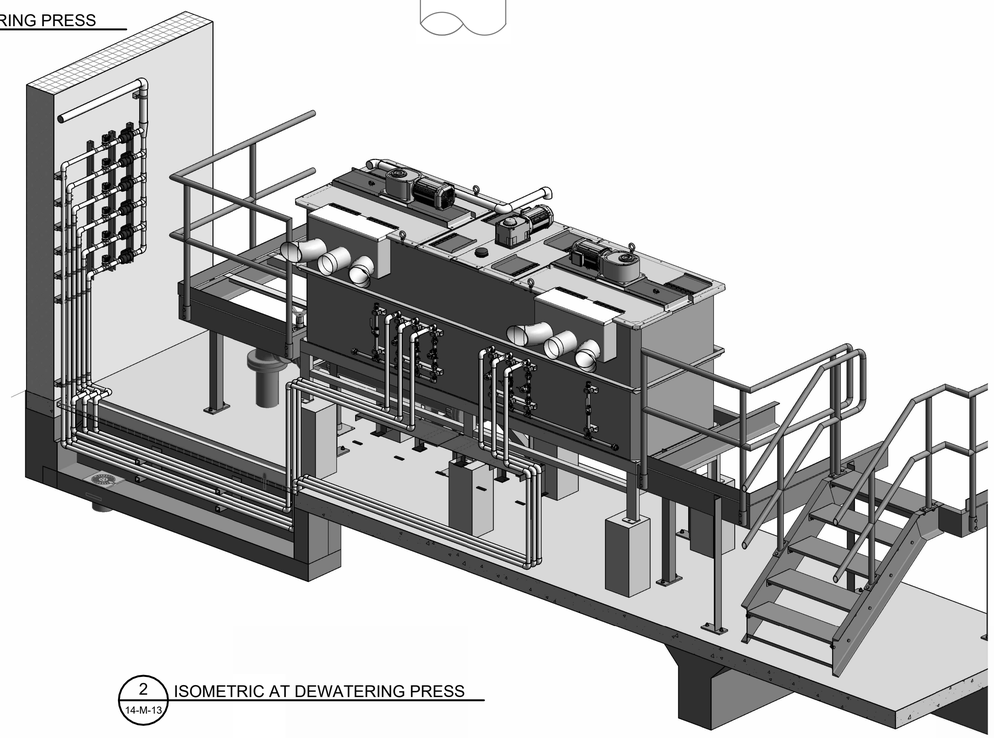

2 / 14-M-13 ISOMETRIC AT DEWATERING PRESS

VALVES, FITTINGS, AND ACCESSORIES SCHEDULE	
NO.	DESCRIPTIONS
1	6" 90° Bend, MJ
2	6" Plug Valve, (PV-14D-001)
3	6" x 4" Reducer, FJ
○	Indicates Restrained Valve or Fitting

NOTES:

1. Mount all small diameter piping to walls with stainless steel unistruct & stainless steel hardware. The maximum distance between supports shall be 5'-0".
2. 3" diameter and smaller valves, fittings, and accessories not labeled. See P&IDs for valves
3. Insulate all above ground piping in accordance with Specification Section 15226.
4. Volute Press manufacturer shall provide the mounting hardware for the Contractor to mount polymer solution piping to tank.

NO.	DATE	REVISIONS	APP.

WILBARGER CREEK M.U.D. No. 2
TRAVIS COUNTY, TEXAS

WASTEWATER TREATMENT PLANT EXPANSION TO 1.5 MGD

DEWATERING POLYMER SYSTEM PLAN & SECTIONS - SHEET 2 OF 2

QUIDDITY
Texas Board of Professional Engineers and Land Surveyors Reg. No. F-23290
912 South Capital of Texas Hwy, Suite 300 · Austin, TX 78746 · 512.441.9493

SCALE:	As indicated	DGN. BY:	ABM
DATE:	DECEMBER 2025	DWN. BY:	MP
JOB NO.	0A651-0021-02	DWG. NO.	14-M-13
SUBMITTED:		SURV. BY:	
		F.B. NO.	

STATE OF TEXAS
JORDAN ZYLBERBERG
142350
LICENSED PROFESSIONAL ENGINEER
7/2/26

14-M-13
SHEET NO. 114 OF 230

K:\13889\13889-0016-00 WWTP EXPANSION TO 1.50 MGD FOR HARVEST GI2. DESIGN PHASE\CAD\PLANS\STRUCTURAL.DWG

0 1 2 3 4 5

ORIGINAL SCALE IN INCHES FOR REDUCED PLANS

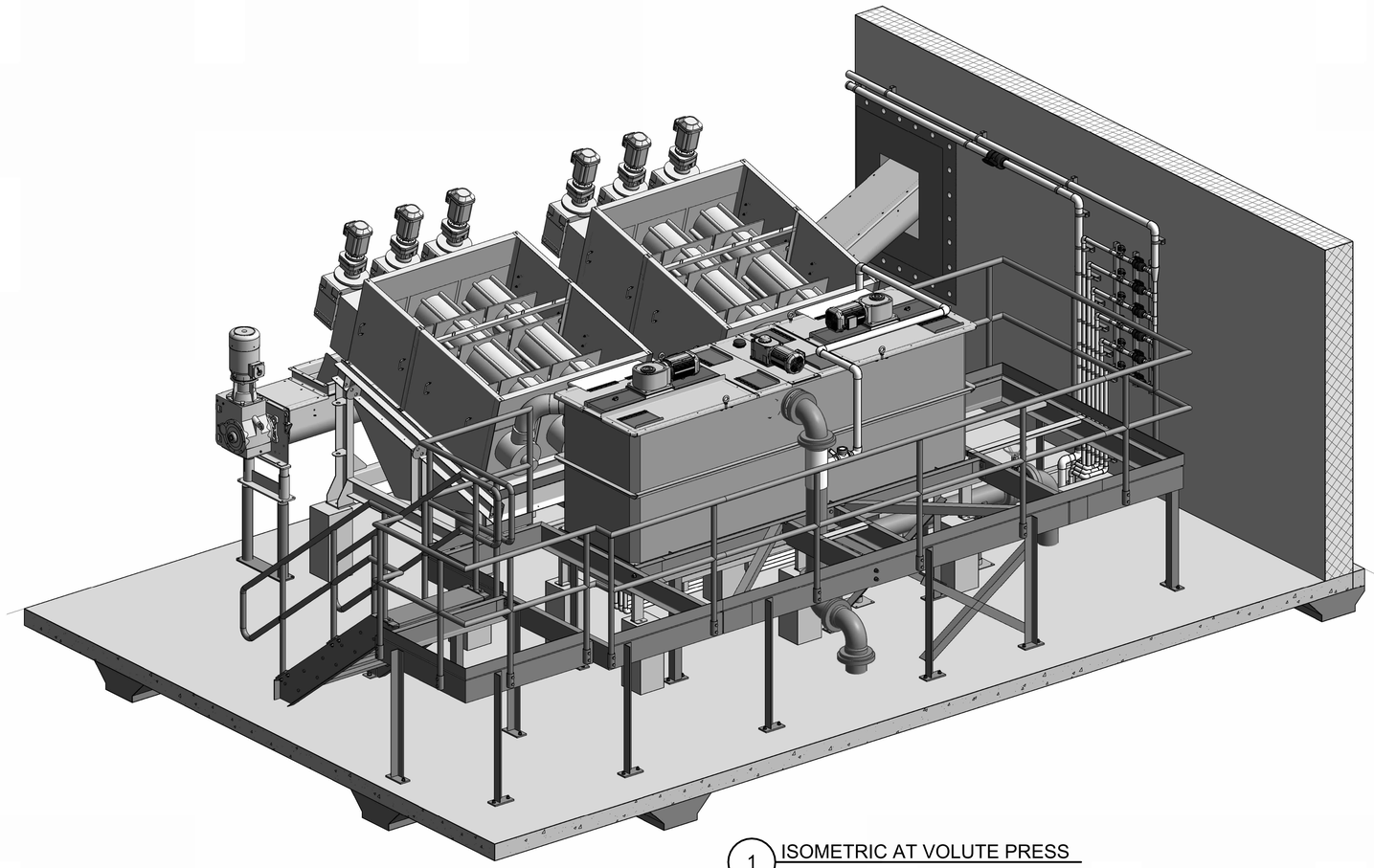

1 ISOMETRIC AT VOLUTE PRESS

NO.	DATE	REVISIONS	APP.

WILBARGER CREEK M.U.D. No. 2
TRAVIS COUNTY, TEXAS

WASTEWATER TREATMENT PLANT EXPANSION TO 1.5 MGD

DEWATERING VOLUTE PRESS ISOMETRIC

QUIDDITY
Texas Board of Professional Engineers and Land Surveyors Reg. No. F-23290
912 South Capital of Texas Hwy, Suite 300 Austin, TX 78746 512.441.9493

SCALE:		DGN. BY:	ABM
DATE:	DECEMBER 2025	DWN. BY:	MP
JOB NO.	0A651-0021-02	DWG. NO.	14-M-14
SUBMITTED:		SURV. BY:	
		F.B. NO.	

STATE OF TEXAS
JORDAN ZYLBERBERG
142360
LICENSED PROFESSIONAL ENGINEER
7/2/26

14-M-14
SHEET NO. 115 OF 230

K:\13889\13889-0016-00 WWTP EXPANSION TO 1.50 MGD FOR HARVEST G\2. DESIGN PHASE\CAD\PLANS\STRUCTURAL.DWG

ORIGINAL SCALE IN INCHES FOR REDUCED PLANS

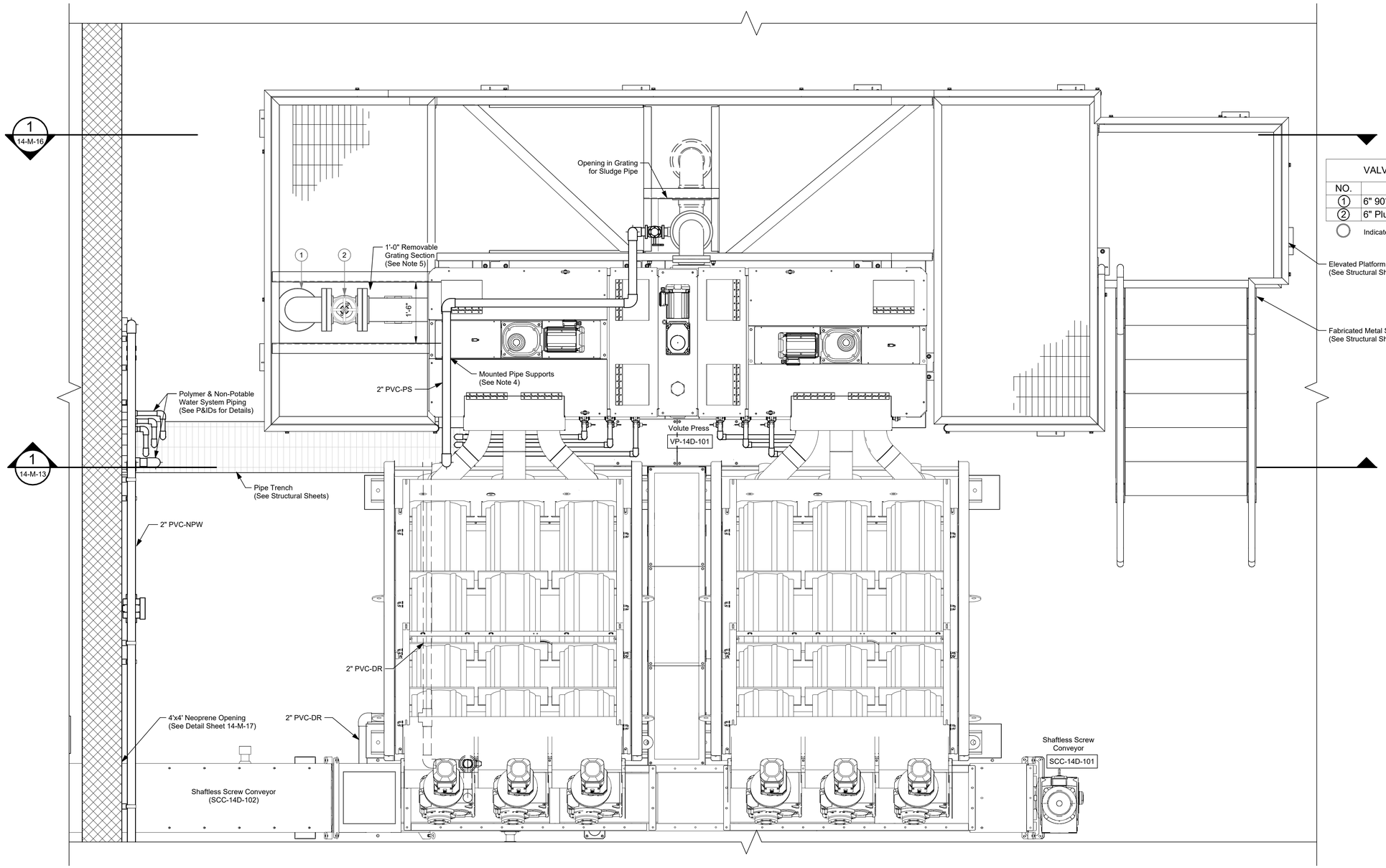

1 / 14-M-15 VOLUTE PRESS PLAN
3/4" = 1'-0"

0 .5 1 2 3 4
SCALE: 3/4" = 1' - 0"

VALVES, FITTINGS, AND ACCESSORIES SCHEDULE	
NO.	DESCRIPTIONS
1	6" 90° Bend, FJ
2	6" Plug Valve, (PV-14D-001)
○	Indicates Restrained Valve or Fitting

NOTES:

1. Mount all small diameter piping to walls with stainless steel unistrut & stainless steel hardware. The maximum distance between supports shall be 5'-0".
2. 3" diameter and smaller valves, fittings, and accessories not labeled. See P&IDs for valves
3. Insulate all above ground piping in accordance with Specification Section 15226.
4. Volute Press manufacturer shall provide the mounting hardware for the Contractor to mount polymer solution piping to tank.
5. Install tabs on embedded angle grating supports for the 1'-0" removable grating sections.

NO.	DATE	REVISIONS	APP.

WILBARGER CREEK M.U.D. No. 2
TRAVIS COUNTY, TEXAS

WASTEWATER TREATMENT PLANT EXPANSION TO 1.5 MGD

DEWATERING VOLUTE PRESS PLAN

QUIDDITY
Texas Board of Professional Engineers and Land Surveyors Reg. No. F-23280
912 South Capital of Texas Hwy, Suite 300 · Austin, TX 78746 · 512.441.9493

SCALE:	As indicated	DGN. BY:	ABM
DATE:	DECEMBER 2025	DWN. BY:	MP
JOB NO.	0A651-0021-02	DWG. NO.	14-M-15
SUBMITTED:		SURV. BY:	
		F.B. NO.	

STATE OF TEXAS
JORDAN ZYLBERBERG
142350
LICENSED PROFESSIONAL ENGINEER
7/2/26

14-M-15
SHEET NO. 116 OF 230

K:\13889\13889-0016-00 WWTP EXPANSION TO 1.50 MGD FOR HARVEST GI\2. DESIGN PHASE\CAD\PLANS\STRUCTURAL.DWG

0 1 2 3 4 5

ORIGINAL SCALE IN INCHES FOR REDUCED PLANS

0 .5 1 2 3 4

SCALE: 3/4" = 1' - 0"

VALVES, FITTINGS, AND ACCESSORIES SCHEDULE	
NO.	DESCRIPTIONS
1	6" 90° Bend, MJ
2	6" 90° Bend, FJ
3	8" 45° Bend, MJ
4	6" Plug Valve, (PV-14D-001)
5	8" Tee, MJ
6	8" x 6" Reducer, MJ
7	8" WYE, MJ

Indicates Restrained Valve or Fitting

NOTES:

1. Mount all small diameter piping to walls with stainless steel unistrut & stainless steel hardware. The maximum distance between supports shall be 5'-0".
2. 3" diameter and smaller valves, fittings, and accessories not labeled. See P&IDs for valves
3. Insulate all above ground piping in accordance with specification section 15226.

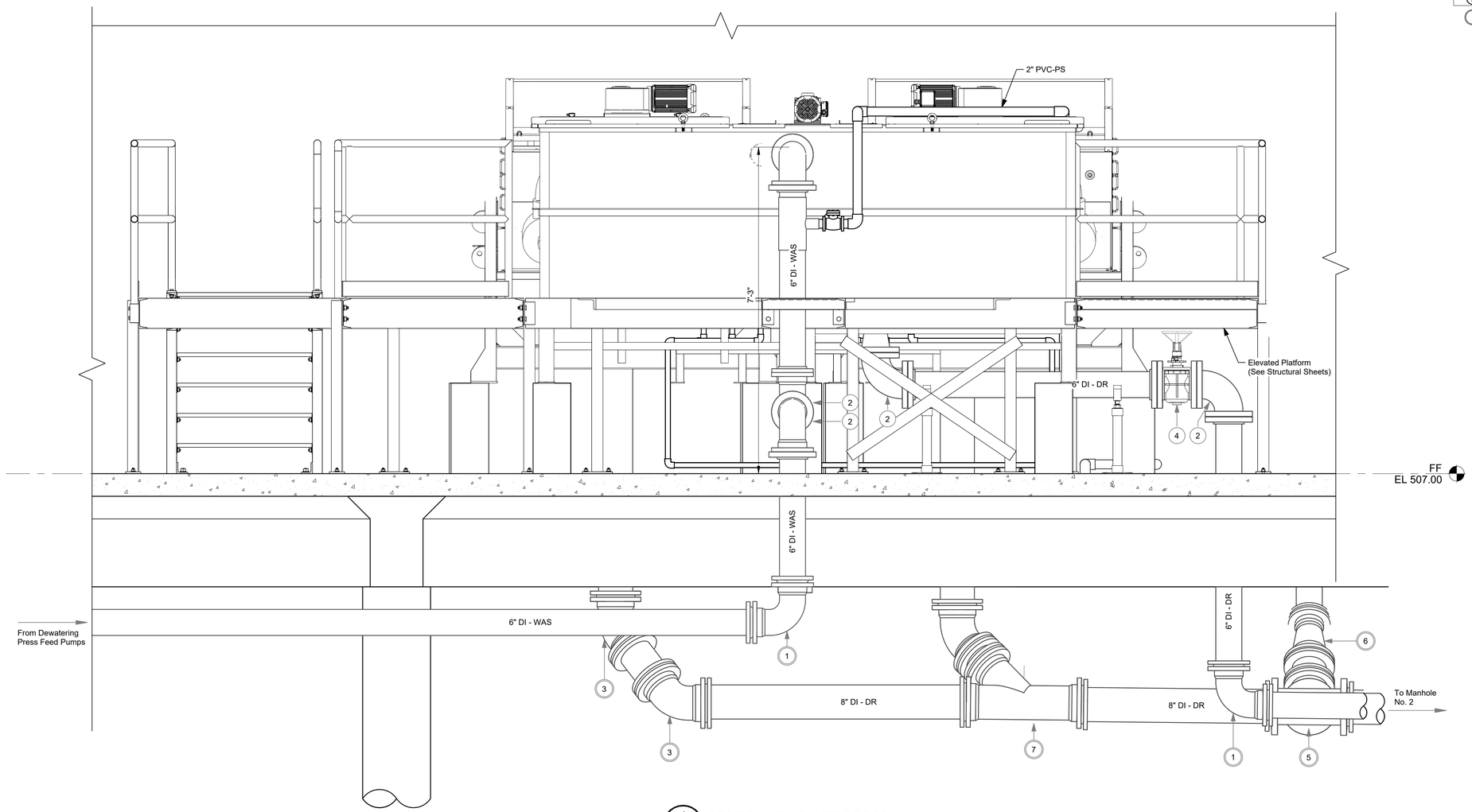

1 / 14-M-16 SECTION AT VOLUTE PRESS

3/4" = 1'-0"

NO.	DATE	REVISIONS	APP.

WILBARGER CREEK M.U.D. No. 2
TRAVIS COUNTY, TEXAS

WASTEWATER TREATMENT PLANT EXPANSION TO 1.5 MGD

DEWATERING VOLUTE PRESS PLAN SECTIONS

QUIDDITY
Texas Board of Professional Engineers and Land Surveyors Reg. No. F-23290
912 South Capital of Texas Hwy, Suite 300 Austin, TX 78746 512.441.9493

SCALE:	As indicated	DGN. BY:	ABM
DATE:	DECEMBER 2025	DWN. BY:	MP
JOB NO.	0A651-0021-02	DWG. NO.	14-M-16
SUBMITTED:		SURV. BY:	
		F.B. NO.	

STATE OF TEXAS
JORDAN ZYLBERBERG
142350
LICENSED PROFESSIONAL ENGINEER

7/2/26

14-M-16

K:\13889\13889-0016-00 WWTP EXPANSION TO 1.50 MGD FOR HARVEST G\2. DESIGN PHASE\CAD\PLANS\STRUCTURAL.DWG

0 1 2 3 4 5 ORIGINAL SCALE IN INCHES FOR REDUCED PLANS

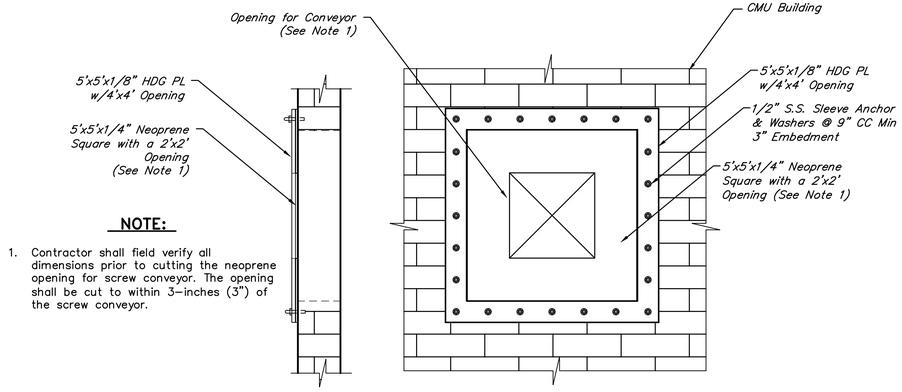

NOTE:

1. Contractor shall field verify all dimensions prior to cutting the neoprene opening for screw conveyor. The opening shall be cut to within 3–inches (3") of the screw conveyor.

NEOPRENE OPENING ON BUILDING DETAIL
NOT TO SCALE

ROOM FINISH SCHEDULE

RM.	RM. NAME	FLR.			BASE			WALLS			CLNG.			HT.	REMARKS
		VINYL TILE	SEALED CONCRETE	SPECIFICATION SECTION 09921 4" VINYL	CERAMIC MOSAIC	NONE		PAINTED GYP. BOARD (SEMI GLOSS)	FRP	CMU BLOCK FILLER AND PAINT	CORRUGATED SIDING	EXPOSED STRUCTURE	EXPOSED STRUCTURE W/ INSULATION	SUSPENDED TILE	
14–1	DEWATERING BUILDING		✓			✓				▩					VARIES	Ceiling Finish to Match Walls
14–2	DEWATERING ELECTRICAL ROOM		✓			✓				▩					VARIES	Ceiling Finish to Match Walls

N W E S — INDICATES INDIVIDUAL WALL TO RECEIVE FINISH

▩ INDICATES ALL WALLS TO RECEIVE FINISH

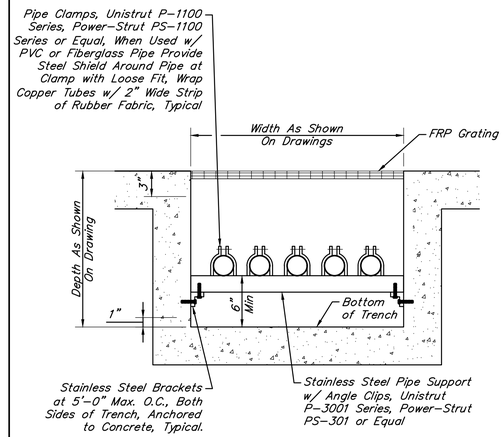

PIPE TRENCH DETAIL
NOT TO SCALE

NOTES:

1. Trap guard shall be factory fitted to match each floor drain (and floor sink) by size, model, and manufacturer.
2. Floor sink trap guard installation is similar.
3. Installation of trap guard to be in accordance with manufacturer's recommendations.
4. Insert trap guard only after final rodding of drains. Install trap guard with clear silicone caulk for gas tite seal. For drain rodding after installation, insert sewer tape through lightly greased 1–½" PVC pipe to protect trap guard.

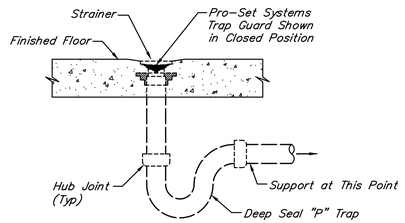

FLOOR DRAIN WITH TRAP SEAL DETAIL
NOT TO SCALE

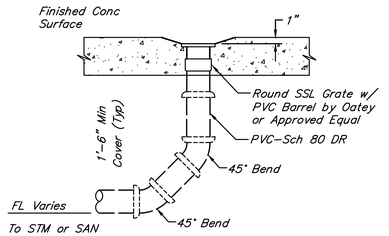

TYPICAL DRAIN GATE DETAIL
NOT TO SCALE

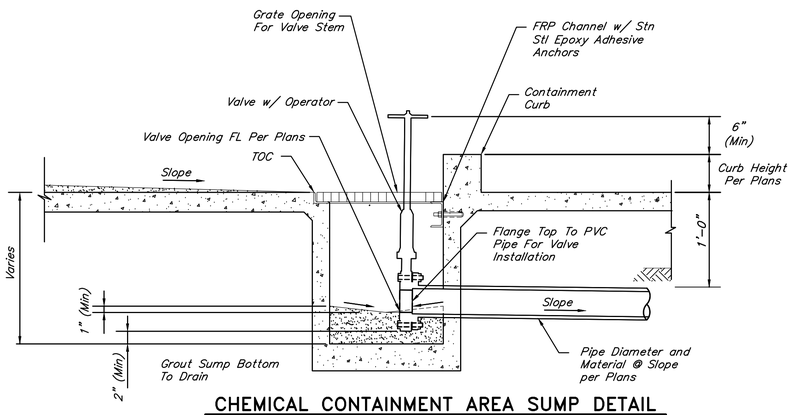

CHEMICAL CONTAINMENT AREA SUMP DETAIL
NOT TO SCALE

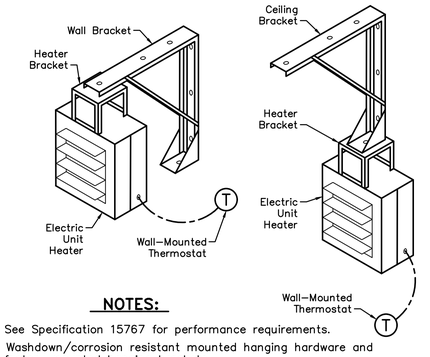

NOTES:

1. See Specification 15767 for performance requirements.
2. Washdown/corrosion resistant mounted hanging hardware and factory mounted hanging brackets.
3. Enclosure shall be NEMA 4X rated.
4. Wall–mounted thermostat shall be 4–4.5–ft off finished floor.

ELECTRIC UNIT HEATER DETAIL
NOT TO SCALE

VENTILATION FAN NOTES:

1. Wall mount each fan in a square opening frame with treated wood and weatherproof sealed. Provide a corrosion and UV resistant, weatherproof fan shroud with an insect screen covered opening a shown in the exhaust fan schematic on this sheet. See Structural sheets for locations.

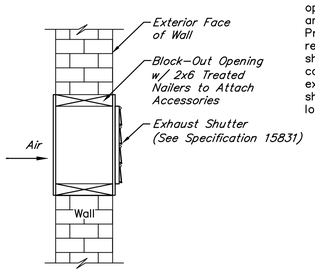

EXHAUST LOUVER DETAIL
NOT TO SCALE

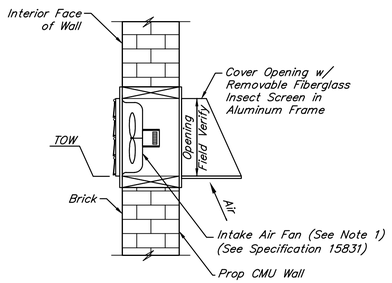

VENT FAN DETAIL
NOT TO SCALE

DOOR SCHEDULE

	ROOM	DOOR DESCRIPTION						FRAME		
MARK	NAME	TYPE	WIDTH	HEIGHT	THICK	MAT	FINISH	MAT	FINISH	REMARKS
14–1A	DEWATERING BUILDING	SINGLE	3'–0"	7'–0"	0'–1 3/4"	FRP	N/A	FRP	PAINT	1'x1' WINDOW EACH, PANIC HDW
14–1B	DEWATERING BUILDING	SINGLE	3'–0"	7'–0"	0'–1 3/4"	FRP	N/A	FRP	PAINT	1'x1' WINDOW, PANIC HDW
14–1C	DEWATERING BUILDING	OVERHEAD	10'–0"	12'–0"	SEE SECTION 08331 – OVERHEAD COILING DOORS					
14–2A	DEWATERING ELECTRICAL ROOM	SINGLE	3'–0"	7'–0"	0'–1 3/4"	FRP	N/A	FRP	PAINT	1'x1' WINDOW, PANIC HDW
14–2B	DEWATERING ELECTRICAL ROOM	SINGLE	3'–0"	7'–0"	0'–1 3/4"	FRP	N/A	FRP	PAINT	1'x1' WINDOW, PANIC HDW

NO.	DATE	REVISIONS	APP.

WILBARGER CREEK M.U.D. No. 2
TRAVIS COUNTY, TEXAS

WASTEWATER TREATMENT PLANT EXPANSION TO 1.5 MGD

DEWATERING DETAILS

QUIDDITY
Texas Board of Professional Engineers and Land Surveyors Reg. No. F-23290
912 South Capital of Texas Hwy, Suite 300 • Austin, TX 78746 • 512.441.9493

SCALE: AS SHOWN DGN. BY: JZ
DATE: FEBRUARY 2026 DWN. BY: JSTRUHAR
JOB NO. 0A651–0021–02 DWG. NO.
SUBMITTED: SURV. BY:
F.B. NO.

STATE OF TEXAS — JORDAN ZYLBERBERG — 142350 — LICENSED PROFESSIONAL ENGINEER — 3/10/26

14–M–17
SHEET NO. 118 OF 230

C:\Users\cgular\DC\ACCDocs\Quiddity – Water–\0A651–0021–02 _ WILBARGER WWTP EXP. 1.5 MGD\Project Files\PLANS\MECH–A14.dwg, Feb 19, 2026 – 7:41pm, cgular

0 1 2 3 4 5 ORIGINAL SCALE IN INCHES FOR REDUCED PLANS

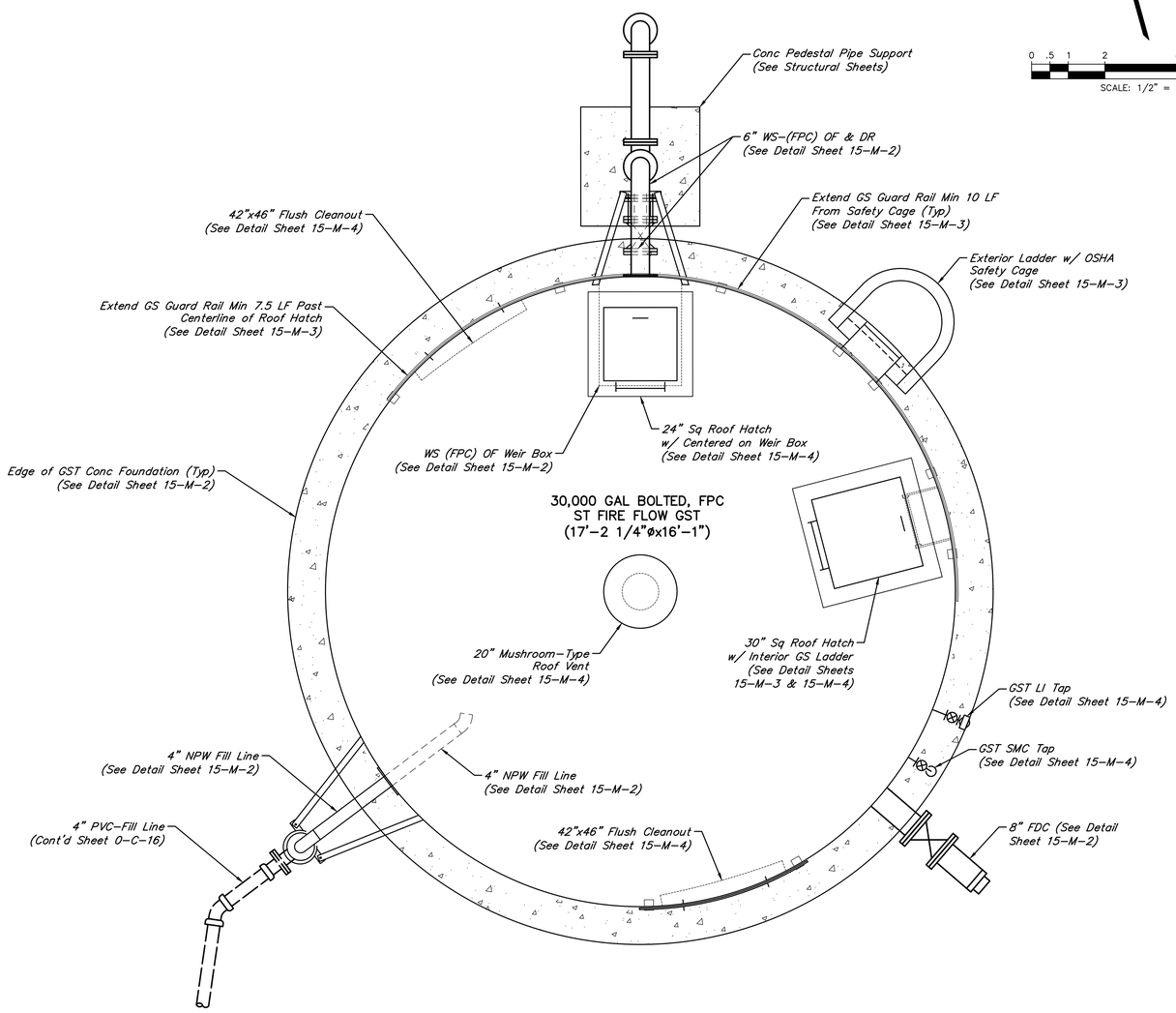

GROUND STORAGE TANK No. 1 PLAN

SCALE: 1/2"=1'-0"

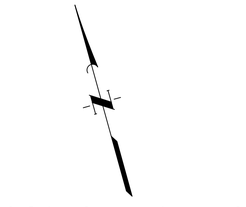

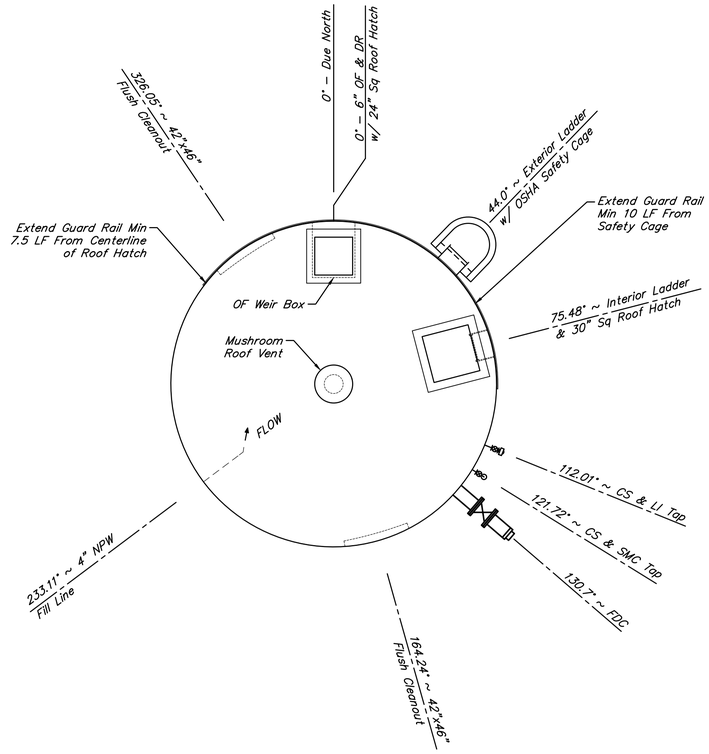

GST ACCESSORY DETAIL - PLAN VIEW

NOT TO SCALE

PIPING NOTES:

1. All aboveground pipe to be ductile iron pipe (DI), stainless steel (SS) or welded steel (WS) unless otherwise noted.

GST GENERAL NOTES:

1. GST piping and accessories are shown in profile views for detail purposes only. See the "GST ACCESSORY DETAIL - PLAN VIEW" on this sheet for location and true orientation of piping and accessories.

NO.	DATE	REVISIONS	APP.

WILBARGER CREEK M.U.D. No. 2
TRAVIS COUNTY, TEXAS

WASTEWATER TREATMENT PLANT
EXPANSION TO 1.5 MGD

GROUND STORAGE TANK PLAN AND DETAILS

QUIDDITY
Texas Board of Professional Engineers and Land Surveyors Reg. No. F-23290
912 South Capital of Texas Hwy, Suite 300 • Austin, TX 78746 • 512.441.9493

SCALE:	1/2" = 1'-0"	DGN. BY:	ZKELL
DATE:	JULY 2026	DWN. BY:	JSTRUHAR
JOB NO.	0A651-0021-02	DWG. NO.	
SUBMITTED:		SURV. BY:	
		F.B. NO.	

STATE OF TEXAS
ZACHARY A. COOPER
156249
LICENSED
PROFESSIONAL ENGINEER
7/1/26

15-M-1
SHEET NO. 120 OF 230

C:\Users\JAS\DC\ACCDocs\Quiddity\0A651-0021-02 _ WILBARGER WWTP EXP. 1.5 MGD\Project Files\PLANS\MECH-A15.dwg, Jul 01, 2026 - 10:03am, JAS

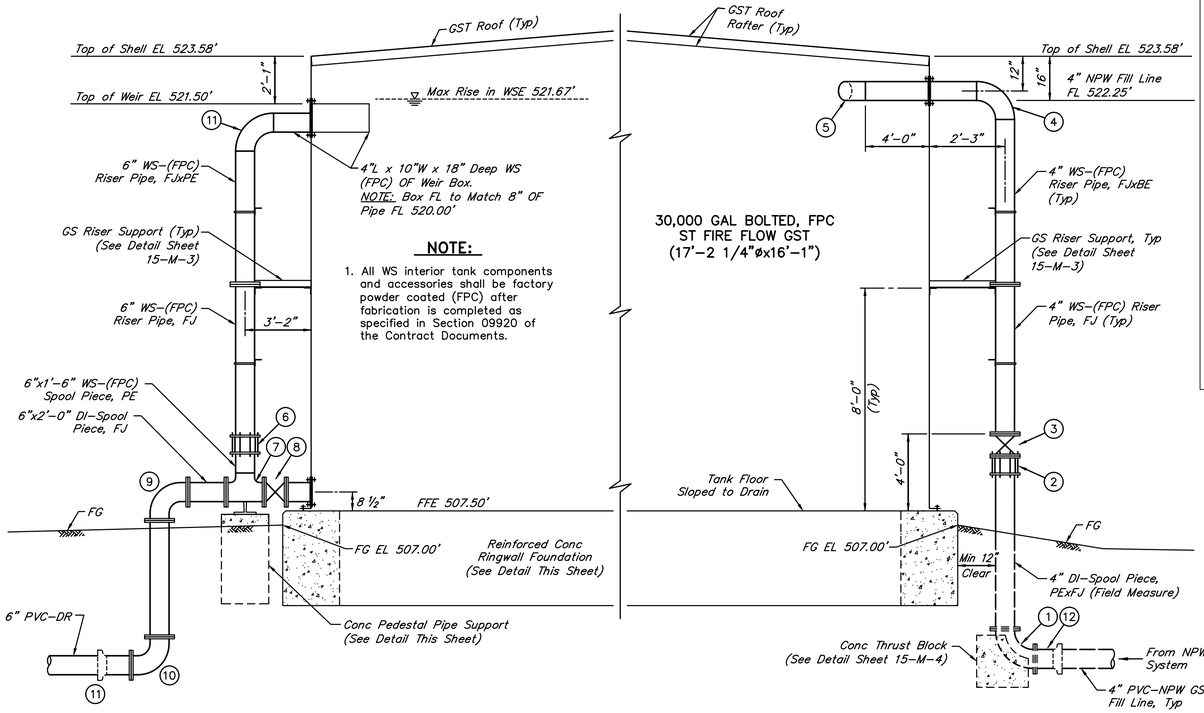

OVERFLOW/DRAIN LINE DETAIL
NOT TO SCALE

FILL LINE DETAIL
NOT TO SCALE

VALVES AND ACCESSORIES SCHEDULE

No.	DESCRIPTION
1	4"x 90° DI-Vert Long Radius Bend, MJ
2	4" DI-FAC, FJ
3	4" DI-(OSY) GV, FJ
4	4"x 90° WS-(FPC) Vert Long Radius Bend, BE
5	4"x 45° WS-(FPC) Horiz Bend, BE
6	6" DI-SLC
7	6"x 6" DI-Vert Base Bend Tee, FJ
8	6" DI-(OSY) GV, FJ
9	6"x 90° DI Bend, FJ
10	6"x 90° DI Bend, MJ
11	6" DI-Adapter, MJ x PRO (DI to PVC)
12	4" DI-Adapter, FJ x RPO (DI to PVC)

GST CONSTRUCTION NOTES:

1. All structural steel details and connections shall conform to the latest A.I.S.C. Standards.
2. All structural steel rolled shapes, steel plates and bars shall conform to ASTM A36 latest edition.
3. All steel members and connections exposed to earth or weather shall be hot-dipped galvanized.
4. No engineering drawing may be reproduced for use as shop drawings.
5. Provide wall or roof reinforcing as per tank manufacturer's recommendations for all inlets, outlets, manways, roof vents, cleanouts and ladders.
6. Pipe penetrations through walls shall have the centerline location determined as recommended by the tank manufacturer and confirmed by the Engineer.
7. All GST interior piping and components shall be coated per Specification Section 09920.

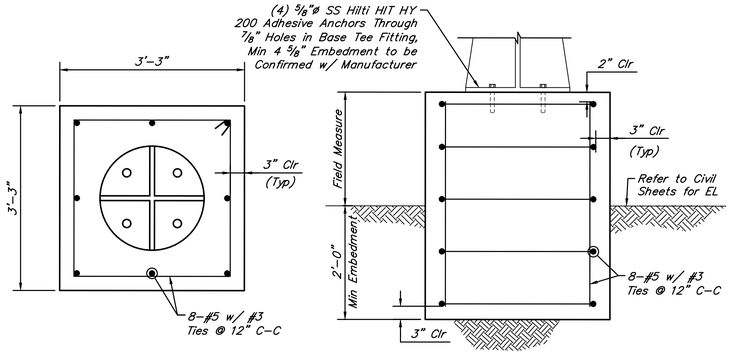

CONCRETE PEDESTAL PIPE SUPPORT DETAIL
SCALE: 3/4" = 1'-0"

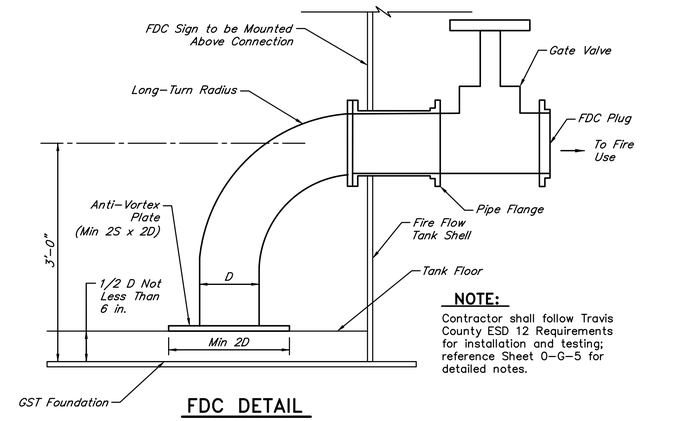

FDC DETAIL
NOT TO SCALE

NOTE:
Contractor shall follow Travis County ESD 12 Requirements for installation and testing; reference Sheet 0-G-5 for detailed notes.

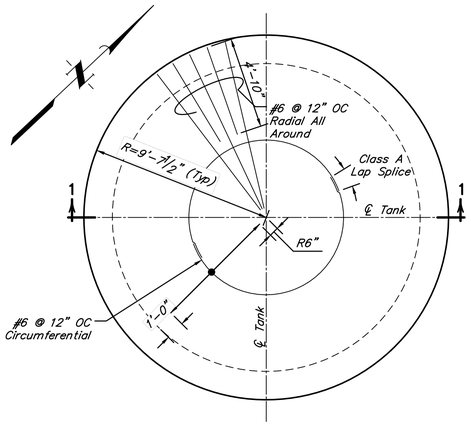

GST FOUNDATION PLAN - 30,000 GALLON
SCALE: 1/4" = 1'-0"

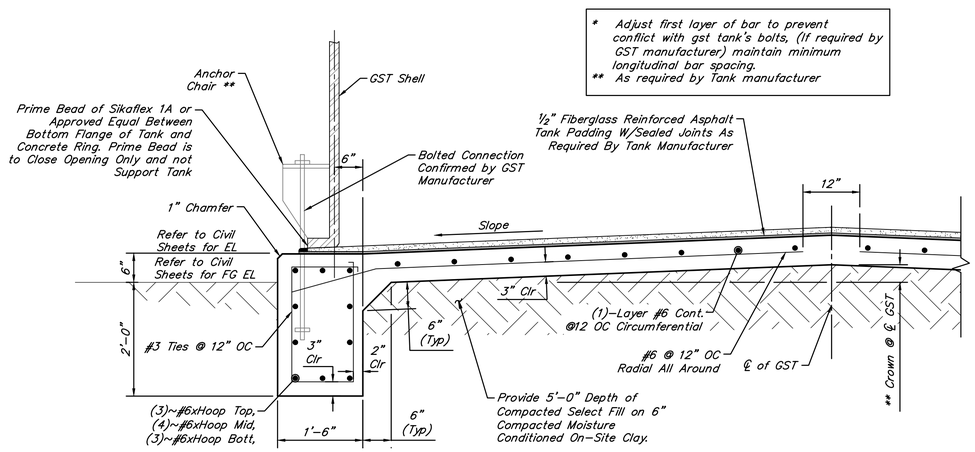

TYPICAL SECTION @ GROUND STORAGE TANK - 30,000 GALLON
SCALE: 3/4" = 1'-0"

For Pipe Support & GST Foundation Structural Details Only

STATE OF TEXAS · AHMAD DANESHVAR · 132679 · LICENSED PROFESSIONAL ENGINEER
07/01/2026

NO.	DATE	REVISIONS	APP.

WILBARGER CREEK M.U.D. No. 2
TRAVIS COUNTY, TEXAS

WASTEWATER TREATMENT PLANT EXPANSION TO 1.5 MGD

GROUND STORAGE TANK DETAILS - SHEET 1 OF 3

QUIDDITY
Texas Board of Professional Engineers and Land Surveyors Reg. No. F-23290
912 South Capital of Texas Hwy, Suite 300 • Austin, TX 78746 • 512.441.9493

SCALE:	AS SHOWN	DGN. BY:	ZKELL
DATE:	JULY 2026	DWN. BY:	JSTRUHAR
JOB NO.	0A651-0021-02	DWG. NO.	
SUBMITTED:		SURV. BY:	
		F.B. NO.	

STATE OF TEXAS · ZACHARY A. COOPER · 156249 · LICENSED PROFESSIONAL ENGINEER
7/1/26

15-M-2
SHEET NO. 121 OF 230

0 1 2 3 4 5 ORIGINAL SCALE IN INCHES FOR REDUCED PLANS

NOTES:

1. Guard rail to be rolled to curvature of tank and set 1–3/4" back from edge.
2. All pipe ends to be capped.

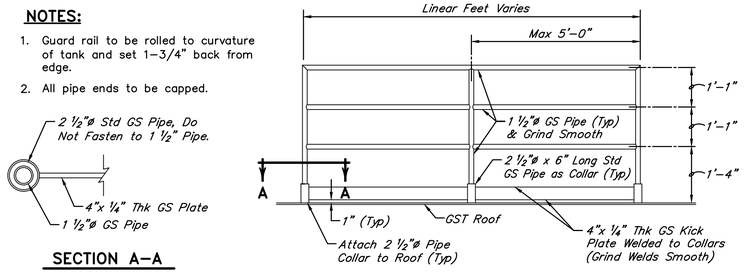

SECTION A–A

GST GUARD RAIL DETAILS

NOT TO SCALE

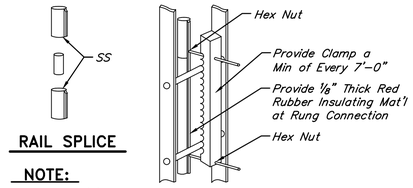

RAIL SPLICE

LADDER RUNG CLAMP

NOTE:

Provide two (2) compatible OSHA approved, full body climbing harnesses (buckle type).

GST SS SAFETY RAIL DETAIL

NOT TO SCALE

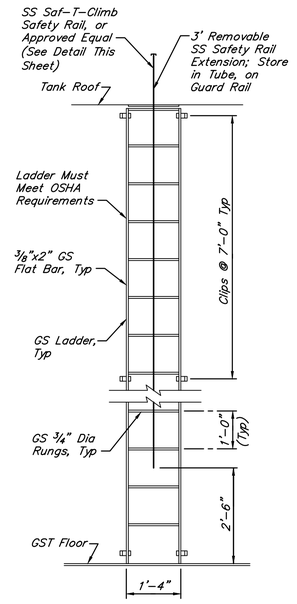

INTERIOR GST LADDER DETAIL

NOT TO SCALE

NOTES:

1. Locate hinge to avoid conflict between locking gate and tank wall.
2. Isolate dissimilar metals with insulation kits.
3. Provide a pad for protection from safety cage access cover swinging out and hitting the tank wall.

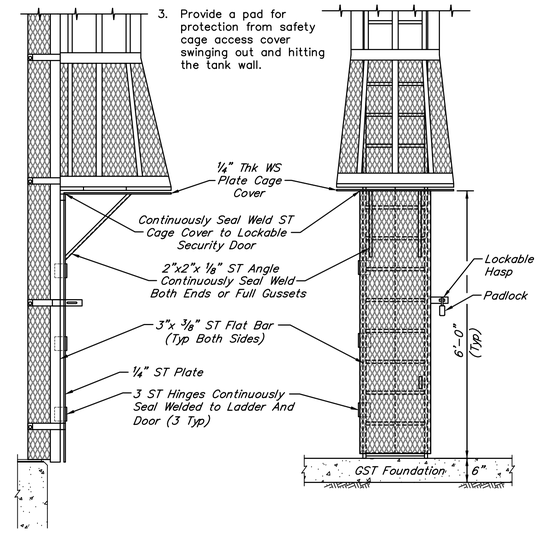

SIDE VIEW FRONT VIEW

SECURITY DOOR FOR CAGED LADDER

NOT TO SCALE

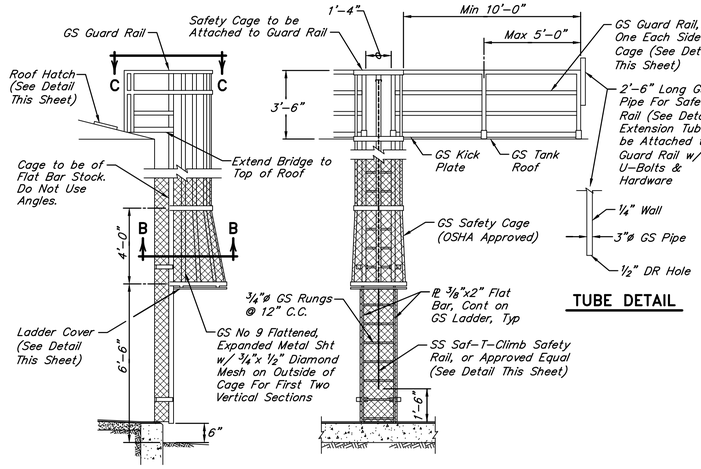

TUBE DETAIL

EXTERIOR GST LADDER DETAIL

NOT TO SCALE

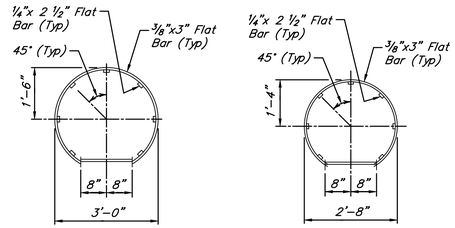

SECTION B–B SECTION C–C

SAFETY CAGE DETAIL

NOT TO SCALE

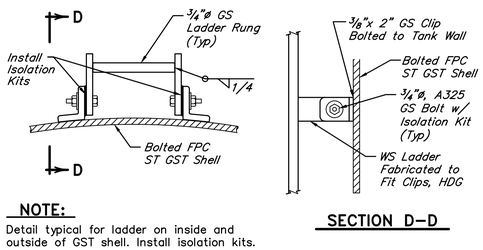

SECTION D–D

NOTE:

Detail typical for ladder on inside and outside of GST shell. Install isolation kits.

LADDER CLIP DETAIL

NOT TO SCALE

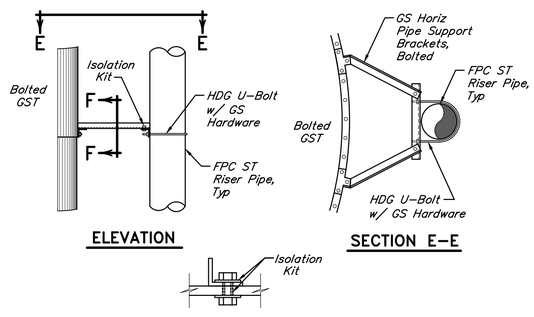

ELEVATION SECTION E–E

SECTION F–F

GST RISER SUPPORT DETAIL

NOT TO SCALE

NO.	DATE	REVISIONS	APP.

WILBARGER CREEK M.U.D. No. 2
TRAVIS COUNTY, TEXAS

WASTEWATER TREATMENT PLANT EXPANSION TO 1.5 MGD

GROUND STORAGE TANK DETAILS – SHEET 2 OF 3

QUIDDITY
Texas Board of Professional Engineers and Land Surveyors Reg. No. F-23290
912 South Capital of Texas Hwy, Suite 300 • Austin, TX 78746 • 512.441.9493

SCALE:	1/2" = 1'–0"	DGN. BY:	ZKELL
DATE:	JUNE 2026	DWN. BY:	JSTRUHAR
JOB NO.	0A651–0021–02	DWG. NO.	
SUBMITTED:		SURV. BY:	
		F.B. NO.	

STATE OF TEXAS
ZACHARY A. COOPER
156249
LICENSED PROFESSIONAL ENGINEER
7/1/26

15–M–3
SHEET NO. 122 OF 230

C:\Users\JAS\DC\ACCDocs\Quiddity\0A651–0021–02 _ WILBARGER WWTP EXP. 1.5 MGD\Project Files\PLANS\MECH–A15.dwg, Jun 25, 2026 – 12:26pm, JAS

0 1 2 3 4 5 ORIGINAL SCALE IN INCHES FOR REDUCED PLANS

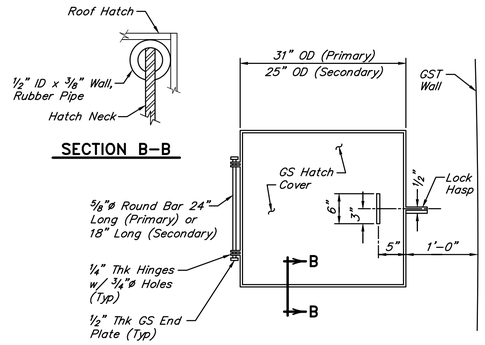

SECTION B–B

PLAN VIEW

NOTES:

1. The larger dimensions are for the interior ladder roof hatch (primary) and the smaller dimensions are for the overflow roof hatch (secondary).
2. Roof hatches to be located so that hatch opens toward the center of the tank roof.

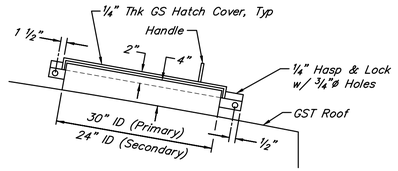

ELEVATION

GST ROOF HATCH DETAILS

NOT TO SCALE

NOTES:

1. FPC cover plate for cleanout door shall be rolled to match the storage tank curvature.
2. Contractor to provide a ⅛" thick reusable neoprene door gasket.

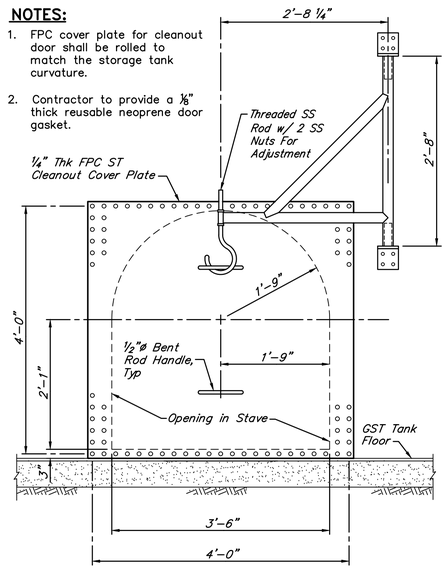

BOLTED GST 42"x46" FLUSH CLEANOUT AND PIPE DAVIT ARM DETAIL

NOT TO SCALE

NOTES:

1. Insulate entire assembly for freeze protection.
2. This is only a typical detail. See the "GST ACCESSORY DETAIL – PLAN VIEW" on Sheet 15–M–1 for true location & orientation.

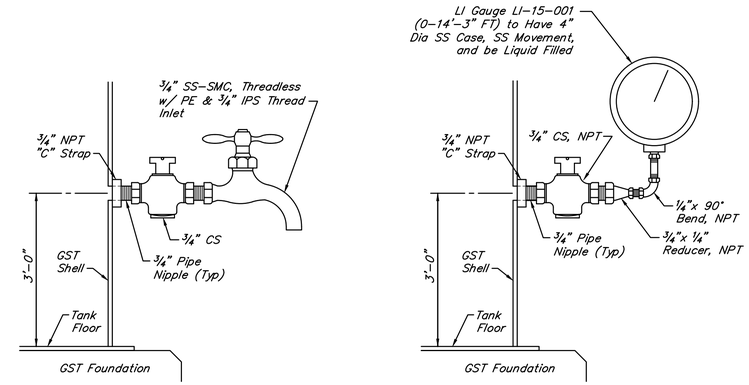

SMC TAP

LI TAP

GST TAP DETAILS

NOT TO SCALE

Openings to be Screened w/ 316 SS No 16 Mesh; 0.018" Wire and 0.0445" Opening w/ Min 50% Min Open Area Screen & Attached w/ 316 SS Adjustable Bands on Top & Bottom to Prevent Buckling of Screen Material

Secure Vent to GS Tank Nozzle Flange w/ ¼" Thk Neoprene Gasket and GS Hardware

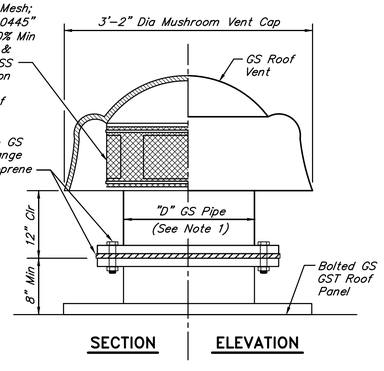

SECTION

ELEVATION

ROOF VENT NOTES:

1. "D" is the pipe diameter equal to 20 inches (20").
2. Vent to be fabricated from thin wall Schedule 10 steel pipe and hot–dipped galvanized after fabrication.
3. Secure vent at tank nozzle flange with eight (8) 5/8" diameter GS bolts, nuts and double flat washers. Do not coat fasteners.

MUSHROOM ROOF VENT DETAIL

NOT TO SCALE

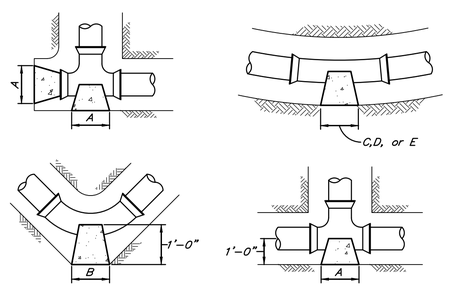

PIPE SIZE	"A" Plugs & Tees	"B" 90° Bend	"C" 45° Bend	"D" 22° 30' Bend	"E" 11° 15' Bend
4"	1'–0"	1'–0"	1'–0"	1'–0"	1'–0"
6"	1'–0"	1'–6"	1'–2"	1'–2"	1'–2"
8"	1'–3"	1'–9"	1'–6"	1'–6"	1'–3"
12"	2'–8"	3'–0"	2'–3"	2'–3"	2'–3"

NOTES:

1. Heights of all blocks shall be equal to "A","B","C","D" or "E" dimension called for.
2. All concrete to be poured against firm, undisturbed soil.

TYPICAL THRUST BLOCK DETAILS

NOT TO SCALE

NO.	DATE	REVISIONS	APP.

WILBARGER CREEK M.U.D. No. 2
TRAVIS COUNTY, TEXAS

WASTEWATER TREATMENT PLANT EXPANSION TO 1.5 MGD

GROUND STORAGE TANK DETAILS – SHEET 3 OF 3

QUIDDITY
Texas Board of Professional Engineers and Land Surveyors Reg. No. F-23290
912 South Capital of Texas Hwy, Suite 300 • Austin, TX 78746 • 512.441.9493

SCALE:	1/2" = 1'–0"	DGN. BY:	ZKELL
DATE:	JUNE 2026	DWN. BY:	JSTRUHAR
JOB NO.	0A651–0021–02	DWG. NO.	
SUBMITTED:		SURV. BY:	
		F.B. NO.	

STATE OF TEXAS
ZACHARY A. COOPER
156249
LICENSED PROFESSIONAL ENGINEER
7/1/26

15–M–4
SHEET NO. 123 OF 230

C:\Users\JAS\DC\ACCDocs\Quiddity\0A651–0021–02 _ WILBARGER WWTP EXP. 1.5 MGD\Project Files\PLANS\MECH–A15.dwg, Jun 25, 2026 – 12:27pm, JAS

STRUCTURAL NOTES:

I. GENERAL

A. All concrete work shall be performed in accordance with ACI 301 specifications, including but not limited to formwork installation, reinforcement placement, concrete mixing, delivery, placement, consolidation, finishing, curing, and protection, ensuring compliance with required strength, durability, and surface quality standards.

B. Design shall conform to the latest IBC Building Code requirements and latest ACI–318 & ACI–350 code for concrete structures.

C. All structural plan dimensions are interpreted from and shall be verified with the civil drawings. The engineer shall be notified if discrepancies exist.

D. Structural drawings to be coordinated with civil, electrical, grading, mechanical drawings for all openings, inserts, elevation, and related items.

E. All structural openings dimensions and locations shall be verified with the mechanical drawings. The engineer shall be notified if discrepancies exist.

F. Any unusual conditions encountered shall be brought to the attention of the engineer prior to concrete placement.

G. Locations of construction joints not shown shall be approved by the engineer prior to concrete placement.

H. The contractor shall adhere to the trench and excavation safety requirements set forth in the occupational safety and health administration (OSHA) Standards 29 CFR, Part 1926, Subpart P, excavations.

II. CONCRETE

A. All concrete shall have a minimum compressive strength of 4000 PSI at 28 Days in accordance with ASTM C–39 at 28 days in accordance with ASTM C–78. An air entrainment agent shall be used. Fly ash shall not be used in structural concrete.

B. Where concrete is placed against forms or seal slabs, reinforcing bars shall have a minimum of 2 inches clear cover unless shown otherwise. Where concrete is placed against earth, or in contact with liquid, reinforcing bars shall have a minimum of 3 inches clear cover.

C. Metal keyed construction joints and sawed joints may not be used. All joints below the highest water line shall have an approved waterstop.

D. Apply float finish to slab surfaces to receive a trowel finish.

E. All construction joints shall be thoroughly cleaned before fresh concrete is placed. Construction joints shall be roughened to a ¼" amplitude.

F. Except where floor drains occur, depressions between high spots shall not be greater than ⅛ in. Below a 10 ft. long straightedge in accordance with ACI 302.

G. Concrete faces shall not deviate more than 3/16" from the plan dimensions.

H. All exposed edges of beams, columns, slabs and walls shall be chamfered ¾" unless masonry or other members are erected flush with them.

III. REINFORCING STEEL

A. All reinforcing bars shall conform to ASTM A–615, grade 60. Arrangement and details of reinforcing steel, including bar supports and spacers, shall be in accordance with the latest ACI detailing manual, unless otherwise noted.

B. Detailing of reinforcing shall be in accordance with ACI 315, latest edition, unless shown otherwise. Placing of reinforcing shall be in accordance with C.R.S.I., "Recommended practice for placing of reinforcing bars", latest edition.

C. Where it is necessary to splice reinforcement at locations other than those shown on the drawings, the splice locations shall be approved by the engineer. Lap splices and embedment lengths, not shown on the drawings, shall be in accordance with C.R.S.I., Latest edition.

D. Support for the reinforcement shall be by metal high chairs either galv. or plastic dipped and spaced not more than six feet center to center.

E. All slab and beam reinforcement shall have a minimum extension into the support in accordance with the latest ACI code. If such extension is not possible, bars shall terminate in standard hooks.

IV. FOUNDATIONS

A. The mats should be poured the same day that they are excavated to minimize drying of the bearing soils. However, a lean concrete slab can be placed to protect the bearing area if the mats are left open overnight.

B. Site grading, fill material properties, excavation, subgrade preparation soil improvement, and allowable bearing pressure, shall follow geotechnical report prepared by: Terracon Consultants report No. 96255135 dated November 21, 2025.

C. Net allowable soil bearing pressure, recommended in the geotechnical report:

Slab on grade: 2500 PSF
Shallow Foundation: 2500 PSF

D. Excavate vertically adjacent to the existing structure down to the bottom of the perimeter beam. From that elevation, excavate in a benched (stair–step) pattern at approximately 1H:1V until the bottom of the proposed structural pad is reached. Place and compact select fill in accordance with the Geotechnical report to final grade.

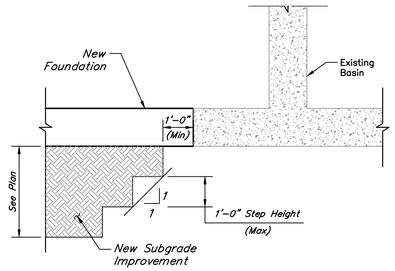

E. Design parameters for straight drilled shaft:

Drilled Pier Design Summary	
Item	Design Parameter
Minimum Concrete Pier Length	20 feet
Minimum Pier Shaft Diameter	18 Inches
Minimum Pier Spacing	3 diameter center–to center
Allowable End Bearing Pressure	Net dead plus sustained live load–6,700 psf
Allowable Side Friction	Net total load–10,000 psf 650 psf

V. STRUCTURAL STEEL:

A. Structural steel shall conform to the latest AISC "Specification for the design,fabrication and erection of structural steel for buildings".

B. Structural steel materials shall comply with the following specifications:

Wide Flange	ASTM A992
All Connection Plates for Canopy Angles. Bars. Channels	ASTM A572 Gr. 50 ASTM A36 U.N.O.
HSS (Rectangular or Square)	ASTM A500 GR B (Fy=46 KSI)
Cold Formed Light Gauge Shapes	ASTM A–607 Gr. 50

C. Field connections shall be bolted, except as otherwise shown or noted.

D. All welding shall conform to the latest specification of the American Welding Society. All welded connections shall be made with AWS A5.1 or A5.5 E70 XX electrode.

E. Anchor bolts and misc embedded steel ------ ASTM A36.
Anchor bolts which are submerged, located above a liquid surface, or are in a corrosive atmosphere -------- 316 SS.

F. All equipment anchor bolt dimensions and locations shall be verified from certified vendor drawings, prior to construction.

G. Unless noted, anchor bolts and expansion bolts shall be stainless steel.

H. All embedded items and steel structures exposed to weather to be hot–dip galvanized.

VI. CONCRETE MASONRY:

A. Concrete masonry units and construction to be per "National concrete masonry association" recommendations (where not covered by the local building code).

B. All masonry grout to be per table 1 (this sheet); all mortar per table 2 (this sheet).

C. Fill cells with grout at vertical reinforcement.

D. Cast–in–anchors embedded in concrete masonry shall extend beyond reinforcing 1" min.

E. Compressive strength of masonry shall be 2000 PSI at 28 days.

F. CMU shall be placed in a running bond pattern unless specifically noted otherwise on the plans.

G. Control joints shall be located at the following:
- At all changes in wall height
- At all changes in wall thickness such as Chases, columns or pilasters.
- At (above) Movement joists in foundations and floors.
- At (below) Movement joists in roofs and floors that bear on a wall.
- Adjacent to corners of walls or intersections within a distance of one–half the normal control joint spacing.
- Control joints shall be spaced no more than 25'–0" apart.

H. For location of vertical and horizontal reinforcement see typical elevation view.

J. For minimum rebar lap length see table 3.

DESIGN CRITERIA:

A. Dead load materials assumed in the design are shown on the mechanical and structural drawings.

B. Design code is IBC 2021

C. Live Loads:

Location	Uniform Load	Concentrated Load
Roof	20 PSF	
Ground Floor	100 PSF Reducible	1000 Lbs
Storage Rooms	150 PSF Reducible	
Mechanical Rooms	150 PSF Non–Reducible	Equip. Weight
Balconies	100 PSF Reducible	
Operation Area		
Stairs and Exits	100 PSF Reducible	300 Lbs
Handrails and Guardrails	50 PSF or 200 Lbs applied at top rail in any direction. 50 Lbs in any direction applied at intermediate rails.	
Grab Bars		250 Lbs any Direction

D. Wind Loads:

Basic Wind Speed	115 MPH (3–Sec Gust)
Risk Category	III
Exposure Category	C
Internal Pressure Coeff	+/– 0.18
Components & Cladding	Per ASCE 7–22

E. Seismic Load:

Seismic Importance Factor	1.25
Spectral Response Acceleration (Ss / S1)	0.066 / 0.038
Site Class	D
Spectral Response Coeff. (Sds / Sd1)	0.060 / 0.058
Seismic Design Category	A

F. Stairs, handrails, guardrails and grab bars (including attachment to structure) shall be designed by the fabricator for the loads indicated in the referenced building code. Shop drawings shall be sealed by a professional engineer in the state of Texas.

TENSION DEVELOPMENT LENGTHS AND TENSION LAP SPLICE LENGTHS GRADE 60 (UNCOATED) REINFORCEMENT

BAR SIZE	NORMAL WEIGHT					
	F'c = 3000		F'c = 4000		F'c = 5000	
	CLASS A 1.0Ld	CLASS B 1.3Ld	CLASS A 1.0Ld	CLASS B 1.3Ld	CLASS A 1.0Ld	CLASS B 1.3Ld
#3	17	22	15	19	13	17
#4	22	29	19	25	17	23
#5	28	36	24	31	22	28
#6	33	43	29	37	26	34
#7	48	63	42	54	38	49
#8	55	72	48	62	43	56
#9	62	81	54	70	48	63
#10	70	91	61	79	54	71
#11	78	101	67	87	60	78

Notes:
1. *All lengths shown in the table are in inches.*
2. *Ld = Tension development length.*
3. *The table to the left is valid for*
   a. *Beams and columns where concrete cover > = db, c/c bar spacing > = 2db, and with stirrups or ties throughout Ld are not less than the code minimum.*
   b. *Other elements such as slabs, walls, etc. where concrete cover > = db, c/c bar spacing > = 3db.*
4. *For top bars, multiply the splice lengths by 1.30. Top bars require a minimum of 12" of fresh concrete below bar.*
5. *When bars of a different size are lap spliced in tension, splice length shall be the larger of Ld of the larger bar and compression lap splice length of smaller bar.*
6. *Bars spliced by non–contact lap spliced shall not be spaced transversely farther apart than the smaller of one–fifth the required lap splice length and 6".*

DEVELOPMENT LENGTHS OF STANDARD HOOKS IN TENSION GRADE 60 (UNCOATED) REINFORCEMENT

BAR SIZE	NORMAL WEIGHT					
	F'c = 3000		F'c = 4000		F'c = 5000	
	Lhb	0.7Lhb	Lhb	0.7Lhb	Lhb	0.7Lhb
#3	9	6	8	6	7	6
#4	11	8	10	7	9	6
#5	14	10	12	9	11	8
#6	17	12	15	10	13	9
#7	20	14	17	12	15	11
#8	22	16	19	14	17	12
#9	25	18	22	15	20	14
#10	28	20	25	17	22	16
#11	31	22	27	19	24	17

Notes:
1. *All lengths shown in the table are in inches.*
2. *Lhb = Tension development length.*
3. *Ldh = Lhb, unless conditions of Item 4 are satisfied.*
4. *Ldh = 0.7 Lhb, when side cover normal to plane of hook is not less than 2 ½ inches and for 90° hook, cover on bar extension beyond hook shall not be less than 2 inches.*
5. *Hooks shall not be considered effective in developing bars in compression.*



TABLE 3

MIN REBAR LAP SCHEDULE FOR f'm = 2,000 psi

BAR SIZE	6" CMU	8" CMU	10" CMU	12" CMU
#3	12"	12"	12"	12"
#4	20"	15"	12"	12"
#5	32"	23"	18"	15"
#6	54"	43"	34"	28"
#7	NA	60"	46"	38"
#8	NA	72"	71"	57"
#9	NA	NA	82"	74"

TABLE 1. GROUT PROPORTIONS BY VOLUME

TYPE	PARTS BY VOLUME OF PORTLAND CEMENT OR PORTLAND BLAST–FURNACE SLAG CEMENT	PARTS BY VOLUME OF HYDRATED LIME OR LIME PUTTY	AGGREGATE MEASURED IN DAMP, LOOSE CONDITION	
			FINE	COARSE
FINE GROUT (<4" WIDE CAVITY)	*1*	*0 TO 1/10*	*2¼ TO 3 TIMES THE SUM OF THE VOLUMES OF THE CEMENTITIOUS MATERIAL*	....
FINE GROUT (>4" WIDE CAVITY)	*1*	*0 TO 1/10*	*2¼ TO 3 TIMES THE SUM OF THE VOLUMES OF THE CEMENTITIOUS MATERIAL*	*1 TO 2 TIMES THE SUM OF THE VOLUMES OF THE CEMENTITIOUS MATERIAL*

TABLE 2. MORTAR PROPORTIONS BY VOLUME

MATERIAL	TYPE	*PORTLAND CEMENT OR BLENDED CEMENT*	*MASONRY CEMENT*	*HYDRATED LIME OR LIME PUTTY*	*AGGREGATE RATIO (MEASURED IN DAMP, LOOSE CONDITION)*
CEMENT LIME	S	1	....	*OVER ¼ TO ½*	*NOT LESS THAN 2¼ & NOT MORE THAN 3 TIMES THE SUM OF THE SEPARATE VOLUMES OF CEMENTITIOUS MATERIALS*
MASONRY/ CEMENT	S	*½*	*1*	....	

NO.	DATE	REVISIONS	APP.

WILBARGER CREEK M.U.D. No. 2
TRAVIS COUNTY, TEXAS

WASTEWATER TREATMENT PLANT EXPANSION TO 1.5 MGD

STRUCTURAL NOTES

QUIDDITY
Texas Board of Professional Engineers and Land Surveyors Reg. No. F-23290
912 South Capital of Texas Hwy, Suite 300 • Austin, TX 78746 • 512.441.9493

SCALE:	AS SHOWN	DGN. BY:	RMERHI
DATE:	JULY 2026	DWN. BY:	SFUENTES
JOB NO.	0A651–0021–02	DWG. NO.	
SUBMITTED:		SURV. BY:	
		F.B. NO.	

STATE OF TEXAS
AHMAD DANESHVAR
132678
LICENSED PROFESSIONAL ENGINEER

07/06/2026

0–S–1
SHEET NO. 124 OF 230

0 1 2 3 4 5 ORIGINAL SCALE IN INCHES FOR REDUCED PLANS

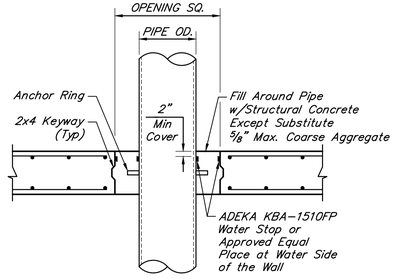

PIPE DIA.	OPENING SQ. (in)
4" – 20"	Pipe Nominal Diameter + 10"
24" – 54"	Pipe Nominal Diameter + 12"

PIPE (W/ANCHOR RING) OPENING DETAIL

SCALE 3/4" = 1'-0"

1

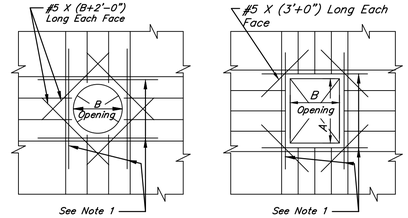

CIRCULAR RECTANGULAR

NOTE:

1. Provide additional bars equal to one-half of bars interrupted at each side of opening at 3" C/C. These bars shall be original sizes and lengths as those of the interrupted bars. (Typical for openings in slabs and walls.)
2. Additional bars are extended minimum development length beyond opening edge.
3. For openings 1'-0" or less, the slab steel can be respaced without additional reinforcing.

ADDITIONAL REINFORCING STEEL AT PIPE OPENINGS

NOT TO SCALE

2

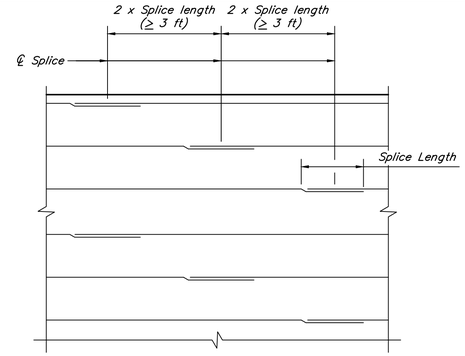

REBAR SPLICE LENGTH

#5- 2'-6" #6- 3'-0"
#7- 3'-6" #8- 4'-0"

HORIZONTAL WALL REINFORCING SPLICE LOCATION DETAILS

SCALE 3/8" = 1'-0"

3

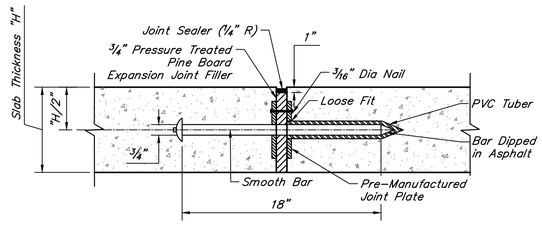

DOWELED EXPANSION JOINT

SCALE: 1 1/2 " = 1'-0"

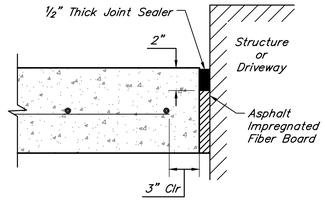

ISOLATION JOINT (IJ)

NOT TO SCALE

4

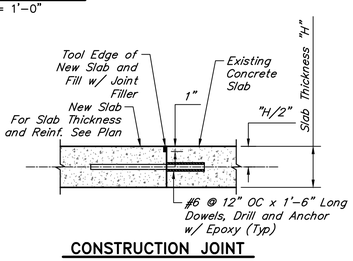

CONSTRUCTION JOINT AT EXISTING PAVEMENT

NOT TO SCALE

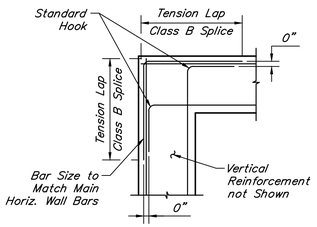

PLAN

CORNER DETAILS

3/4" = 1'-0"

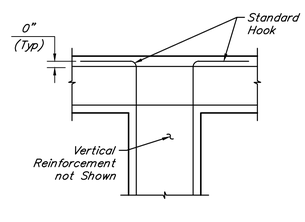

PLAN

WITHOUT CONSTRUCTION JOINT

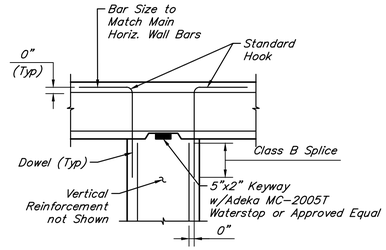

PLAN

WITH CONSTRUCTION JOINT

INTERSECTION DETAILS

1/2" = 1'-0"

5

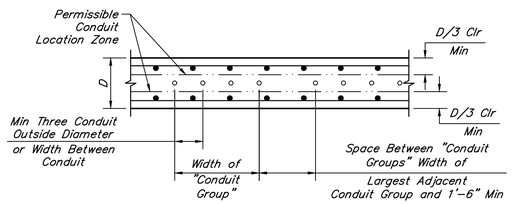

ELECTRICAL CONDUIT LOCATION IN FLOOR SLAB

NOTES:

1. Not more than five conduits shall be placed within a "Conduit Group" with three conduit diameters or widths of largest conduit center to center between individual conduits. Minimum 6" clear.
2. Provide embedded item free space between "Conduit Groups" equaling to or exceeding the width of the largest adjacent Conduit Group. Minimum Space between Conduits Groups shall not be less than 1'-6".
3. Conduits shall not be placed within a zone 1'-6" from face of supports.
4. Conduits can not be secured to scheduled slab/beam reinforcing. Conduits, when penetrating a beam, shall penetrate at a 90° angle to the longitudinal axis of the beam.
6. Conduit placement shall be planned to minimize the number of cross overs required. Total height of conduits shall be limited to $\frac{1}{3}$ the slab thickness. Conduit cross over shall occur within the middle third of the slab.

7

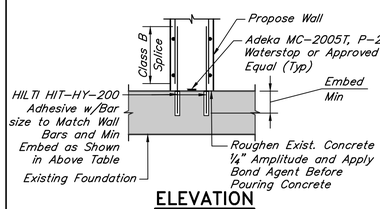

ELEVATION

NEW WALL TO EXISTING FOUNDATION CONNECTION

SCALE: 1/2" = 1'-0"

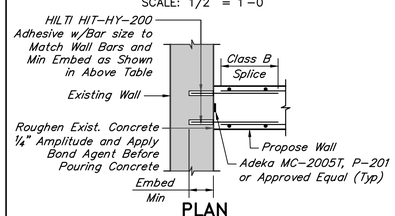

PLAN

NEW WALL TO EXISTING WALL CONNECTION

SCALE: 1/2" = 1'-0"

BAR SIZE	EMBED (MIN)
#5	7 1/2"
#6	9"
#7	10 1/2"
#8	12"
#9	13 1/2"

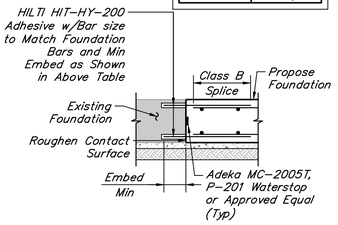

ELEVATION

NEW FOUNDATION TO EXISTING FOUNDATION CONNECTION

SCALE: 1/2" = 1'-0"

8

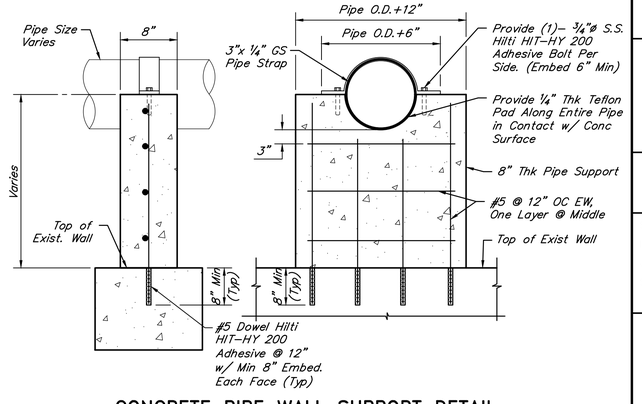

CONCRETE PIPE WALL SUPPORT DETAIL

NOT TO SCALE

9

NO.	DATE	REVISIONS	APP.

WILBARGER CREEK M.U.D. No. 2
TRAVIS COUNTY, TEXAS

WASTEWATER TREATMENT PLANT EXPANSION TO 1.5 MGD

STRUCTURAL DETAILS – SHEET 1 OF 3

QUIDDITY
Texas Board of Professional Engineers and Land Surveyors Reg. No. F-23290
912 South Capital of Texas Hwy, Suite 300 • Austin, TX 78746 • 512.441.9493

SCALE:	AS SHOWN	DGN. BY:	RMERHI
DATE:	JULY 2026	DWN. BY:	SFUENTES
JOB NO.	0A651-0021-02	DWG. NO.	
SUBMITTED:		SURV. BY:	
		F.B. NO.	

STATE OF TEXAS
AHMAD DANESHVAR
132678
LICENSED PROFESSIONAL ENGINEER

07/06/2026

0-S-2

SHEET NO. 125 OF 230

C:\Users\asalgado\DC\ACCDocs\Quiddity – Water-\0A651-0021-02 _ WILBARGER WWTP EXP. 1.5 MGD\Project Files\PLANS\STRUCTURAL\STRUC A0-STRUCTURAL NOTES.dwg, Jul 01, 2026 – 11:08am, asalgado

ORIGINAL SCALE IN INCHES FOR REDUCED PLANS

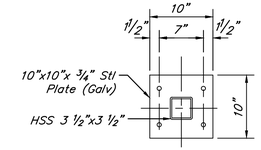

PLATE
SCALE 1"=1'-0"

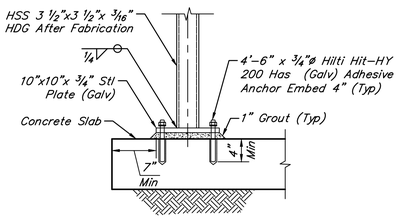

VIEW
SCALE 1"=1'-0"

DEVICE MOUNTING POST DETAIL
SCALE 1"=1'-0"

1

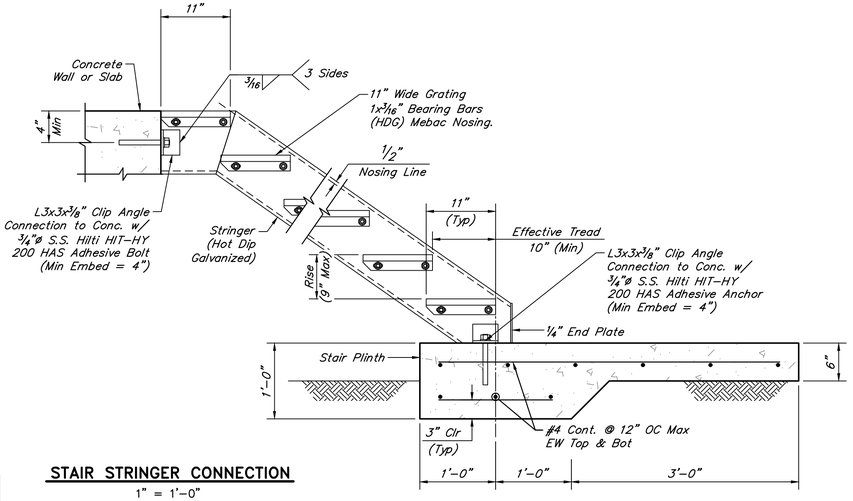

STAIR STRINGER CONNECTION
1" = 1'-0"

2

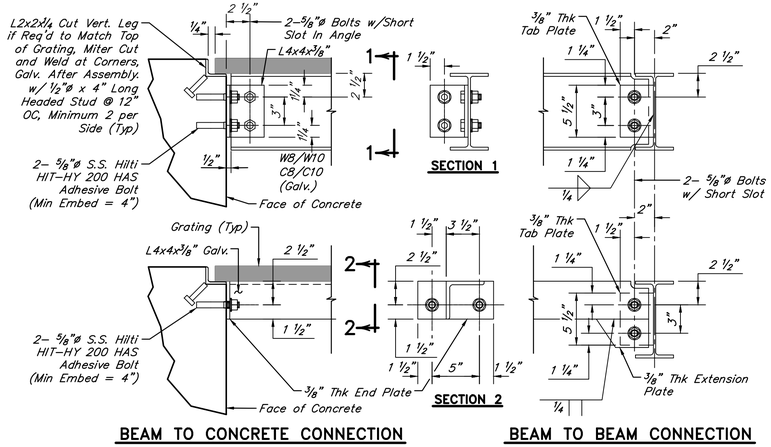

BEAM TO CONCRETE CONNECTION

BEAM TO BEAM CONNECTION

GRATING ANGLE SUPPORT AND BEAM
WHEN PROVIDING ALUMINUM OR STAINLESS STEEL GRATING AND 1/8" x 1" NEOPRENE, TEFLON OR UHMW POLYETHYLENE PAD, ADHERE TO ANGLE.
1 1/2" = 1'-0"

3

NOTES:

1. All liquid tight flexible conduit runs shall be limited to 3'-0" or less.

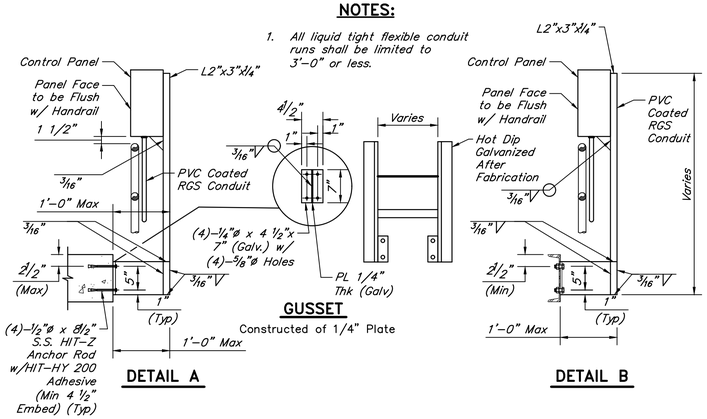

DETAIL A

DETAIL B

CONTROL PANEL OVER HANDRAIL MOUNTING DETAIL
3/4" = 1'-0"

4

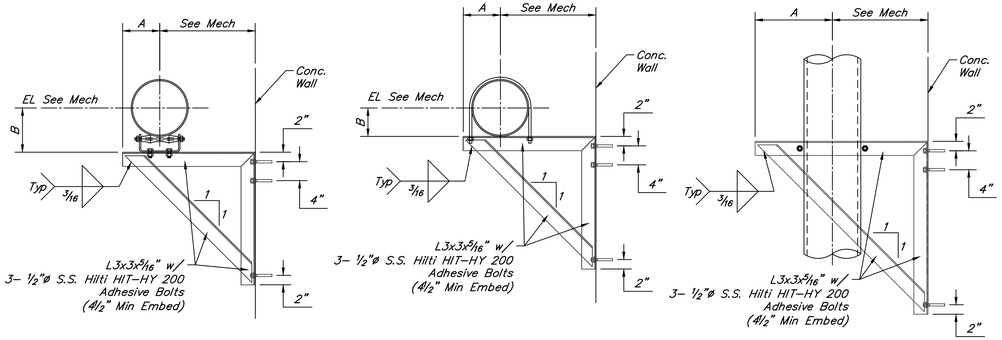

PIPE SUPPORT TYPE "A"
WITH ROLLER CHAIR

PIPE SUPPORT TYPE "B"
WITH U-BOLT

PIPE SUPPORT TYPE "C"
WITH U-BOLT

PIPE SUPPORT SCHEDULE

PS No.	PS Type	PIPE OD (in)	Dimensions A (in)	Dimensions B (in)
PS 1	A	10	12	10
PS 2	A	6	9	7
PS 3	C	8	10	---
PS 4	C	12	12	---
PS				
PS				

PIPE SUPPORT DETAIL

PIPE SUPPORTS WHICH ARE SUBMERGED, LOCATED ABOVE A LIQUID SURFACE, OR ARE IN A CORROSIVE ATMOSPHERE SHALL BE STAINLESS STEEL TYPE 316. OTHERWISE, IT SHALL BE HOT DIP GALVANIZED.

5

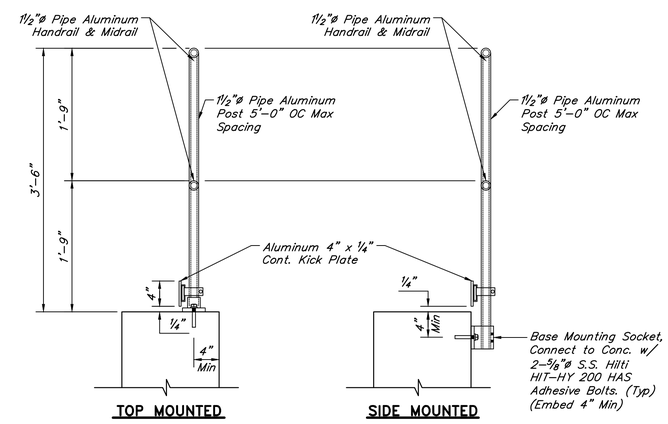

TOP MOUNTED

SIDE MOUNTED

ALUMINUM HANDRAIL WITH KICK PLATE

6

NO.	DATE	REVISIONS	APP.

WILBARGER CREEK M.U.D. No. 2
TRAVIS COUNTY, TEXAS

WASTEWATER TREATMENT PLANT EXPANSION TO 1.5 MGD

STRUCTURAL DETAILS – SHEET 2 OF 3

QUIDDITY
Texas Board of Professional Engineers and Land Surveyors Reg. No. F-23290
912 South Capital of Texas Hwy, Suite 300 • Austin, TX 78746 • 512.441.9493

SCALE:	AS SHOWN	DGN. BY:	RMERHI
DATE:	JULY 2026	DWN. BY:	SFUENTES
JOB NO.	0A651-0021-02	DWG. NO.	
SUBMITTED:		SURV. BY:	
		F.B. NO.	

STATE OF TEXAS
AHMAD DANESHVAR
132678
LICENSED PROFESSIONAL ENGINEER

07/06/2026

0-S-3
SHEET NO. 126 OF 230

C:\Users\asalgado\DC\ACCDocs\Quiddity - Water-\0A651-0021-02 _ WILBARGER WWTP EXP. 1.5 MGD\Project Files\PLANS\STRUCTURAL\STRUC A0-STRUCTURAL NOTES.dwg, Jul 01, 2026 - 11:08am, asalgado

0 1 2 3 4 5 ORIGINAL SCALE IN INCHES FOR REDUCED PLANS

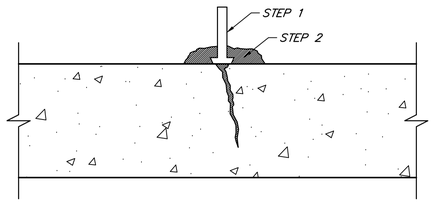

1. CLEAN THE CONCRETE SURFACE AND SET PORTING DEVICES OVER CRACKS.
2. PLACE MIXED SIKADUR 31, HI–MOD GEL EPOXY RESIN ADHESIVE, OR APPROVED EQUAL, OVER CRACKS AND AROUND EACH INJECTION PORT A MIN. OF 1" WIDE BY ⅛" THICK.
3. ALLOW SUFFICIENT TIME FOR EPOXY RESIN ADHESIVE CAP SEAL TO SET BEFORE INJECTING.
4. WHEN THE CAP SEAL HAS CURED, INJECT SIKADUR 35, HI–MOD LV, OR APPROVED EQUAL, WITH STEADY PRESSURE. PER MANUFACTURER INSTRUCTION.
5. USE AUTOMATED INJECTION EQUIPMENT OR MANUAL METHOD.

CRACK NO. 1 FILLER/CAP SEAL @ CRACKS > 1/8"

1

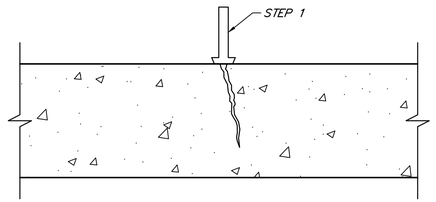

1. CLEAN THE CONCRETE SURFACE AND SET PORTING DEVICES OVER CRACKS. PER MANUFACTURER INSTRUCTION.
2. INJECT SIKAFIX HH+HYDROPHOBIC URETHANE OR APPROVED EQUAL.
3. USE AUTOMATED INJECTION EQUIPMENT OR MANUAL METHOD.
4. BEGIN INJECTING AT THE BOTTOM OF THE CRACK AND WORK VERTICALLY.

CRACK NO. 2 FILLER @ HAIRLINE CRACKS

2

Provide Min Cover of 3" for Bottom of Beams, 1½" for Sides of Beams, and 1 ½" for Bottom of Slabs

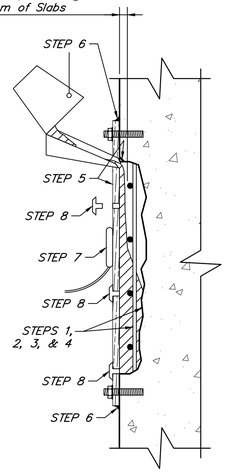

1. BREAK–OUT CRACKED OR SPALLED CONCRETE AND REMOVE ANY FORM OR OTHER DEBRIS UNTIL SOLID CONCRETE IS REACHED.
2. REPLACE STEEL REINFORCEMENT AS DIRECTED BY ENGINEER. FOR REINFORCING REPLACEMENT, REFER TO DETERIORATED REINFORCING REPLACEMENT DETAIL.
3. PREPARE SURFACE ACCORDING TO THE SIKACRETE 211 SPECIFICATIONS AND/OR MANUFACTURER'S RECOMMENDATIONS.
4. PRE–WET SURFACE TO SSD. APPLY BOND AGENT SIKA ARMATEC 110 EPOCEM, OR APPROVED EQUAL, TO REINFORCING STEEL.
5. SET FORM AND CHIP SPOT FOR POUR BOX. APPLY RELEASE AGENT TO FORM, OR USE PLASTIC LINED PLYWOOD.
6. RUN BEAD OF SIKAFLEX 1A, OR APPROVED EQUAL, AROUND FORM EDGE, LET CURE, THEN ANCHOR FORM. FILL WITH WATER TO CHECK FOR WATER TIGHTNESS. LET DRAIN TO NO FREE STANDING WATER.
7. VIBRATE FORM WHILE POURING SIKACRETE 211, OR APPROVED EQUAL.
8. VENT TO BE CAPPED WHEN STEADY FLOW IS EVIDENT.
9. STRIP FORM WHEN APPROPRIATE.
10. DRY PACK ANCHOR HOLES WITH MORTAR.

FORM AND POUR (VERTICAL) CONCRETE REPAIR

3

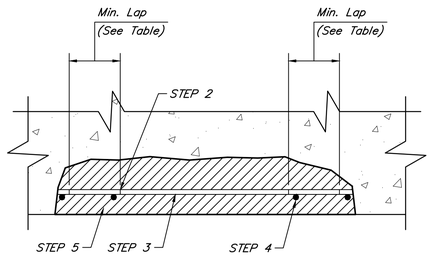

1. SHORE STRUCTURE AS REQUIRED PRIOR TO MODIFICATIONS OF STRUCTURAL CONNECTIONS.
2. EXPOSED REINFORCING STEEL SHOULD BE MECHANICALLY CLEANED OR SAND BLASTED TO REMOVE ALL TRACES OF RUST.
3. DETERMINE STEEL SECTION LOSS FOR EACH EXPOSED REINFORCING BAR. REPLACE BARS WHERE MORE THAN 25% AREA LOSS HAS OCCURRED, AS DIRECTED BY THE ENGINEER.
4. SPLICE EXISTING BAR W/ A NEW BAR (ASTM A615 GRADE 60) OF STEEL CROSS SECTIONAL AREA EQUIVALENT TO 68% OF THE CROSS SECTIONAL AREA OF THE EXISTING BAR.
5. COMPLETE CONCRETE REPAIR. (SEE DETAIL)

DETERIORATED REINFORCING REPLACEMENT

BAR SIZE	DIAMETER (IN.)	CROSS–SECTIONAL AREA (IN^2)	MIN. LAP (IN.)
#3	0.375	0.11	12
#4	0.500	0.20	15
#5	0.625	0.31	19
#6	0.750	0.44	23
#7	0.875	0.60	33
#8	1.000	0.79	37
#9	1.128	1.00	42
#10	1.270	1.27	47
#11	1.410	1.56	52

NOTE:

LAP LENGTHS SHOWN ARE FOR COVERS OF AT LEAST 1.0 BAR DIAMETER AND HORIZONTAL C.C. SPACING OF AT LEAST 2.0 BAR DIAMETERS. IF THE LATTER CANNOT BE ACHIEVED ON A BEAM, CRACK FILLER/CAP SEAL DETAIL MAY BE USED. OTHERWISE, IF AN ADEQUATE SPLICE LENGTH CANNOT BE ACHIEVED, USE AN APPROVED MECHANICAL OR WELDED SPLICE CAPABLE OF DEVELOPING AT LEAST 125% OF THE SPECIFIED YIELD STRENGTH OF THE BAR. ALL WELDING SHALL CONFORM TO "STRUCTURAL WELDING CODE – REINFORCING STEEL" (ANSI/AWS D1.4). NEW REINFORCING TO BE WELDED SHALL CONFORM TO ASTM A706. IF A CHEMICAL ANALYSIS OF THE EXISTING BARS IS NOT KNOWN OR OBTAINED, THEN THE EXISTING BARS SHOULD BE PREHEATED PER ANSI/AWS D1.4.

4

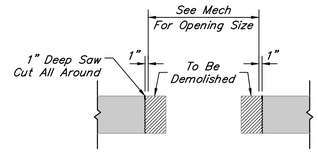

1. SAW CUT 1" DEEP ALL AROUND DEMOLISHED AREA AND BREAK OUT EXISTING CONCRETE W/ CHIPPING HAMMER TO KEEP REMAINING FLOOR UNDAMAGED. DO NOT OVER CUT CORNERS.

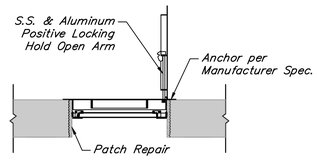

2. PRE–WET SURFACE TO SSD. APPLY BOND AGENT "SIKA ARMATEC 110 EPOCEM", OR APPROVED EQUAL.
3. APPLY ABOUT 1" THICKNESS "SIKA TOP 122 PLUS" AS REPAIR MORTAR. IT MUST BE SCRUBBED INTO THE SUBSTRATE, FILLING ALL PORES AND VOIDS. AFTER FILLING REPAIR, CONSOLIDATE, THEN SCREED. ALLOW MORTAR TO SET TO DESIRED STIFFNESS, THEN FINISH WITH WOOD OR SPONGE FLOAT FOR A SMOOTH SURFACE.
4. COVER EXPOSED FACE WITH HIGH SOLID EPOXY IN TWO COATS. TOTAL DRY FILM THICKNESS TO BE 125 MILS AVG., 100 MILS MIN. FOR SUPPLEMENTARY INFO, REFER TO PROTECTIVE COATING SPEC (09921).
5. INSTALL HATCH ASSEMBLY PER MANUFACTURER REQUIREMENTS. ANCHOR FRAME TO REPAIRED CONCRETE PER MANUFACTURER INSTRUCTION. REF. MECH. SHEETS FOR HATCH LOCATION AND ASSEMBLY DETAIL.

LIFT STATION HATCH INSTALLATION DETAIL

5

NO.	DATE	REVISIONS	APP.

WILBARGER CREEK M.U.D. No. 2
TRAVIS COUNTY, TEXAS

WASTEWATER TREATMENT PLANT EXPANSION TO 1.5 MGD

STRUCTURAL DETAILS – SHEET 3 OF 3

QUIDDITY
Texas Board of Professional Engineers and Land Surveyors Reg. No. F-23290
912 South Capital of Texas Hwy, Suite 300 • Austin, TX 78746 • 512.441.9493

SCALE:	NO SCALE	DGN. BY:	RMERHI
DATE:	JULY 2026	DWN. BY:	SFUENTES
JOB NO.	0A651–0021–02	DWG. NO.	
SUBMITTED:		SURV. BY:	
		F.B. NO.	

STATE OF TEXAS
AHMAD DANESHVAR
132679
LICENSED PROFESSIONAL ENGINEER
07/06/2026

0–S–4
SHEET NO. 127 OF 230

C:\Users\asalgado\DC\ACCDocs\Quiddity – Water–\0A651–0021–02 _ WILBARGER WWTP EXP. 1.5 MGD\Project Files\PLANS\STRUCTURAL\STRUC A0–STRUCTURAL NOTES.dwg, Jul 01, 2026 – 11:08am, asalgado

0 1 2 3 4 5 ORIGINAL SCALE IN INCHES FOR REDUCED PLANS

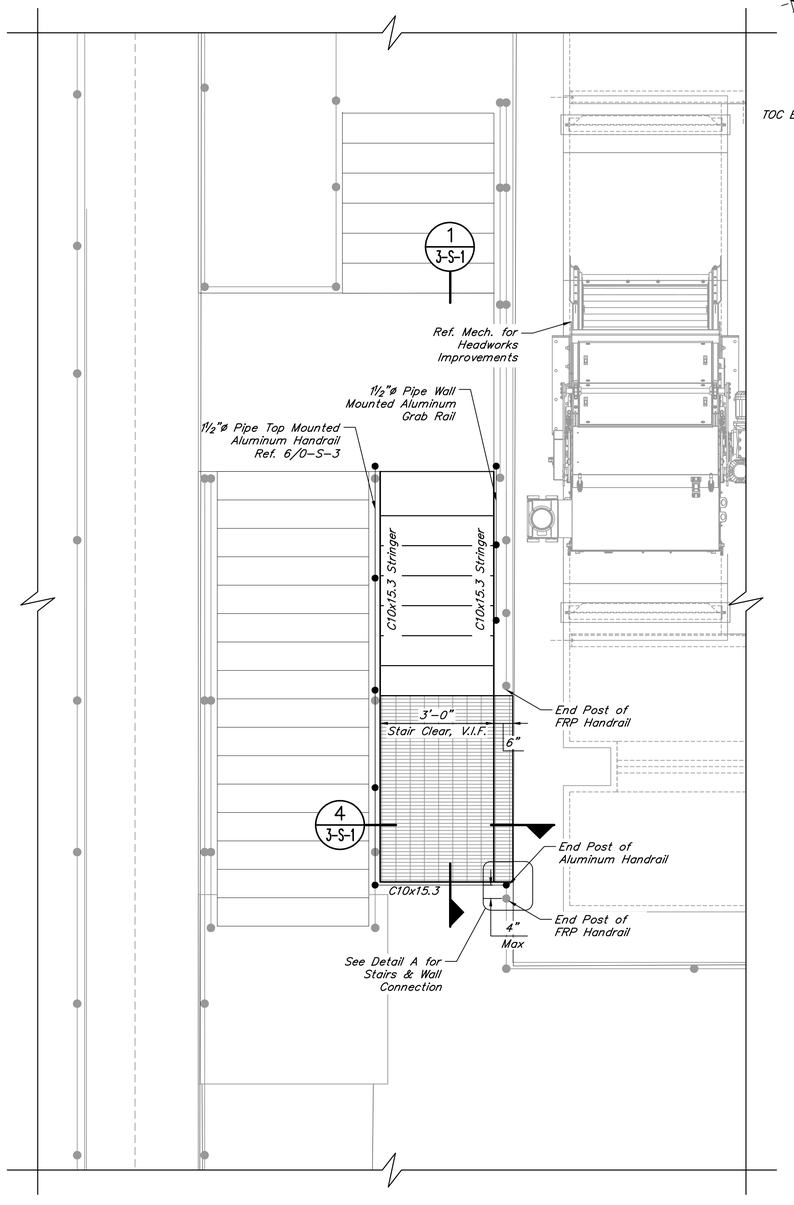

HEADWORKS STAIRS ADDITION PLAN
SCALE: 1/2" = 1'-0"

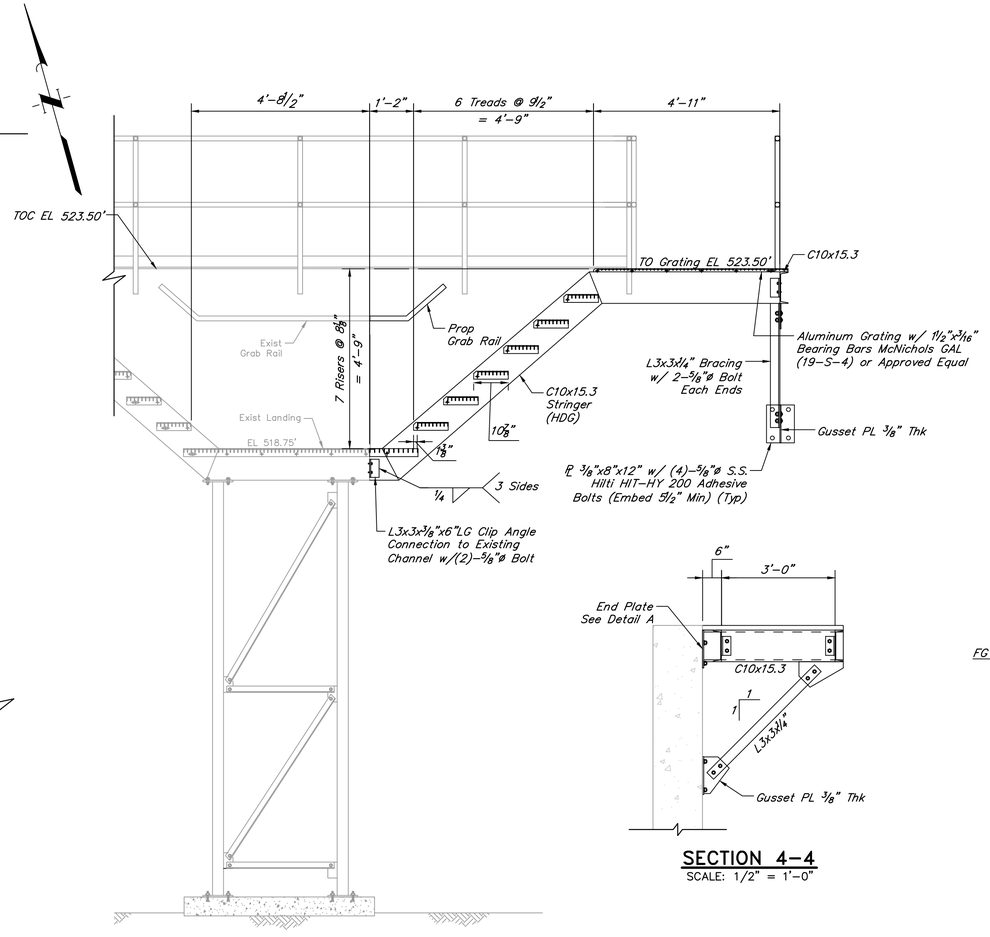

SECTION 1-1
SCALE: 1/2" = 1'-0"

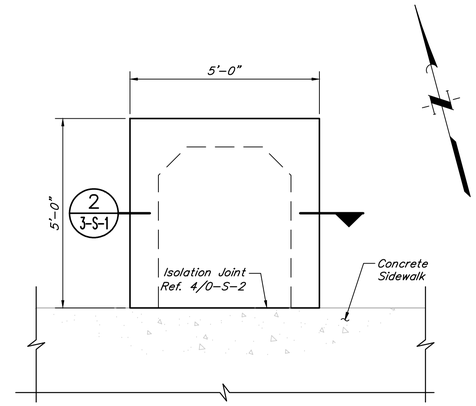

CONTROL PANEL PAD PLAN
SCALE: 1/2" = 1'-0"

SECTION 4-4
SCALE: 1/2" = 1'-0"

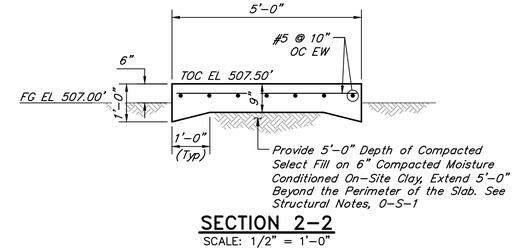

SECTION 2-2
SCALE: 1/2" = 1'-0"

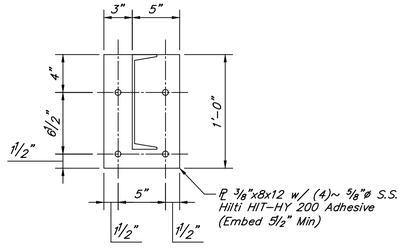

DETAIL A
SCALE: 1 1/2" = 1'-0"

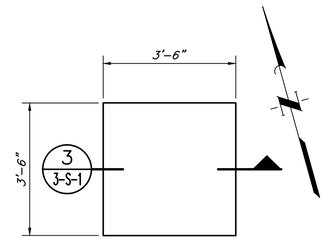

PULL BOX PAD FOUNDATION
SCALE: 1/2" = 1'-0"

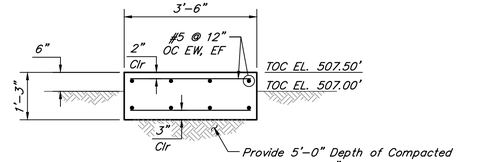

SECTION 3-3
SCALE: 1/2" = 1'-0"

NO.	DATE	REVISIONS	APP.

WILBARGER CREEK M.U.D. No. 2
TRAVIS COUNTY, TEXAS

WASTEWATER TREATMENT PLANT EXPANSION TO 1.5 MGD

ELEVATED HEADWORKS STAIRS ADDITION & ELECTRICAL PADS FOUNDATIONS

QUIDDITY
Texas Board of Professional Engineers and Land Surveyors Reg. No. F-23290
912 South Capital of Texas Hwy, Suite 300 • Austin, TX 78746 • 512.441.9493

SCALE:	1/2" = 1'-0"	DGN. BY:	RMERHI
DATE:	JULY 2026	DWN. BY:	ASALGADO
JOB NO.	0A651-0021-02	DWG. NO.	
SUBMITTED:		SURV. BY:	
		F.B. NO.	

STATE OF TEXAS
AHMAD DANESHVAR
132678
LICENSED PROFESSIONAL ENGINEER
07/06/2026

3-S-1
SHEET NO. 128 OF 230

C:\Users\asalgado\DC\ACCDocs\Quiddity - Water-\0A651-0021-02 _ WILBARGER WWTP EXP. 1.5 MGD\Project Files\PLANS\STRUCTURAL\STRUC A03-HEADWORKS STAIRS ADDITION.dwg, Jul 06, 2026 - 5:58pm, asalgado

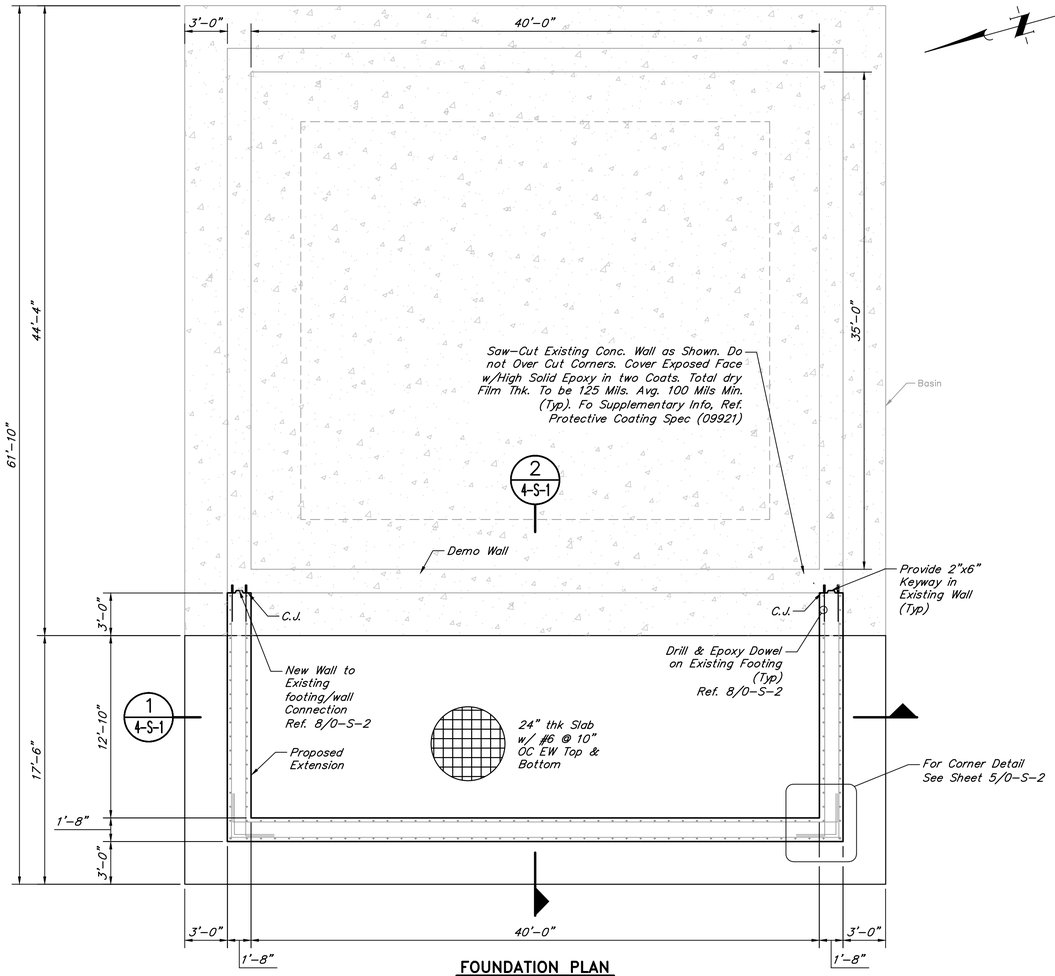

FOUNDATION PLAN
SCALE: 3/16" = 1'-0"

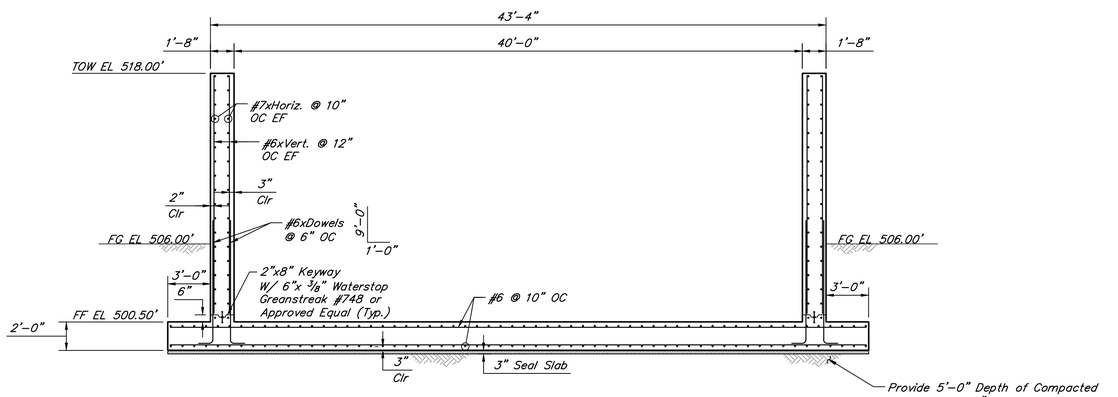

SECTION 1-1
SCALE: 3/16" = 1'-0"

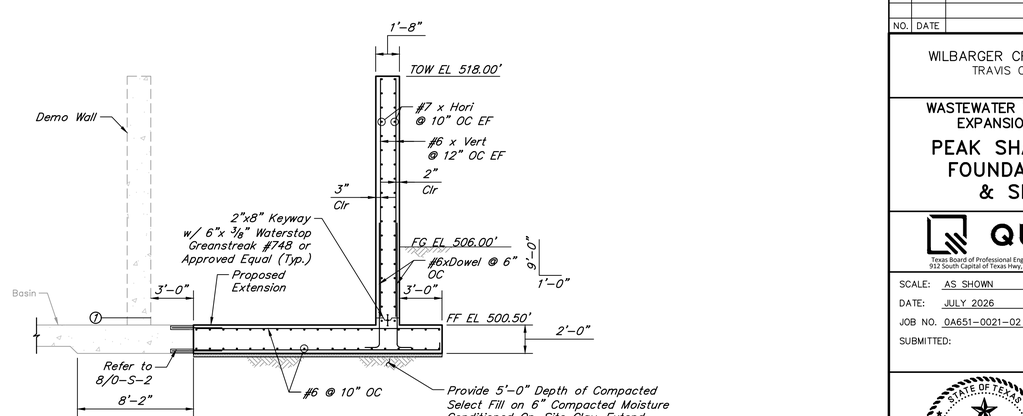

SECTION 2-2
SCALE: 3/16" = 1'-0"

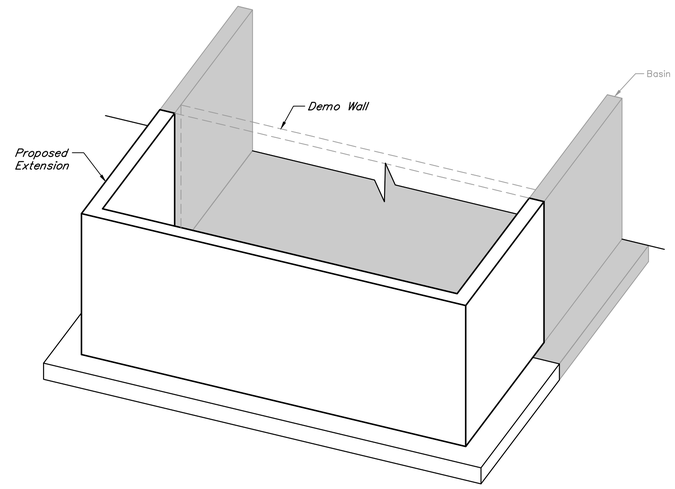

3D VIEW
SCALE: 1/8" = 1'-0"

Note:
(7) *Contractor can leave up to 6" of concrete on the sides and the floor as needed to accommodate wall demolition.*

NO.	DATE	REVISIONS	APP.

WILBARGER CREEK M.U.D. No. 2
TRAVIS COUNTY, TEXAS

WASTEWATER TREATMENT PLANT EXPANSION TO 1.5 MGD

PEAK SHAVING BASIN FOUNDATION PLAN & SECTIONS

QUIDDITY
Texas Board of Professional Engineers and Land Surveyors Reg. No. F-23290
912 South Capital of Texas Hwy, Suite 300 • Austin, TX 78746 • 512.441.9493

SCALE:	AS SHOWN	DGN. BY:	JROBINSON
DATE:	JULY 2026	DWN. BY:	ASALGADO
JOB NO.	0A651-0021-02	DWG. NO.	
SUBMITTED:		SURV. BY:	
		F.B. NO.	

STATE OF TEXAS
AHMAD DANESHVAR
132678
LICENSED PROFESSIONAL ENGINEER
07/06/2026

4-S-1
SHEET NO. 129 OF 230

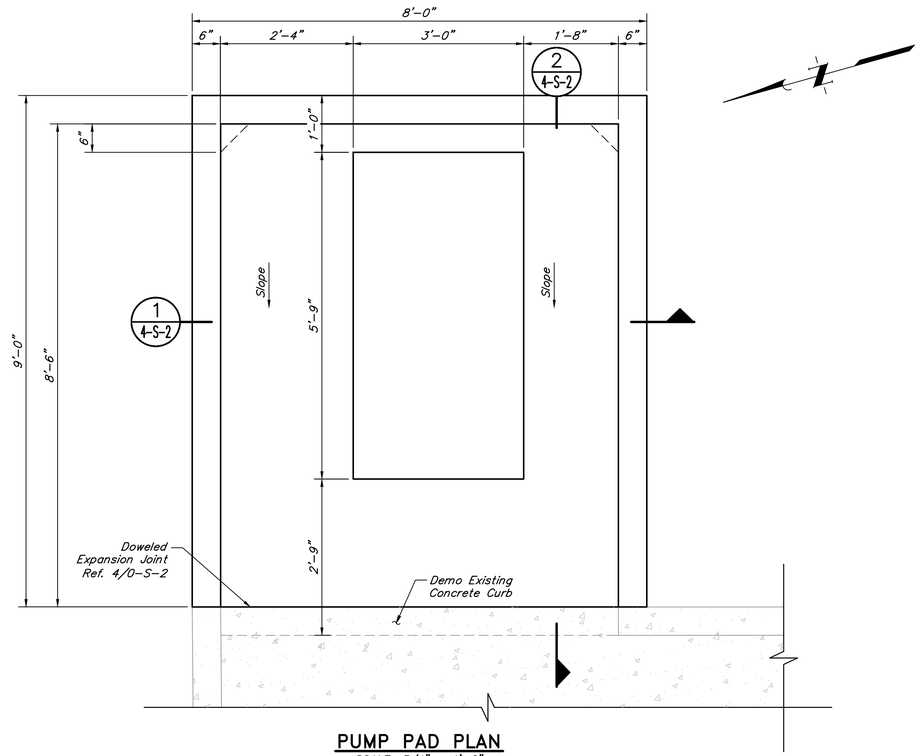

PUMP PAD PLAN
SCALE: 3/4" = 1'-0"

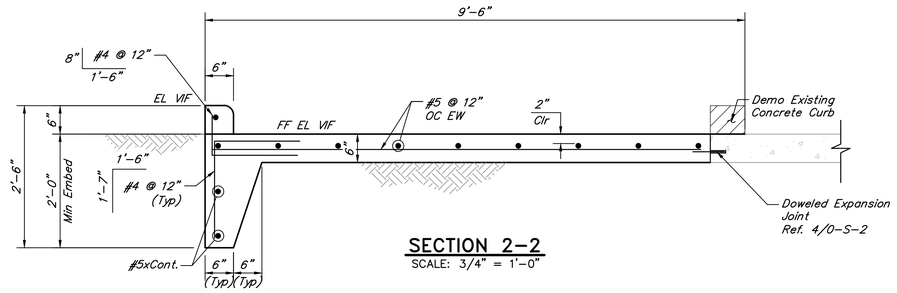

SECTION 2-2
SCALE: 3/4" = 1'-0"

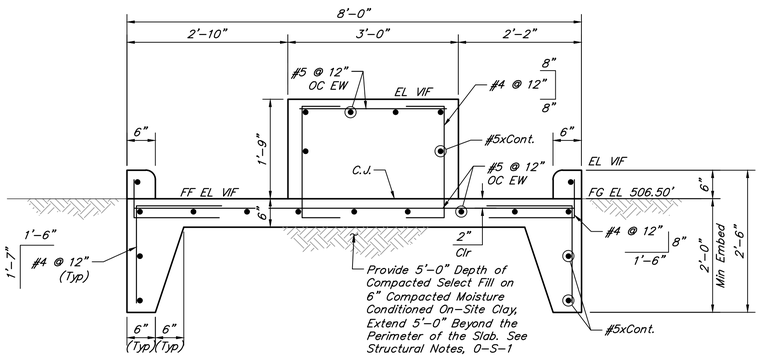

SECTION 1-1
SCALE: 3/4" = 1'-0"

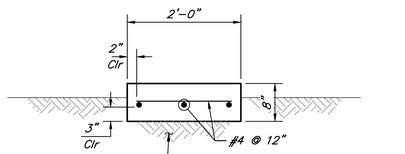

PIPE SUPPORT PAD
SCALE: 3/4" = 1'-0"

NO.	DATE	REVISIONS	APP.

WILBARGER CREEK M.U.D. No. 2
TRAVIS COUNTY, TEXAS

WASTEWATER TREATMENT PLANT
EXPANSION TO 1.5 MGD

PUMP PAD
PLAN & SECTION

QUIDDITY
Texas Board of Professional Engineers and Land Surveyors Reg. No. F-23290
912 South Capital of Texas Hwy, Suite 300 • Austin, TX 78746 • 512.441.9493

SCALE:	AS SHOWN	DGN. BY:	JROBINSON
DATE:	JULY 2026	DWN. BY:	ASALGADO
JOB NO.	0A651-0021-02	DWG. NO.	
SUBMITTED:		SURV. BY:	
		F.B. NO.	

STATE OF TEXAS
AHMAD DANESHVAR
132679
LICENSED PROFESSIONAL ENGINEER

07/06/2026

4-S-2
SHEET NO. 130 OF 230

0 1 2 3 4 5 ORIGINAL SCALE IN INCHES FOR REDUCED PLANS

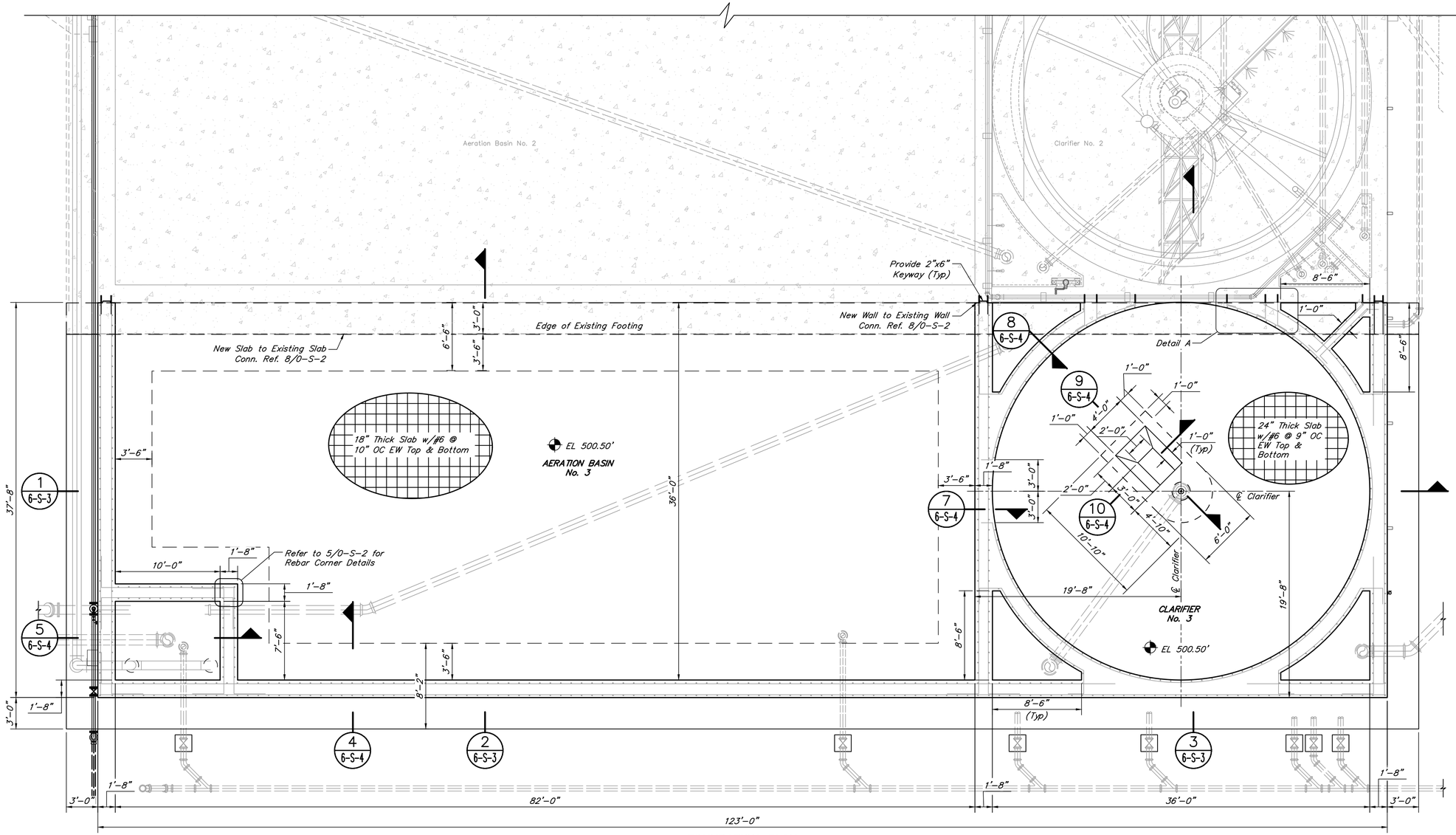

FOUNDATION PLAN
SCALE: 3/16" = 1'-0"

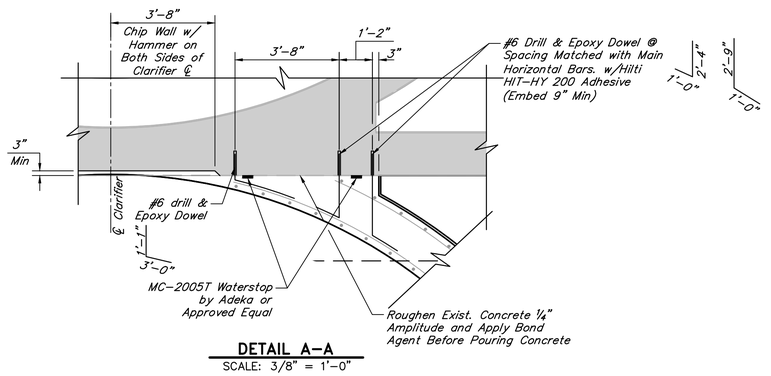

DETAIL A-A
SCALE: 3/8" = 1'-0"

NO.	DATE	REVISIONS	APP.

WILBARGER CREEK M.U.D. No. 2
TRAVIS COUNTY, TEXAS

WASTEWATER TREATMENT PLANT EXPANSION TO 1.5 MGD

AERATION BASIN No. 3 & CLARIFIER FOUNDATION PLAN

QUIDDITY
Texas Board of Professional Engineers and Land Surveyors Reg. No. F-23290
912 South Capital of Texas Hwy, Suite 300 • Austin, TX 78746 • 512.441.9493

SCALE:	AS SHOWN	DGN. BY:	RMERHI
DATE:	JULY 2026	DWN. BY:	ASALGADO
JOB NO.	0A651-0021-02	DWG. NO.	
SUBMITTED:		SURV. BY:	
		F.B. NO.	

STATE OF TEXAS
AHMAD DANESHVAR
132679
LICENSED PROFESSIONAL ENGINEER
07/06/2026

6-S-1
SHEET NO. 131 OF 230

C:\Users\asalgado\DC\ACCDocs\Quiddity - Water-\0A651-0021-02 _ WILBARGER WWTP EXP. 1.5 MGD\Project Files\PLANS\STRUCTURAL\STRUC A06-CLARIFIER_WAS_AND SCUM.dwg, Jul 06, 2026 - 5:03pm, asalgado

0 1 2 3 4 5 ORIGINAL SCALE IN INCHES FOR REDUCED PLANS

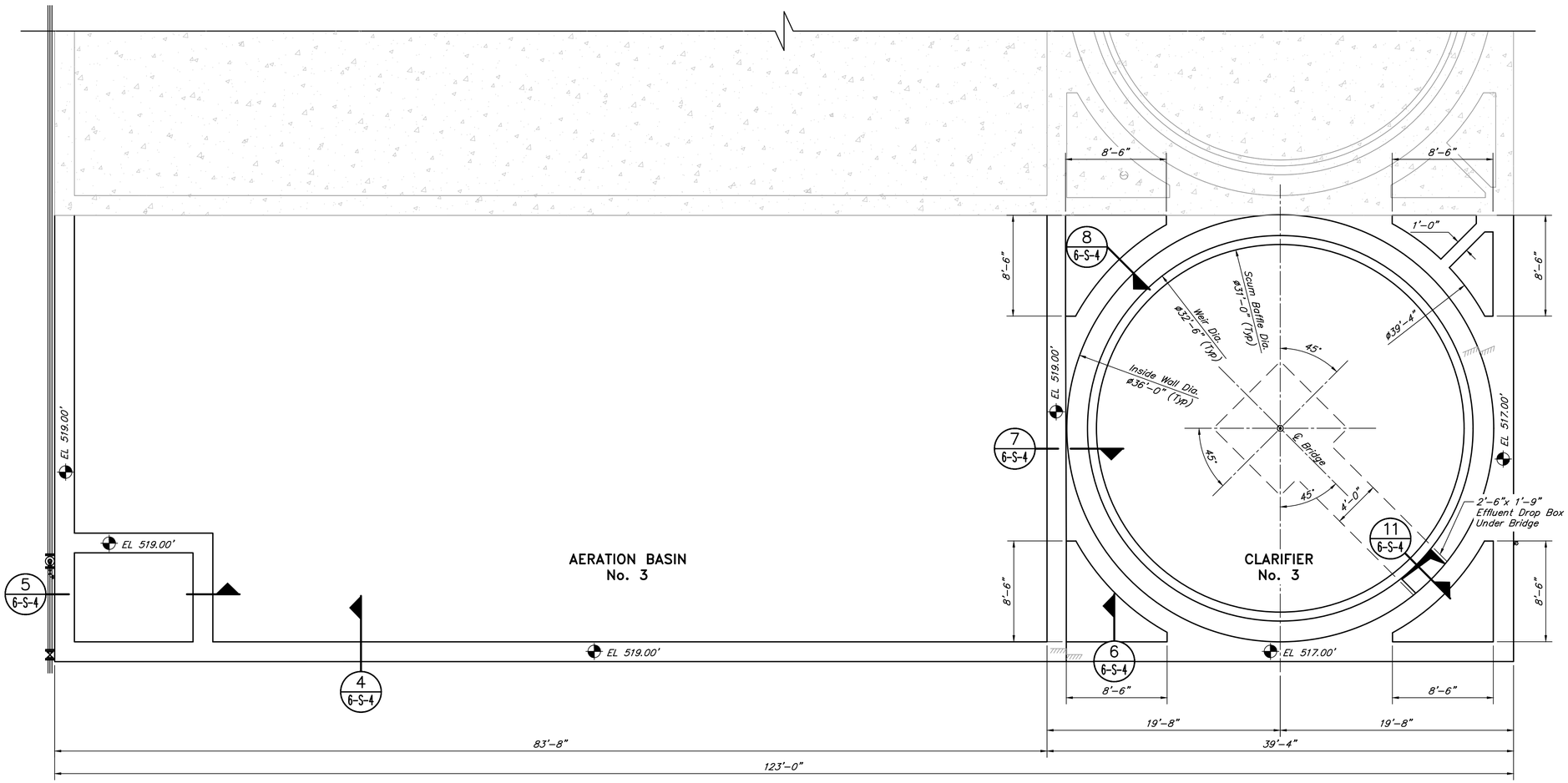

TOP VIEW PLAN
SCALE: 3/16" = 1'-0"

NO.	DATE	REVISIONS	APP.

WILBARGER CREEK M.U.D. No. 2
TRAVIS COUNTY, TEXAS

WASTEWATER TREATMENT PLANT
EXPANSION TO 1.5 MGD

AERATION BASIN No. 3 & CLARIFIER TOP VIEW PLAN

QUIDDITY
Texas Board of Professional Engineers and Land Surveyors Reg. No. F-23290
912 South Capital of Texas Hwy, Suite 300 • Austin, TX 78746 • 512.441.9493

SCALE:	AS SHOWN	DGN. BY:	RMERHI
DATE:	JULY 2026	DWN. BY:	ASALGADO
JOB NO.	0A651-0021-02	DWG. NO.	
SUBMITTED:		SURV. BY:	
		F.B. NO.	

STATE OF TEXAS
AHMAD DANESHVAR
132679
LICENSED PROFESSIONAL ENGINEER
07/06/2026

6-S-2
SHEET NO. 132 OF 230

C:\Users\asalgado\DC\ACCDocs\Quiddity - Water-\0A651-0021-02 _ WILBARGER WWTP EXP. 1.5 MGD\Project Files\PLANS\STRUCTURAL\STRUC A06-CLARIFIER_WAS_AND SCUM.dwg, Jul 06, 2026 - 5:03pm, asalgado

0 1 2 3 4 5 ORIGINAL SCALE IN INCHES FOR REDUCED PLANS

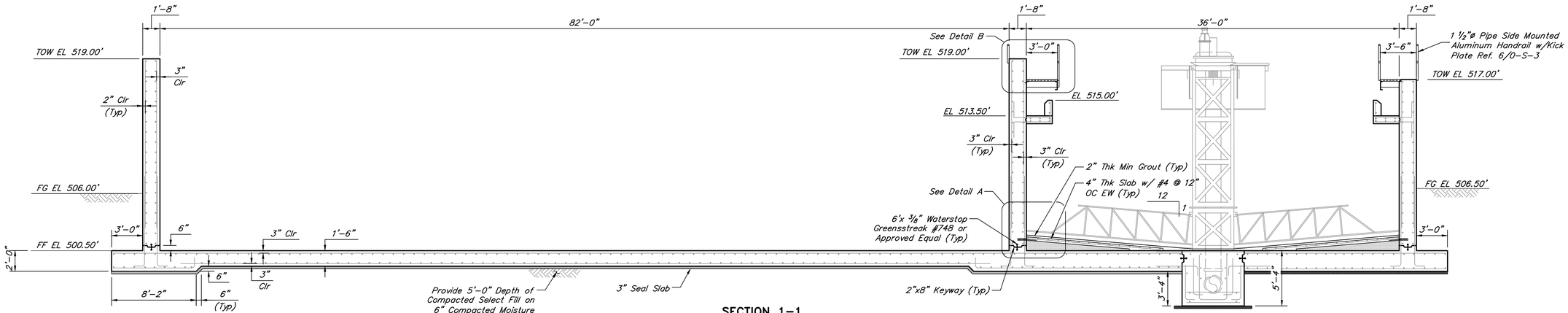

SECTION 1-1
SCALE: 3/16" = 1'-0"

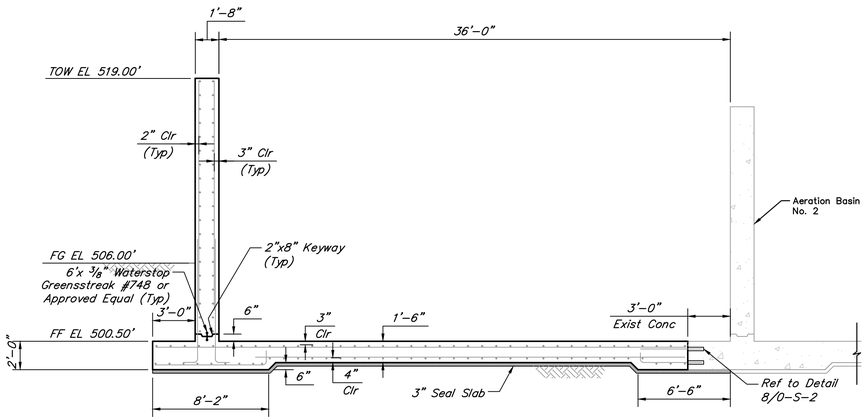

SECTION 2-2
SCALE: 3/16" = 1'-0"

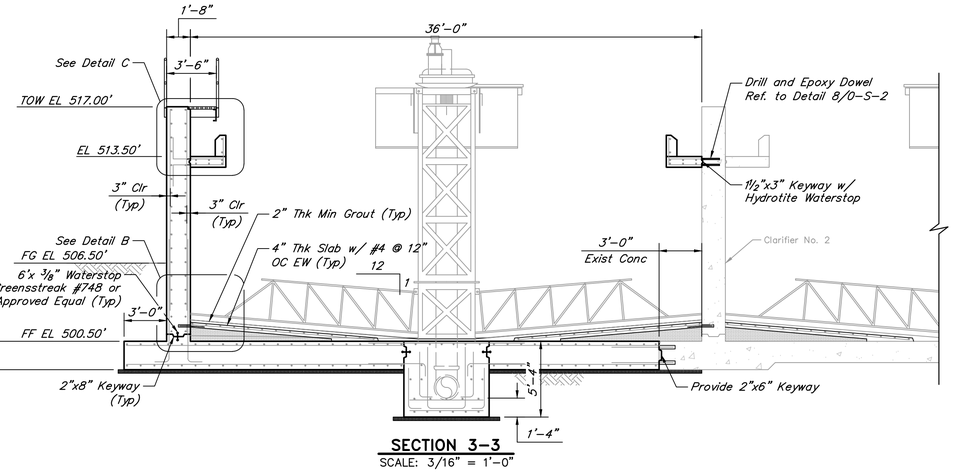

SECTION 3-3
SCALE: 3/16" = 1'-0"

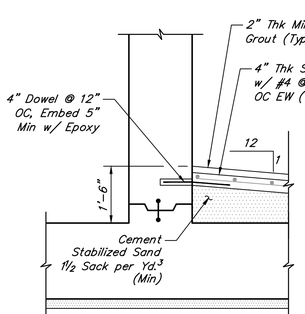

DETAIL A

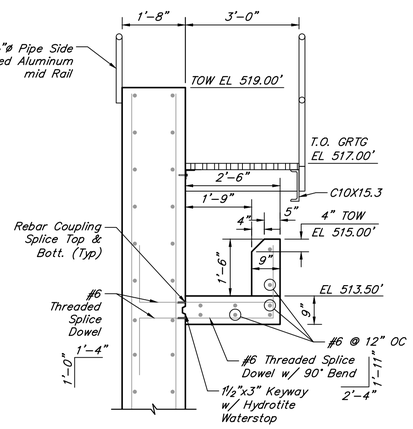

DETAIL B

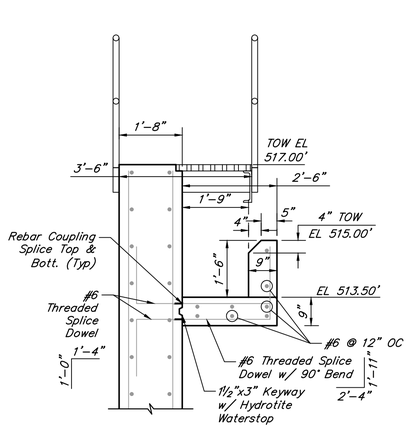

DETAIL C

NOTES:

1. Conduit requirements for each control panel may vary. See one-line diagram for number of conduits required.
2. Fabricate to meet enclosure and installation requirements for each panel location.
3. This installation is typical for all control panels located on plant walkways next to handrails.

NO.	DATE	REVISIONS	APP.

WILBARGER CREEK M.U.D. No. 2
TRAVIS COUNTY, TEXAS

WASTEWATER TREATMENT PLANT
EXPANSION TO 1.5 MGD

AERATION BASIN No. 3 & CLARIFIER FOUNDATION SECTIONS SHEET 1 OF 2

QUIDDITY
Texas Board of Professional Engineers and Land Surveyors Reg. No. F-23290
912 South Capital of Texas Hwy, Suite 300 • Austin, TX 78746 • 512.441.9493

SCALE:	AS SHOWN	DGN. BY:	RMERHI
DATE:	JULY 2026	DWN. BY:	ASALGADO
JOB NO.	0A651-0021-02	DWG. NO.	
SUBMITTED:		SURV. BY:	
		F.B. NO.	

STATE OF TEXAS
AHMAD DANESHVAR
132679
LICENSED PROFESSIONAL ENGINEER
07/06/2026

6-S-3
SHEET NO. 133 OF 230

C:\Users\asalgado\DC\ACCDocs\Quiddity - Water-\0A651-0021-02 _ WILBARGER WWTP EXP. 1.5 MGD\Project Files\PLANS\STRUCTURAL\STRUC A06-CLARIFIER_WAS_AND SCUM.dwg, Jul 06, 2026 - 5:04pm, asalgado

0 1 2 3 4 5 ORIGINAL SCALE IN INCHES FOR REDUCED PLANS

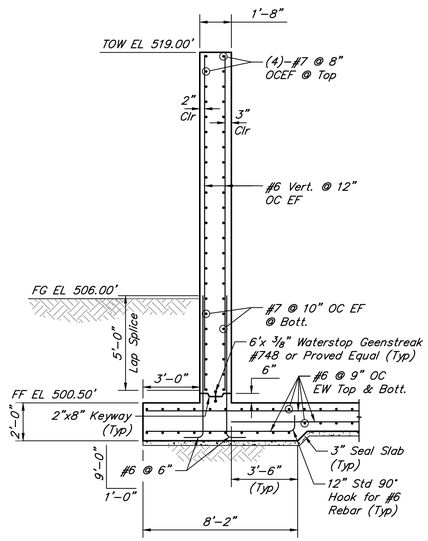

SECTION 4-4
SCALE: 1/4" = 1'-0"

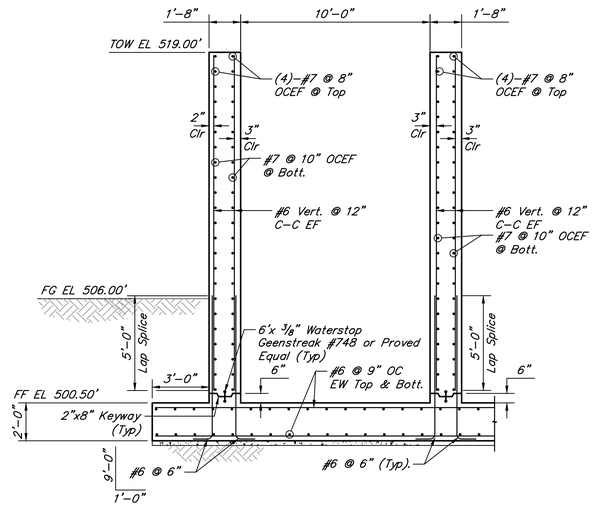

SECTION 5-5
SCALE: 1/4" = 1'-0"

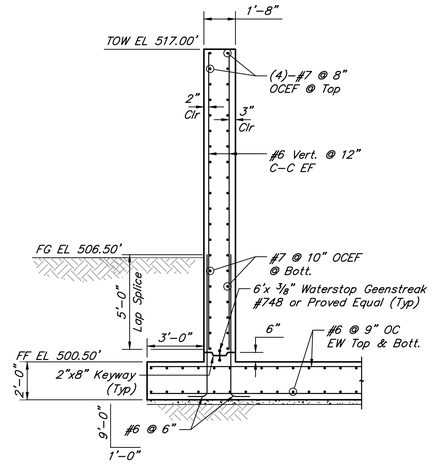

SECTION 6-6
SCALE: 1/4" = 1'-0"

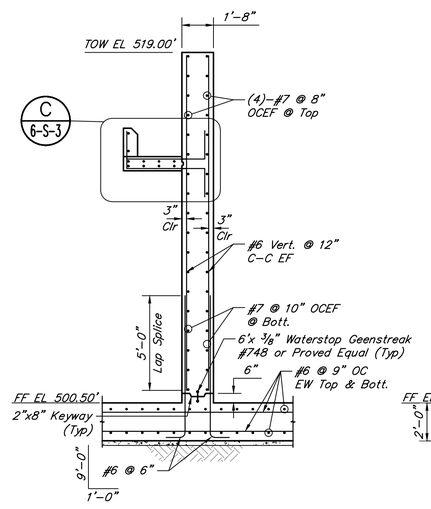

SECTION 7-7
SCALE: 1/4" = 1'-0"

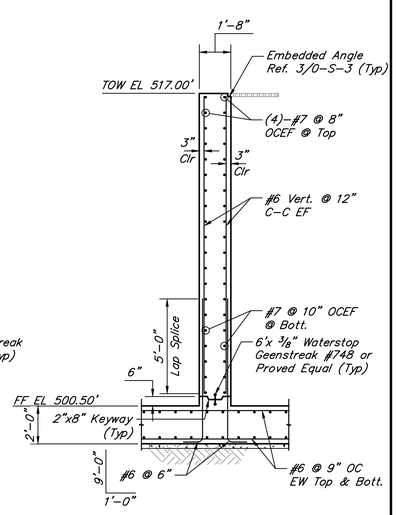

SECTION 8-8
SCALE: 1/4" = 1'-0"

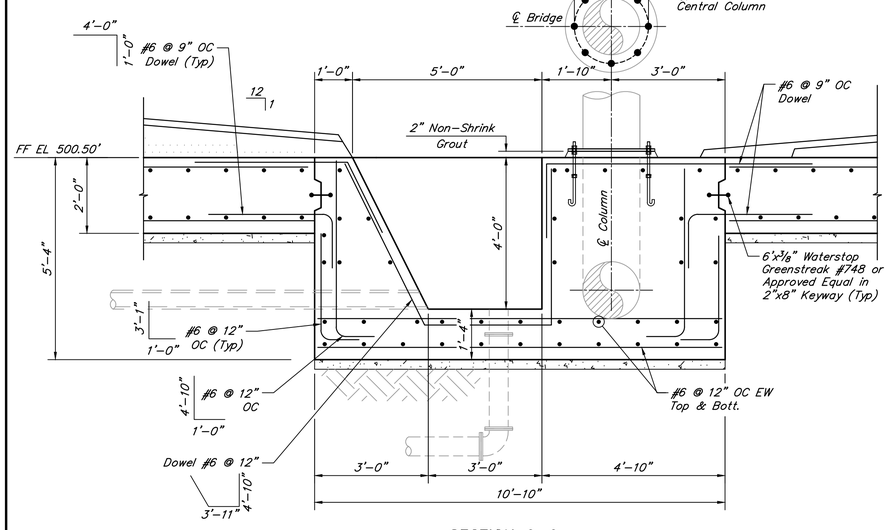

SECTION 9-9
SCALE: 1/2" = 1'-0"
(SLUDGE HOPPER REBARS ARE ALIGNED W/ EDGE OF HOPPER SLAB @ BOTTOM)

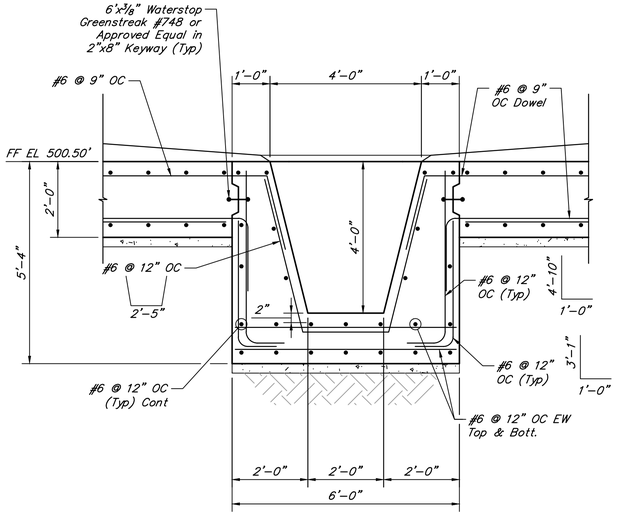

SECTION 10-10
SCALE: 1/2" = 1'-0"
(SLUDGE HOPPER REBARS ARE ALIGNED W/ EDGE OF HOPPER SLAB @ BOTTOM)

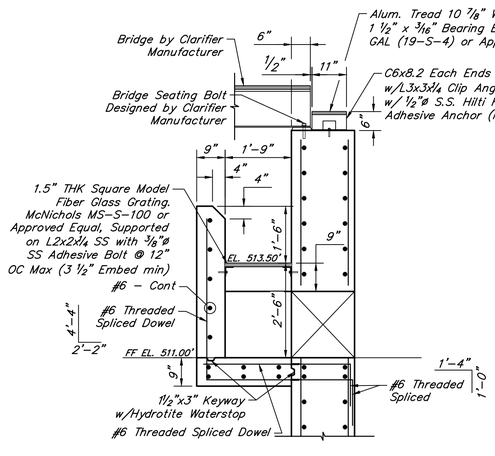

SECTION 11-11
SCALE: 1/2" = 1'-0"

NO.	DATE	REVISIONS	APP.

WILBARGER CREEK M.U.D. No. 2
TRAVIS COUNTY, TEXAS

WASTEWATER TREATMENT PLANT EXPANSION TO 1.5 MGD

AERATION BASIN No. 3 & CLARIFIER FOUNDATION SECTIONS SHEET 2 OF 2

QUIDDITY
Texas Board of Professional Engineers and Land Surveyors Reg. No. F-23290
912 South Capital of Texas Hwy, Suite 300 • Austin, TX 78746 • 512.441.9493

SCALE:	AS SHOWN	DGN. BY:	RMERHI
DATE:	JULY 2026	DWN. BY:	ASALGADO
JOB NO.	0A651-0021-02	DWG. NO.	
SUBMITTED:		SURV. BY:	
		F.B. NO.	

STATE OF TEXAS
AHMAD DANESHVAR
132879
LICENSED PROFESSIONAL ENGINEER
07/06/2026

6-S-4
SHEET NO. 134 OF 230

C:\Users\asalgado\DC\ACCDocs\Quiddity - Water-\0A651-0021-02 _ WILBARGER WWTP EXP. 1.5 MGD\Project Files\PLANS\STRUCTURAL\STRUC A06-CLARIFIER_WAS_AND SCUM.dwg, Jul 06, 2026 - 5:05pm, asalgado

0 1 2 3 4 5 ORIGINAL SCALE IN INCHES FOR REDUCED PLANS

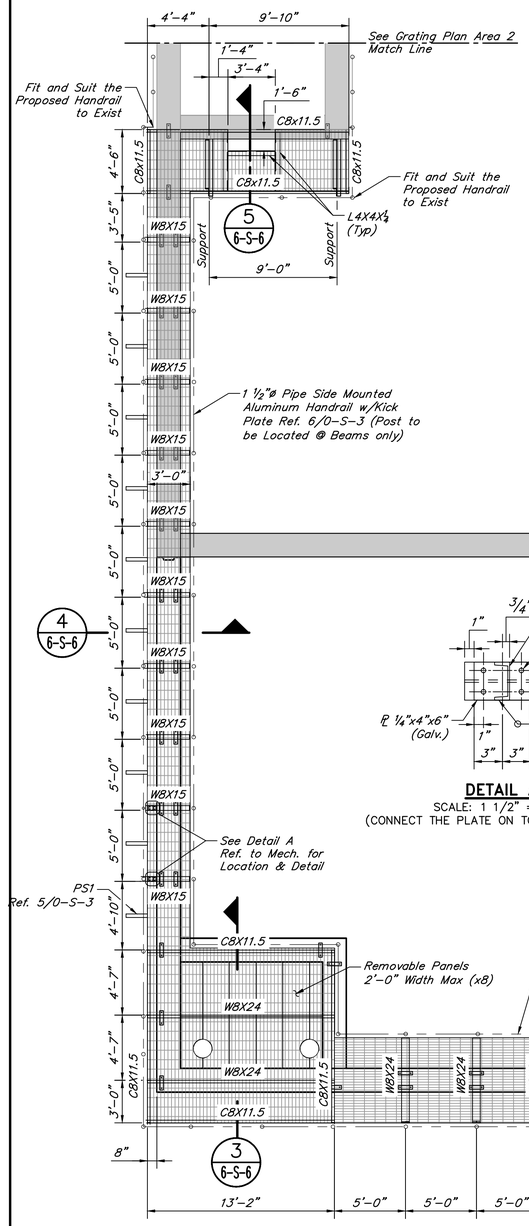

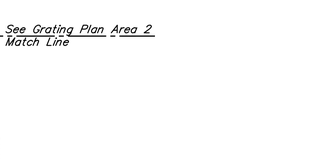

DETAIL A
SCALE: 1 1/2" = 1'-0"
(CONNECT THE PLATE ON TOP OF THE BEAMS)

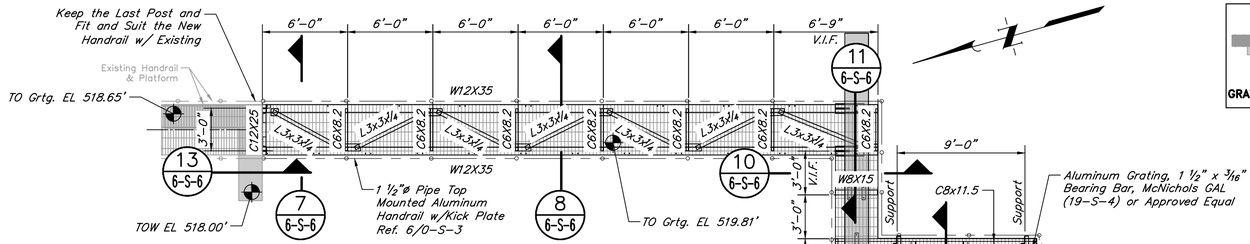

GRATING PLAN AREA 2
SCALE: 3/16" = 1'-0"
All horizontal connecting beams are C6x8.2
All diagonal are L3x3x¼
All structural steel to be hot dip galv. (UNO)

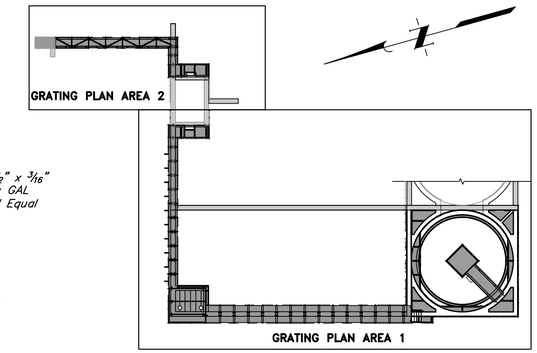

KEY PLAN
SCALE: 1/32" = 1'-0"

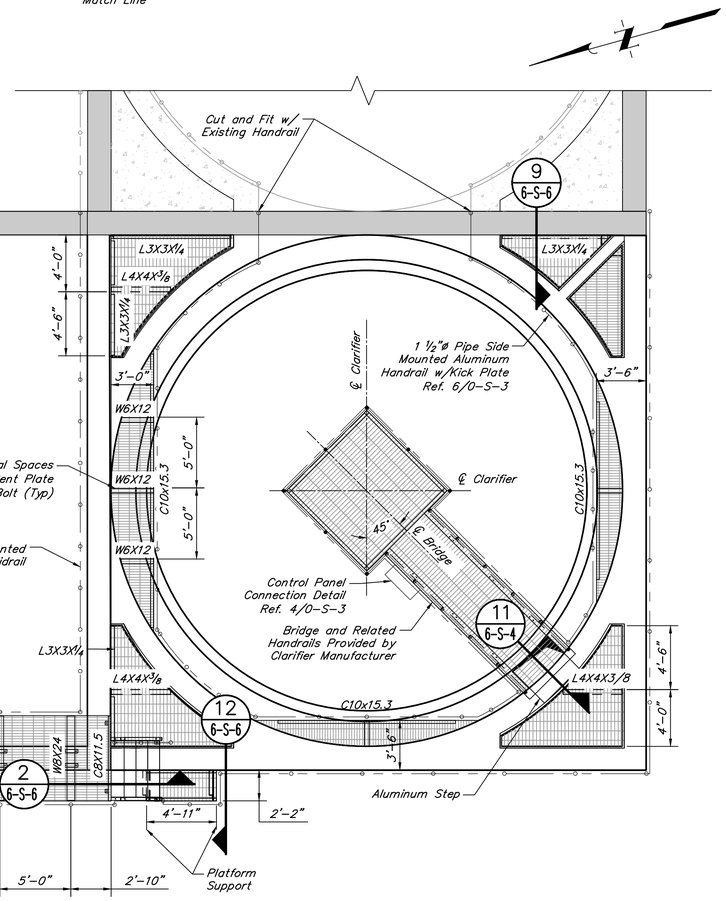

GRATING PLAN AREA 1
SCALE: 3/16" = 1'-0"
ALL STRUCTURAL STEEL TO BE HOT DIP GALV. (UNO)

NOTE:
VERIFY ELEVATIONS IN FIELD TO MATCH EXISTING STRUCTURES.

NO.	DATE	REVISIONS	APP.

WILBARGER CREEK M.U.D. No. 2
TRAVIS COUNTY, TEXAS

WASTEWATER TREATMENT PLANT EXPANSION TO 1.5 MGD

AERATION BASIN No. 3 & CLARIFIER GRATING PLAN & CONNECTING BRIDGE PLAN

QUIDDITY
Texas Board of Professional Engineers and Land Surveyors Reg. No. F-23290
912 South Capital of Texas Hwy, Suite 300 • Austin, TX 78746 • 512.441.9493

SCALE:	AS SHOWN	DGN. BY:	RMERHI
DATE:	JULY 2026	DWN. BY:	SFUENTES
JOB NO.	0A651-0021-02	DWG. NO.	
SUBMITTED:		SURV. BY:	
		F.B. NO.	

STATE OF TEXAS
AHMAD DANESHVAR
132879
LICENSED PROFESSIONAL ENGINEER
07/06/2026

6-S-5
SHEET NO. 135 OF 230

C:\Users\asalgado\DC\ACCDocs\Quiddity - Water-\0A651-0021-02 _ WILBARGER WWTP EXP. 1.5 MGD\Project Files\PLANS\STRUCTURAL\STRUC A06-CLARIFIER_WAS_AND SCUM.dwg, Jul 06, 2026 - 5:05pm, asalgado

0 1 2 3 4 5 ORIGINAL SCALE IN INCHES FOR REDUCED PLANS

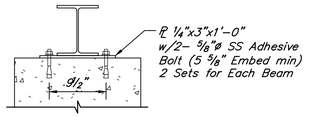

DETAIL A-A

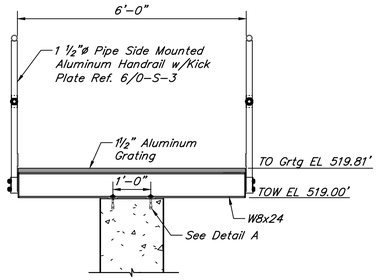

SECTION 1-1
SCALE: 1/2" = 1'-0"

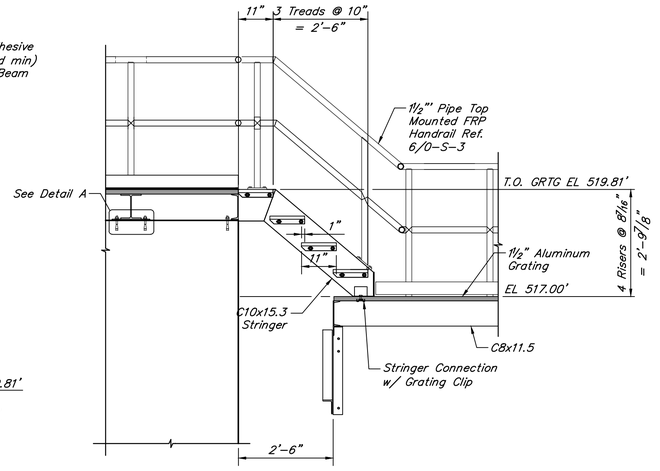

SECTION 2-2
SCALE: 1/2" = 1'-0"

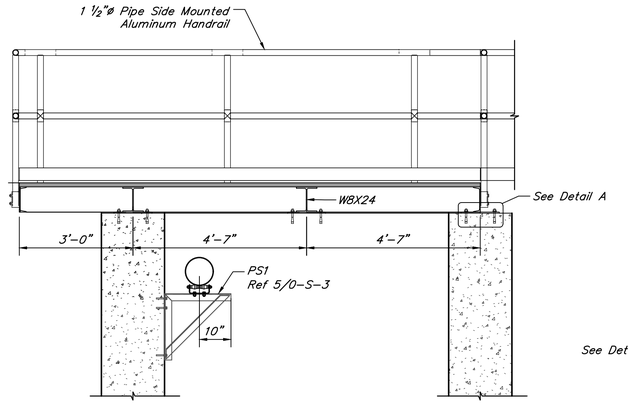

SECTION 3-3
SCALE: 1/2" = 1'-0"

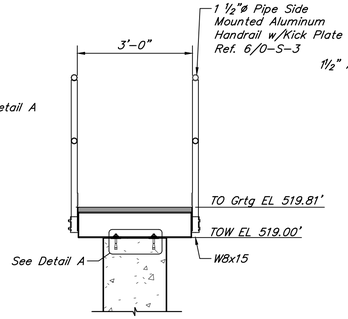

SECTION 4-4
SCALE: 1/4" = 1'-0"

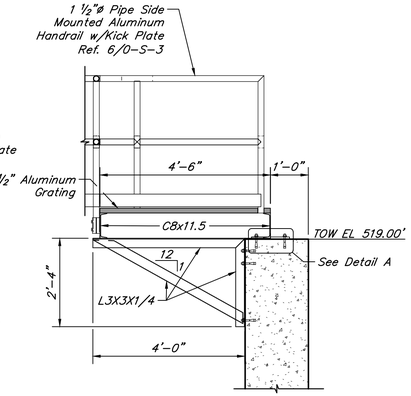

SECTION 5-5
SCALE: 1/2" = 1'-0"

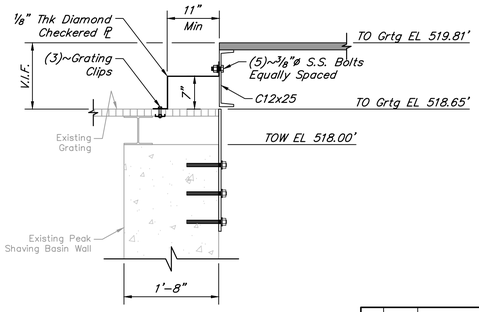

SECTION 13-13
SCALE: 1" = 1'-0"

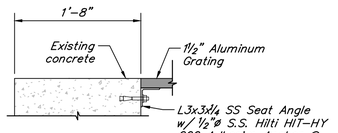

SECTION 9-9
SCALE: 1" = 1'-0"

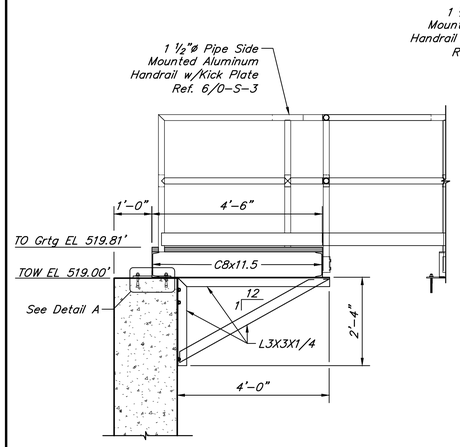

SECTION 6-6
SCALE: 1/2" = 1'-0"

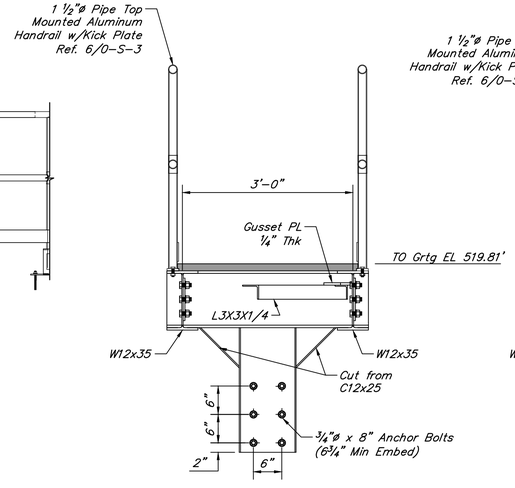

SECTION 7-7
SCALE: 3/4" = 1'-0"

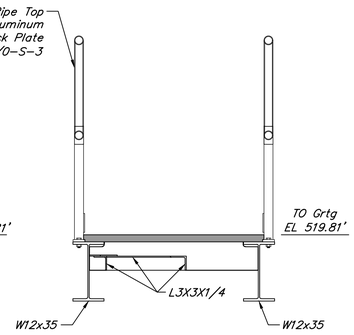

SECTION 8-8
SCALE: 3/4" = 1'-0"

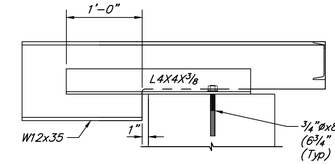

SECTION 10-10
SCALE: 1" = 1'-0"

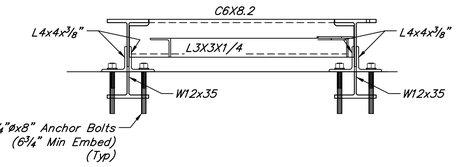

SECTION 11-11
SCALE: 1" = 1'-0"

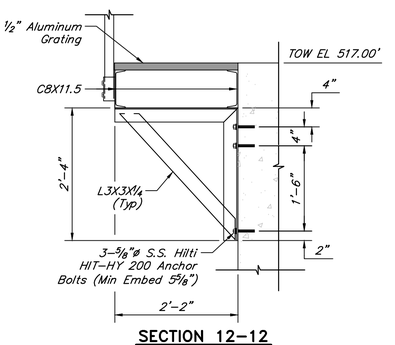

SECTION 12-12
SCALE: 3/4" = 1'-0"

NO.	DATE	REVISIONS	APP.

WILBARGER CREEK M.U.D. No. 2
TRAVIS COUNTY, TEXAS

WASTEWATER TREATMENT PLANT EXPANSION TO 1.5 MGD

AERATION BASIN No. 3 & CLARIFIER STEEL SECTIONS

QUIDDITY
Texas Board of Professional Engineers and Land Surveyors Reg. No. F-23290
912 South Capital of Texas Hwy, Suite 300 • Austin, TX 78746 • 512.441.9493

SCALE:	AS SHOWN	DGN. BY:	JROBINSON
DATE:	JULY 2026	DWN. BY:	SFUENTES
JOB NO.	0A651-0021-02	DWG. NO.	
SUBMITTED:		SURV. BY:	
		F.B. NO.	

STATE OF TEXAS
AHMAD DANESHVAR
132679
LICENSED PROFESSIONAL ENGINEER
07/06/2026

6-S-6
SHEET NO. 136 OF 230

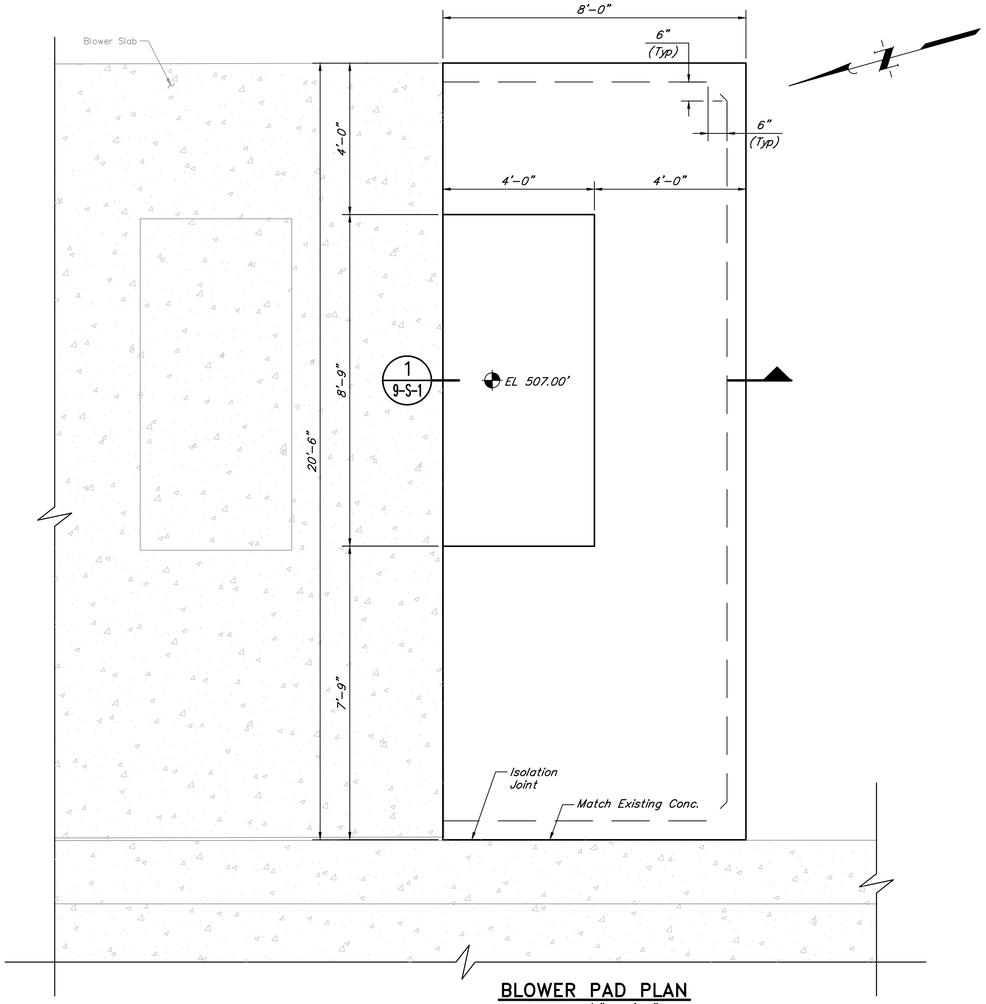

BLOWER PAD PLAN
SCALE: 1/2" = 1'-0"

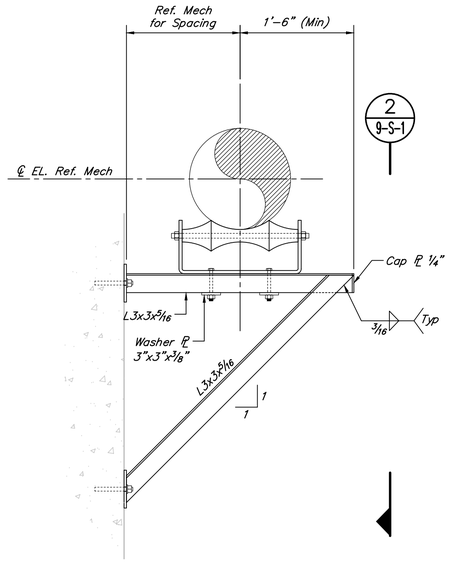

KNEE BRACE ROLLER PIPE SUPPORT WITH SEPARATE PLATES
SCALE: 1" = 1'-0"

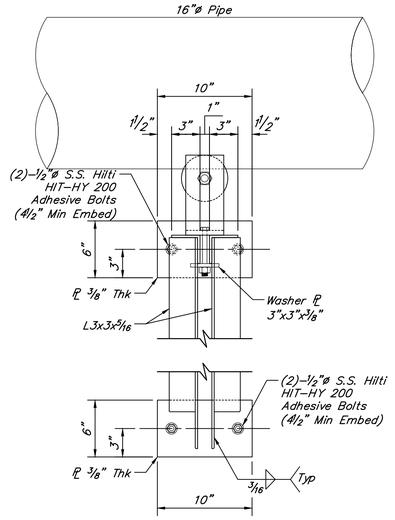

SECTION 2-2
SCALE: 1 1/2" = 1'-0"

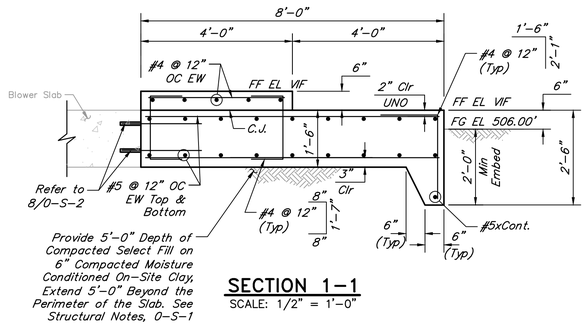

SECTION 1-1
SCALE: 1/2" = 1'-0"

NO.	DATE	REVISIONS	APP.

WILBARGER CREEK M.U.D. No. 2
TRAVIS COUNTY, TEXAS

WASTEWATER TREATMENT PLANT EXPANSION TO 1.5 MGD

BLOWER PAD FOUNDATION PLAN AND SECTION

QUIDDITY
Texas Board of Professional Engineers and Land Surveyors Reg. No. F-23290
912 South Capital of Texas Hwy, Suite 300 • Austin, TX 78746 • 512.441.9493

SCALE:	AS SHOWN	DGN. BY:	RMERHI
DATE:	JULY 2026	DWN. BY:	ASALGADO
JOB NO.	0A651-0021-02	DWG. NO.	
SUBMITTED:		SURV. BY:	
		F.B. NO.	

STATE OF TEXAS
AHMAD DANESHVAR
132679
LICENSED PROFESSIONAL ENGINEER
07/06/2026

9-S-1
SHEET NO. 137 OF 230

ORIGINAL SCALE IN INCHES FOR REDUCED PLANS

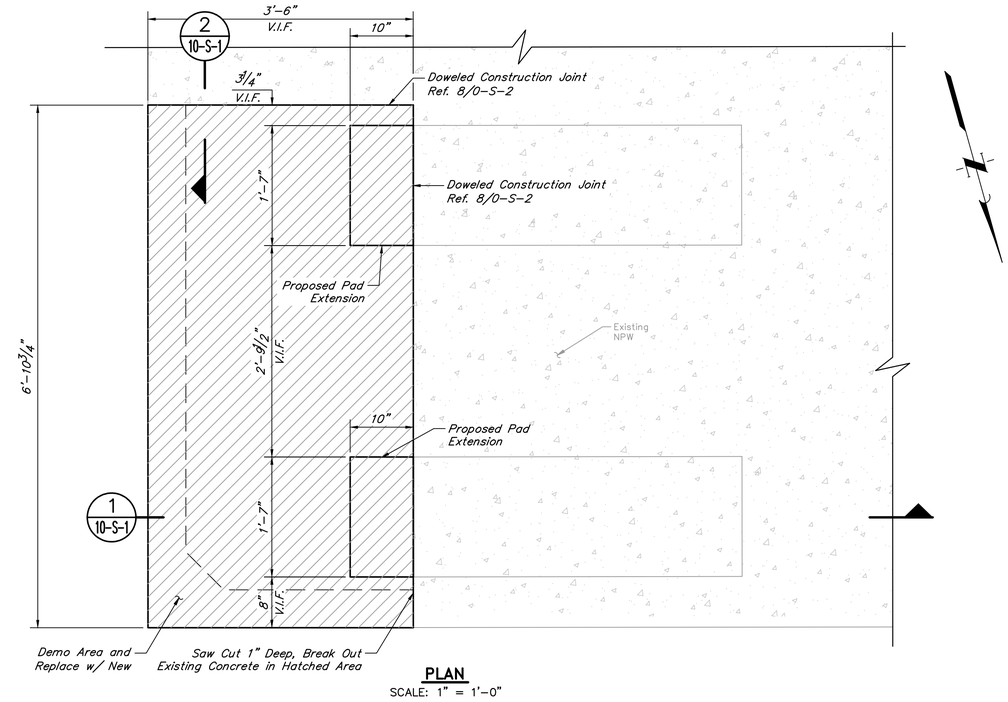

PLAN
SCALE: 1" = 1'-0"

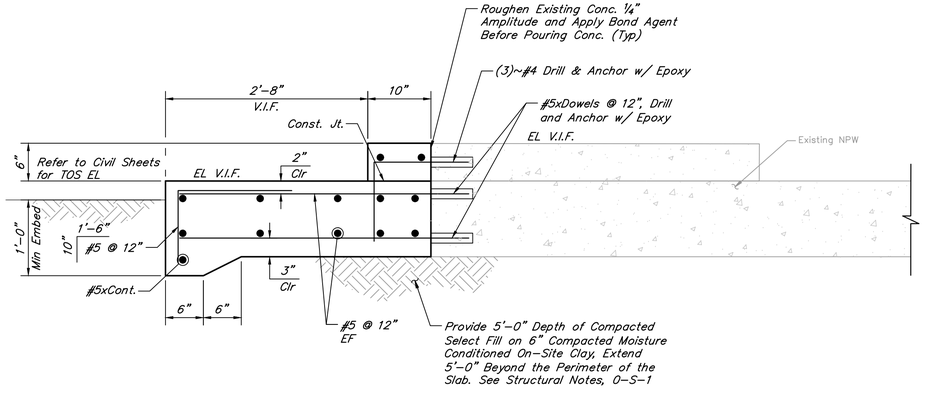

SECTION 1-1
SCALE: 1" = 1'-0"

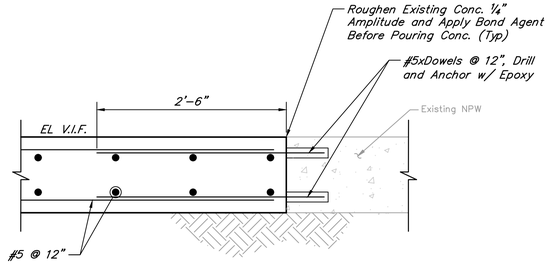

SECTION 2-2
SCALE: 1" = 1'-0"

NO.	DATE	REVISIONS	APP.

WILBARGER CREEK M.U.D. No. 2
TRAVIS COUNTY, TEXAS

WASTEWATER TREATMENT PLANT
EXPANSION TO 1.5 MGD

NPW SYSTEM IMPROVEMENTS PLAN & SECTION

QUIDDITY
Texas Board of Professional Engineers and Land Surveyors Reg. No. F-23290
912 South Capital of Texas Hwy, Suite 300 • Austin, TX 78746 • 512.441.9493

SCALE:	AS SHOWN	DGN. BY:	RMERHI
DATE:	JULY 2026	DWN. BY:	SFUENTES
JOB NO.	0A651-0021-02	DWG. NO.	
SUBMITTED:		SURV. BY:	
		F.B. NO.	

STATE OF TEXAS
AHMAD DANESHVAR
132678
LICENSED PROFESSIONAL ENGINEER
07/06/2026

10-S-1
SHEET NO. 138 OF 230

C:\Users\asalgado\DC\ACCDocs\Quiddity - Water-\0A651-0021-02 _ WILBARGER WWTP EXP. 1.5 MGD\Project Files\PLANS\STRUCTURAL\STRUC A10-NPW.dwg, Jul 01, 2026 - 1:17pm, asalgado

0 1 2 3 4 5 ORIGINAL SCALE IN INCHES FOR REDUCED PLANS

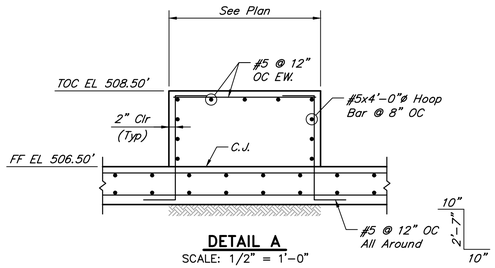

DETAIL A
SCALE: 1/2" = 1'-0"

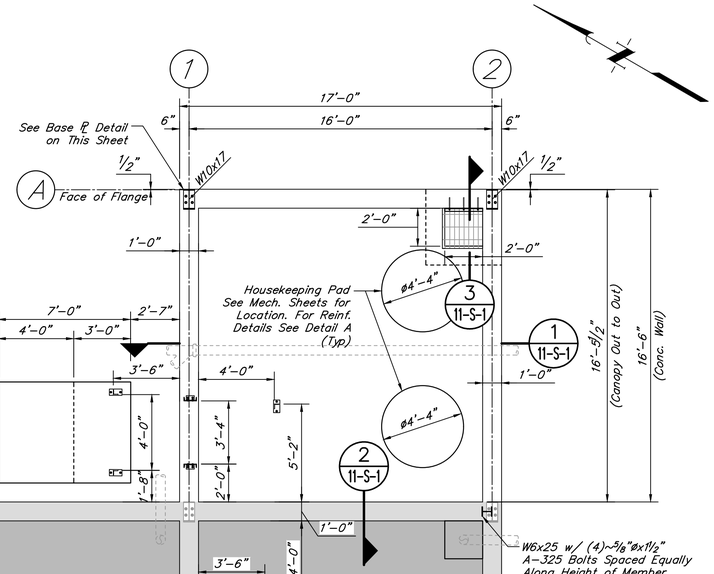

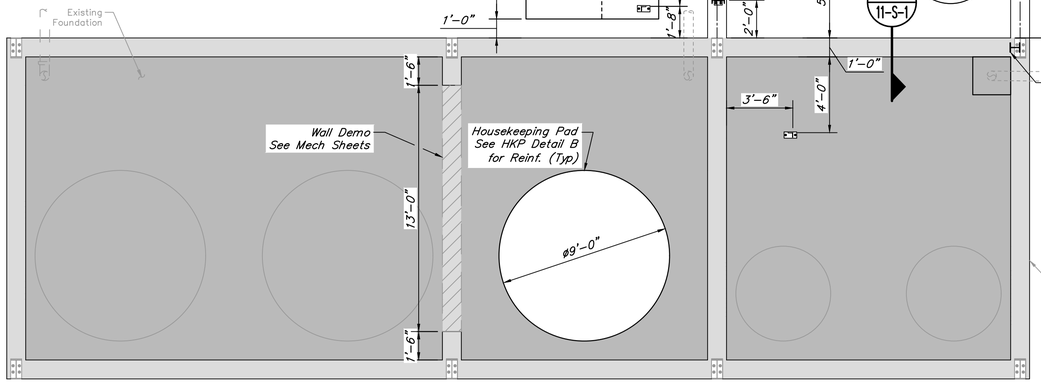

FOUNDATION PLAN
SCALE: 1/4" = 1'-0"

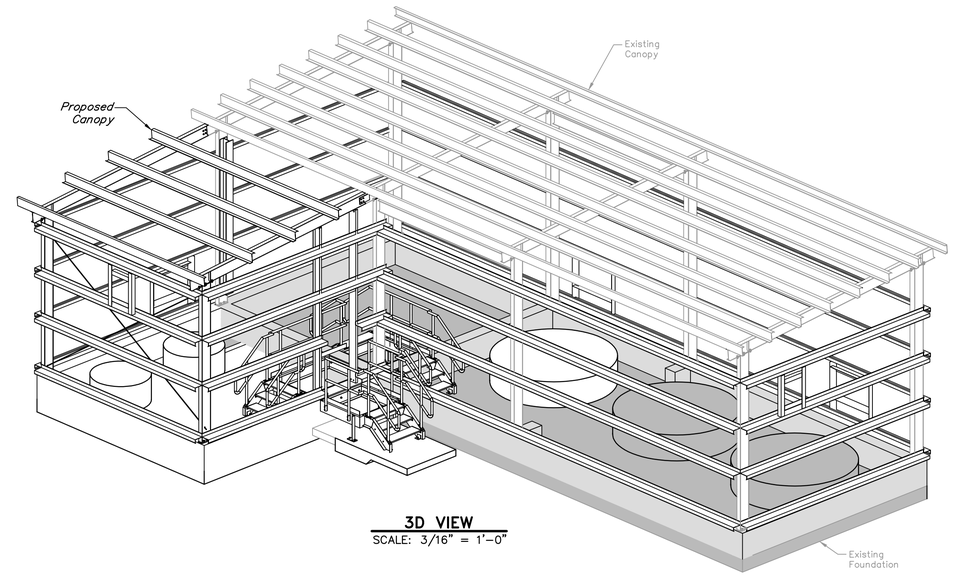

3D VIEW
SCALE: 3/16" = 1'-0"

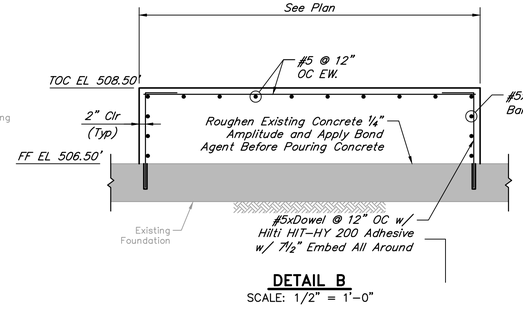

DETAIL B
SCALE: 1/2" = 1'-0"

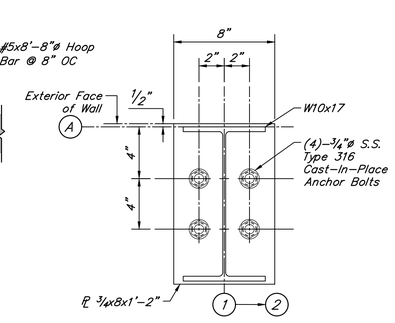

BASE PLATE DETAIL
SCALE: 2" = 1'-0"

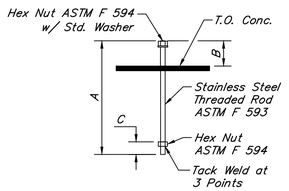

(TYP) ANCHOR RODS
NOT TO SCALE

ANC. ROD SCHEDULE TYP			
DIAMETER	A	B	C
3/4"	18"	4"	2"

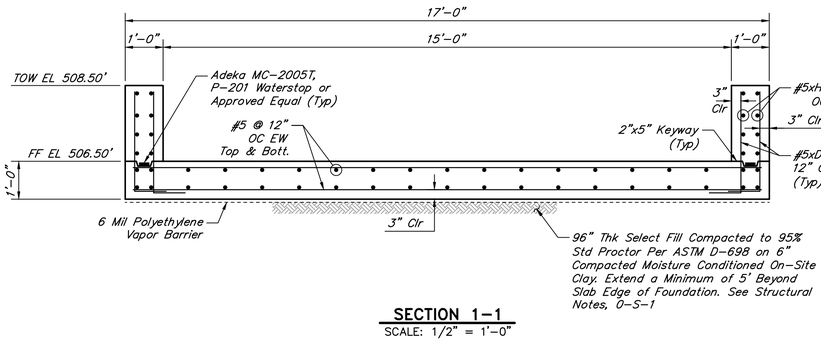

SECTION 1-1
SCALE: 1/2" = 1'-0"

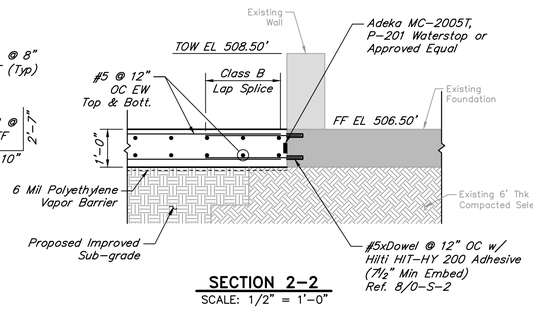

SECTION 2-2
SCALE: 1/2" = 1'-0"

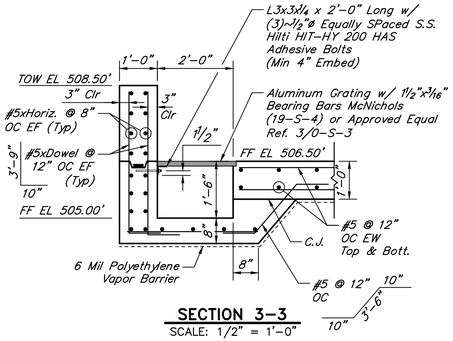

SECTION 3-3
SCALE: 1/2" = 1'-0"

NO.	DATE	REVISIONS	APP.

WILBARGER CREEK M.U.D. No. 2
TRAVIS COUNTY, TEXAS

WASTEWATER TREATMENT PLANT EXPANSION TO 1.5 MGD

CHEMICAL SYSTEMS FOUNDATION PLAN AND SECTIONS

QUIDDITY
Texas Board of Professional Engineers and Land Surveyors Reg. No. F-23290
912 South Capital of Texas Hwy, Suite 300 • Austin, TX 78746 • 512.441.9493

SCALE:	AS SHOWN	DGN. BY:	JTREVINO
DATE:	JULY 2026	DWN. BY:	ASALGADO
JOB NO.	0A651-0021-02	DWG. NO.	
SUBMITTED:		SURV. BY:	
		F.B. NO.	

STATE OF TEXAS
AHMAD DANESHVAR
132679
LICENSED PROFESSIONAL ENGINEER
07/06/2026

11-S-1
SHEET NO. 139 OF 230

C:\Users\asalgado\DC\ACCDocs\Quiddity - Water-\0A651-0021-02 _ WILBARGER WWTP EXP. 1.5 MGD\Project Files\PLANS\STRUCTURAL\STRUC A11-CHEMICAL SYSTEMS.dwg, Jul 06, 2026 - 2:30pm, asalgado

0 1 2 3 4 5 ORIGINAL SCALE IN INCHES FOR REDUCED PLANS

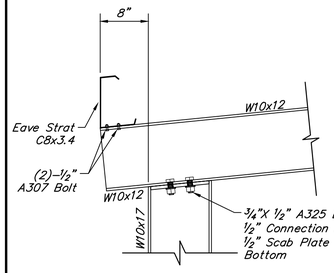

RAFTER TO COLUMN CONNECTION
SCALE: 1" = 1'-0"

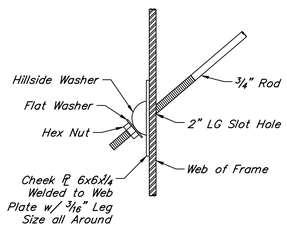

ROD BRACE TO FRAME DETAIL
SCALE: 2" = 1'-0"

Note:
Proposed Steel Members and Roof to be Painted and Color Matched w/ Existing Structure

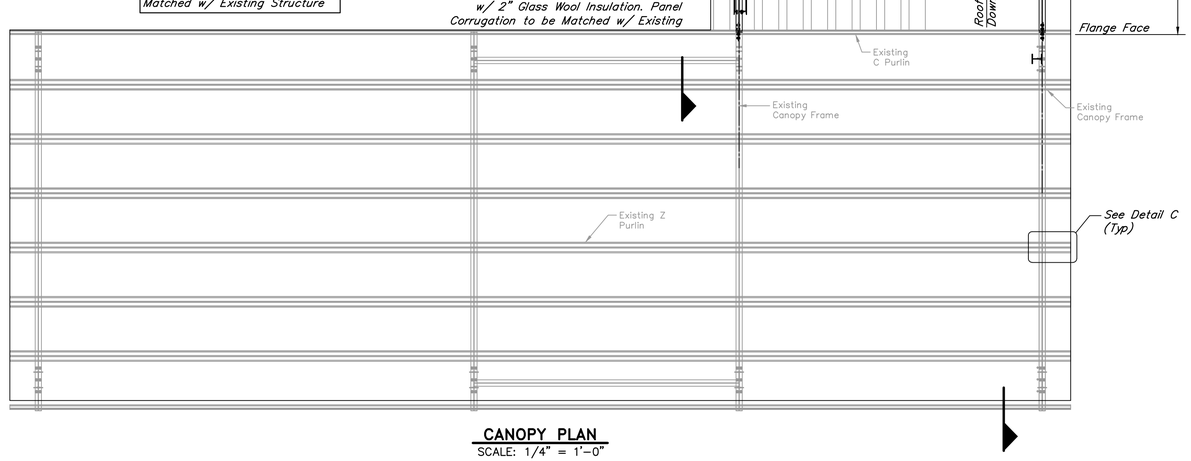

CANOPY PLAN
SCALE: 1/4" = 1'-0"

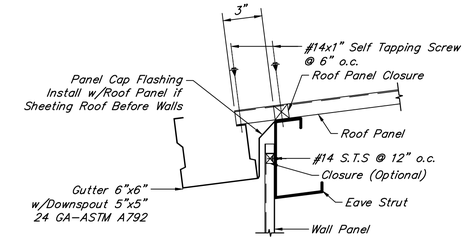

DETAIL A
WITH SHEETED SIDEWALL SIDEWALL EAVE SECTIONS
SCALE: 1 1/2" = 1'-0"

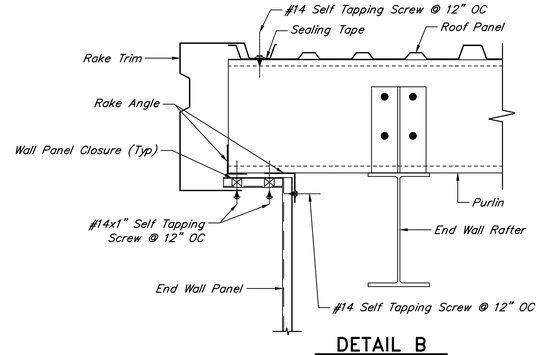

DETAIL B
WITH SHEETED END WALL SIDEWALL RAKE SECTIONS
SCALE: 1 1/2" = 1'-0"

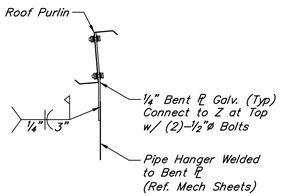

TYPICAL PIPE HANGER CONNECTION
SCALE: 1" = 1'-0"

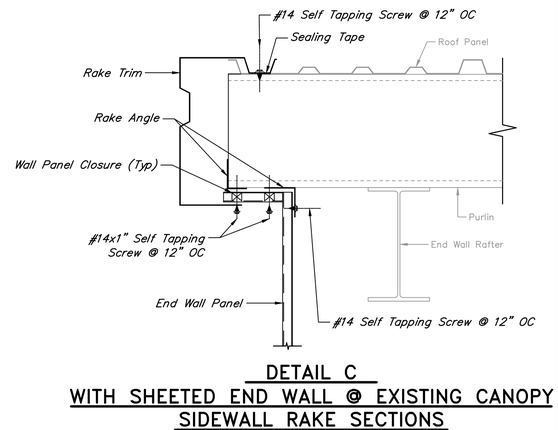

DETAIL C
WITH SHEETED END WALL @ EXISTING CANOPY SIDEWALL RAKE SECTIONS
SCALE: 1 1/2" = 1'-0"

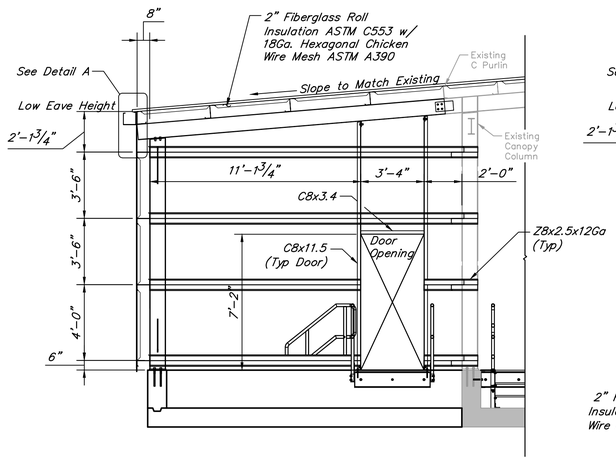

SECTION 1-1
SCALE: 1/4" = 1'-0"

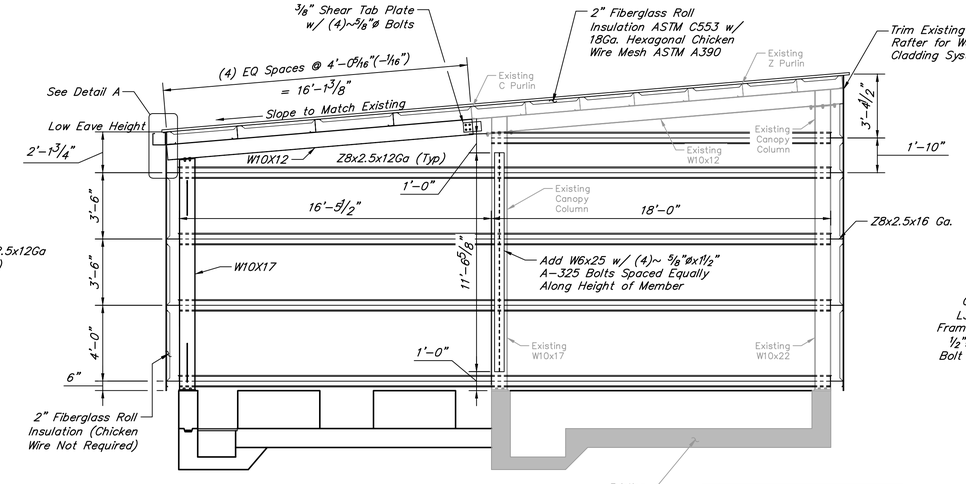

SECTION 2-2
SCALE: 1/4" = 1'-0"

Note:
Cold Formed Connections to be Designed by Steel Manufacturer for Minimum 1.2 kips (ASD) Shear at Both Ends

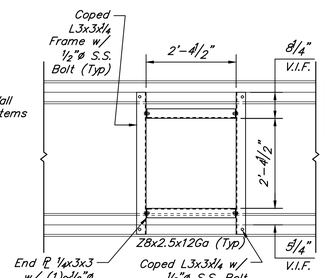

Note:
For Installed Fan Location See Mech. Sheets

FAN OPENING DETAIL
SCALE: 1/2" = 1'-0"

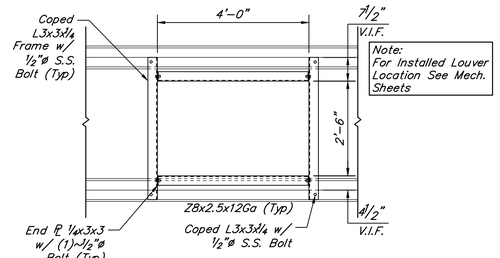

Note:
For Installed Louver Location See Mech. Sheets

LOUVER OPENING DETAIL
SCALE: 1/2" = 1'-0"

NO.	DATE	REVISIONS	APP.

WILBARGER CREEK M.U.D. No. 2
TRAVIS COUNTY, TEXAS

WASTEWATER TREATMENT PLANT EXPANSION TO 1.5 MGD

CHEMICAL SYSTEMS CANOPY PLAN AND SECTIONS

QUIDDITY
Texas Board of Professional Engineers and Land Surveyors Reg. No. F-23290
912 South Capital of Texas Hwy, Suite 300 • Austin, TX 78746 • 512.441.9493

SCALE:	AS SHOWN	DGN. BY:	JTREVINO
DATE:	JULY 2026	DWN. BY:	ASALGADO
JOB NO.	0A651-0021-02	DWG. NO.	
SUBMITTED:		SURV. BY:	
		F.B. NO.	

STATE OF TEXAS
AHMAD DANESHVAR
132679
LICENSED PROFESSIONAL ENGINEER
07/06/2026

11-S-2
SHEET NO. 140 OF 230

C:\Users\asalgado\DC\ACCDocs\Quiddity - Water-\0A651-0021-02 _ WILBARGER WWTP EXP. 1.5 MGD\Project Files\PLANS\STRUCTURAL\STRUC A11-CHEMICAL SYSTEMS.dwg, Jul 06, 2026 - 2:30pm, asalgado

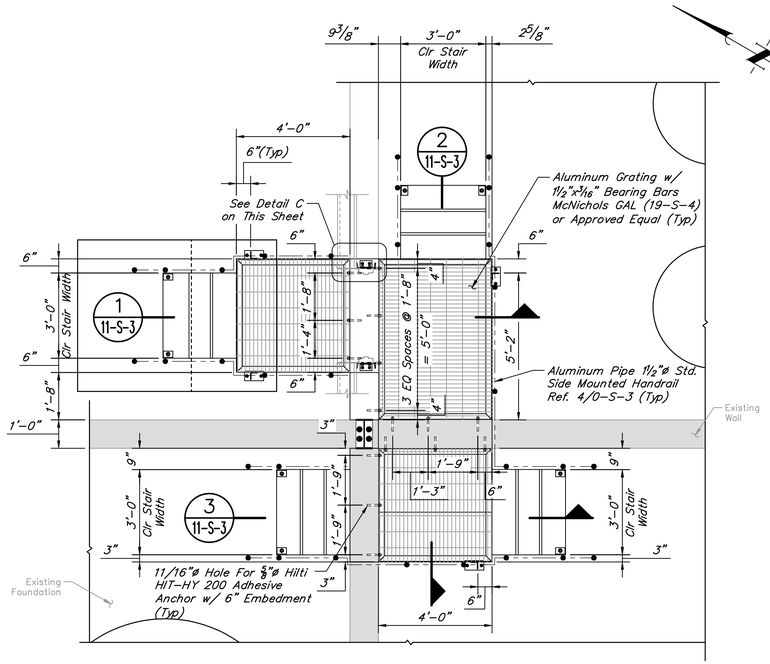

All Members to be C8x11.5 U.N.O.

GRATING PLAN
SCALE: 3/8" = 1'-0"

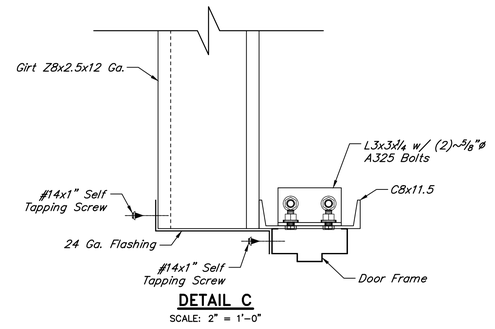

DETAIL C
SCALE: 2" = 1'-0"

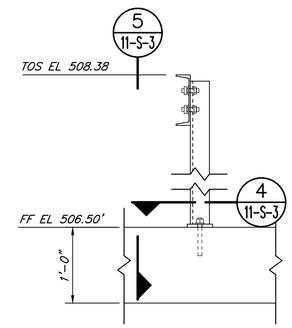

DETAIL A
SCALE: 1" = 1'-0"

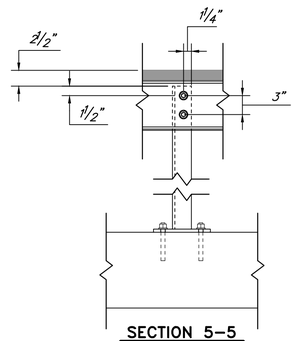

SECTION 5-5
SCALE: 1" = 1'-0"

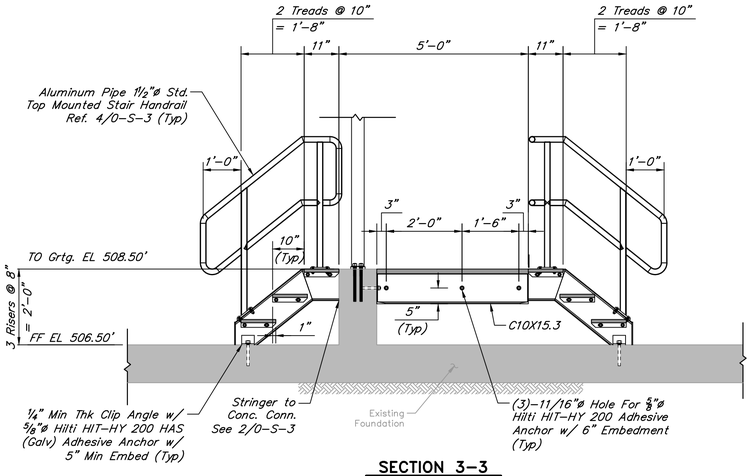

SECTION 3-3
SCALE: 1/2" = 1'-0"

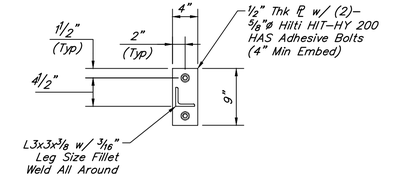

SECTION 4-4
SCALE: 1" = 1'-0"

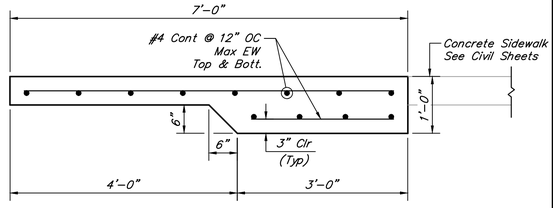

DETAIL B
SCALE: 3/4" = 1'-0"

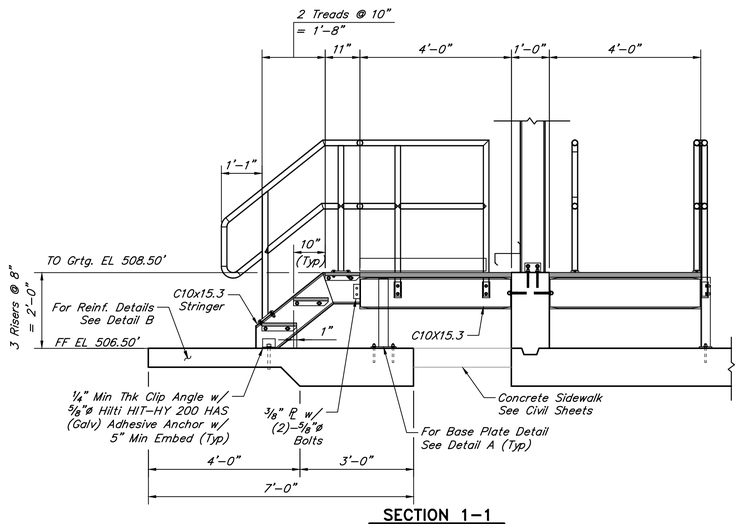

SECTION 1-1
SCALE: 1/2" = 1'-0"

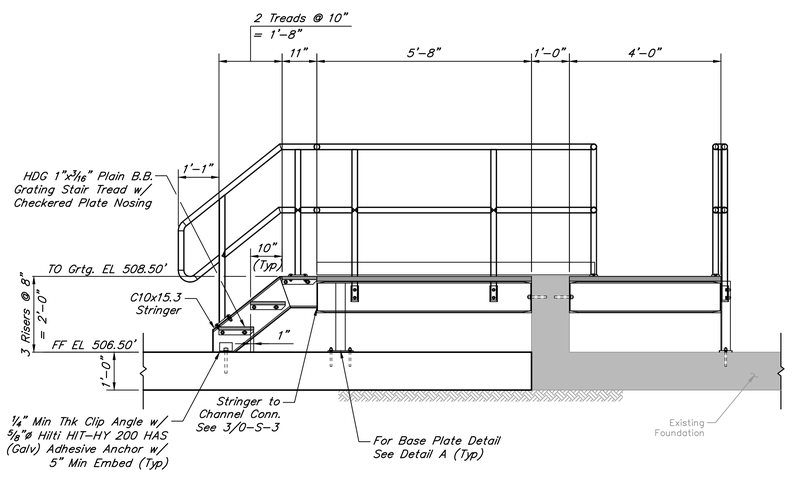

SECTION 2-2
SCALE: 1/2" = 1'-0"

NO.	DATE	REVISIONS	APP.

WILBARGER CREEK M.U.D. No. 2
TRAVIS COUNTY, TEXAS

WASTEWATER TREATMENT PLANT EXPANSION TO 1.5 MGD

CHEMICAL SYSTEMS GRATING PLAN AND SECTIONS

QUIDDITY
Texas Board of Professional Engineers and Land Surveyors Reg. No. F-23290
912 South Capital of Texas Hwy, Suite 300 • Austin, TX 78746 • 512.441.9493

SCALE:	AS SHOWN	DGN. BY:	JTREVINO
DATE:	JULY 2026	DWN. BY:	ASALGADO
JOB NO.	0A651-0021-02	DWG. NO.	
SUBMITTED:		SURV. BY:	
		F.B. NO.	

STATE OF TEXAS
AHMAD DANESHVAR
132678
LICENSED PROFESSIONAL ENGINEER
07/06/2026

11-S-3
SHEET NO. 141 OF 230

ORIGINAL SCALE IN INCHES FOR REDUCED PLANS

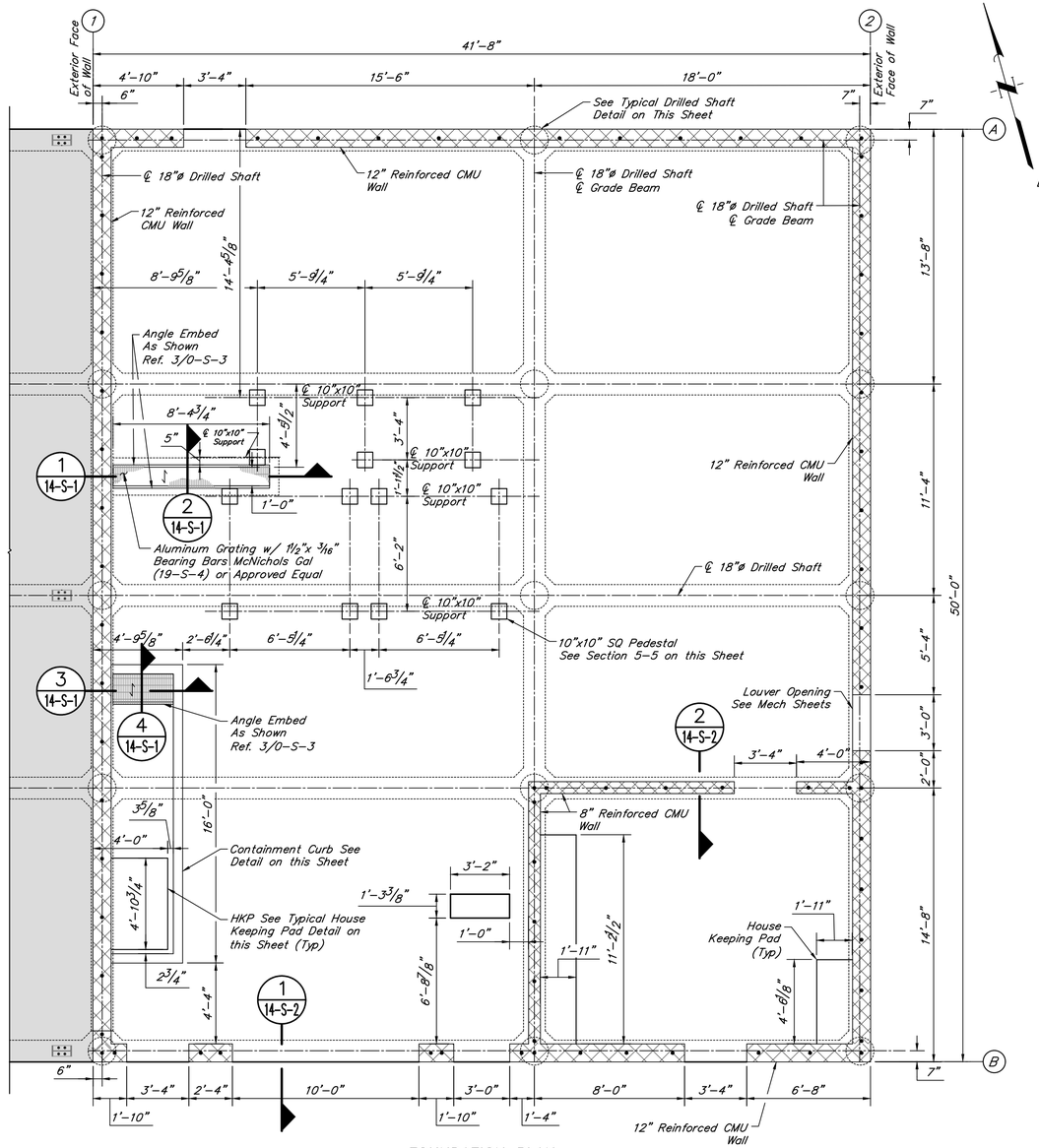

FOUNDATION PLAN
SCALE: 1/4" = 1'-0"
PLATFORM BASE PLATES NOT SHOWN FOR CLARITY

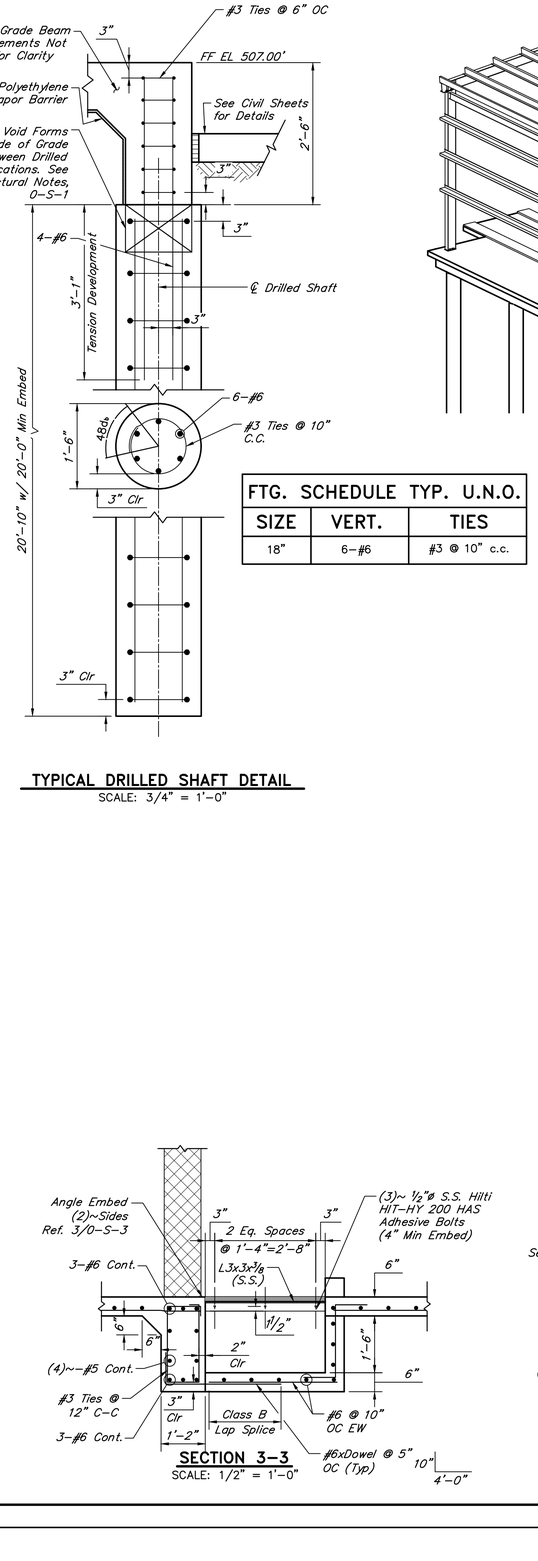

TYPICAL DRILLED SHAFT DETAIL
SCALE: 3/4" = 1'-0"

FTG. SCHEDULE TYP. U.N.O.		
SIZE	VERT.	TIES
18"	6-#6	#3 @ 10" c.c.

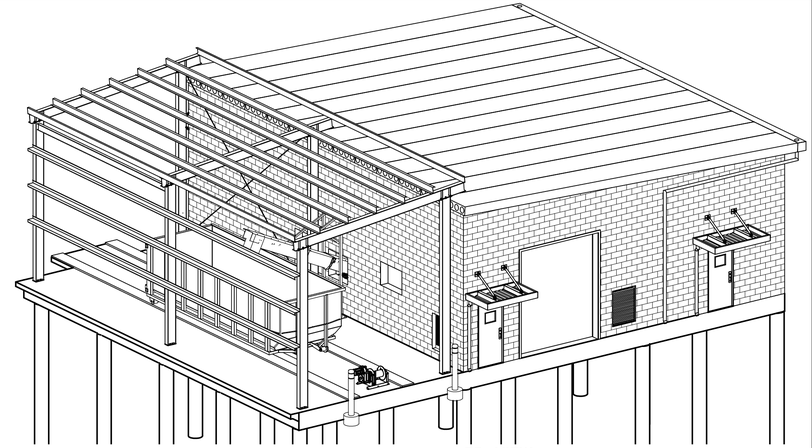

3D VIEW

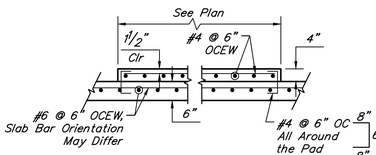

TYPICAL HOUSEKEEPING PAD DETAIL
SCALE: 1/2" = 1'-0"

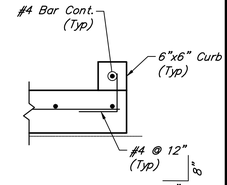

CURB DETAIL
SCALE: 3/4" = 1'-0"

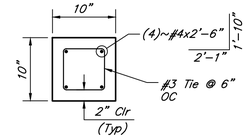

SECTION 6-6
SCALE: 1" = 1'-0"

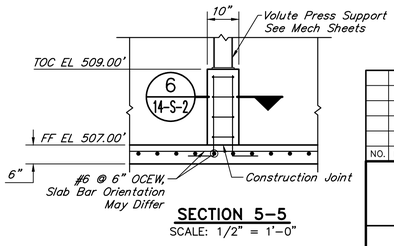

SECTION 5-5
SCALE: 1/2" = 1'-0"

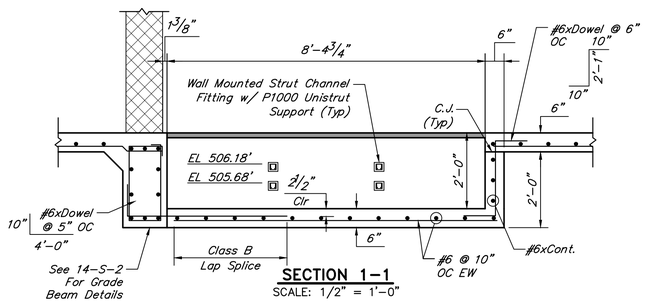

SECTION 1-1
SCALE: 1/2" = 1'-0"

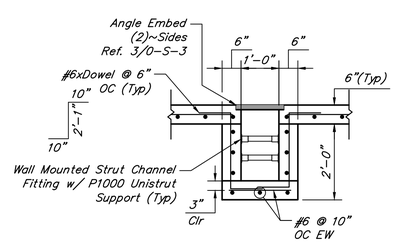

SECTION 2-2
SCALE: 1/2" = 1'-0"

SECTION 3-3
SCALE: 1/2" = 1'-0"

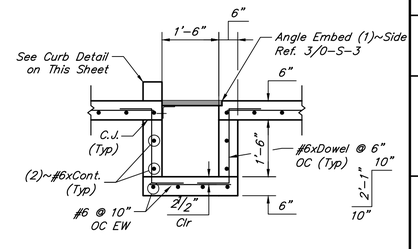

SECTION 4-4
SCALE: 1/2" = 1'-0"

NO.	DATE	REVISIONS	APP.

WILBARGER CREEK M.U.D. No. 2
TRAVIS COUNTY, TEXAS

WASTEWATER TREATMENT PLANT EXPANSION TO 1.5 MGD

DEWATERING BUILDING FOUNDATION PLAN, SECTIONS AND DETAILS

QUIDDITY
Texas Board of Professional Engineers and Land Surveyors Reg. No. F-23290
912 South Capital of Texas Hwy, Suite 300 • Austin, TX 78746 • 512.441.9493

SCALE:	AS SHOWN	DGN. BY:	JTREVINO
DATE:	JULY 2026	DWN. BY:	SFUENTES
JOB NO.	0A651-0021-02	DWG. NO.	
SUBMITTED:		SURV. BY:	
		F.B. NO.	

STATE OF TEXAS
AHMAD DANESHVAR
132679
LICENSED PROFESSIONAL ENGINEER
07/06/2026

14-S-1
SHEET NO. 142 OF 230

C:\Users\asalgado\DC\ACCDocs\Quiddity - Water-\0A651-0021-02 _ WILBARGER WWTP EXP. 1.5 MGD\Project Files\PLANS\STRUCTURAL\STRUC A14-DEWATERING FACILITY.dwg, Jul 06, 2026 - 3:15pm, asalgado

0 1 2 3 4 5 ORIGINAL SCALE IN INCHES FOR REDUCED PLANS

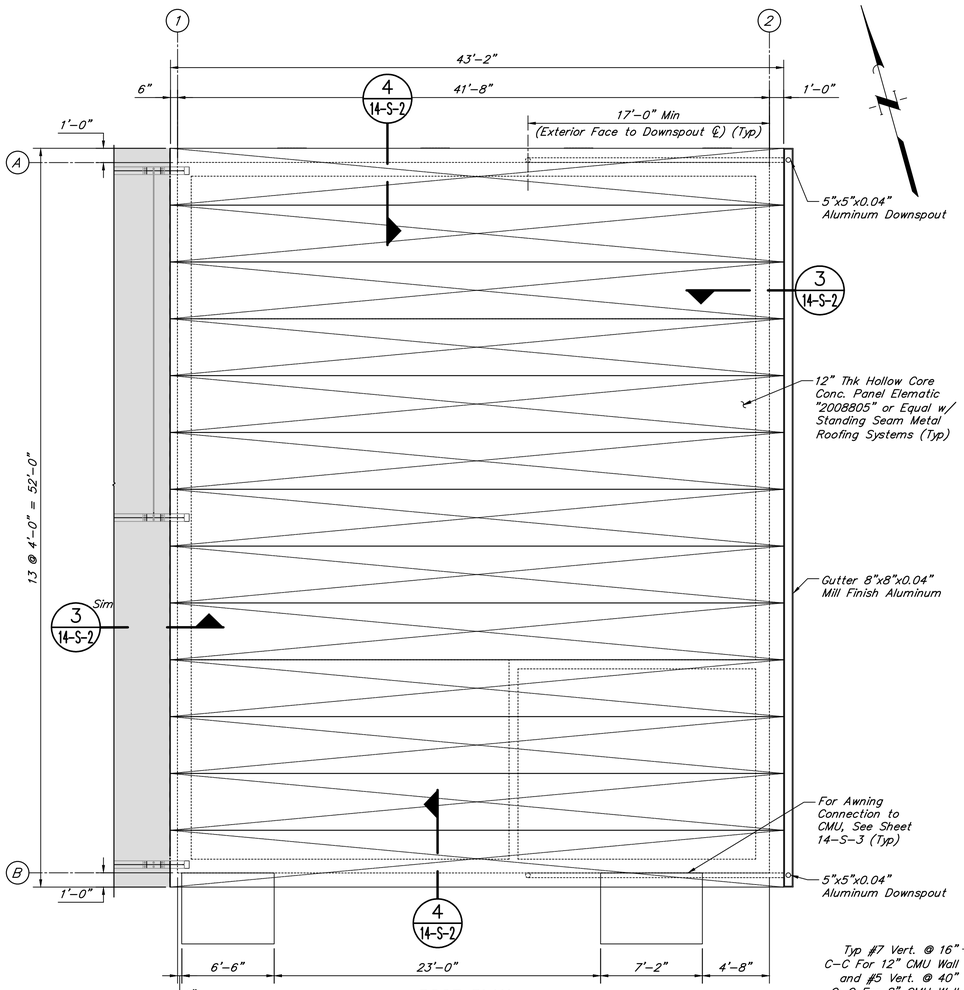

ROOF PLAN
SCALE: 3/16" = 1'-0"

MASONRY LINTEL SCHEDULE (CMU)	
Opening Width	Support Size
64" or Smaller	12" & 8" CMU Grout 2–#5 Cont
Greater than 64" & less then 120"	12" & 8" CMU #3 @ 12" C–C Grout 2–#5 Cont. Top & Bott.
Provide 8" min. bearing EA. end all grout fill to be 2500 psi min. All steel reinf. to be grade 60. See Mechanical Sheets for width & location of EA. opening.	

Notes:
1. Contractor shall provide a control joint plan prior to fabrication or construction.
2. Do not place control joint above or below openings.

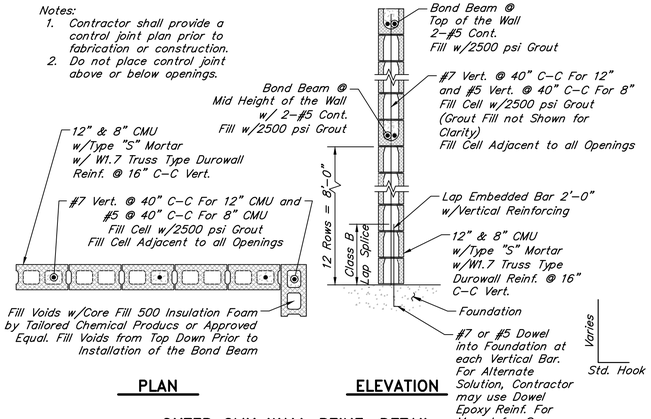

PLAN ELEVATION

OUTER CMU WALL REINF. DETAIL
NOT TO SCALE

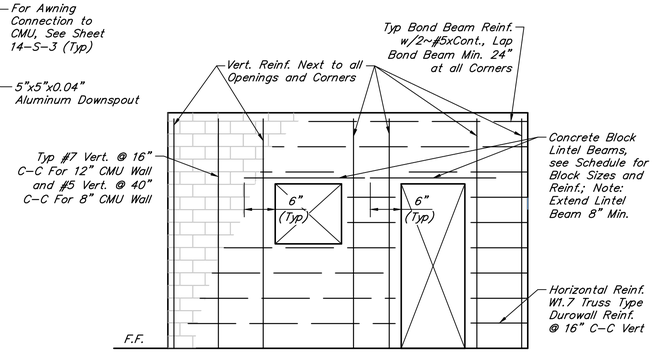

TYPICAL ELEVATION OF CONCRETE MASONRY WALL
NOT TO SCALE

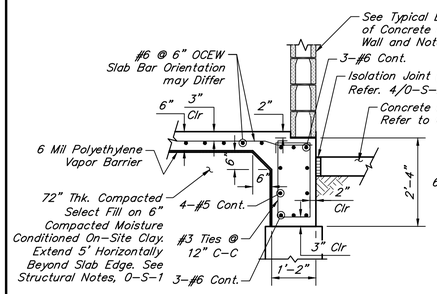

SECTION 1–1
SCALE: 1/2" = 1'-0"
Vertical Wall Reinforcement not Shown for Clarity

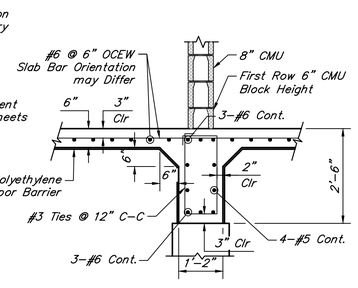

SECTION 2–2
SCALE: 1/2" = 1'-0"
Wall Details not Shown for Clarity

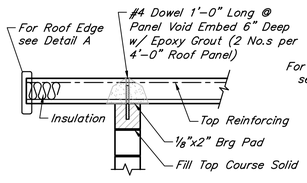

SECTION 3–3
SCALE: 1/2" = 1'-0"

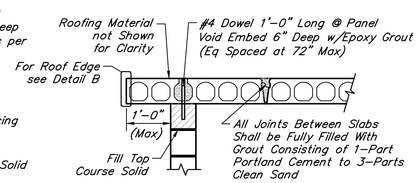

SECTION 4–4
SCALE: 1/2" = 1'-0"

BUILDING NOTES:

BUILDING CODE:

1. 2021 Edition of the international building code.
2. ASCE–7, Minimum design loads for buildings and other structures.
3. Proposed building category: II
   a. Type of construction: III–B
   b. Allowable No. of stories: 2 –Actual: 1 –50%
   c. Allowable building area: 8,500 sf –Actual: 2,083 SF –24.5%
   d. Allowable building height: 55 ft –Actual: 18 ft –32.7%
4. Risk category: III (Table 1604.5, Waste Water Treatment Facilities)
5. Fire resistance rating requirements for exterior walls:
   a. Fire separation (Distance – Greater than 30ft) –0 hr (Table 602)
   b. Rating of exterior building wall –2 hr
6. Maximum area of exterior wall openings:
   a. Unprotected, non–sprinkled–Greater than 30 ft –No–Limit (Table 705.8)
7. This drawing to be read in conjunction with Mechanical drawings.

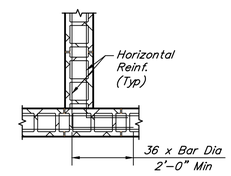

PLAN @ INTERSECTION

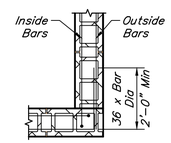

PLAN @ CORNER

NOTES:
1. Outside bars extend around corner, inside bars extend as far as possible and bend into corner cell.
2. Where single layer of reinforcing occurs, bend reinforcing as shown for outside bars.

TYPICAL DETAIL
BOND BEAM CORNER BARS
SCALE: 1/2" = 1'-0"

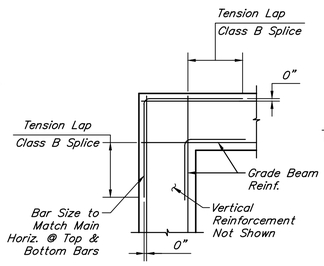

GRADE BEAM
CORNER DETAILS
3/4" = 1'-0"

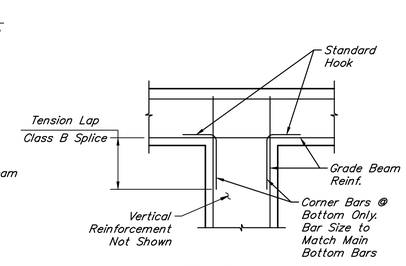

GRADE BEAM
INTERSECTION DETAILS
1/2" = 1'-0"

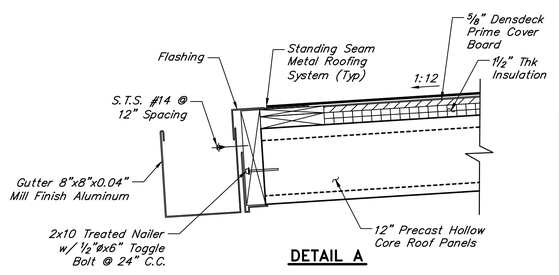

DETAIL A

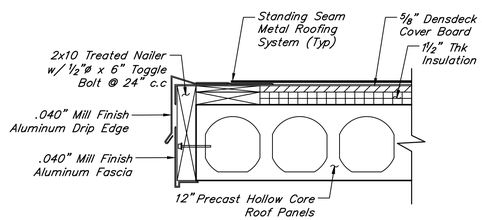

DETAIL B

NO.	DATE	REVISIONS	APP.

WILBARGER CREEK M.U.D. No. 2
TRAVIS COUNTY, TEXAS

WASTEWATER TREATMENT PLANT
EXPANSION TO 1.5 MGD

DEWATERING BUILDING ROOF PLAN AND SECTIONS

QUIDDITY
Texas Board of Professional Engineers and Land Surveyors Reg. No. F-23290
912 South Capital of Texas Hwy, Suite 300 • Austin, TX 78746 • 512.441.9493

SCALE:	AS SHOWN	DGN. BY:	JTREVINO
DATE:	JULY 2026	DWN. BY:	SFUENTES
JOB NO.	0A651–0021–02	DWG. NO.	
SUBMITTED:		SURV. BY:	
		F.B. NO.	

STATE OF TEXAS
AHMAD DANESHVAR
132678
LICENSED PROFESSIONAL ENGINEER
07/06/2026

14–S–2
SHEET NO. 143 OF 230

C:\Users\asalgado\DC\ACCDocs\Quiddity – Water–\0A651–0021–02 _ WILBARGER WWTP EXP. 1.5 MGD\Project Files\PLANS\STRUCTURAL\STRUC A14–DEWATERING FACILITY.dwg, Jul 06, 2026 – 3:16pm, asalgado

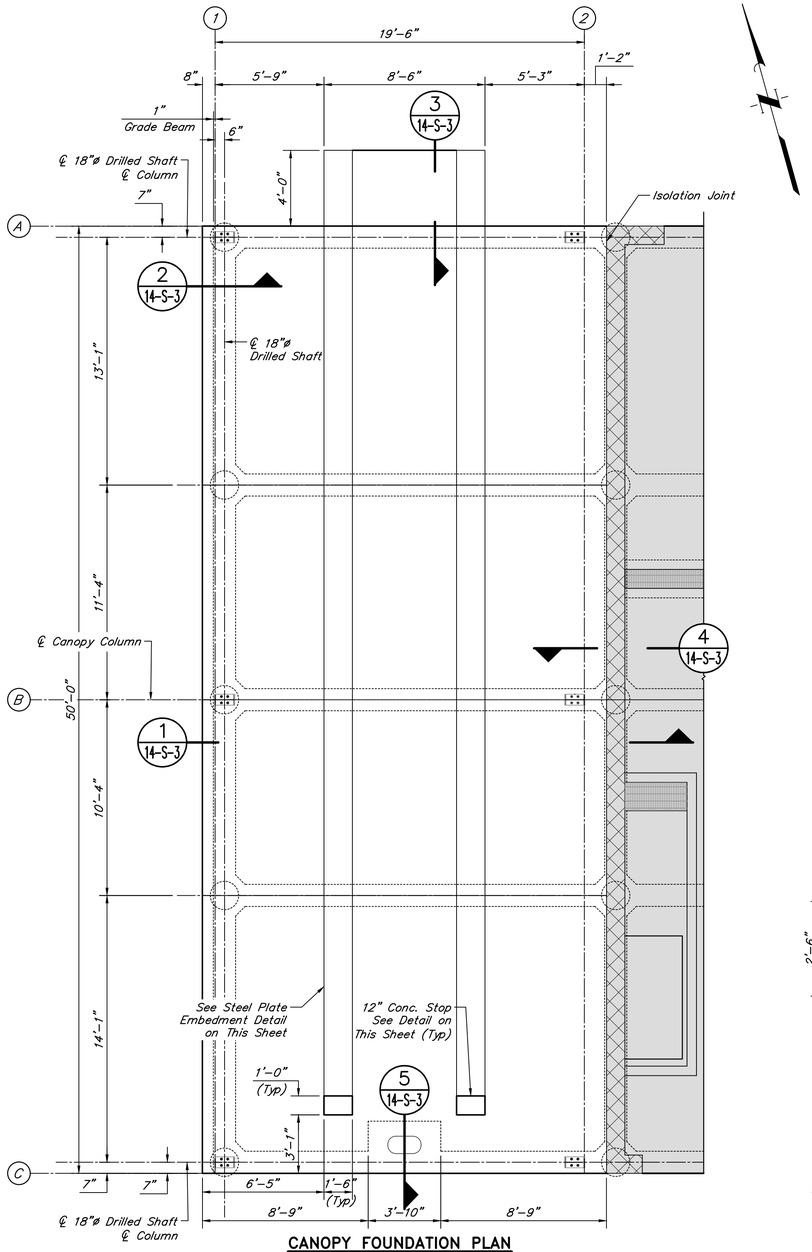

CANOPY FOUNDATION PLAN
SCALE: 1/4" = 1'-0"

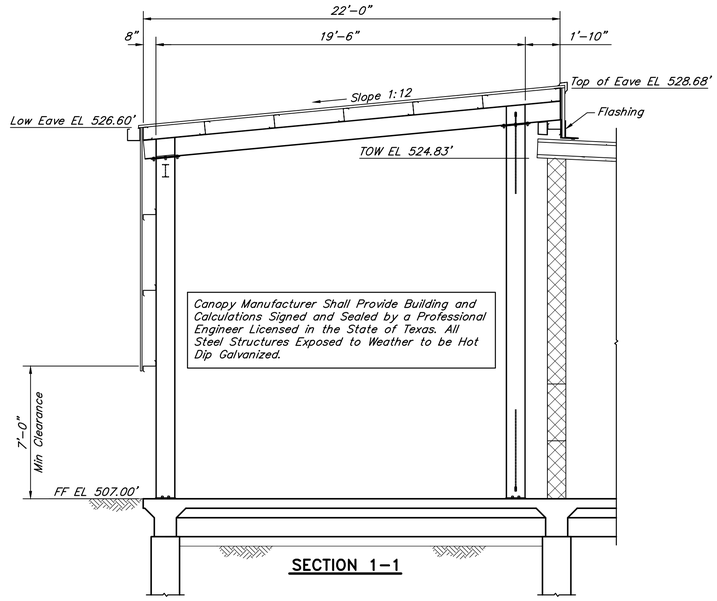

SECTION 1–1

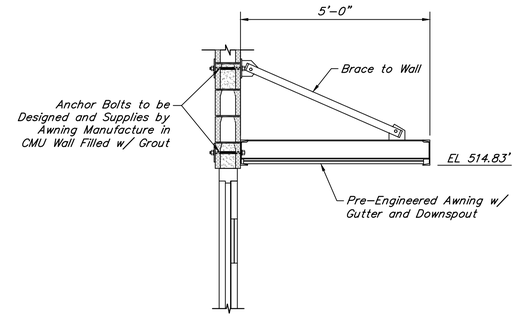

AWNING TO CMU CONNECTION DETAIL
SCALE: 1/2" = 1'-0"

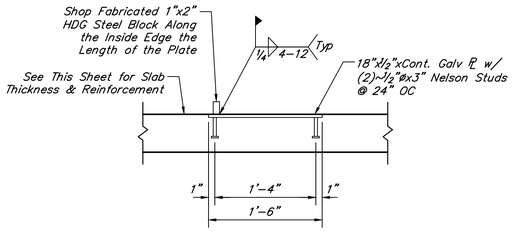

STEEL PLATE EMBEDMENT DETAIL

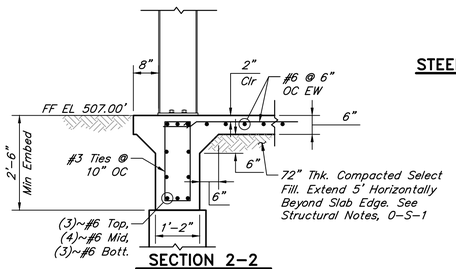

SECTION 2–2
SCALE: 1/2" = 1'-0"

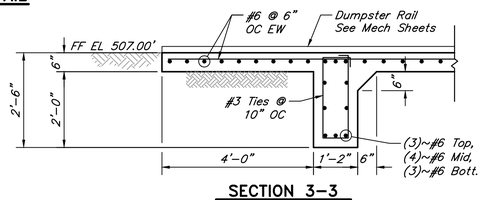

SECTION 3–3
SCALE: 1/2" = 1'-0"

CONCRETE BUMPER BLOCK DETAIL

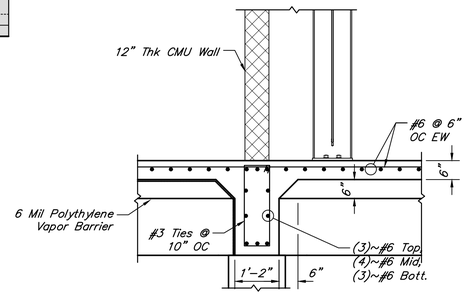

SECTION 4–4
SCALE: 1/2" = 1'-0"

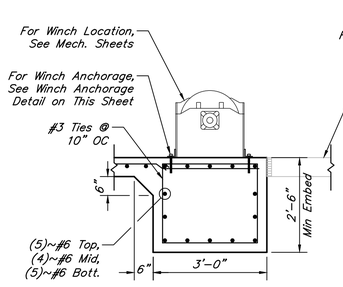

SECTION 5–5
SCALE: 1/2" = 1'-0"

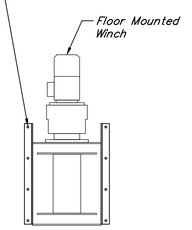

WINCH ANCHORAGE DETAIL
SCALE: 1/2" = 1'-0"

NO.	DATE	REVISIONS	APP.

WILBARGER CREEK M.U.D. No. 2
TRAVIS COUNTY, TEXAS

WASTEWATER TREATMENT PLANT EXPANSION TO 1.5 MGD

STEEL CANOPY FOUNDATION PLAN AND SECTIONS

QUIDDITY
Texas Board of Professional Engineers and Land Surveyors Reg. No. F-23290
912 South Capital of Texas Hwy, Suite 300 • Austin, TX 78746 • 512.441.9493

SCALE:	AS SHOWN	DGN. BY:	JTREVINO
DATE:	JULY 2026	DWN. BY:	SFUENTES
JOB NO.	0A651-0021-02	DWG. NO.	
SUBMITTED:		SURV. BY:	
		F.B. NO.	

STATE OF TEXAS
AHMAD DANESHVAR
132679
LICENSED PROFESSIONAL ENGINEER
07/06/2026

14-S-3
SHEET NO. 144 OF 230

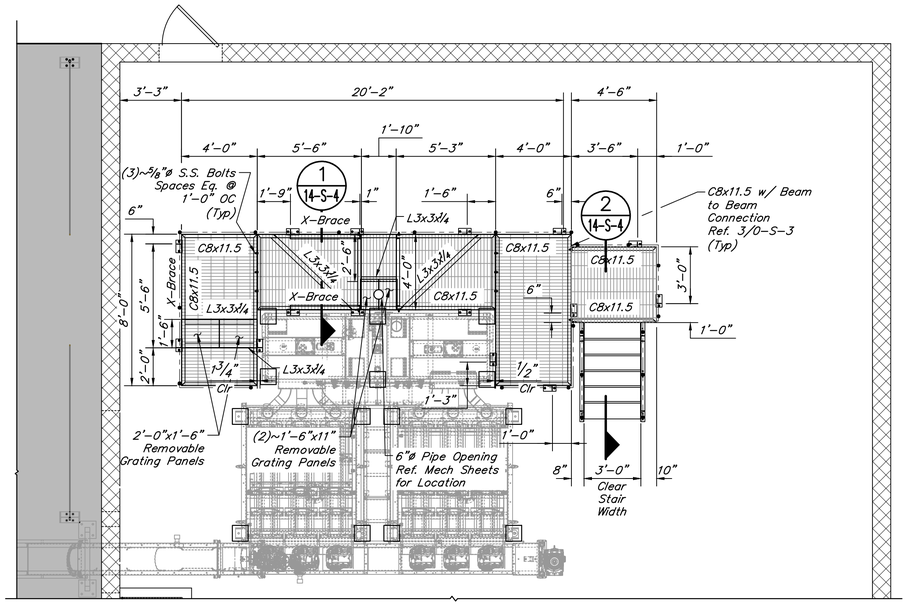

ELEVATED PLATFORM PLAN

SCALE: 1/4" = 1'-0"
(FOR VOLUTE PRESS DETAILS SEE MECH. SHEETS)

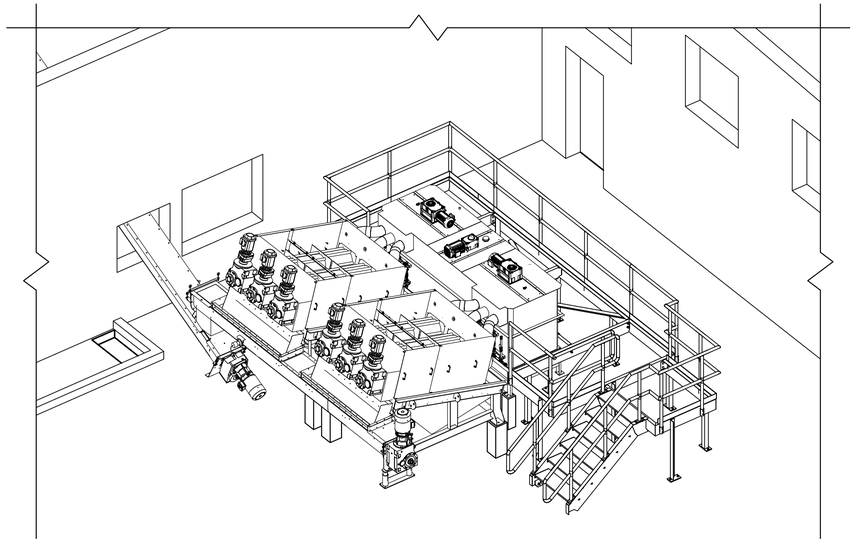

ELEVATED PLATFORM 3D VIEW

SCALE: 1/4" = 1'-0"

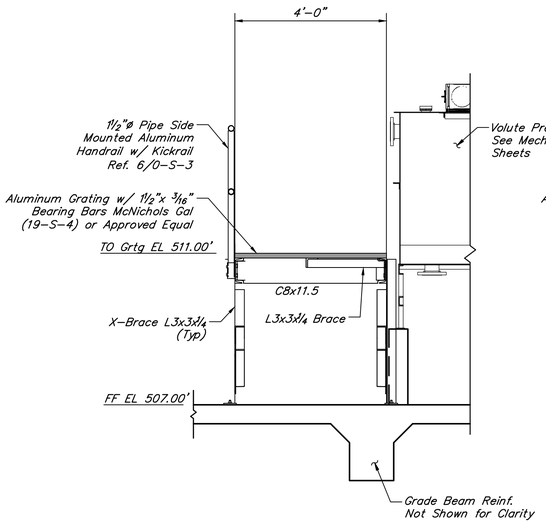

SECTION 1-1

SCALE: 1/2" = 1'-0"

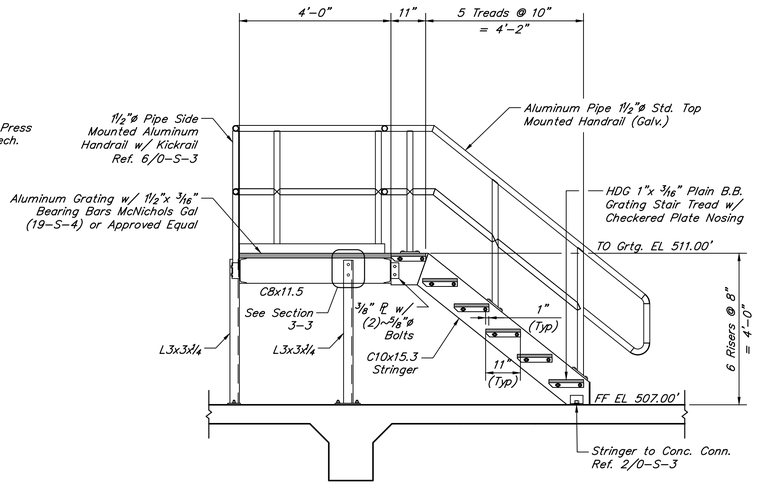

SECTION 2-2

SCALE: 1/2" = 1'-0"

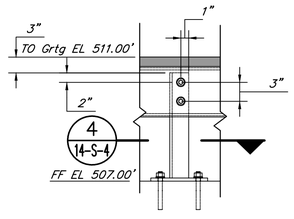

SECTION 3-3

SCALE: 1" = 1'-0"

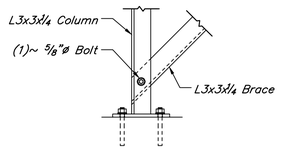

X-BRACE TO BASE PLATE CONNECTION

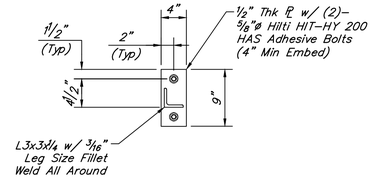

SECTION 4-4

SCALE: 1" = 1'-0"

NO.	DATE	REVISIONS	APP.

WILBARGER CREEK M.U.D. No. 2
TRAVIS COUNTY, TEXAS

WASTEWATER TREATMENT PLANT EXPANSION TO 1.5 MGD

VOLUTE PRESS PLATFORM PLAN AND SECTIONS

QUIDDITY
Texas Board of Professional Engineers and Land Surveyors Reg. No. F-23290
912 South Capital of Texas Hwy, Suite 300 • Austin, TX 78746 • 512.441.9493

SCALE:	AS SHOWN	DGN. BY:	JTREVINO
DATE:	JULY 2026	DWN. BY:	SFUENTES
JOB NO.	0A651-0021-02	DWG. NO.	
SUBMITTED:		SURV. BY:	
		F.B. NO.	

STATE OF TEXAS
AHMAD DANESHVAR
132678
LICENSED PROFESSIONAL ENGINEER
07/06/2026

14-S-4
SHEET NO. 145 OF 230

0 1 2 3 4 5 ORIGINAL SCALE IN INCHES FOR REDUCED PLANS

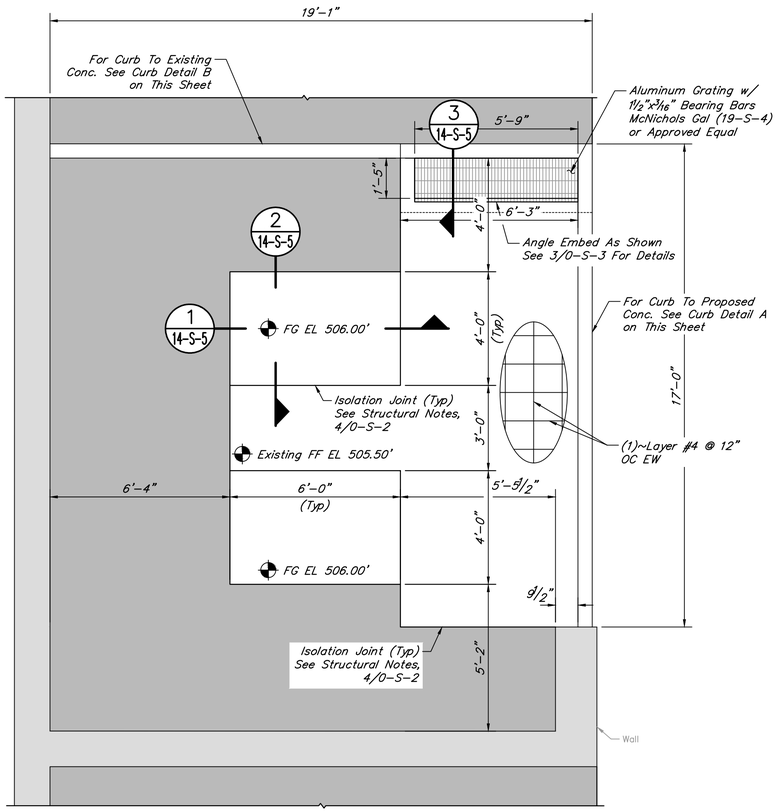

FOUNDATION PLAN
SCALE: 3/8" = 1'-0"

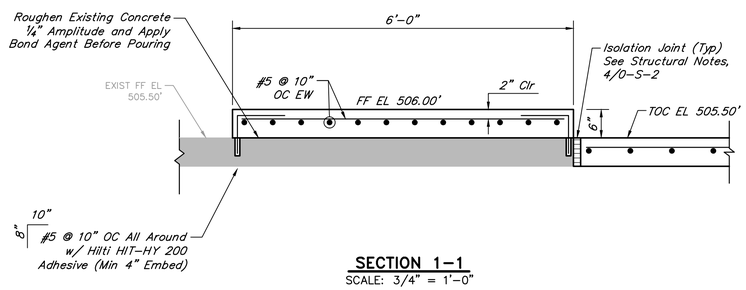

SECTION 1-1
SCALE: 3/4" = 1'-0"

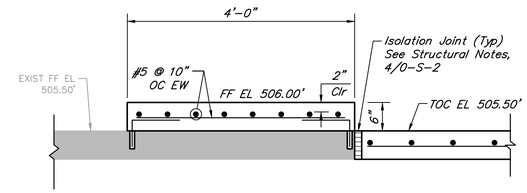

SECTION 2-2
SCALE: 3/4" = 1'-0"

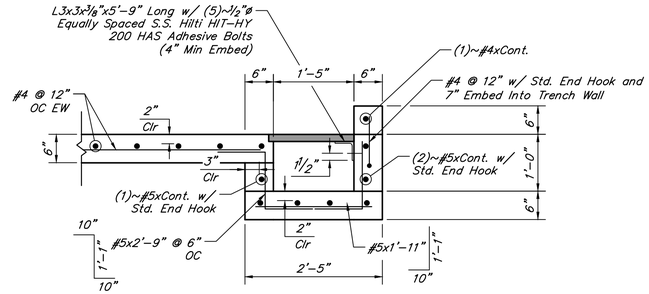

SECTION 3-3
SCALE: 3/4" = 1'-0"

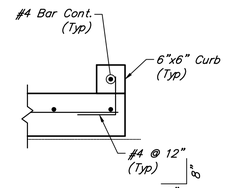

CURB DETAIL A
SCALE: 3/4" = 1'-0"

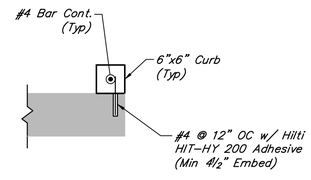

CURB DETAIL B
SCALE: 3/4" = 1'-0"

NO.	DATE	REVISIONS	APP.

WILBARGER CREEK M.U.D. No. 2
TRAVIS COUNTY, TEXAS

WASTEWATER TREATMENT PLANT
EXPANSION TO 1.5 MGD

PRESS FEED PUMP FOUNDATION PLAN AND SECTIONS

QUIDDITY
Texas Board of Professional Engineers and Land Surveyors Reg. No. F-23290
912 South Capital of Texas Hwy, Suite 300 • Austin, TX 78746 • 512.441.9493

SCALE:	AS SHOWN	DGN. BY:	JTREVINO
DATE:	JULY 2026	DWN. BY:	SFUENTES
JOB NO.	0A651-0021-02	DWG. NO.	
SUBMITTED:		SURV. BY:	
		F.B. NO.	

STATE OF TEXAS
AHMAD DANESHVAR
132679
LICENSED PROFESSIONAL ENGINEER
07/06/2026

14-S-5
SHEET NO. 146 OF 230

C:\Users\asalgado\DC\ACCDocs\Quiddity - Water-\0A651-0021-02 _ WILBARGER WWTP EXP. 1.5 MGD\Project Files\PLANS\STRUCTURAL\STRUC A14-DEWATERING FACILITY.dwg, Jul 06, 2026 - 3:18pm, asalgado

0 1 2 3 4 5 ORIGINAL SCALE IN INCHES FOR REDUCED PLANS

ELECTRICAL PLAN SHEET SYMBOLS

SYMBOL	DESCRIPTION	SYMBOL	DESCRIPTION
(A)	LIGHT FIXTURE (LETTER INDICATES TYPE PER SCHEDULE)	(FS)	FLOAT SWITCH
A	SINGLE SPECIAL PURPOSE RECEPTACLE (LETTER INDICATES TYPE PER SCHEDULE)	(S)	SOLENOID VALVE
	TELEPHONE UTILITY SYSTEM OUTLET	(FM)	FLOW METER
	CLASS 1, DIV I, CONDUIT SEAL	(PIT)	PRESSURE INDICATING TRANSMITTER
WP	RECEPTACLE, WP INDICATES A WET PROOF LOCATION COVER. NEMA 3R, UNLESS OTHERWISE INDICATED.	(OR)	OILER RESERVOIR
	UNFUSED SAFETY SWITCH – WP, 3P, 30A, 600V, NEMA 3R, UNLESS OTHERWISE INDICATED.		ULTRASONIC TRANSDUCER
30	FUSED SAFETY SWITCH – 3P, 600V, 30A MINIMUM, NEMA 3R OR AS REQUIRED TO ACCOMMODATE FUSE SIZE INDICATED	$	SINGLE POLE TOGGLE SWITCH
	COMBINATION PROTECTIVE DEVICE & MAGNETIC STARTER	$2	DOUBLE POLE TOGGLE SWITCH
	SINGLE UNIT PUSHBUTTON STATION	$3	3 – WAY SWITCH
	2–UNIT PUSHBUTTON STATION	$T	MANUAL ROTARY TIMER LIGHT SWITCH
	ON/OFF SELECTOR SWITCH	$WP	SINGLE POLE TOGGLE SWITCH, WP INDICATES WEATHERPROOF COVER
SS	"START/STOP" SELECTOR SWITCH	(J)	JUNCTION BOX
	AIR TERMINAL		EXPOSED CONDUIT
	FLEX CONDUIT		UNDERGROUND CONDUIT
	EXPOSED PUMP CABLE	G	BARE STRANDED GROUND CONDUCTOR
	CONDUIT CONCEALED IN FLOOR SLAB OR UNDER FLOOR SLAB. (CONDUITS 1–1/2" OR LARGER SHALL BE INSTALLED UNDER FLOOR SLAB). CONDUITS RUN UNDER FLOOR SLAB SHALL BE ENCASED IN CONCRETE. SEE NOTE 2	G	GROUND CONDUCTOR UNDERGROUND
	HOMERUN TO PANEL OR MCC AS NOTED	T	TELEPHONE CONDUCTORS
A EO	CONCRETE ENCASED DUCTBANK (SECTION INDICATES CONDUIT CONFIGURATION & DESIGNATIONS)	E	EMPTY CONDUIT
	LIGHTING PANEL		CAPPED CONDUIT
	UTILITY METERING CABINET	OH	POWER COMPANY OVERHEAD POLE LINE
	TELEPHONE UTILITY SYSTEM BACKBOARD	LS	LIMIT SWITCH
	TO BE DEMOLISHED	FS	FLOW SWITCH
	CABINET OR CONTROL PANEL ENCLOSURE	PS	PRESSURE SWITCH
	EXISTING	TS	TORQUE SWITCH
	PROPOSED	PLS	PNUEMATIC/ELECTRIC SWITCH
XXX	CONDUIT/CONDUCTOR TAGS	PLS	PROXIMITY LIMIT SWITCH
	GROUND WELL	DS	MAGNETIC REED DOOR SWITCH
		T	TRANSFORMER
			EXISTING DUCTBANK
			EXISTING DUCTBANK WITH PROPOSED CONDUCTORS
			PROPOSED DUCTBANK
			GROUND ROD

NOTES:

1. All construction shall comply with local and national codes and requirements.
2. Conduits shall not be routed across walkways, paths of access, travel, or egress. Route beneath gratings, in concrete structures, or around equipment. Do not route in conflict with other piping, conduits, equipment, or structures. Conduits imbedded in structural concrete (floor slabs, ETC.) shall be so located as not to unduly impair the strength of the construction and shall be spaced not less than two times the conduit OD between adjacent conduits except where crossing or otherwise approved by the engineer.
3. Field verify exact location of all underground pipes, conduits, and structures before digging. Repair any damage done to original condition.
4. Contractor shall be responsible for obtaining any and all permits associated with the work. The costs of the permits, if any, shall be borne by the Contractor.
5. This contract includes field installation and completion of vendor supplied components. All solenoids, float switches, transducers, motor operated valves, drive motors, alarm contacts, run lights, etc. are to be wired to vendor's panel or site motor controls as required. Contractor is to verify vendor–supplied components and provide a complete and operable system.
6. All exterior above grade conduit, duct bank elbows, and risers are to be PVC coated rigid galvanized steel conduit or PVC coated aluminum. Conduits within the Chemical Building are to be schedule 80 PVC. All conduits in duct banks shall be schedule 40 PVC. All mounting hardware to be stainless steel.
7. Items in bold are proposed, all others are existing.
8. Repair all damage to existing roads and sidewalks related to this construction to pre–existing conditions or better.
9. Any proposed underground duct banks crossing existing duct banks and pipes shall be routed underneath existing obstruction.
10. Support all outdoor above ground conduit every 8 ft w/stainless steel mounting hardware.
11. Wiring for lighting, receptacles and other miscellaneous circuits shall conform to the circuiting indicated on the drawings with arrangement and routing as required. The wiring shall be so arranged that no more than 3 current carrying conductors shall be installed per conduit and circuits of different panels shall be installed in separate raceways.
12. Any conduit without further designation indicates 3–#10 and 1–#12 GND in 1" conduit.

CONTROL DIAGRAM SYMBOL LEGEND

SYMBOL	DESCRIPTION	SYMBOL	DESCRIPTION
CR	CONTROL RELAY		HOLDING COIL CONTACT (NORMALLY OPEN–NORMALLY CLOSED)
TD	TIME DELAY RELAY	CR CR	CONTROL RELAY CONTACT (NORMALLY OPEN–NORMALLY CLOSED)
R	LED TYPE PILOT LIGHT PUSH–TO–TEST W–WHITE; R–RED; G–GREEN TEST WIRING NOT SHOWN FOR CLARITY	F	FLOAT SWITCH
	THERMOSTAT	PE	PHOTOELECTRIC SWITCH
TD 0–0–X	TIME DELAY CONTACT (O=OPEN, X=CLOSED, DESIGNATION INDICATES CONTACT POSITION WHEN RELAY IS RESET–TIMING–TIMED OUT)	B	BELL
	SPACE HEATER	ETM	ELASPED TIME METER
TD1 NO–TC	CONTACT ON TIME DELAY RELAY TIME DELAY CLOSED AFTER ENERGIZATION		CONTROL POWER TRANSFORMER
OFF–ON	ON–OFF SWITCH, 2 POSITION TOGGLE	M	MOTOR STARTER OPERATING COIL
	PUSHBUTTON, NORMALLY CLOSED	A	LIGHT FIXTURE, A = TYPE
	PUSHBUTTON, NORMALLY OPEN		MOTOR CONTROL STATION
	SELECTOR SWITCH		HAND–OFF–AUTO SELECTOR SWITCH
	CONTROL STATION/DISCONNECT SWITCH	SC	SURGE CAPACITOR
	MOMENTARY RESET PUSHBUTTON		SURGE ARRESTER
M	AUXILIARY STARTER CONTACTS		CONDUIT STUB UP
	PRESSURE SWITCH, OPENS ON RISE	H O A	HAND SELECTOR SWITCH
	PRESSURE SWITCH, CLOSES ON RISE	oH oO oA	
	LEVEL OR LEAK DETECTION SWITCH		FUSE
	LIMIT SWITCH, NORMALLY CLOSED		SOLENOID VALVE
	LIMIT SWITCH, NORMALLY OPEN		
	LIMIT SWITCH, NORMALLY OPEN, HELD CLOSED	OL's X2	OVERLOADS
	LIMIT SWITCH, NORMALLY CLOSED, HELD OPEN		GROUND CONNECTION
	TEMPERATURE ACTUATED SWITCH, OPENS ON RISE	R	PUSH–TO–TEST INDICATING LIGHT
	TEMPERATURE ACTUATED SWITCH, CLOSES ON RISE		MOUNTED ON FACE OF PANEL
PFC	POWER FACTOR CORRECTION CAPACITOR		

ONE–LINE DIAGRAM LEGEND

SYMBOL	DESCRIPTION	SYMBOL	DESCRIPTION
	MOLDED CASE CIRCUIT BREAKER	PM	3 PHASE POWER MONITOR (SINGLE PHASE PROTECTION RELAY)
	COMBINATION "MCP" MOTOR STARTER	NG	NEUTRAL/GROUND PAD
PFR	PHASE FAILURE RELAY	TS	TEMPERATURE SENSOR IN MOTOR
	SPACE HEATER	GB	GROUND BUS
F	EXHAUST FAN	IC	MICRO–SWITCH – STARTER DISCONNECT TO PREVENT CONTROL OPERATION WHEN MOTOR IS DE–ENERGIZED
G	INDICATING LIGHT (COLOR NOTED)		REDUCED VOLTAGE SOFT STARTER W/INTERNAL BYPASS CONTACTOR
3/4	3 PHASE MOTOR (HORSEPOWER NOTED)	FS	FLOAT SWITCH
SPD	SURGE PROTECTIVE DEVICE		FUSED SWITCH
	SYSTEM GROUND	R	LED TYPE PILOT LIGHT PUSH–TO–TEST W–WHITE; R–RED; G–GREEN TEST WIRING NOT SHOWN FOR CLARITY
	SERVICE HEAD	MCP	MOTOR CIRCUIT PROTECTOR
	TRANSFORMER		THERMAL OVERLOAD
	CURRENT TRANSFORMER		AUTOMATIC SWITCH
	FUSE	MS	MOISTURE SENSOR IN MOTOR
	POWER FACTOR CORRECTION CAPACITOR	TSH	HIGH TEMPERATURE SENSOR IN MOTOR
M	SERVICE METER	LKS	LOCKSTOP SWITCH
3	CONTROL CONTACT, 3 = NEMA STARTER SIZE		
ES	EMERGENCY STOP		
AM	AMMETER		

ABBREVIATIONS

A	AMP	MADC	MILLIAMPERE DIRECT CURRENT	S.S.	STAINLESS STEEL
ADJ	ADJUSTABLE	MCC	MOTOR CONTROL CENTER	SW	SWITCH
AFF	ABOVE FINISHED FLOOR	MCP	MOTOR CIRCUIT PROTECTOR	TEMP	TEMPERATURE
AI	ANALOG INPUT	MIN.	MINUTES	TD	TIME DELAY RELAY
ALT	ALTERNATOR	MOR	MOTOR OVERLOAD RELAY	TDLP	LOSS OF POWER TIME DELAY RELAY
AO	ANALOG OUTPUT	mS	MILLISECOND	TDRM	PUMP TIME DELAY RELAY
ATS	AUTOMATIC TRANSFER SWITCH	MTH	MOTOR TEMPERATURE SWITCH	TSP	TWISTED SHIELDED PAIR
C	CONDUIT	MTS	MANUAL TRANSFER SWITCH	UPS	UNINTERRUPTIBLE POWER SUPPLY
CA	CABLE	N	NEUTRAL	V	VOLTS
CAB	CABINET	N3R	NEMA 3R	VA	VOLT–AMP
CAT.	CATALOG	N4X	NEMA 4X	VAC	VOLTS ALTERNATING CURRENT
CB	CIRCUIT BREAKER	N.C.	NORMALLY CLOSED	VDC	VOLTS DIRECT CURRENT
CKT	CIRCUIT	NEC	NATIONAL ELECTRICAL CODE	W	WATT OR WIRE
CNP	CENTERPOINT POWER	NEUT	NEUTRAL	WM	WATT MISER (HIGH EFFICIENCY LAMP)
COMM	COMMUNICATIONS	N.O.	NORMALLY OPEN	WP	WEATHER PROOF
CONT	CONTINUED	OL	OVERLOAD	XFMR	TRANSFORMER
CPT–N	CONTROL POWER TRANSFORMER NEUTRAL	P	POLE		
CPU	CENTRAL PROCESSING UNIT	PLC	PROGRAMMABLE LOGIC CONTROLLER		
CT	CURRENT TRANSFORMER	POS	POSITION		
CU	COPPER	PS	PRESSURE SWITCH		
CW	COOL WHITE	PVC	POLYVINYL CHLORIDE		
DI	DISCRETE INPUT	PVC RGS	PVC COATED RIGID GALV CONDUIT		
DIREC	DIRECTIONAL	PWR	POWER		
DIV	DIVISION	R	RELAY		
DN	DOWN	RALM	PUMP ALARM RELAY		
DO	DISCRETE OUTPUT	REE	ELEC BLDG ENTRY AUX RELAY		
ETM	ELAPSED TIME METER	RGS	RIGID GALVANIZED CONDUIT		
G.E.	GENERAL ELECTRIC	RHLA	HIGH LEVEL ALARM RELAY		
GFI	GROUND FAULT INTERRUPT	RM	PUMP RUN AUX RELAY		
GND	GROUND	RMOR	MOTOR OVERLOAD AUX RELAY		
HL&P	HOUSTON LIGHTING & POWER	RMTH	MOTOR TEMPERATURE RELAY		
H–O–A	HAND OFF AUTO	RPLC	PLC MODE AUX RELAY		
HPS	HIGH PRESSURE SODIUM	RPLCOR	PLC OVERRIDE		
INC	INCANDESCENT	RPLM	PLC PUMP RUN RELAY		
JB	JUNCTION BOX	RPLMP	BACKUP SYSTEM RUN RELAY		
KA SYM	THOUSAND AMPS SYMMETRICAL	RR	RUN RELAY		
KS	KEY SWITCH	RRST	PUMP RESET AUX RELAY		
KVA	KILO–VOLT–AMPS	RRST5	MODEM RESET RELAY		
KW	KILO–WATT	RTAH	TEMPERATURE ALARM AUX RELAY		
L	LINE	RUV	UNDERVOLTAGE AUX RELAY		
LOS	LOCK OUT STOP	RVSS	REDUCED VOLTAGE SOFT STARTER		
LS	LIMIT SWITCH	RWD	WATCHDOG RELAY		
LSI	LONG TIME, SHORT TIME, INSTANTANEOUS	SEC	SECONDS		
LSIG	LONG TIME, SHORT TIME, INSTANTANEOUS, GROUND FAULT	SL	SEAL LEAK SWITCH		
LV	LOW VOLTAGE	SN	SOLID NEUTRAL		
LVN	LOW VOLTAGE NEUTRAL	SP	SURGE PROTECTOR		
M	MOTOR RUN CONTACT	SPD	SURGE PROTECTION DEVICE		
		SPST	SINGLE POLE SINGLE THROW		
		SS	SELECTOR SWITCH		

NO.	DATE	REVISIONS	APP.

WILBARGER CREEK M.U.D. No. 2
TRAVIS COUNTY, TEXAS

WASTEWATER TREATMENT PLANT EXPANSION TO 1.5 MGD

ELECTRICAL NOTES, LEGENDS AND ABBREVIATIONS

QUIDDITY
Texas Board of Professional Engineers and Land Surveyors Reg. No. F-23290
912 South Capital of Texas Hwy, Suite 300 • Austin, TX 78746 • 512.441.9493

SCALE:	NONE	DGN. BY:	EFLORES
DATE:	FEBRUARY 2026	DWN. BY:	SSOMERS
JOB NO.	0A651–0021–02	DWG. NO.	
SUBMITTED:		SURV. BY:	
		F.B. NO.	

STATE OF TEXAS
BAO LE THIEN TRAN
149385
LICENSED PROFESSIONAL ENGINEER
03/10/2026

0–E–1
SHEET NO. 147 OF 230

C:\Users\cgular\DC\ACCDocs\Quiddity – Water–\0A651–0021–02 _ WILBARGER WWTP EXP. 1.5 MGD\Project Files\PLANS\ELEC.dwg, Feb 18, 2026 – 6:37pm, cgular

0 1 2 3 4 5 ORIGINAL SCALE IN INCHES FOR REDUCED PLANS

WILBARGER WWTP EXIST MOTOR CONTROL CENTER No. 1 (MCC-12-001) LOAD ANALYSIS

EQUIPMENT TAG	DESCRIPTION	HP/KVA	TOTAL CONNECTED LOAD (KVA)	TOTAL CONTINUOUS DUTY LOAD (KVA)	TOTAL GENERATOR LOAD (KVA) (SEE NOTE 1)
AREA No. 2 - LIFT STATION					
SP-02-101	***LIFT PUMP No. 1 (See Note 2)***	***25***	***28.00***	***28.00***	***28.00***
SP-02-201	***LIFT PUMP No. 2 (See Note 2)***	***25***	***28.00***	***28.00***	***28.00***
SP-02-301	***LIFT PUMP No. 3 (See Note 2)***	***25***	***28.00***	***28.00***	***28.00***
SP-02-401	***LIFT PUMP No. 4***	***25***	***28.00***	-	-
AREA No. 3 - HEADWORKS					
CP-03-001	EXIST HEADWORKS CONTROL PANEL No. 1	-	-	-	-
MFS-03-101	EXIST MECHANICAL FILTER SCREEN	1	1.70	1.70	1.70
MFS-03-102	EXIST MECHANICAL FILTER SCREEN BRUSH	2	2.80	2.80	2.80
WC-03-001	***WASHER COMPACTOR***	***2***	***2.80***	***2.80***	***2.80***
VMP-03-001	EXIST HEADWORKS NPW BOOSTER PUMP	5	6.30	6.30	-
-	EXIST HEADWORKS CONTROL PANEL No. 1 MISC	1.5 KVA	1.50	1.50	1.50
CP-03-002	***HEADWORKS CONTROL PANEL No. 2***	-	-	-	-
MFS-03-301	***MECHANICAL FINE SCREEN***	***1***	***1.70***	***1.70***	***1.70***
MFS-03-302	***MECHANICAL FINE SCREEN BRUSH***	***2***	***2.80***	***2.80***	***2.80***
-	***HEADWORKS CONTROL PANEL No. 2 MISC***	***1.5 KVA***	***1.50***	***1.50***	***1.50***
PV-03-005	***PLUG VALVE***	***5***	***6.30***	***6.30***	***6.30***
PV-03-006	***PLUG VALVE***	***5***	***6.30***	***6.30***	***6.30***
AREA No. 4 - PEAK SHAVING BASIN					
CP-04-001	***PEAK SHAVING BASIN CONTROL PANEL***	-	-	-	-
SPP-04-101	EXIST PEAK SHAVING BASIN SLUDGE PUMP No. 1	15.0	17.00	17.00	17.00
SPP-04-201	EXIST PEAK SHAVING BASIN SLUDGE PUMP No. 2	15.0	17.00	17.00	17.00
SPP-04-301	***PEAK SHAVING BASIN SLUDGE PUMP No. 3***	***15.0***	***17.00***	-	-
-	***PEAK SHAVING BASIN CONTROL PANEL MISC.***	***1.5 KVA***	***1.50***	***1.50***	***1.50***
Area No. 6 - CLARIFIERS					
CP-06-101	EXIST CLARIFIER No. 1 CONTROL PANEL	-	-	-	-
SC-06-101	EXIST CLARIFIER No. 1	1	1.70	1.70	1.70
-	EXIST CLARIFIER No. 1 CONTROL PANEL MISC.	1 KVA	1.00	1.00	1.00
CP-06-201	EXIST CLARIFIER No. 2 CONTROL PANEL	-	-	-	-
SC-06-201	EXIST CLARIFIER No. 2	1	1.70	1.70	1.70
-	EXIST CLARIFIER No. 2 CONTROL PANEL MISC.	1 KVA	1.00	1.00	1.00
CP-06-301	***CLARIFIER No. 3 CONTROL PANEL***	-	-	-	-
SC-06-301	***CLARIFIER No. 3***	***1***	***1.70***	***1.70***	***1.70***
-	***CLARIFIER No. 3 CONTROL PANEL MISC.***	***1 KVA***	***1.00***	***1.00***	***1.00***
Area No. 7 - TERTIARY FILTERS					
CP-07-101	EXIST FILTER No. 1 CONTROL PANEL	-	-	-	-
DF-07-101	EXIST DISK FILTER No. 1	1	1.70	1.70	1.70
SPP-07-101	EXIST BACKWASH PUMP No. 1A	3	4.00	4.00	4.00
SPP-07-102	EXIST BACKWASH PUMP No. 1B	3	4.00	-	-
-	EXIST FILTER No. 1 CONTROL PANEL MISC	3 KVA	3.00	3.00	3.00
CP-07-201	EXIST FILTER No. 2 CONTROL PANEL	-	-	-	-
DF-07-201	EXIST DISK FILTER No. 2	1	1.70	1.70	1.70
SPP-07-201	EXIST BACKWASH PUMP No. 2A	3	4.00	4.00	4.00
SPP-07-202	EXIST BACKWASH PUMP No. 2B	3	4.00	-	-
-	EXIST FILTER No. 2 CONTROL PANEL MISC	3 KVA	3.00	3.00	3.00
Area No. 8 - CHLORINE CONTACT BASIN					
CP-08-101	EXIST BLEACH MIXER CONTROL PANEL	-	-	-	-
SM-08-101	EXIST BLEACH MIXER No. 1	5	6.30	6.30	6.30
SM-08-102	EXIST BLEACH MIXER No. 2	5	6.30	-	-
-	EXIST BLEACH MIXER CONTROL PANEL MISC	1 KVA	1.00	1.00	1.00
CP-08-201	EXIST SODIUM BISULFITE MIXER CONTROL PANEL	-	-	-	-
SM-08-201	EXIST SODIUM BISULFITE MIXER No. 1	5	6.30	6.30	6.30
SM-08-202	EXIST SODIUM BISULFITE MIXER No. 2	5	6.30	-	-
-	EXIST SODIUM BISULFITE CONTROL PANEL MISC	1 KVA	1.00	1.00	1.00
Area No. 9 - BLOWERS					
MSB-09-101	EXIST BLOWER No. 1	75	80.00	80.00	80.00
MSB-09-201	EXIST BLOWER No. 2	75	80.00	80.00	80.00
MSB-09-301	EXIST BLOWER No. 3	75	80.00	80.00	80.00
MSB-09-401	EXIST BLOWER No. 4	75	80.00	80.00	80.00
MSB-09-501	EXIST BLOWER No. 5	75	80.00	80.00	80.00
MSB-09-601	***BLOWER No. 6***	***75***	***80.00***	***80.00***	-
Area No. 10 - NON-POTABLE WATER					
CP-10-001	***NON-POTABLE WATER SYSTEM CONTROL PANEL***	-	-	-	-
SPP-10-101	***NPW PUMP No. 1***	***25***	***28.00***	***28.00***	***28.00***
SPP-10-201	***NPW PUMP No. 2***	***25***	***28.00***	-	-
-	***NPW CONTROL PANEL MISC***	***1 KVA***	***1.00***	***1.00***	***1.00***
Area No. 11 - CHEMICAL DISINFECTION SYSTEM					
XFMR-11-001	***10 kVA TRANSFORMER***	***10 KVA***	***10.00***	***10.00***	***10.00***
SFAN-11-001	***SUPPLY FAN No. 1***	***1***	***1.70***	***1.70***	***1.70***
SFAN-11-002	***SUPPLY FAN No. 2***	***1***	***1.70***	***1.70***	***1.70***
Area No. 12 - ELECTRICAL ROOM					
-	EXIST MCC ROOM A/C UNIT	9 KVA	9.00	9.00	9.00
-	EXIST STORAGE ROOM A/C UNIT	6 KVA	6.00	6.00	-
-	EXIST 37.5 kVA TRANSFORMER	37.5 KVA	37.50	37.50	37.50

WILBARGER WWTP SWITCHBOARD No. 1 (SW-14-001) LOAD ANALYSIS

Area No. 14 - DEWATERING					
DDP-14A-101	***PRESS FEED PUMP No. 1***	***15***	***17.00***	***17.00***	-
DDP-14A-201	***PRESS FEED PUMP No. 2***	***15***	***17.00***	***17.00***	-
VMP-14B-101	***NPW BOOSTER PUMP No. 1***	***2***	***2.80***	***2.80***	-
VMP-14B-201	***NPW BOOSTER PUMP No. 2***	***2***	***2.80***	***2.80***	-
PBU-14C-101	***POLYMER BLENDING UNIT No. 1***	***1***	***1.70***	***1.70***	-
PBU-14C-201	***POLYMER BLENDING UNIT No. 2***	***1***	***1.70***	***1.70***	-
FCT-14D-101	***FLOCCULATION MIXER No. 1***	***3***	***4.00***	***4.00***	-
FCT-14D-102	***FLOCCULATION MIXER No. 3***	***3***	***4.00***	***4.00***	-
FCT-14D-103	***FLASH MIXER***	***3***	***4.00***	***4.00***	-
VP-14D-101A	***VOLUTE PRESS MOTOR No. 1***	***3***	***4.00***	***4.00***	-
VP-14D-101B	***VOLUTE PRESS MOTOR No. 2***	***3***	***4.00***	***4.00***	-
VP-14D-101C	***VOLUTE PRESS MOTOR No. 3***	***3***	***4.00***	***4.00***	-
VP-14D-101D	***VOLUTE PRESS MOTOR No. 4***	***3***	***4.00***	***4.00***	-
VP-14D-101E	***VOLUTE PRESS MOTOR No. 5***	***3***	***4.00***	***4.00***	-
VP-14D-101F	***VOLUTE PRESS MOTOR No. 6***	***3***	***4.00***	***4.00***	-
SCC-14D-101	***VOLUTE PRESS CONVEYOR MOTOR No. 1***	***5***	***6.30***	***6.30***	-
SCC-14D-102	***VOLUTE PRESS CONVEYOR MOTOR No. 2***	***5***	***6.30***	***6.30***	-
WCH-14D-101	***DEWATERING BUILDING WINCH***	***10***	***12.00***	***12.00***	-
SFAN-14-001	***DEWATERING BUILDING SUPPLY FAN No. 1***	***2***	***2.80***	***2.80***	-
SFAN-14-002	***DEWATERING BUILDING SUPPLY FAN No. 2***	***2***	***2.80***	***2.80***	-
SFAN-14-003	***DEWATERING BUILDING SUPPLY FAN No. 3***	***2***	***2.80***	***2.80***	-
SFAN-14-004	***DEWATERING BUILDING SUPPLY FAN No. 4***	***2***	***2.80***	***2.80***	-
-	***ROLL-UP DOOR MOTOR***	***1***	***1.70***	***1.70***	-
XFMR-14-001	***37.5 kVA TRANSFORMER***	***37.5 KVA***	***37.50***	***37.50***	-
	SUBTOTAL CONNECTED LOAD (KVA)		1015.80	922.20	675.90
	25% OF LARGEST MOTOR (KVA)		20.00	20.00	-
	TOTAL CONNECTED LOAD (KVA)		1035.80	942.20	675.90
	TOTAL CONNECTED LOAD AT 480VAC, 3-PHASE (AMPS)		1247.35	1134.63	813.95
	TOTAL SPARE LOAD AT 480VAC, 3-PHASE (AMPS)		352.65	465.37	89.23
	EXIST SERVICE ENTRANCE MAIN BREAKER (AMPS)		1600AF/1600AT		
	EXIST ATS RATING (AMPS)		1600A		
	EXIST GENERATOR RATING (KW/KVA)		600KW/750KVA		
	EXIST GENERATOR FULL LOAD AMPS (AMPS)		903.18		

NOTES:

1. Not all loads can be supported by the existing generator. Operator shall turn off the required loads when running on emergency power.
2. While running on emergency power, lift pumps shall only run until lift station is pumped down.

LIGHTING FIXTURE SCHEDULE

TYPE	MOUNTING	VOLTAGE	LAMP TYPE	DESCRIPTION	MFR.	CATALOG NUMBER
C	SUSPENDED	120V	LED	COMPACT DESIGN STRIP CHANNEL AND COVER ARE FORMED FROM CODE-GAUGE COLD ROLLED STEEL; DIFFUSED POLYCARBONATE LENS; U.L. LISTED FOR DAMP LOCATION; 4' LIGHT; 50 WATT; 4500 LUMENS; 4000K; 80 CRI	LITHONIA LIGHTING	CSS-L48-4000LM-MVOLT-40K-80CRI
C2	SUSPENDED	120V	LED	GASKETED POLYCARBONATED HOUSING; FROSTED POLYCARBONATE LENS, U.L. LISTED FOR WET LOCATION; 4' LIGHT; 50 WATT; 5000 LUMENS; 4000K; 80CRI	LITHONIA LIGHTING	CSVT-L48-5000LM-MVOLT-40K-80CRI
E	EMERGENCY	120V	LED	EMERGENCY LIGHTING UNIT WITH WET PROTECTIVE VANDAL SHIEL OPTION. MAINTENANCE-FREE NICKEL-CADMIUM BATTER PROVIDES 90 MIN. OF EMERGENCY POWER. BLACK FINISH.	LITHONIA LIGHTING	ELM2L-B-UVOLT-WPVS
FL1	BUILDING FLOODLIGHT	120V	LED - 4000K - 32,000 LUMEN	FLOODLIGHT, CAST ALUMINUM HOUSING, SUITABLE FOR WET LOCATION, LED WITH 32,000 LUMENS, 6X5 DISTRIBUTION, 4000K COLOR TEMP, BLACK FINISHED, PHOTOCONTROL,TENON SLIPFITTER - KNUCKLE MOUNTING	LITHONIA LIGHTING	RSXF1-LED-P3-40K-MFL-MVOLT-IS-PE-DBLXD
S1	1-1/2" STANCHION, 25 DEGREE	120V	LED - 5000K - 42 WATT	ENCLOSED AND GASKETED ALUMINUM HOUSING; UL LISTED FOR CLASS I DIV. 2 AND WET LOCATIONS; 1.5" NPT ENTRY CONNECTION; GLOBE AND GUARD	RAB LIGHTING	HAZSLED42C-G
W	WALL - ABOVE DOOR	120V	LED	WALL FIXTURE SUITABLE FOR WET LOCATION; 4000K; TYPE III MEDIUM DISTRIBUTION; INTEGRAL PHOTOCELL; BLACK FINISH. MAINTENANCE-FREE NICKEL-CADMIUM BATTERY PROVIDES 90 MIN. OF EMERGENCY POWER.	LITHONIA LIGHTING	TWR1-E7WC-LED-ALO-SWW2-UVOLT-PE-DDBTXD
X	WALL - ABOVE DOOR	120V	LED	COMBINATION EMERGENCY LIGHTING UNIT AND EXIT. MAINTENANCE-FREE NICKEL-CADMIUM BATTERY PROVIDES 90 MIN. OF EMERGENCY POWER. RED LETTER.	LITHONIA LIGHTING	ECRG-RD-M6

NO.	DATE	REVISIONS	APP.

WILBARGER CREEK M.U.D. No. 2
TRAVIS COUNTY, TEXAS

WASTEWATER TREATMENT PLANT EXPANSION TO 1.5 MGD

ELECTRICAL SCHEDULES – SHEET 1 OF 2

QUIDDITY
Texas Board of Professional Engineers and Land Surveyors Reg. No. F-23290
912 South Capital of Texas Hwy, Suite 300 • Austin, TX 78746 • 512.441.9493

SCALE: NONE
DATE: JULY 2026
JOB NO. 0A651-0021-02
SUBMITTED:
DGN. BY: EFLORES
DWN. BY: SSOMERS
DWG. NO.
SURV. BY:
F.B. NO.

STATE OF TEXAS
BAO LE THIEN TRAN
149385
LICENSED PROFESSIONAL ENGINEER
07/01/2026

0-E-2
SHEET NO. 148 OF 230

C:\Users\JAS\DC\ACCDocs\Quiddity\0A651-0021-02 _ WILBARGER WWTP EXP. 1.5 MGD\Project Files\PLANS\ELEC.dwg, Jul 01, 2026 - 2:04pm, JAS

0 1 2 3 4 5 ORIGINAL SCALE IN INCHES FOR REDUCED PLANS

EXIST LIGHTING PANEL "A", 225A BUS, 120/240 VOLT, 1-PHASE, 3-WIRE, 60 HZ, 10 KAIC, 100% RATED NEUTRAL, SURFACE MOUNTED, LOCATED AT MCC BUILDING, NEMA 1 ENCLOSURE

Notes	CIRCUIT DESCRIPTION	LOAD KVA LINE 1	LOAD KVA LINE 2	AMP/POLE	CKT NO	CKT NO	AMP/POLE	LOAD KVA LINE 1	LOAD KVA LINE 2	CIRCUIT DESCRIPTION	Notes
	SPARE	-	-	20/1	1	2	**20/1**	**-**	**1.20**	**BLOWER MOTOR SPACE HEATERS**	**1, 2**
1	LIFT STATION CONTROL PLC PANEL (CP-02-001)	-	0.5	20/1	3	4	20/1	0.10	-	SLUDGE HOLDING TANK FLOW METERS	1
1	HEADWORKS LIGHTS	1.58	-	30/1	5	6	20/1	-	0.40	MCC ROOM LIGHTS	1
1	HEADWORKS RECEPTACLES	-	1.62	20/1	7	8	20/1	1.08	-	MCC ROOM RECEPTACLES	1
1, 2	**AERATION BASIN FLOW METERS**	**0.10**	-	20/1	9	10	20/1	-	0.18	BATHROOM RECEPTACLES	1
1, 2	**AERATION BASING LIGHTS & RECEPTACLES**	**-**	**1.90**	20/1	11	12	20/1	2	-	BATHROOM WATER HEATER	1
1, 2	**CLARIFIER LIGHTS & RECEPTACLES**	**1**	-	20/1	13	14	20/1	-	0.3	BATHROOM LIGHTS	1
1	FILTER BASIN TURBIDITY METER PANEL	-	0.20	20/1	15	16	20/1	0.2	-	STORAGE ROOM LIGHTS	1
1	FILTER BASIN LIGHTS	1.40	-	20/1	17	18	20/1	**-**	**1**	**MAIN WWTP SCADA PANEL**	**1**
1	FILTER BASIN RECEPTACLES	-	1.98	20/1	19	20	20/1	0.25	-	SCADA SERVER RECEPTACLE	1
1	CHLORINE CONTACT BASIN FLOW METER	0.10	-	20/1	21	22	30/2	3.7	3.7	GENERATOR PANELBOARD	1
1	CHLORINE CONTACT BASIN LIGHTS	-	0.88	20/1	23	24					
1	CHLORINE CONTACT BASIN AUTO SAMPLER RECEPTACLE	0.25	-	20/1	25	26	20/1	-	0.38	BUILDING OUTSIDE LIGHTS	1
3	**SPARE** (OLD LIGHTING PANEL "CHEM" FEEDER)	-	-	60/2	27	28	20/1	1.8	-	STORAGE ROOM RECEPTACLES	1
					29	30	20/1	-	0.25	RAPID MIX BASIN HEAT TRACE RECEPTACLE	1
2	**AERATION BASIN AIT's**	**-**	**0.10**	20/1	31	32	20/1	0.75	-	LIFT STATION CONTROL PANEL RECEPTACLES, LIGHT & CONTROLS	1
1	LIGHTING CONTROL PANEL	0.50	-	20/1	33	34	20/1	-	0.5	LIFT STATION CONTROL PANEL HEATER, FAN, & CONTROLLER	1
1	LIGHTING PANEL "B"	5.09	5.09	100/2	35	36	20/1	**0.1**	-	**HEADWORKS LEVEL TRANSMITTERS (LIT-03-101 & LIT-03-301)**	**1, 2**
					37	38	20/1	-	1	ICE BOX	1
1, 2	**BLOWER LOCAL CONTROL PANELS**	**-**	**0.90**	**20/1**	39	40	20/1	0.25	-	GENERATOR BATTERY CHARGER	1
1	SHUNT TRIP	0.10	-	20/1	41	42	20/1	-	**1**	**LIFT STATION PLC LOCAL PANEL (CP-02-002)**	**2**
	TOTAL KVA	10.12	13.17	200A/2 POLE MAIN BREAKER BOTTOM ENTRY				10.21	9.90	TOTAL KVA	
	TOTAL LINE KVA	20.33	23.06	FED FROM EXIST 37.5 KVA TRANSFORMER				169.41	192.19	TOTAL LINE AMPS AT 120 VOLT	
	TOTAL CONNECTED KVA	43.39		with 3-#4/0 + #4/0 GND				180.80		TOTAL CONNECTED AMPS AT 240 VOLT	

NOTES:
1. EXISTING LOAD.
2. PROPOSED LOAD, SEE CONDUIT SCHEDULE FOR CONSUCTOR AND CONDUIT SIZE AND REQUIREMENTS.

NOTES:
3. EXISITNG LOAD TO BE REMOVED MARK BREAKER AS SPARE. DEMOLISH UNUSED CONDUCTORS, CONDUIT TO 6" BELOW GRADE, CAP CONDUIT AND ABANDON.

Exist Lighting Panel "CHEM", 100A BUS, 120/240 VOLT, 1-PHASE, 3-WIRE, 60 HZ, 10 KAIC, 100% RATED NEUTRAL, SURFACE MOUNTED, LOCATED AT CHEMICAL BUILDING, NEMA 4X S.S. ENCLOSURE

Notes:	CIRCUIT DESCRIPTION	LOAD KVA LINE 1	LOAD KVA LINE 2	AMP/POLE	CKT NO	CKT NO	AMP/POLE	LOAD KVA LINE 1	LOAD KVA LINE 2	CIRCUIT DESCRIPTION	Notes:
	SPARE	-	-	30/1	1	2	20/1	0.5	-	CHEMICAL CANOPY LIGHTS	1
1	ALUM TANK LIT's (LIT-11-101 & LIT-11-102)	-	0.1	20/1	3	4	**20/1**	**-**	**1**	**CHEMICAL SYSTEM PLC PANEL (CP-11-001)**	**2**
1	SODIUM BISULFITE TANK LIT's (LIT-11-201 & LIT-11-202)	0.1	-	20/1	5	6	20/1	-	-	SPARE	
1	ALUM PUMPS (PSP-11-101 & PSP-11-102)	-	0.3	20/1	7	8	20/1	-	0.3	SODIUM BISULFITE PUMPS (PSP-11-201 & PSP-11-202)	1
1	CHEMICAL AREA MISC RECEPTACLES	1	-	20/1	9	10	20/1	1.1	-	ALUM TANK HEAT TRACE SYSTEM	1
1	SODIUM HYPOCHLORITE PUMPS (PSP-11-301 & PSP-11-302)	-	0.3	20/1	11	12	20/1	-	0.42	**SODIUM BISULFITE TANK HEAT TRACE SYSTEM**	1
1	SODIUM HYYPOCHLORITE TANK LIT's (LIT-11-301 & LIT-11-302)	0.1	-	20/1	13	14	20/1	0.84	-	CHLORINE CONTACT BASIN HEAT TRACE SYSTEM	1
	SPARE	-	-	20/1	15	16	**20/2**	**1.8**	-	**EUH-11-001**	2
	SPARE	-	-	20/1	17	18		-	**1.8**		
	SPARE	-	-	20/1	19	20	20/1	-	-	SPARE	
	SPARE	-	-	20/1	21	22	20/1	-	-	SPARE	
1	EYEWASH STATION HEAT TRACING	-	0.15	20/1	23	24	20/1	-	-	SPARE	
	SPARE	-	-	20/1	25	26	20/1	-	-	SPARE	
	SPARE	-	-	20/1	27	28	20/1	-	-	SPARE	
	SPACE	-	-	-	29	30	-	-	-	SPACE	
	TOTAL KVA	1.20	0.85	60A/2 POLE MAIN BREAKER BOTTOM ENTRY FED				4.24	3.52	TOTAL KVA	
	TOTAL LINE KVA	5.44	4.37	FROM LIGHTING PANEL "A" with 3-#4 + #8 GND				45.33	36.42	TOTAL LINE AMPS AT 120 VOLT	
	TOTAL CONNECTED KVA	9.81						40.88		TOTAL CONNECTED AMPS AT 240 VOLT	

NOTES:
1. EXISTING LOAD
2. PROPOSED LOAD

NOTES:

(NOTE 4) NAMEPLATE: "LP-14-001", 225A BUS, 120/240 VOLT, 1-PHASE, 3-WIRE, 60 HZ, 10 KAIC, 100% RATED NEUTRAL, SURFACE MOUNTED, LOCATED AT DEWATERING ELECTRICAL ROOM, NEMA 1 ENCLOSURE

Notes	CIRCUIT DESCRIPTION	LOAD KVA LINE 1	LOAD KVA LINE 2	AMP/POLE	CKT NO	CKT NO	AMP/POLE	LOAD KVA LINE 1	LOAD KVA LINE 2	CIRCUIT DESCRIPTION	Notes
3	SURGE PROTECTION DEVICE	-	-	(Note 3)	1	2	20/1	0.70	-	DEWATERING BUILDING LIGHTS	1
					3	4	20/1	-	0.90	DEWATERING BUILDING RECEPTACLES	1
2	NPW SYSTEM FLOWMETER (FIT-10-001)	-	0.10	20/1	5	6	20/1	0.61	-	DEWATERING BUILDING OUTDOOR LIGHTS (24-HR TIME CLOCK)	1
2	SLUDGE TRAIN No. 1 & 2 FLOWMETERS (FIT-13-301 & FIT-13-302)	0.20	-	20/1	7	8	20/1	-	0.90	DEWATERING BUILDING OUTDOOR RECEPTACLES	1
2	WALL MOUNTED A/C UNIT (HVAC-14-001)	4.50	4.50	45/2	9	10	20/1	0.65	-	DEWATERING DUMPSTER AREA LIGHTS	1
					11	12	20/1	-	0.36	DEWATERING DUMPSTER AREA RECEPTACLES	1
2	SPACE HEATER (EUH-14-001)	2.50	2.50	30/2	13	14	20/1	0.30	-	ELECTRICAL ROOM LIGHTS	1
					15	16	20/1	-	0.90	ELECTRICAL ROOM RECEPTACLES	1
2	SPACE HEATER (EUH-14-002)	2.5	2.50	30/2	17	18	30/2	2.50	2.50	SPACE HEATER (EUH-14-003)	2
					19	20					
1	PLUG IN SPACE HEATER DESIGNATED RECEPTACLE	-	2.00	20/1	21	22	20/1	1.00	-	24 HR TIME CLOCK	1
	SPARE	-	-	20/1	23	24	20/1	-	0.50	PRESS FEED PUMP SPACE HEATERS	2
	SPARE	-	-	20/1	25	26	20/1	-	-	SPARE	
	SPARE	-	-	20/1	27	28	20/1	-	-	SPARE	
	SPARE	-	-	20/1	29	30	20/1	-	-	SPARE	
	SPARE	-	-	20/1	31	32	20/1	-	-	SPARE	
	SPARE	-	-	20/1	33	34	20/1	-	-	SPARE	
	SPARE	-	-	20/1	35	36	20/1	-	-	SPARE	
	SPARE	-	-	20/1	37	38	20/1	-	-	SPARE	
	SPARE	-	-	20/1	39	40	20/1	-	-	SPARE	
	SPARE	-	-	20/1	41	42	20/1	-	-	SPARE	
	TOTAL KVA	9.70	11.60	200A/2 MAIN BREAKER FED FROM 37.5 KVA TRANSFORMER (XFMR-14-001)				5.76	6.06	TOTAL KVA	
	TOTAL LINE KVA	15.46	17.66					128.83	147.17	TOTAL LINE AMPS AT 120 VOLT	
	TOTAL CONNECTED KVA	33.12						138.00		TOTAL CONNECTED AMPS AT 240 VOLT	

NOTES:
1. INSTALL 2-#12 + #12 GND, 1" CONDUIT.
2. SEE CONDUIT SCHEDULE FOR WIRE AND CONDUIT REQUIREMENTS.
3. PROVIDE INTEGRAL TYPE 2 SPD AS PER SECTION 16491. BREAKER SHALL BE SIZED PER MANUFACTURER RECCOMENDATION.

NOTES:
4. BOND #2 AWG THW GREEN WIRE FROM NEUTRAL BUS TO GROUND BUS. BOND GROUND BUS TO THE SYSTEM GROUND GRID WITH #2 BARE COPPER WIRE.
5. WIRE A MAXIMUM OF ONE DEDICATED RECEPTACLE PER BREAKER.

NO.	DATE	REVISIONS	APP.

WILBARGER CREEK M.U.D. No. 2
TRAVIS COUNTY, TEXAS

WASTEWATER TREATMENT PLANT EXPANSION TO 1.5 MGD

ELECTRICAL SCHEDULES – SHEET 2 OF 2

QUIDDITY
Texas Board of Professional Engineers and Land Surveyors Reg. No. F-23290
912 South Capital of Texas Hwy, Suite 300 • Austin, TX 78746 • 512.441.9493

SCALE: NONE
DATE: SEPTEMBER 2026
JOB NO. 0A651-0021-02
SUBMITTED:

DGN. BY: EFLORES
DWN. BY: SSOMERS
DWG. NO.
SURV. BY:
F.B. NO.

STATE OF TEXAS
BAO LE THIEN TRAN
149385
LICENSED PROFESSIONAL ENGINEER
09/22/2026

0-E-3
SHEET NO. 149 OF 230

C:\Users\JAS\DC\ACCDocs\Quiddity\0A651-0021-02 _ WILBARGER WWTP EXP. 1.5 MGD\Project Files\PLANS\ELEC.dwg, Feb 20, 2026 - 10:10am, JAS

0 1 2 3 4 5 ORIGINAL SCALE IN INCHES FOR REDUCED PLANS

WILBARGER WWTP - AREA No. 2 - LIFT STATION

Conduit Size & Wire No.			Size	Power	Ground	Control	Instrumentation	Description	Origin	Destination	Comments
480V											
02	P	101*	3"	VENDOR CABLE				LIFT PUMP No. 1 (SP-02-101) POWER FEEDER	EXIST LIFT PUMP No. 1 (SP-02-101) TERMINAL BOX	SP-02-101	
02	P	201*	3"	VENDOR CABLE				LIFT PUMP No. 2 (SP-02-201) POWER FEEDER	EXIST LIFT PUMP No. 2 (SP-02-201) TERMINAL BOX	SP-02-201	
02	P	301*	3"	VENDOR CABLE				LIFT PUMP No. 3 (SP-02-301) POWER FEEDER	EXIST LIFT PUMP No. 3 (SP-02-301) TERMINAL BOX	SP-02-301	
02	P	401*	3"	VENDOR CABLE				LIFT PUMP No. 4 (SP-02-401) POWER FEEDER	EXIST LIFT PUMP No. 4 (SP-02-401) TERMINAL BOX	SP-02-401	
120/240V											
02	P	200*	1"	2-#10	#12			LIFT STATION PLC LOCAL CONTROL PANEL (CP-02-002) POWER	LIGHTING PANEL "A" (LPA)	CP-02-002	
INSTRUMENTATION											
02	I	001*	2"				4 SETS-FLOAT CABLES	FLOAT SIGNALS	EXIST ACCESS HATCH	EXIST FLOATS TERMINAL BOX	
02	I	002*	2"				3 SETS-FLOAT CABLES + TRANSDUCER CABLE	FLOAT SIGNALS	EXIST ACCESS HATCH	EXIST TRANSDUCER TERMINAL BOX	
02	I	003	1"		#12	6-#14		FLOAT SIGNALS	EXIST TRANSDUCER TERMINAL BOX	EXIST FLOATS TERMINAL BOX	
02	I	004*	1"		#12	14-#14		FLOAT SIGNALS	EXIST LIFT STATION LOCAL CONTROL PANEL (CP-02-001)	EXIST FLOATS TERMINAL BOX	
02	I	005*	1"		#12	2-#14		PEAK SHAVING BASIN HIGH LEVEL LOCKOUT	PEAK SHAVING BASIN CONTROL PANEL (CP-04-001)	EXIST LIFT STATION LOCAL CONTROL PANEL (CP-02-001)	
02	I	006	1"		#12		1 - 1 PR #18 TSP	EXIST LEVEL TRANSMITTER (LIT-02-001) SIGNAL	LIFT STATION PLC LOCAL CONTROL PANEL (CP-02-002)	EXIST LIT-02-001	
02	I	007	2"		#12	90-#14		DISCRETE SIGNALS BETWEEN LIFT STATION LOCAL CONTROL PANELS	EXIST LIFT STATION LOCAL CONTROL PANEL (CP-02-001)	LIFT STATION PLC LOCAL CONTROL PANEL (CP-02-002)	4-#14 ARE SPARE
02	I	200*	1"				FIBER OPTIC	LIFT STATION PLC CONTROL PANEL (CP-02-002) FIBER OPTIC	LIFT STATION PLC LOCAL CONTROL PANEL (CP-02-002)	SCADA PANEL	
NOTES											
Note *: Existing Conduit with Proposed Conductors.											

WILBARGER WWTP - AREA No. 3 - HEADWORKS

Conduit Size & Wire No.			Size	Power	Ground	Control	Instrumentation	Description	Origin	Destination	Comments
480V											
03	P	101*	1"	3-#12	#12			WASH COMPACTOR (WC-03-101) POWER FEEDER	EXIST HEADWORKS CONTROL PANEL No. 1 (CP-03-001)	EXIST JUNCTION BOX	
03	P	102	1"	3-#12	#12			WASH COMPACTOR (WC-03-101) POWER FEEDER	EXIST JUNCTION BOX	WC-03-101	
03	P	200	1"	3-#10	#12			HEADWORKS CONTROL PANEL No. 2 (CP-03-002) POWER FEEDER	EXIST MOTOR CONTROL CENTER (MCC-12-001)	CP-03-002	VIA PULL BOX EPB-12-001
03	P	301	1"	3-#12	#12			MECHANICAL FINE SCREEN (MFS-03-301) POWER FEEDER	HEADWORKS CONTROL PANEL No. 2 (CP-03-002)	MFS-03-301	
03	P	302	1"	3-#12	#12			MECHANICAL FINE SCREEN BRUSH (MFS-03-302) POWER FEEDER	HEADWORKS CONTROL PANEL No. 2 (CP-03-002)	MFS-03-302	
03	P	400	1"	3-#12	#12			EXIST HEADWORKS NPW BOOSTER PUMP POWER FEEDER	EXIST HEADWORKS CONTROL PANEL No. 1 (CP-03-001)	EXIST HEADWORKS NPW BOOSTER PUMP	
03	P	501	1"	3-#10	#12			PLUG VALVE (PV-03-005) POWER FEEDER	EXIST MOTOR CONTROL CENTER (MCC-12-001)	PV-03-005	VIA PULL BOX EPB-12-001
03	P	601	1"	3-#10	#12			PLUG VALVE (PV-03-006) POWER FEEDER	EXIST MOTOR CONTROL CENTER (MCC-12-001)	PV-03-006	VIA PULL BOX EPB-12-001
120/240V											
03	P	001	1"	2-#10	#12			HEADWORKS LEVEL TRANSMITTER (LIT-03-301) POWER FEEDER	WALL MOUNTED ELECTRICAL PULL BOX (EPB-12-001)	LIT-03-301	LOCATED INSIDE CP-03-002
INSTRUMENTATION											
03	I	001	1"		#12	12-#14		DISCRETE SIGNALS BETWEEN HEADWORKS CONTROL PANELS No. 1 & 2	EXIST HEADWORKS CONTROL PANEL No. 1 (CP-03-001)	HEADWORKS CONTROL PANEL No. 2 (CP-03-002)	
03	I	002*	1"		2-#12	12-#14		EXIST HIGH LEVEL FLOAT (LSH-03-001) SIGNAL & LOCAL CONTROL STAION SIGNALS	EXIST HEADWORKS CONTROL PANEL No. 1 (CP-03-001)	EXIST JUNCTION BOX	
03	I	003	1"		#12	10-#14		LOCAL CONTROL STATION DISCRETE SIGNALS	EXIST JUNCTION BOX	LOCAL CONTROL STATION	
03	I	004*	1"		#12	2-#14		EXIST HIGH LEVEL FLOAT (LSH-03-001) SIGNAL	EXIST JUNCTION BOX	EXIST LSH-03-001	
03	I	005*	1"		#12	2-#14		EXIST SOLENOID VALVE (SV-03-101) CONTROL SIGNAL	EXIST HEADWORKS CONTROL PANEL No. 1 (CP-03-001)	EXIST JUNCTION BOX	
03	I	006*	1"		#12	2-#14		EXIST SOLENOID VALVE (SV-03-101) CONTROL SIGNAL	EXIST JUNCTION BOX	EXIST SV-03-101	
03	I	007	1"		#12		1 - 1 PR #18 TSP	HEADWORKS LEVEL TRANSMITTER (LIT-03-301) SIGNAL	HEADWORKS CONTROL PANEL No. 2 (CP-03-002)	TRANSDUCER JUNCTION BOX	
03	I	008	1"				TRANSDUCER CABLE	HEADWORKS UPSTREAM LEVEL ELEMENT (LE-03-301) SIGNAL	TRANSDUCER JUNCTION BOX	LE-03-301	
03	I	009	1"				TRANSDUCER CABLE	HEADWORKS DOWNSTREAM LEVEL ELEMENT (LE-03-302) SIGNAL	TRANSDUCER JUNCTION BOX	LE-03-302	
03	I	010	1"		#12	2-#14		SOLENOID VALVE (SV-03-302) CONTROL SIGNAL	HEADWORKS CONTROL PANEL No. 2 (CP-03-002)	SV-03-302	
03	I	011	1"		#12	2-#14		HEADWORKS WASH COMPACTOR E-STOP (PB-03-001) SIGNAL	HEADWORKS CONTROL PANEL No. 2 (CP-03-002)	PB-03-001	
03	I	012	1"		#12	2-#14		HEADWORKS FINE SCREEN E-STOP (PB-03-301) SIGNAL	HEADWORKS CONTROL PANEL No. 2 (CP-03-002)	PB-03-101	
03	I	013	1"		#12	2-#14		HEADWORKS HIGH LEVEL (LSH-03-301) SIGNAL	HEADWORKS CONTROL PANEL No. 2 (CP-03-002)	LSH-03-301	
03	I	014	1"		#12	2-#14		SOLENOID VALVE (SV-03-001) CONTROL SIGNAL	HEADWORKS CONTROL PANEL No. 2 (CP-03-002)	SV-03-001	
03	I	100*	1"				CAT 6 ETHERNET	EXIST HEADWORKS CONTROL PANEL No. 1 (CP-03-001) ETHERNET COMM.	EXIST HEADWORKS CONTROL PANEL No. 1 (CP-03-001)	SCADA PANEL	
03	I	200	1"				CAT 6 ETHERNET	HEADWORKS CONTROL PANEL No. 2 (CP-03-002) ETHERNET COMM.	HEADWORKS CONTROL PANEL No. 2 (CP-03-002)	WALL MOUNTED INSTRUMENTATION PULL BOX (IPB-12-001)	
03	I	501	1"		#12	6-#14		PLUG VALVE (PV-03-005) CONTROL SIGNAL	EXIST LIFT STATION LOCAL CONTROL PANEL (CP-02-001)	PV-03-005	2-#14 ARE SPARE
03	I	601	1"		#12	6-#14		PLUG VALVE (PV-03-006) CONTROL SIGNAL	EXIST LIFT STATION LOCAL CONTROL PANEL (CP-02-001)	PV-03-005	2-#14 ARE SPARE
NOTES											
Note *: Existing Conduit with Proposed Conductors.											

WILBARGER WWTP - AREA No. 4 - PEAK SHAVING BASIN

Conduit Size & Wire No.			Size	Power	Ground	Control	Instrumentation	Description	Origin	Destination	Comments
480V											
04	P	001*	1"	3-#1	#6			PEAK SHAVING BASIN CONTROL PANEL (CP-04-001) FEEDER	MCC-12-001	CP-04-001	
04	P	101*	1"	3-#10 + 2-#12	#12			EXIST PEAK SHAVING BASIN SLUDGE PUMP No. 1 POWER FEEDER	CP-04-001	EXIST PEAK SHAVING BASIN SLUDGE PUMP No. 1	
04	P	201*	1"	3-#10 + 2-#12	#12			EXIST PEAK SHAVING BASIN SLUDGE PUMP No. 2 POWER FEEDER	CP-04-001	EXIST PEAK SHAVING BASIN SLUDGE PUMP No. 2	
04	P	301	1"	3-#10 + 2-#12	#12			PEAK SHAVING BASIN SLUDGE PUMP No. 3 (SPP-04-301) POWER FEEDER	CP-04-001	SPP-04-301	
120/240V											
04	P	001	0.75"	2-#12	#12			PEAK SHAVING BASIN AND ELEVATED WALKWAY LIGHTING	EPB-04-001	ELEVATED WALKWAY STANCHION LIGHTS	
INSTRUMENTATION											
04	I	001*	1"				CAT 6 ETHERNET	PEAK SHAVING BASIN CONTROL PANEL (CP-04-001) SIGNALS	PEAK SHAVING BASIN CONTROL PANEL (CP-04-001)	SCADA PANEL	
04	I	002*	1"		#14	2-#14		PEAK SHAVING BASIN FLOAT SIGNALS	PEAK SHAVING BASIN CONTROL PANEL (CP-04-001)	PEAK SHAVING BASIN FLOAT TERMINAL PANEL	REPLACE 4 EXPLOSION PROOF SEALS.
NOTES											
Note *: Existing Conduit with Proposed Conductors.											

NO.	DATE	REVISIONS	APP.

WILBARGER CREEK M.U.D. No. 2
TRAVIS COUNTY, TEXAS

WASTEWATER TREATMENT PLANT
EXPANSION TO 1.5 MGD

CONDUIT SCHEDULE – SHEET 1 OF 6

QUIDDITY
Texas Board of Professional Engineers and Land Surveyors Reg. No. F-23290
912 South Capital of Texas Hwy, Suite 300 • Austin, TX 78746 • 512.441.9493

SCALE: NONE
DATE: SEPTEMBER 2026
JOB NO. 0A651-0021-02
SUBMITTED:
DGN. BY: EFLORES
DWN. BY: SSOMERS
DWG. NO.
SURV. BY:
F.B. NO.

STATE OF TEXAS
BAO LE THIEN TRAN
149385
LICENSED PROFESSIONAL ENGINEER
09/22/2026

0-E-4
SHEET NO. 150 OF 230

C:\Users\JAS\DC\ACCDocs\Quiddity\0A651-0021-02 _ WILBARGER WWTP EXP. 1.5 MGD\Project Files\PLANS\ELEC.dwg, Jul 01, 2026 – 11:05am, JAS

0 1 2 3 4 5 ORIGINAL SCALE IN INCHES FOR REDUCED PLANS

WILBARGER WWTP - AREA No. 5 - AERATION BASIN AND RAPID MIX BASIN

Conduit Size & Wire No.			Size	Power	Ground	Control	Instrumentation	Description	Origin	Destination	Comments
480V											
120/240V											
05	P	001	1"	4-#12	2-#12			AERATION BASIN No. 3 RAS AIR LIFT No. 1 & 2 FLOW METERS (FIT-05-301 & FIT-05-302) POWER FEEDER	EPB-12-001	FLOW METERS (FIT-05-301 & FIT-05-302)	VIA EPB-05-001
05	P	002	1"	4-#10	2-#12			AERATION BASIN No. 3 LIGHTS & RECEPTACLE POWER	EPB-12-001	AERATION BASIN No. 3 LIGHTS & RECEPTACLE	VIA EPB-05-001 & EPB-12-001
05	P	101	1"	2-#12	#12			AERATION BASIN No. 1 DO & MLSS (AIT-05-101) POWER FEEDER	EPB-12-001	DO & MLSS (AIT-05-101)	VIA EPB-05-001
05	P	201	1"	2-#12	#12			AERATION BASIN No. 2 DO & MLSS (AIT-05-201) POWER FEEDER	EPB-12-001	DO & MLSS (AIT-05-201)	VIA EPB-05-001
05	P	301	1"	2-#12	#12			AERATION BASIN No. 3 DO & MLSS (AIT-05-301) POWER FEEDER	EPB-12-001	DO & MLSS (AIT-05-301)	VIA EPB-05-001
INSTRUMENTATION											
05	I	001	1.5"		#14		6 - 1 PR#18 TSP	AERATION BASIN No. 1, 2, 3 DO & MLSS (AIT-05-101, AIT-05-201, AIT-05-301) SIGNALS	EPB-05-001	IPB-12-001	
05	I	002	1"		#14		2 - 1 PR#18 TSP	AERATION BASIN No. 3 RAS AIR LIFT No. 1 & 2 (FIT-05-301 & FIT-05-302) FLOW SIGNALS	FIT-05-301 & FIT-05-302	IPB-12-001	VIA EPB-05-001
05	I	101	1"		#14		2 - 1 PR#18 TSP	AERATION BASIN No. 3 DO & MLSS (AIT-05-301) SIGNALS	AIT-05-301	EPB-05-001	
05	I	201	1"		#14		2 - 1 PR#18 TSP	AERATION BASIN No. 3 DO & MLSS (AIT-05-301) SIGNALS	AIT-05-302	EPB-05-001	
05	I	301	1"		#14		2 - 1 PR#18 TSP	AERATION BASIN No. 3 DO & MLSS (AIT-05-301) SIGNALS	AIT-05-303	EPB-05-001	
NOTES											
Note *: Existing Conduit with Proposed Conductors.											

WILBARGER WWTP - AREA No. 6 - CLARIFIERS, WAS, & SCUM

Conduit Size & Wire No.			Size	Power	Ground	Control	Instrumentation	Description	Origin	Destination	Comments
480V											
06	P	300	1"	3-#12	#12			CLARIFIER No. 3 LOCAL CONTROL PANEL (CP-06-301) POWER FEEDER	EXIST MOTOR CONTROL CENTER (MCC-12-001)	CP-06-301	VIA PULL BOX EPB-12-001
06	P	301	1"	3-#12	#12			CLARIFIER No. 3 (SC-06-301) POWER FEEDER	CP-06-301	SC-06-301	
120/240V											
06	P	001	1"	8-#10	#12			LIGHTS AND RECEPTACLES POWER FEEDER	ELECTRICAL PULL BOX (EPB-12-001)	ELECTRICAL PULL BOX (PB-06-001)	
06	P	002	1"	4-#10	#12			CLARIFIER No. 3 LIGHTS AND RECEPTACLES POWER FEEDER	ELECTRICAL PULL BOX (PB-06-001)	CLARIFIER No. 3 LIGHTS AND RECEPTACLES	
06	P	003	1"	4-#10	#12			EFFLUENT BASIN & SCUM PIT LIGHTS AND RECEPTACLES POWER FEEDER	ELECTRICAL PULL BOX (PB-06-001)	EFFLUENT BASIN & SCUM PIT LIGHTS AND RECEPTACLES	
INSTRUMENTATION											
06	I	300	1"		#12	18-#14		CLARIFIER No. 3 LOCAL CONTROL PANEL (CP-06-301) SIGNALS	CP-06-301	SCADA PANEL	2-#14 ARE SPARE
06	I	301	1"		#12	4-#14		CLARIFIER No. 3 (SC-06-301) SIGNALS	SC-06-301	CP-06-301	
NOTES											
Note *: Existing Conduit with Proposed Conductors.											

WILBARGER WWTP - AREA No. 7 - TERTIARY FILTERS

Conduit Size & Wire No.			Size	Power	Ground	Control	Instrumentation	Description	Origin	Destination	Comments
480V											
120/240V											
INSTRUMENTATION											
07	I	101	1"	2-#12	#12	4-#14		BALL VALVE (BV-07-120) CONTROL SIGNALS	EXIST LOCAL CONTROL PANEL (CP-07-101)	BV-07-120 JUNCTION BOX	
07	I	102	1"				VENDOR CABLE	BALL VALVE (BV-07-120) CONTROL SIGNALS	BV-07-120 JUNCTION BOX	BV-07-120	
07	I	201	1"	2-#12	#12	4-#14		BALL VALVE (BV-07-220) CONTROL SIGNALS	EXIST LOCAL CONTROL PANEL (CP-07-101)	BV-07-220 JUNCTION BOX	
07	I	202	1"				VENDOR CABLE	BALL VALVE (BV-07-220) CONTROL SIGNALS	BV-07-220 JUNCTION BOX	BV-07-220	
NOTES											
Note *: Existing Conduit with Proposed Conductors.											

WILBARGER WWTP - AREA No. 8 - CHLORINE CONTACT BASIN

Conduit Size & Wire No.			Size	Power	Ground	Control	Instrumentation	Description	Origin	Destination	Comments
480V											
120/240V											
INSTRUMENTATION											
08	I	001*	1"		#14	2-#14		EXIST AUTO SAMPLER (AS-08-001) SIGNALS	EXIST SUTO SAMPLER (AS-08-001)	SCADA PANEL	
08	I	002*	1"				1 PR #18 TSP	PLANT EFFLUENT FLOW SIGNAL	EXIST CHLORINE CONTACT FIT-08-001	CHEMICAL SYSTEM PLC PANEL	
08	I	100*	1"		#14	18-#14		EXIST BLEACH MIXER CONTROL PANEL (CP-08-101) SIGNALS	EXIST BLEACH MIXER CONTROL PANEL (CP-08-101)	SCADA PANEL	
08	I	200*	1"		#14	18-#14		EXIST SODIUM BISULFITE MIXER CONTROL PANEL (CP-08-201) SIGNALS	EXIST SODIUM BISULFITE MIXER CONTROL PANEL (CP-08-201)	SCADA PANEL	
NOTES											
Note *: Existing Conduit with Proposed Conductors.											

NO.	DATE	REVISIONS	APP.

WILBARGER CREEK M.U.D. No. 2
TRAVIS COUNTY, TEXAS

WASTEWATER TREATMENT PLANT
EXPANSION TO 1.5 MGD

CONDUIT SCHEDULE
– SHEET 2 OF 6

QUIDDITY
Texas Board of Professional Engineers and Land Surveyors Reg. No. F-23290
912 South Capital of Texas Hwy, Suite 300 • Austin, TX 78746 • 512.441.9493

SCALE: NONE
DATE: SEPTEMBER 2026
JOB NO. 0A651–0021–02
SUBMITTED:
DGN. BY: EFLORES
DWN. BY: SSOMERS
DWG. NO.
SURV. BY:
F.B. NO.

STATE OF TEXAS
BAO LE THIEN TRAN
149385
LICENSED
PROFESSIONAL ENGINEER
09/22/2026

0–E–5
SHEET NO. 151 OF 230

C:\Users\JAS\DC\ACCDocs\Quiddity\0A651–0021–02 _ WILBARGER WWTP EXP. 1.5 MGD\Project Files\PLANS\ELEC.dwg, Jun 29, 2026 – 12:32pm, JAS

0 1 2 3 4 5 ORIGINAL SCALE IN INCHES FOR REDUCED PLANS

WILBARGER WWTP - AREA No. 9 - BLOWERS

Conduit Size & Wire No.			Size	Power	Ground	Control	Instrumentation	Description	Origin	Destination	Comments
480V											
09	P	601*	2"	3-#1	#6			BLOWER No. 6 (MSB-09-601) POWER FEEDER	EXIST MOTOR CONTROL CENTER (MCC-12-001)	DUCT BANK MARKER	
09	P	602	2"	3-#1	#6			BLOWER No. 6 (MSB-09-601) POWER FEEDER	DUCT BANK MARKER	BLOWER No. 6 (MSB-09-601)	
120/240V											
09	P	603*	1"	4-#12	#12			BLOWER No. 6 (MSB-09-601) LOCAL CONTROL PANEL & SPACE HEATER POWER	EXIST LIGHTING PANEL "A" (LPA)	DUCT BANK MARKER	
09	P	604	1"	4-#12	#12			BLOWER No. 6 (MSB-09-601) LOCAL CONTROL PANEL & SPACE HEATER POWER	DUCT BANK MARKER	BLOWER No. 6 (MSB-09-601) LOCAL CONTROL PANEL	
INSTRUMENTATION											
09	I	001*	1"		#12	2-#14		BLOWER HEADER LOW PRESSURE (PSL-09-003) SIGNALS	EXIST MOTOR CONTROL CENTER (MCC-12-001)	DUCT BANK MARKER	SEE AREA 12 CONDUIT SCHEDULE.
09	I	002	1"		#12	2-#14		BLOWER HEADER LOW PRESSURE (PSL-09-003) SIGNALS	DUCT BANK MARKER	PSL-09-003	
09	I	601*	1"		#12	8-#14		BLOWER No. 6 (MSB-09-601) LOCAL CONTROL PANEL SIGNALS	EXIST MOTOR CONTROL CENTER (MCC-12-001)	DUCT BANK MARKER	2-#14 ARE SPARE
09	I	602	1"		#12	8-#14		BLOWER No. 6 (MSB-09-601) LOCAL CONTROL PANEL SIGNALS	DUCT BANK MARKER	BLOWER No. 6 (MSB-09-601) LOCAL CONTROL PANEL	2-#14 ARE SPARE
NOTES											
Note *: Existing Conduit with Proposed Conductors.											

WILBARGER WWTP - AREA No. 10 - NON-POTABLE WATER

Conduit Size & Wire No.			Size	Power	Ground	Control	Instrumentation	Description	Origin	Destination	Comments
480V											
10	P	100	2"	3-#1	#6			NPW CONTROL PANEL (CP-10-001) POWER FEEDER	DEWATERING SWITCHBOARD (SW-14-001)	CP-10-001	
10	P	101	1"	3-#8 + 2-#12	#10	2-#14		NPW PUMP No. 1 (SPP-10-101) POWER FEEDER	NPW CONTROL PANEL (CP-10-001)	SPP-10-101	
10	P	201	1"	3-#8 + 2-#12	#10	2-#14		NPW PUMP No. 2 (SPP-10-201) POWER FEEDER	NPW CONTROL PANEL (CP-10-001)	SPP-10-201	
120/240V											
10	P	001	1"		#12	2-#10		NPW DISCHARGE FLOW METER (FIT-10-001) POWER	DEWATERING LIGHTIN PANEL (LP-14-001)	EXIST FIT-10-001	
INSTRUMENTATION											
10	I	001	1"		#12	4-#14		NPW LOW & HIGH PRESSURE SWITCH (PSL-10-001 & PSH-10-001) SIGNAL	NPW CONTROL PANEL (CP-10-001)	EXIST PSL-10-001 & PSH-10-001	CONTRACTOR TO USE CONDUIT BODIES AS NEEDED.
10	I	002	1"		#12		1 - 1 PR #18 TSP	NPW PRESSURE TRANSMITTER (PIT-10-001) SIGNAL	NPW CONTROL PANEL (CP-10-001)	PIT-10-001	
10	I	003	1"		#12	2-#14		CHLORINE CONTACT BASIN LOW LEVEL CUT OFF FLOAT (LSL-08-001) SIGNAL	NPW CONTROL PANEL (CP-10-001)	EXIST CCB LOW LEVEL FLOAT (LSL-08-001) STUB UP	
10	I	004 *	1"		#12	2-#14		CHLORINE CONTACT BASIN LOW LEVEL CUT OFF FLOAT (LSL-08-001) SIGNAL	EXIST CCB LOW LEVE FLOAT (LSL-08-001) STUB UP	LSL-08-001 TERMINAL BOX	TERMINATE NEW CONDUCTORS AT EXISTING TERMINAL BLOCKS.
10	I	005	1"		#12	2-#14		CHLORINE CONTACT BASIN LOW LEVEL LOCKOUT (HEADWORKS NPW BOOSTER PUMP)	NPW CONTROL PANEL (CP-10-001)	CP-03-002	
10	I	006	1"		#12	2-#14		CHLORINE CONTACT BASIN LOW LEVEL LOCKOUT (DEWATERING NPW BOOSTER PUMPS)	NPW CONTROL PANEL (CP-10-001)	CP-14B-001	
10	I	100	2"				FIBER OPTIC	NPW CONTROL PANEL (CP-10-001) FIBER OPTIC	NPW CONTROL PANEL (CP-10-001)	SCADA PANEL	
NOTES											
Note *: Existing Conduit with Proposed Conductors.											

NO.	DATE	REVISIONS	APP.

WILBARGER CREEK M.U.D. No. 2
TRAVIS COUNTY, TEXAS

WASTEWATER TREATMENT PLANT
EXPANSION TO 1.5 MGD

CONDUIT SCHEDULE
– SHEET 3 OF 6

QUIDDITY
Texas Board of Professional Engineers and Land Surveyors Reg. No. F-23290
912 South Capital of Texas Hwy, Suite 300 • Austin, TX 78746 • 512.441.9493

SCALE: NONE DGN. BY: EFLORES
DATE: SEPTEMBER 2026 DWN. BY: SSOMERS
JOB NO. 0A651-0021-02 DWG. NO.
SUBMITTED: SURV. BY:
F.B. NO.

STATE OF TEXAS
BAO LE THIEN TRAN
149385
LICENSED PROFESSIONAL ENGINEER
09/22/2026

0-E-6
SHEET NO. 152 OF 230

C:\Users\JAS\DC\ACCDocs\Quiddity\0A651-0021-02 _ WILBARGER WWTP EXP. 1.5 MGD\Project Files\PLANS\ELEC.dwg, Jul 01, 2026 – 2:06pm, JAS

0 1 2 3 4 5 ORIGINAL SCALE IN INCHES FOR REDUCED PLANS

WILBARGER WWTP - AREA No. 11 - CHEMICAL DISINFECTION SYSTEM

No.			Conduit Size & Wire: Size	Power	Ground	Control	Instrumentation	Description	Origin	Destination	Comments
								480V			
11	P	001	1"	3-#8	#10			CHEMICAL AREA DISTRIBUTION PANEL (DP-11-001) POWER FEEDER	EXIST MOTOR CONTROL CENTER No. 1 (MCC-12-001)	DP-11-001	VIA EPB-12-001
11	P	002	1"	3-#10	#12			10 KVA TRANSFORMER FEEDER	DP-11-001	XFMR-11-01	
11	P	003	1"	3-#4	#8			EXIST LIGHTING PANEL "CHEM" FEEDER	XFMR-11-01	EXIST LIGHTING PANEL "CHEM"	
11	P	004	1"	3-#12	#12			CHEMICAL FANS CONTROL PANEL POWER FEEDER	DP-11-001	CHEMICAL FANS CONTROL PANEL	
11	P	005A	1"	3-#12	#12			SUPPLY FAN No. 1 (SFAN-11-001) FEEDER	CHEMICAL FANS CONTROL PANEL	OUTDOOR MANUAL FAN SWITCH	
11	P	005B	1"	3-#12	#12			SUPPLY FAN No. 1 (SFAN-11-001) FEEDER	OUTDOOR MANUAL FAN SWITCH	SFAN-11-001	
11	P	006A	1"	3-#12	#12			SUPPLY FAN No. 2(SFAN-11-002) FEEDER	CHEMICAL FANS CONTROL PANEL	OUTDOOR MANUAL FAN SWITCH	
11	P	006B	1"	3-#12	#12			SUPPLY FAN No. 2 (SFAN-11-002) FEEDER	OUTDOOR MANUAL FAN SWITCH	SFAN-11-002	
								120/240V			
11	P	007	1"	2-#12	#12			CHEMICAL AREA CEILING LIGHTS POWER	EXIST LIGHTING PANEL "CHEM"	CHEMICAL AREA CEILING LIGHTS	
11	P	008A*	1"	2-#12	#12			CHEMICAL AREA CEILING OUTDOOR LIGHTS POWER	EXIST LIGHTING PANEL "CHEM"	CHEMICAL AREA OUTDOOR LIGHTS	
11	P	008B	1"	2-#12	#12			CHEMICAL AREA CEILING OUTDOOR LIGHTS POWER	EXIST LIGHTING PANEL "CHEM"	CHEMICAL AREA OUTDOOR LIGHTS	
11	P	009	1"	2-#12	#12			UNIT HEATER POWER	EXIST LIGHTING PANEL "CHEM"	UNIT HEATER DISCONNECT	
11	P	010	1"	2-#12	#12			UNIT HEATER POWER	UNIT HEATER DISCONNECT	EUH-11-001	
11	P	101*	1"	4-#12	2-#12			SODIUM HYPOCHLORITE LEVEL TRANSMITTERS (LIT-11A-101 & LIT-11A-201) POWER	EXIST LIGHTING PANEL "CHEM"	SODIUM HYPOCHLORITE LEVEL TRANSMITTERS (LIT-11A-101 & LIT-11A-201)	
11	P	102	1"	2-#12	#12			SODIUM HYPOCHLORITE METERING PUMP SKID (PSP-11A-101 & PSP-11A-201) POWER	EXIST LIGHTING PANEL "CHEM"	SODIUM HYPOCHLORITE METERING PUMP SKID (PSP-11A-101 & PSP-11A-201)	
11	P	201	1"	4-#12	2-#12			SODIUM BISULFITE LEVEL TRANSMITTERS (LIT-11B-101 & LIT-11B-201) POWER	EXIST LIGHTING PANEL "CHEM"	SODIUM BISULFITE LEVEL TRANSMITTERS (LIT-11B-101 & LIT-11B-201)	
11	P	202	1"	2-#12	#12			SODIUM BISULFITE METERING PUMP SKID (PSP-11B-101 & PSP-11B-201) POWER	EXIST LIGHTING PANEL "CHEM"	SODIUM BISULFITE METERING PUMP SKID (PSP-11B-101 & PSP-11B-201)	VIA EPB-11-002
11	P	203	1"	4-#10	#12			SODIUM BISULFITE TANKS (SWT-11B-101 & SWT-11B-201) HEAT TRACE POWER	EXIST HEAT TRACE PANEL	EPB-11-002	WIRE CONT'D AT 11-P-204 & 11-P-205
11	P	204	1"	4-#10	#12			SODIUM BISULFITE TANK NO. 1 (SWT-11B-101) HEAT TRACE POWER	EPB-11-002	SODIUM BISULFITE TANK NO. 1 (SWT-11B-101) HEAT TRACE CONTROLLER	
11	P	205	1"	4-#10	#12			SODIUM BISULFITE TANK NO. 2 (SWT-11B-201) HEAT TRACE POWER	EPB-11-002	SODIUM BISULFITE TANK NO. 2 (SWT-11B-201) HEAT TRACE CONTROLLER	
11	P	301*	1"	4-#12	2-#12			EXIST ALUM LEVEL TRANSMITTERS (LIT-11C-101 & LIT-11C-201) POWER	EXIST LIGHTING PANEL "CHEM"	EXIST ALUM LEVEL TRANSMITTERS (LIT-11C-101 & LIT-11C-201)	
11	P	302*	1"	2-#12	#12			ALUM LEVEL TRANSMITTERS (LIT-11C-301) POWER	EXIST LIGHTING PANEL "CHEM"	ALUM LEVEL TRANSMITTERS (LIT-11C-301)	
11	P	303*	1"	2-#12	#12			ALUM METERING PUMP (PSP-11C-301) POWER	EXIST LIGHTING PANEL "CHEM"	EPB-11-001	WIRE CONT'D AT 11-P-304
11	P	304	1"	2-#12	#12			ALUM METERING PUMP (PSP-11C-301) POWER	EPB-11-001	ALUM METERING PUMP (PSP-11C-301)	
								INSTRUMENTATION			
11	I	101*	1"				2-1 PR#16 TSP	SODIUM HYPOCHLORITE LEVEL TRANSMITTERS (LIT-11A-101 & LIT-11A-201) SIGNAL	CHEMICAL SYSTEM PLC PANEL	SODIUM HYPOCHLORITE LEVEL TRANSMITTERS (LIT-11A-101 & LIT-11A-201)	
11	I	102A	1"				2-1 PR#16 TSP	SODIUM HYPOCHLORITE LEVEL TRANSMITTERS (LIT-11A-101 & LIT-11A-201) SIGNAL	SODIUM HYPOCHLORITE LEVEL TRANSMITTERS (LIT-11A-101 & LIT-11A-201)	TERMINAL BOX (TB-11A-001)	
11	I	102B	1"				MFR. CABLE	SODIUM HYPOCHLORITE LEVEL TRANSMITTERS NO. 1 (LIT-11A-101) SIGNAL	TERMINAL BOX (TB-11A-001)	SODIUM HYPOCHLORITE LEVEL TRANSDUCER NO. 1 (LE-11A-101)	TERMINATE INTO TERMINAL BLOCKS. WIRE CONT'D AT 11-I-102A
11	I	102C	1"				MFR. CABLE	SODIUM HYPOCHLORITE LEVEL TRANSMITTERS NO. 2 (LIT-11A-201) SIGNAL	TERMINAL BOX (TB-11A-001)	SODIUM HYPOCHLORITE LEVEL TRANSDUCER NO. 2 (LE-11A-201)	TERMINATE INTO TERMINAL BLOCKS. WIRE CONT'D AT 11-I-102A
11	I	103	1.5"		#14	20-#14		SODIUM HYPOCHLORITE PUMP No. 1 & 2 (PSP-11A-101 & PSP-11A-201), PS-11A-101, & PS-11A-201 DISCRETE SIGNALS	CHEMICAL SYSTEM PLC PANEL	SODIUM HYPOCHLORITE PUMP No. 1 & 2 (PSP-11A-101 & PSP-11A-201), PS-11A-101, & PS-11A-201	VIA EXISTING SKID JUNCTION BOX
11	I	104	1"				2-1 PR#16 TSP	SODIUM HYPOCHLORITE PUMP No. 1 & 2 (PSP-11A-101 & PSP-11A-201) ANALOG SIGNALS	CHEMICAL SYSTEM PLC PANEL	SODIUM HYPOCHLORITE PUMP (PSP-11A-101 & PS-11A-101)	VIA EXISTING SKID JUNCTION BOX
11	I	105	1"		#14	2-#14		SODIUM HYPOCHLORITE TANK FILL AREA HIGH LEVEL BEACON	CHEMICAL SYSTEM PLC PANEL	SODIUM HYPOCHLORITE TANK FILL AREA HIGH LEVEL BEACON	
11	I	201	1"				2-1 PR#16 TSP	SODIUM BISULFITE LEVEL TRANSMITTERS (LIT-11B-101 & LIT-11B-201) SIGNAL	SODIUM BISULFITE LEVEL TRANSMITTERS (LIT-11B-101 & LIT-11B-201)	CHEMICAL SYSTEM PLC PANEL	
11	I	202A	1"				2-1 PR#16 TSP	SODIUM BISULFITE LEVEL TRANSMITTERS (LIT-11B-101 & LIT-11B-201) SIGNAL	SODIUM BISULFITE LEVEL TRANSMITTERS (LIT-11B-101 & LIT-11B-201)	TERMINAL BOX (TB-11B-001)	VIA EPB-11-002
11	I	202B	1"				MFR. CABLE	SODIUM BISULFITE LEVEL TRANSDUCERS NO. 1 (LIT-11B-101) SIGNAL	TERMINAL BOX (TB-11B-001)	SODIUM BISULFITE LEVEL TRANSDUCER NO. 1 (LIT-11B-101)	TERMINATE INTO TERMINAL BLOCKS. WIRE CONT'D AT 11-I-202A
11	I	202C	1"				MFR. CABLE	SODIUM BISULFITE LEVEL TRANSDUCERS NO. 2 (LIT-11B-201) SIGNAL	TERMINAL BOX (TB-11B-001)	SODIUM BISULFITE LEVEL TRANSDUCER NO. 2 (LIT-11B-201)	TERMINATE INTO TERMINAL BLOCKS. WIRE CONT'D AT 11-I-202A
11	I	203	1.5"		#14	20-#14		SODIUM BISULFITE PUMP No. 1 & 2 (PSP-11B-101 & PSP-11B-201), PS-11B-101, & PS-11B-201 DISCRETE SIGNALS	EPB-11-002	SODIUM BISULFITE PUMP No. 1 & 2 (PSP-11B-101 & PSP-11B-201), PS-11B-101, & PS-11B-201	VIA EXISTING SKID JUNCTION BOX
11	I	204	1"				2-1 PR#16 TSP	SODIUM BISULFITE PUMP No. 1 & 2 (PSP-11B-101 & PSP-11B-201) ANALOG SIGNAL	EPB-11-002	SODIUM BISULFITE PUMP (PSP-11B-201) & PSH-11B-201	VIA EXISTING SKID JUNCTION BOX
11	I	205	1"		#14	2-#14		SODIUM BISULFITE TANK FILL AREA HIGH LEVEL BEACON	CHEMICAL SYSTEM PLC PANEL	SODIUM BISULFITE TANK FILL AREA HIGH LEVEL BEACON	
11	I	301*	1"				2-1 PR#16 TSP	ALUM LEVEL TRANSMITTERS (LIT-11C-101 & LIT-11C-201) SIGNAL	CHEMICAL SYSTEM PLC PANEL	ALUM TANK NO. 1 & 2 LEVEL TRANSMITTERS (LIT-11C-101 & LIT-11C-201)	
11	I	302A	1"				2-MFR. CABLE	ALUM LEVEL TRANSDUCER (LIT-11C-101 & LIT-11C-201) SIGNAL	ALUM TANK No. 1 & 2 LEVEL TRANSMITTERS (LIT-11C-101 & LIT-11C-201)	TERMINAL BOX (TB-11C-001)	
11	I	302B	1"				MFR. CABLE	ALUM LEVEL TRANSDUCER NO. 1 (LIT-11C-101) SIGNAL	TERMINAL BOX (TB-11C-001)	ALUM TANK NO. 1 LEVEL TRANSDUCERS (LE-11C-101)	TERMINATE INTO TERMINAL BLOCKS. WIRE CONT'D AT 11-I-302A
11	I	302C	1"				MFR. CABLE	ALUM LEVEL TRANSDUCER NO. 2 (LIT-11C-201) SIGNAL	TERMINAL BOX (TB-11C-001)	ALUM TANK NO. 2 LEVEL TRANSDUCERS (LE-11C-201)	TERMINATE INTO TERMINAL BLOCKS. WIRE CONT'D AT 11-I-302A
11	I	303*	1"				1-1 PR#16 TSP	ALUM LEVEL TRANSMITTERS (LIT-11C-301) SIGNAL	CHEMICAL SYSTEM PLC PANEL	ALUM TANK NO. 3 LEVEL TRANSMITTERS (LIT-11C-301)	
11	I	304	1"				MFR. CABLE	ALUM LEVEL TRANSDUCER (LE-11C-301) SIGNAL	ALUM TANK NO. 3 LEVEL TRANSMITTERS (LIT-11C-301)	ALUM TANK NO. 3 LEVEL TRANSDUCER (LE-11C-301)	
11	I	305	1.5"		#14	8-#14		ALUM PUMP (PSP-11C-301) & PS-11C-301 DISCRETE SIGNAL	EPB-11-001	ALUM PUMP (PSP-11C-301) & PSH-11C-301	
11	I	306	1.5"				2-1 PR#16 TSP	ALUM PUMP (PSP-11C-301) ANALOG SIGNAL	CHEMICAL SYSTEM PLC PANEL	ALUM PUMP (PSP-11C-301) & PSH-11C-301	
11	I	307	1.5"		#14	8-#14		ALUM PUMP PS-11C-101 & PS-11C-201 DISCRETE SIGNAL	EPB-11-001	ALUM PUMP PS-11C-101 & PS-11C-201	
11	I	308	1"		#14	2-#14		ALUM TANK NO. 1 & 2 FILL AREA HIGH LEVEL BEACON	CHEMICAL SYSTEM PLC PANEL	ALUM TANK NO. 1 & 2 FILL AREA HIGH LEVEL BEACON	
11	I	309	1"		#14	2-#14		ALUM TANK NO. 3 FILL AREA HIGH LEVEL BEACON	CHEMICAL SYSTEM PLC PANEL	ALUM TANK NO. 3 FILL AREA HIGH LEVEL BEACON	
11	I	001	1"		#14	24-#14		SODIUM BISULFITE DISCRETE SIGNALS	CHEMICAL SYSTEM PLC PANEL	EPB-11-002	WIRE CONT'D AT 11-I-203, 11-I-005, & 11-I-008
11	I	002	1"				2-1 PR#16 TSP	SODIUM BISULFITE ANALOG SIGNALS	CHEMICAL SYSTEM PLC PANEL	EPB-11-002	WIRE CONT'D AT 11-I-204
11	I	003*	1"		#14	22-#14		ALUM DISCRETE SIGNALS	CHEMICAL SYSTEM PLC PANEL	EPB-11-001	WIRE CONT'D AT 11-I-305, 11-I-307, 11-I-006, 11-I-009 & 11-I-010
11	I	004	1"		#14	2-#14		EYEWASH STATION FLOW (FS-11A-001) SIGNAL	CHEMICAL SYSTEM PLC PANEL	EYEWASH STATION (EWS-11A-001)	
11	I	005	1"		#14	2-#14		EYEWASH STATION FLOW (FS-11B-001) SIGNAL	EPB-11-002	EYEWASH STATION (EWS-11B-001)	
11	I	006	1"		#14	2-#14		EYEWASH STATION FLOW (FS-11C-001) SIGNAL	EPB-11-001	EYEWASH STATIONS (EWS-11C-101 & EWS-11C-201)	
11	I	007	1"		#14	2-#14		LEAK DETECTION LEVEL SWITCH (LSL-11A-001) SIGNAL	CHEMICAL SYSTEM PLC PANEL	LEAK DETECTION LEVEL SWITCH (LSL-11A-001)	VIA LOCAL TERMINAL BOX
11	I	008	1"		#14	2-#14		LEAK DETECTION LEVEL SWITCH (LSL-11B-001) SIGNAL	EPB-11-002	LEAK DETECTION LEVEL SWITCH (LSL-11B-001)	VIA LOCAL TERMINAL BOX
11	I	009	1"		#14	2-#14		LEAK DETECTION LEVEL SWITCH (LSL-11C-001) SIGNAL	EPB-11-001	LEAK DETECTION LEVEL SWITCH (LSL-11C-001)	VIA LOCAL TERMINAL BOX
11	I	010	1"		#14	2-#14		LEAK DETECTION LEVEL SWITCH (LSL-11C-002) SIGNAL	EPB-11-001	LEAK DETECTION LEVEL SWITCH (LSL-11C-002)	VIA LOCAL TERMINAL BOX
11	I	011	1"		#14		FIBER OPTIC CABLE	CHEMICAL SYSTEM PLC COMMUNICATION	CHEMICAL SYSTEM PLC PANEL	IPB-12-001	
11	I	012*	1"		#14		1-1 PR#16 TSP	PLANT EFFLUENT FLOW SIGNAL	CHEMICAL SYSTEM PLC PANEL	CHLORINE CONTACT BASIN SYSTEM CONTROL PANEL	
11	I	013	1"		#14		1-1 PR#16 TSP	NPW EFFLUENT FLOW SIGNAL	CHEMICAL SYSTEM PLC PANEL	EXIST FIT-10-001	
11	I	014	1"		#14	4-#14		SUPPLY FAN SIGNALS	CHEMICAL SYSTEM PLC PANEL	CHEMICAL FANS CONTROL PANEL	
								NOTES			

Note *: Existing Conduit with Proposed Conductors.

NO.	DATE	REVISIONS	APP.

WILBARGER CREEK M.U.D. No. 2
TRAVIS COUNTY, TEXAS

WASTEWATER TREATMENT PLANT EXPANSION TO 1.5 MGD

CONDUIT SCHEDULE – SHEET 4 OF 6

QUIDDITY
Texas Board of Professional Engineers and Land Surveyors Reg. No. F-23290
912 South Capital of Texas Hwy, Suite 300 • Austin, TX 78746 • 512.441.9493

SCALE: NONE
DATE: SEPTEMBER 2026
JOB NO. 0A651-0021-02
SUBMITTED:
DGN. BY: EFLORES
DWN. BY: SSOMERS
DWG. NO.
SURV. BY:
F.B. NO.

STATE OF TEXAS
BAO LE THIEN TRAN
149385
LICENSED PROFESSIONAL ENGINEER
09/22/2026

0-E-7
SHEET NO. 153 OF 230

C:\Users\JAS\DC\ACCDocs\Quiddity\0A651-0021-02 _ WILBARGER WWTP EXP. 1.5 MGD\Project Files\PLANS\ELEC.dwg, Jul 01, 2026 - 2:07pm, JAS

0 1 2 3 4 5 ORIGINAL SCALE IN INCHES FOR REDUCED PLANS

WILBARGER WWTP - AREA No. 12 - ELECTRICAL BUILDING

No.			Conduit Size & Wire: Size	Power	Ground	Control	Instrumentation	Description	Origin	Destination	Comments
480V											
120/240V											
12	P	001*	1"	12-#12	#12			LIGHTING CONTROL PANEL POWER FEEDER	EXIST LIGHTING PANEL "A"	NEMA 1 WIREWAY	
12	P	002	1"	12-#12	#12			LIGHTING CONTROL PANEL POWER FEEDER	NEMA 1 WIREWAY	LIGHTING CONTROL PANEL TERMINAL BOX	
12	P	003	1"	12-#12	#12			LIGHTING CONTROL PANEL POWER FEEDER	LIGHTING CONTROL PANEL TERMINAL BOX	EXIST LIGHTING CONTROL PANEL	
12	P	004*	1"	EXIST	EXIST			WWTP LIGHTS POWER FEEDER	WWTP LIGHTS	NEMA 1 WIREWAY	
12	P	005	1"	***	***			WWTP LIGHTS POWER FEEDER	NEMA 1 WIREWAY	LIGHTING CONTROL PANEL TERMINAL BOX	
12	P	006	1"	***	***			WWTP LIGHTS POWER FEEDER	LIGHTING CONTROL PANEL TERMINAL BOX	EXIST LIGHTING CONTROL PANEL	
12	P	007*	1"	***	***			WWTP LIGHTS POWER FEEDER	EXIST LIGHTING CONTROL PANEL	EXIST BUILDING LIGHTS	EXTEND EXISTING CONDUIT AS NEEDED TO TERMINATE AT LIGHTING CONTROL PANEL
12	P	008	2"	12-#10 + 16-#12	11-#12			CONSOLIDATED MISC. FIELD POWER FEEDERS	EXIST LIGHTING PANEL "A"	ELECTRICAL PULL BOX (EPB-12-001)	
12	P	009	1"	2-#12	#12			RELOCATED RECEPTACLE POWER FEEDER	EXIST LIGHTING PANEL "A"	RELOCATED RECEPTACLE	EXTEND EXISTING CONDUIT AS NEEDED TO WIRE RELOCATED RECEPTACLE.
12	P	010	1"	2-#12	#12			COMMUNICATION SWITCH (ESW-12-001) POWER FEEDER	EXIST LIGHTING PANEL "A"	EXIST MOTOR CONTROL CENTER (MCC-12-001)	
12	P	011	1"	2-#10	#12			AERATION BASIN No. 3 LIGHTS POWER FEEDER	EXIST LIGHTING CONTROL PANEL	EPB-12-001	
12	P	100*	1"	2-#10	#12			SCADA PANEL POWER FEEDER	EXIST LIGHTING PANEL "A"	SCADA PANEL TERMINAL ENCLOSURE (OLD SCADA PANEL)	
12	P	101	1"	2-#12	#12			SCADA PANEL POWER FEEDER	SCADA PANEL TERMINAL ENCLOSURE (OLD SCADA PANEL)	SCADA PANEL	VIA EXIST AND PROPOSED NEMA 1 WIREWAYS
INSTRUMENTATION											
12	I	001	1"				CAT 6 ETHERNET	POWER METER SIGNAL	EXIST AUTOMATIC TRANSFER SWITCH	EXIST MOTOR CONTROL CENTER (MCC-12-001)	ROUTE TO ESW-12-001 SECTION
12	I	100	2"		#12	76-#14		SCADA PANEL EXISTING SIGNAL	SCADA PANEL TERMINAL ENCLOSURE (OLD SCADA PANEL)	SCADA PANEL	VIA EXIST AND PROPOSED NEMA 1 WIREWAYS
12	I	101	1"					SPARE (SCADA PANEL EXISTING SIGNAL)	SCADA PANEL TERMINAL ENCLOSURE (OLD SCADA PANEL)	SCADA PANEL	VIA EXIST AND PROPOSED NEMA 1 WIREWAYS
12	I	103	1"		3-#12	22-#14		CONSOLIDATED SCADA PANEL DISCRETE SIGNALS	SCADA PANEL	INSTRUMENTATION PULL BOX (IPB-12-001)	
12	I	104	2"		3-#12		6 - 1 PR #18 TSP	CONSOLIDATED SCADA PANEL ANALOG SIGNALS	SCADA PANEL	INSTRUMENTATION PULL BOX (IPB-12-001)	
12	I	105	2"				2 - CAT 6 ETHERNET	CONSOLIDATED SCADA PANEL ETHERNET	SCADA PANEL	INSTRUMENTATION PULL BOX (IPB-12-001)	
12	I	106	1"				FIBER OPTIC CABLE	SCADA PANEL FIBER	SCADA PANEL	INSTRUMENTATION PULL BOX (IPB-12-001)	
12	I	601	1"		#12	16-#14		BLOWER No. 6 (MSB-09-601) ALARMS & LOW PRESSURE SIGNAL (PSL-09-003)	EXIST MOTOR CONTROL CENTER (MCC-12-001)	SCADA PANEL	2-#14 ARE SPARE
NOTES											
Note *: Existing Conduit with Proposed Conductors.											
Note ***: Contractor shall field verify and provide all the required conductors to feed the existing light loads.											

WILBARGER WWTP - AREA No. 13 - SLUDGE HOLDING TANK

No.			Conduit Size & Wire: Size	Power	Ground	Control	Instrumentation	Description	Origin	Destination	Comments
480V											
120/240V											
13	P	001	1"	4-#12	2-#12			TRAIN No. 3 FLOW METER No. 1 & 2 (FIT-13-301 & FIT-13-302) POWER FEEDER	DEWATERING LIGHTING PANEL (LP-14-001)	FIT-13-301 & FIT-13-302	USE CONDUIT BODIES AS NEEDED
INSTRUMENTATION											
13	I	001	1"		#14	8-#14		AIR LIFT VALVE BYPASS PANEL (CP-13-101) SIGNALS	AIR LIFT VALVE BYPASS PANEL (CP-13-101)	IPB-12-001	
13	I	002	1"		#14	4-#14		SLUDGE HOLDING TANK LOW LEVEL CUT-OFF (LSL-13-001 & LSL-13-002) SIGNALS	EPB-13-001	VOLUTE PRESS CONTROL PANEL (CP-14D-101)	USE CONDUIT BODIES AS NEEDED. CONTINUED AT TAG 13-I-003 & 13-I-005
13	I	003	1"		#14	2-#14		SLUDGE HOLDING TANK LOW LEVEL CUT-OFF LSL-13-001 SIGNAL	EPB-13-001	LSL-13-001 TERMINAL BOX	
13	I	004					MFR. CABLE	SLUDGE HOLDING TANK LOW LEVEL CUT-OFF LSL-13-001 SIGNAL	LSL-13-002	LSL-13-001 TERMINAL BOX	
13	I	005	1"		#14	2-#14		SLUDGE HOLDING TANK LOW LEVEL CUT-OFF LSL-13-002 SIGNAL	EPB-13-001	LSL-13-002 TERMINAL BOX	
13	I	006	1"				MFR. CABLE	SLUDGE HOLDING TANK LOW LEVEL CUT-OFF LSL-13-002 SIGNAL	LSL-13-002	LSL-13-002 TERMINAL BOX	
13	I	007	1"		#14	4-#14		SOLENOID VALVE SIGNALS	AIR LIFT VALVE BYPASS PANEL (CP-13-101)	EPB-13-001	
13	I	008	1"		#14	4-#14		SOLENOID VALVE SV-13-301 & SV-13-302 SIGNALS	SOLENOID VALVES SV-13-301 & SV-13-302	EPB-13-001	
13	I	009	1"		#14	8-#14		SOLENOID VALVE SV-13-102, SV-13-202, SV-13-301 & SV-13-302 SIGNALS	SOLENOID VALVE SV-13-102, SV-13-202, SV-13-301 & SV-13-302	EPB-13-001	
13	I	301	1"		#14		2-1 PR#16 TSP	TRAIN No. 3 FLOW METER No. 1 & No. 2 (FIT-13-301 & FIT-13-302) SIGNALS	TRAIN No. 3 FLOW METER No. 1 (FIT-13-301) & FLOW METER No. 2 (FIT-13-302)	IPB-12-001	USE CONDUIT BODIES AS NEEDED
NOTES											
Note *: Existing Conduit with Proposed Conductors.											

NO.	DATE	REVISIONS	APP.

WILBARGER CREEK M.U.D. No. 2
TRAVIS COUNTY, TEXAS

WASTEWATER TREATMENT PLANT
EXPANSION TO 1.5 MGD

CONDUIT SCHEDULE
– SHEET 5 OF 6

QUIDDITY
Texas Board of Professional Engineers and Land Surveyors Reg. No. F-23290
912 South Capital of Texas Hwy, Suite 300 • Austin, TX 78746 • 512.441.9493

SCALE: NONE DGN. BY: EFLORES
DATE: SEPTEMBER 2026 DWN. BY: SSOMERS
JOB NO. 0A651-0021-02 DWG. NO.
SUBMITTED: SURV. BY:
F.B. NO.

STATE OF TEXAS
BAO LE THIEN TRAN
149385
LICENSED PROFESSIONAL ENGINEER
09/22/2026

0-E-8
SHEET NO. 154 OF 230

C:\Users\cgular\DC\ACCDocs\Quiddity – Water–\0A651-0021-02 _ WILBARGER WWTP EXP. 1.5 MGD\Project Files\PLANS\ELEC.dwg, Feb 18, 2026 – 6:00pm, cgular

0 1 2 3 4 5 ORIGINAL SCALE IN INCHES FOR REDUCED PLANS

WILBARGER WWTP - AREA No. 14 - DEWATERING FACILITY

No.			Conduit Size & Wire Size	Power	Ground	Control	Instrumentation	Description	Origin	Destination	Comments
								480V			
14	P	001	2.5"	3-350 KCMIL	#3			SWITCHBOARD No. 1 (SW-14-001) POWER FEEDER	EXIST MOTOR CONTROL CENTER No. 1 (MCC-12-001)	SW-14-001	
14	P	100	1.5"	3-#1/0	#6			VOLUTE PRESS CONTROL PANEL (CP-14D-101) POWER FEEDER	SW-14-001	CP-14D-101	
14	P	101	1"	3-#12	#12			FLOCCULATION MIXER No. 1 (FCT-14D-101) POWER FEEDER	CP-14D-101	FCT-14D-101	
14	P	102	1"	3-#12	#12			FLOCCULATION MIXER No. 2 (FCT-14D-102) POWER FEEDER	CP-14D-101	FCT-14D-102	
14	P	103	1"	3-#12	#12			FLASH MIXER (FCT-14D-103) POWER FEEDER	CP-14D-101	FCT-14D-103	
14	P	104	1"	3-#12	#12			VOLUTE PRESS MOTOR No. 1 (VP-14D-101A) POWER FEEDER	CP-14D-101	VP-14D-101A	
14	P	105	1"	3-#12	#12			VOLUTE PRESS MOTOR No. 2 (VP-14D-101B) POWER FEEDER	CP-14D-101	VP-14D-101B	
14	P	106	1"	3-#12	#12			VOLUTE PRESS MOTOR No. 3 (VP-14D-101C) POWER FEEDER	CP-14D-101	VP-14D-101C	
14	P	107	1"	3-#12	#12			VOLUTE PRESS MOTOR No. 4 (VP-14D-101D) POWER FEEDER	CP-14D-101	VP-14D-101D	
14	P	108	1"	3-#12	#12			VOLUTE PRESS MOTOR No. 5 (VP-14D-101E) POWER FEEDER	CP-14D-101	VP-14D-101E	
14	P	109	1"	3-#12	#12			VOLUTE PRESS MOTOR No. 6 (VP-14D-101F) POWER FEEDER	CP-14D-101	VP-14D-101F	
14	P	110	1"	3-#12	#12			VOLUTE PRESS CONVEYOR MOTOR No. 1 (SCC-14D-101) POWER FEEDER	CP-14D-101	SCC-14D-101	
14	P	111	1"	3-#12	#12			VOLUTE PRESS CONVEYOR MOTOR No. 2 (SCC-14D-102) POWER FEEDER	CP-14D-101	SCC-14D-102	
14	P	112	1"	5-#10	#12			PRESS FEED PUMP No. 1 (DDP-14A-101) POWER FEEDER	CP-14D-001 & LP-14-001	DDP-14A-101	VIA PUMP NO. 1 DISCONNECT SWITCH (2-#10 FOR SPACE HEATER POWER)
14	P	113	1"	5-#10	#12			PRESS FEED PUMP No. 2 (DDP-14A-201) POWER FEEDER	CP-14D-001 & LP-14-001	DDP-14A-201	VIA PUMP NO. 2 DISCONNECT SWITCH (2-#10 FOR SPACE HEATER POWER)
14	P	114	1"	3-#12	#12			(PBU-14C-101) POWER FEEDER	CP-14D-001	PBU-14C-101	
14	P	115	1"	3-#12	#12			(MXR-14C-101) POWER FEEDER	CP-14D-001	MXR-14C-101	
14	P	116	1"	3-#12	#12			(PBU-14C-201) POWER FEEDER	CP-14D-001	PBU-14C-201	
14	P	117	1"	3-#12	#12			(MXR-14C-201) POWER FEEDER	CP-14D-001	MXR-14C-201	
14	P	200	1.5"	3-#1	#6			37.5 KVA TRANSFORMER (XFMR-14-001) POWER FEEDER	SW-14-001	XFMR-14-001	
14	P	300	1"	3-#10	#12			DEWATERING BUILDING WINCH (WCH-14-101) POWER FEEDER	SW-14-001	WINCH (WCH-14-101) VENDOR CONTROL PANEL	
14	P	301	1"	VENDOR CABLE				DEWATERING BUILDING WINCH (WCH-14-101) POWER FEEDER	WINCH (WCH-14-101) VENDOR CONTROL PANEL	WCH-14-101	
14	P	400	1"	3-#12	#12			ROLL-UP DOOR MOTOR POWER FEEDER	SW-14-001	ROLL-UP DOOR VENDOR CONTROL PANEL	
14	P	401	1"	VENDOR CABLE				ROLL-UP DOOR MOTOR POWER FEEDER	ROLL-UP DOOR VENDOR CONTROL PANEL	ROLL-UP DOOR MOTOR	
14	P	500	1"	3-#10	#12			DEWATERING FANS CONTROL PANEL POWER FEEDER	SW-14-001	DEWATERING FANS CONTROL PANEL	
14	P	501	1"	3-#12	#12			SUPPLY FAN No. 1 (SFAN-14-001) POWER FEEDER	DEWATERING FANS CONTROL PANEL	SFAN-14-001	
14	P	502	1"	3-#12	#12			SUPPLY FAN No. 2 (SFAN-14-002) POWER FEEDER	DEWATERING FANS CONTROL PANEL	SFAN-14-002	
14	P	503	1"	3-#12	#12			SUPPLY FAN No. 3 (SFAN-14-003) POWER FEEDER	DEWATERING FANS CONTROL PANEL	SFAN-14-003	
14	P	504	1"	3-#12	#12			SUPPLY FAN No. 4 (SFAN-14-004) POWER FEEDER	DEWATERING FANS CONTROL PANEL	SFAN-14-004	
14	P	600	1"	3-#10	#12			DEWATERING NPW CONTROL PANEL (CP-14B-001) POWER FEEDER	SW-14-001	CP-14B-001	
14	P	601	1"	3-#12	#12			DEWATERING NPW BOOSTER PUMP No. 1 (VMP-14B-101) POWER FEEDER	CP-14B-001	VMP-14B-101	
14	P	602	1"	3-#12	#12			DEWATERING NPW BOOSTER PUMP No. 2 (VMP-14B-201) POWER FEEDER	CP-14B-001	VMP-14B-201	
								120/240V			
14	P	002	1"	2-#12	#12			DEWATERING AREA LIGHTS POWER FEEDER	LP-14-001	DEWATERING AREA LIGHTS	
14	P	003	1"	2-#12	#12			DEWATERING AREA RECEPTACLES POWER FEEDER	LP-14-001	DEWATERING AREA RECEPTACLES	
14	P	004A	1"	2-#8	#10			DEWATERING AREA SPACE HEATER POWER FEEDER	LP-14-001	EUH-14-001	EACH SPACE HEATER SHALL BE WIRED TO INDIVIDUAL CKTs ON LP-14-001.
14	P	004B	1"	2-#8	#10			DEWATERING AREA SPACE HEATER POWER FEEDER	LP-14-001	EUH-14-002	EACH SPACE HEATER SHALL BE WIRED TO INDIVIDUAL CKTs ON LP-14-001.
14	P	004C	1"	2-#8	#10			DEWATERING AREA SPACE HEATER POWER FEEDER	LP-14-001	EUH-14-003	EACH SPACE HEATER SHALL BE WIRED TO INDIVIDUAL CKTs ON LP-14-001.
14	P	005	1"	2-#12	#12			ELECTRICAL ROOM LIGHTS POWER FEEDER	LP-14-001	ELECTRICAL ROOM LIGHTS	
14	P	006	1"	2-#12	#12			ELECTRICAL ROOM RECEPTACLES POWER FEEDER	LP-14-001	ELECTRICAL ROOM RECEPTACLES	
14	P	007	1"	2-#12	#12			DEWATERING DUMPSTER AREA LIGHTS POWER FEEDER	LP-14-001	DEWATERING DUMPSTER AREA LIGHTS	
14	P	008	1"	2-#12	#12			DEWATERING DUMPSTER AREA RECEPTACLES POWER FEEDER	LP-14-001	DEWATERING DUMPSTER AREA RECEPTACLES	
14	P	009	1"	2-#12	#12			24-HOUR LIGHT TIMER POWER FEEDER	LP-14-001	24-HOUR LIGHT TIMER	
14	P	010	1"	2-#8	#10			A/C UNIT (HVAC-14-001) POWER FEEDER	LP-14-001	HVAC-14-001 DISCONNECT SWITCH	
14	P	011	1"	2-#8	#10			A/C UNIT (HVAC-14-001) POWER FEEDER	HVAC-14-001 DISCONNECT SWITCH	HVAC-14-001	
14	P	012	1"	2-#12	#12			FLOWMETER (FIT-14A-101) POWER FEEDER	CP-14D-101	FIT-14A-101	
14	P	013	1"	2-#12	#12			LEVEL TRANSMITTER (LT-14D-101) POWER FEEDER	CP-14D-101	LT-14D-101	
14	P	014	1"	2-#12	#12			LEVEL TRANSMITTER (LT-14D-102) POWER FEEDER	CP-14D-101	LT-14D-102	
14	P	201	2.5"	3-#4/0	#4			LIGHTING PANEL (LP-14-001) POWER FEEDER	XFMR-14-001	LP-14-001	
14	P	505	1"	2-#12	#12			CIRCULATION FAN (CFAN-14-001) POWER FEEDER	DEWATERING FANS CONTROL PANEL	CFAN-14-001	
								INSTRUMENTATION			
14	I	001	1"		#12	2-#14		EYEWASH STATION (EWS-14B-001) FLOW SWITCH ALARM SIGNAL	CP-10-001	EWS-14B-001	
14	I	002	1"				1-1 PR#18 TSP	SUPPLY FAN No. 1 (SFAN-14-001) DIFF. PRESSURE SENSOR SIGNAL	CP-10-001	SFAN-14-001	
14	I	003	1"				1-1 PR#18 TSP	SUPPLY FAN No. 2 (SFAN-14-002) DIFF. PRESSURE SENSOR SIGNAL	CP-10-001	SFAN-14-002	
14	I	004	1"				1-1 PR#18 TSP	SUPPLY FAN No. 3 (SFAN-14-003) DIFF. PRESSURE SENSOR SIGNAL	CP-10-001	SFAN-14-003	
14	I	005	1"				1-1 PR#18 TSP	SUPPLY FAN No. 4 (SFAN-14-004) DIFF. PRESSURE SENSOR SIGNAL	CP-10-001	SFAN-14-004	
14	I	100	1"				CAT 6 ETHERNET	VOLUTE PRESS CONTROL PANEL (CP-14D-101) SIGNALS	CP-14D-101	CP-10-001	
14	I	101	1"		#12		1-1 PR#18 TSP	FLOCCULATION MIXER LEVEL TRANSMITTER (LT-14D-101) SIGNAL	CP-14D-101	LT-14D-101	
14	I	102	1"		#12		1-1 PR#18 TSP	FLOCCULATION MIXER LEVEL TRANSMITTER (LT-14D-102) SIGNAL	CP-14D-101	LT-14D-104	
14	I	103	1"		#12	2-#14		MIXER TANK HIGH LEVEL (LSH-14D-102) LOCKOUT SIGNAL	CP-14D-101	LSH-14D-101	
14	I	104	1"		#12	2-#14		SOLENOID VALVE No. 1 (SV-14D-101A) SIGNAL	CP-14D-101	SV-14D-101A	
14	I	105	1"		#12	2-#14		SOLENOID VALVE No. 2 (SV-14D-101B) SIGNAL	CP-14D-101	SV-14D-101B	
14	I	106	1"		#12	2-#14		SOLENOID VALVE No. 3 (SV-14D-101C) SIGNAL	CP-14D-101	SV-14D-101C	
14	I	107	1"		#12	2-#14		SOLENOID VALVE No. 4 (SV-14D-101D) SIGNAL	CP-14D-101	SV-14D-101D	
14	I	108	1"		#12	2-#14		SOLENOID VALVE No. 5 (SV-14D-101E) SIGNAL	CP-14D-101	SV-14D-101E	
14	I	109	1"		#12	2-#14		SOLENOID VALVE No. 6 (SV-14D-101F) SIGNAL	CP-14D-101	SV-14D-101F	
14	I	110	1"		#12	2-#14		SCREW CONVEYOR E-STOP (ES-14D-102) SIGNAL	CP-14D-101	ES-14D-102	
14	I	111	1"		#12	2-#14		SCREW CONVEYOR E-STOP (ES-14D-103) SIGNAL	CP-14D-101	ES-14D-103	
14	I	112	1"		#12	2-#14		VOLUTE PRESS E-STOP (ES-14D-101) SIGNAL	CP-14D-101	ES-14D-101	
14	I	113	1"		#12		1-1 PR#18 TSP	DEWATERING PRESS FEED PUMP FLOW (FIT-14A-101) SIGNAL	CP-14D-101	FIT-14A-101	
14	I	114	1"		#14	4-#14		PRESS FEED PUMP No. 1 PRESSURE SWITCH (PS-14A-101) SIGNAL	CP-14D-101	PS-14A-101	
14	I	115	1"		#14	4-#14		PRESS FEED PUMP No. 2 PRESSURE SWITCH (PS-14A-201) SIGNAL	CP-14D-101	PS-14A-201	
14	I	116	1"		#14	2-#14		PRESS FEED PUMP No. 1 VIBRATION SENSOR (VSH-14A-101) SIGNAL	CP-14D-101	VSH-14A-101	
14	I	117	1"		#14	2-#14		PRESS FEED PUMP No. 2 VIBRATION SENSOR (VSH-14A-201) SIGNAL	CP-14D-101	VSH-14A-201	
14	I	118	1"		#12	20-#14		DEWATERING FANS CONTROL PANEL DISCRETE SIGNALS	CP-10-001	DEWATERING FANS CONTROL PANEL	
14	I	119	1"		#12	6-#14	1-1 PR#18 TSP	POLYMER BLENDING UNIT No. 1 (PBU-14C-101) SIGNALS	PBU-14C-101	CP-14D-101	
14	I	120	1"		#12	6-#14	1-1 PR#18 TSP	POLYMER BLENDING UNIT No. 2 (PBU-14C-201) SIGNALS	PBU-14C-201	CP-14D-101	
14	I	121	1"	PULLSTRING				SPARE CONDUIT	IPB-12-001	DEWATERING ELECTRICAL ROOM	
14	I	122	1"	PULLSTRING				SPARE CONDUIT	IPB-12-001	DEWATERING ELECTRICAL ROOM	
14	I	123	1"	PULLSTRING				SPARE CONDUIT	IPB-12-001	DEWATERING ELECTRICAL ROOM	
14	I	124	1"	PULLSTRING				SPARE CONDUIT	IPB-12-001	DEWATERING ELECTRICAL ROOM	
14	I	600	2"		#12	30-#14		DEWATERING NPW CONTROL PANEL (CP-14B-001) SIGNALS	CP-14B-001	CP-14D-101	
14	I	601	1"		#12	4-#14		DEWATERING NPW BOOSTER PUMP No. 1 PRESSURE SWITCH (PS-14B-101) SIGNAL	CP-14B-001	PS-14B-101	
14	I	602	1"		#12	4-#14		DEWATERING NPW BOOSTER PUMP No. 2 PRESSURE SWITCH (PS-14B-201) SIGNAL	CP-14B-001	PS-14B-201	

NOTES

Note *: Existing Conduit with Proposed Conductors.

NO.	DATE	REVISIONS	APP.

WILBARGER CREEK M.U.D. No. 2
TRAVIS COUNTY, TEXAS

WASTEWATER TREATMENT PLANT
EXPANSION TO 1.5 MGD

CONDUIT SCHEDULE
– SHEET 6 OF 6

QUIDDITY
Texas Board of Professional Engineers and Land Surveyors Reg. No. F-23290
912 South Capital of Texas Hwy, Suite 300 • Austin, TX 78746 • 512.441.9493

SCALE: NONE DGN. BY: EFLORES
DATE: SEPTEMBER 2026 DWN. BY: SSOMERS
JOB NO. 0A651–0021–02 DWG. NO.
SUBMITTED: SURV. BY:
F.B. NO.

STATE OF TEXAS
BAO LE THIEN TRAN
149385
LICENSED PROFESSIONAL ENGINEER
09/22/2026

0–E–9
SHEET NO. 155 OF 230

C:\Users\JAS\DC\ACCDocs\Quiddity\0A651-0021-02 _ WILBARGER WWTP EXP. 1.5 MGD\Project Files\PLANS\ELEC.dwg, Jul 01, 2026 – 2:24pm, JAS

0 1 2 3 4 5 ORIGINAL SCALE IN INCHES FOR REDUCED PLANS

DUCT BANK A							
SIZE	POWER			INSTRUMENTATION			SIZE
1"	03	P	001	03	I	200	1"
1"	03	P	200	05	I	001	1.5"
1"	03	P	501	05	I	002	1"
1"	03	P	601	06	I	300	1"
1"	05	P	001	10	I	100	1"
1"	05	P	002	11	I	011	1"
1"	05	P	101	13	I	001	1"
1"	05	P	201	14	I	121	1"
1"	05	P	301	14	I	122	1"
1"	06	P	001	14	I	123	1"
1"	06	P	300	14	I	124	1"
1"	11	P	001				
2.5"	14	P	001				

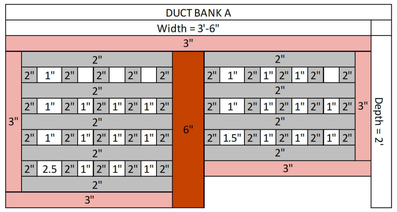

DUCT BANK B							
SIZE	POWER			INSTRUMENTATION			SIZE
1"	05	P	001	05	I	001	1.5"
1"	05	P	002	05	I	002	1"
1"	05	P	101				
1"	05	P	201				
1"	05	P	301				

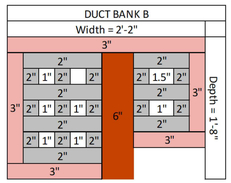

DUCT BANK C							
SIZE	OWER			INSTRUMENTATION			SIZE
1"	06	P	001	06	I	300	1"
1"	06	P	300	11	I	011	1"
1"	11	P	001				

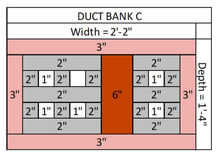

DUCT BANK D							
SIZE	POWER			INSTRUMENTATION			SIZE
1"	06	P	001	06	I	300	1"
1"	06	P	300				

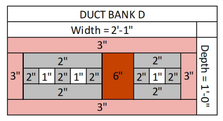

DUCT BANK E							
SIZE	POWER			INSTRUMENTATION			SIZE
1"	11	P	001	11	I	011	1"

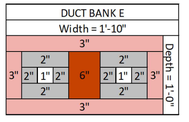

DUCT BANK F							
SIZE	POWER			INSTRUMENTATION			SIZE
1"	03	P	001	03	I	200	1"
1"	03	P	200	10	I	100	1"
1"	03	P	501	13	I	001	1"
1"	03	P	601	13	I	301	1"
2.5"	14	P	001	14	I	121	1"
				14	I	122	1"
				14	I	123	1"
				14	I	124	1"

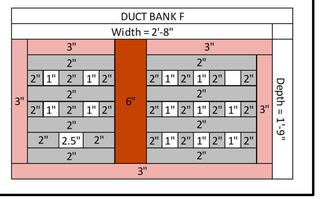

DUCT BANK G							
SIZE	POWER			INSTRUMENTATION			SIZE
1"	03	P	001	03	I	200	1"
1"	03	P	200	03	I	501	1"
1"	03	P	501	03	I	601	1"
1"	03	P	601	10	I	005	1"

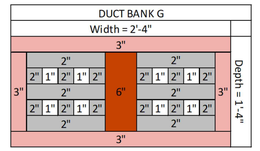

DUCT BANK H							
SIZE	POWER			INSTRUMENTATION			SIZE
2.5"	14	P	001	03	I	501	1"
				03	I	601	1"
				10	I	005	1"
				10	I	100	1"
				13	I	001	1"
				13	I	301	1"
				14	I	121	1"
				14	I	122	1"
				14	I	123	1"
				14	I	124	1"

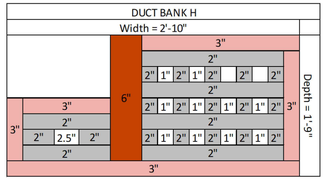

DUCT BANK I							
SIZE	POWER			INSTRUMENTATION			SIZE
1"	10	P	001	10	I	001	1"
1"	10	P	101	10	I	002	1"
1"	10	P	201	10	I	003	1"

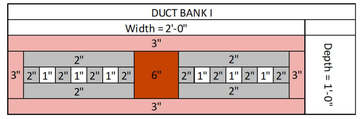

DUCT BANK J							
SIZE	POWER			INSTRUMENTATION			SIZE
1"	13	P	001	13	I	001	1"
1"	14	P	012	13	I	002	1"
1"	14	P	112	13	I	301	1"
1"	14	P	113	14	I	113	1"
				14	I	114	1"
				14	I	115	1"
				14	I	116	1"
				14	I	117	1"

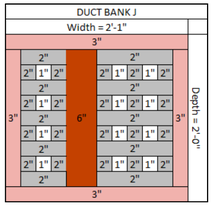

DUCT BANK K							
SIZE	POWER			INSTRUMENTATION			SIZE
				11	I	013	1"

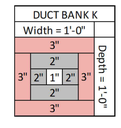

DUCT BANK L							
SIZE	POWER			INSTRUMENTATION			SIZE
				03	I	501	1"
				03	I	601	1"

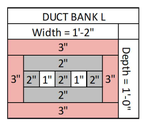

DUCT BANK M							
SIZE	POWER			INSTRUMENTATION			SIZE
2.5"	14	P	001	10	I	005	1"
				10	I	100	1"
				13	I	001	1"
				13	I	301	1"
				14	I	121	1"
				14	I	122	1"
				14	I	123	1"
				14	I	124	1"

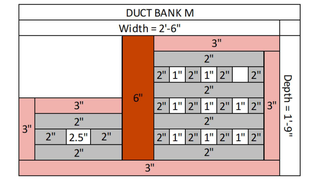

LEGEND:

- RED–DYE CONCRETE
- CONDUIT SPACER
- 1" CONDUIT W/ DIAMETER
- DEDICATED SPACE BETWEEN POWER AND INSTRUMENTATION

NO.	DATE	REVISIONS	APP.

WILBARGER CREEK M.U.D. No. 2
TRAVIS COUNTY, TEXAS

WASTEWATER TREATMENT PLANT EXPANSION TO 1.5 MGD

ELECTRICAL DUCT BANK SECTIONS

QUIDDITY
Texas Board of Professional Engineers and Land Surveyors Reg. No. F-23290
912 South Capital of Texas Hwy, Suite 300 • Austin, TX 78746 • 512.441.9493

SCALE: NONE
DATE: SEPTEMBER 2026
JOB NO. 0A651–0021–02
SUBMITTED:

DGN. BY: EFLORES
DWN. BY: SSOMERS
DWG. NO.
SURV. BY:
F.B. NO.

STATE OF TEXAS
BAO LE THIEN TRAN
149385
LICENSED PROFESSIONAL ENGINEER
09/22/2026

0–E–10
SHEET NO. 156 OF 230

C:\Users\cgular\DC\ACCDocs\Quiddity – Water–\0A651–0021–02 _ WILBARGER WWTP EXP. 1.5 MGD\Project Files\PLANS\ELEC.dwg, Feb 18, 2026 – 5:50pm, cgular

0 1 2 3 4 5 ORIGINAL SCALE IN INCHES FOR REDUCED PLANS

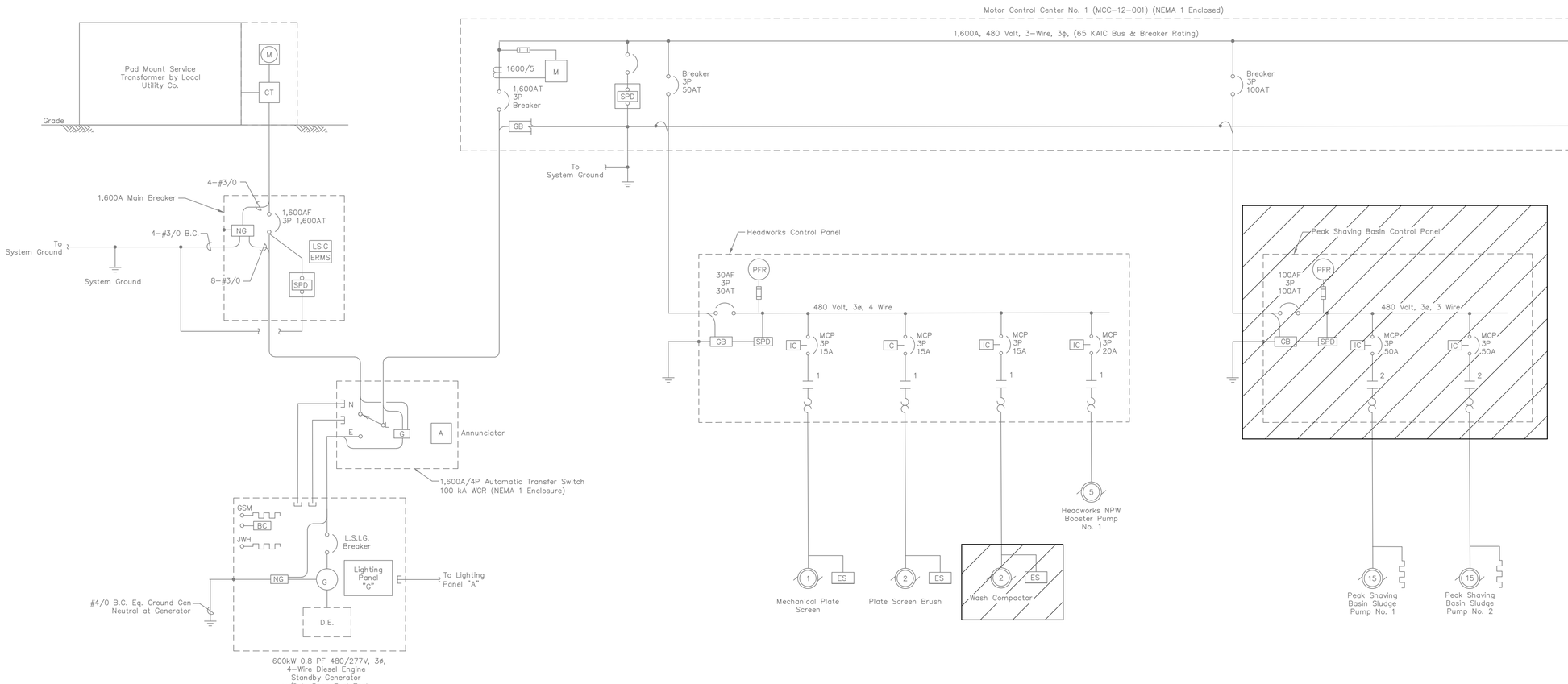

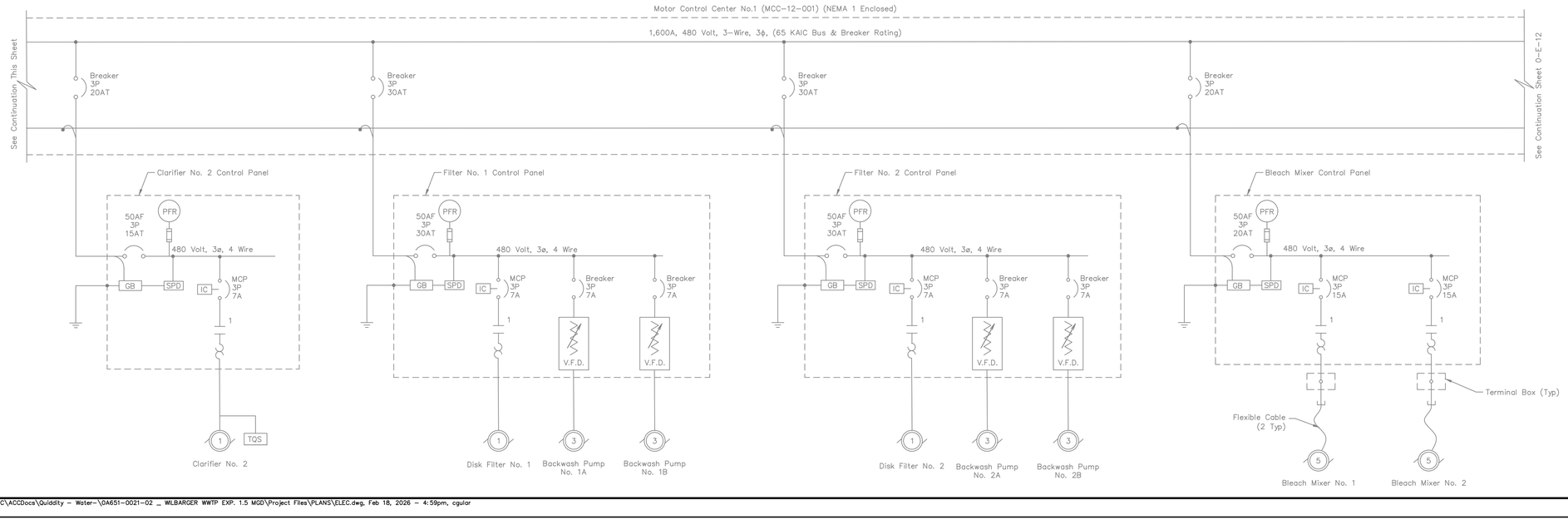

LEGEND:

ITEMS TO BE DEMOLISHED (SEE ELECTRICAL DEMOLITION SPECIFICATION SECTION 16014)

NOTES:

1. Existing equipment and utility information is based on available existing plans and site observations. The Contractor shall field verify existing conditions prior to construction and advise the Owner of any discrepancies from the drawings.

NO.	DATE	REVISIONS	APP.

WILBARGER CREEK M.U.D. No. 2
TRAVIS COUNTY, TEXAS

WASTEWATER TREATMENT PLANT EXPANSION TO 1.5 MGD

ELECTRICAL ONE-LINE DIAGRAM DEMOLITION - SHEET 1 OF 2

QUIDDITY
Texas Board of Professional Engineers and Land Surveyors Reg. No. F-23290
912 South Capital of Texas Hwy, Suite 300 • Austin, TX 78746 • 512.441.9493

SCALE:	NONE	DGN. BY:	EFLORES
DATE:	FEBRUARY 2026	DWN. BY:	SSOMERS
JOB NO.	0A651-0021-02	DWG. NO.	
SUBMITTED:		SURV. BY:	
		F.B. NO.	

STATE OF TEXAS
BAO LE THIEN TRAN
149385
LICENSED PROFESSIONAL ENGINEER
03/10/2026

0-E-11
SHEET NO. 157 OF 230

C:\Users\cgular\DC\ACCDocs\Quiddity - Water-\0A651-0021-02 _ WILBARGER WWTP EXP. 1.5 MGD\Project Files\PLANS\ELEC.dwg, Feb 18, 2026 - 4:59pm, cgular

ORIGINAL SCALE IN INCHES FOR REDUCED PLANS

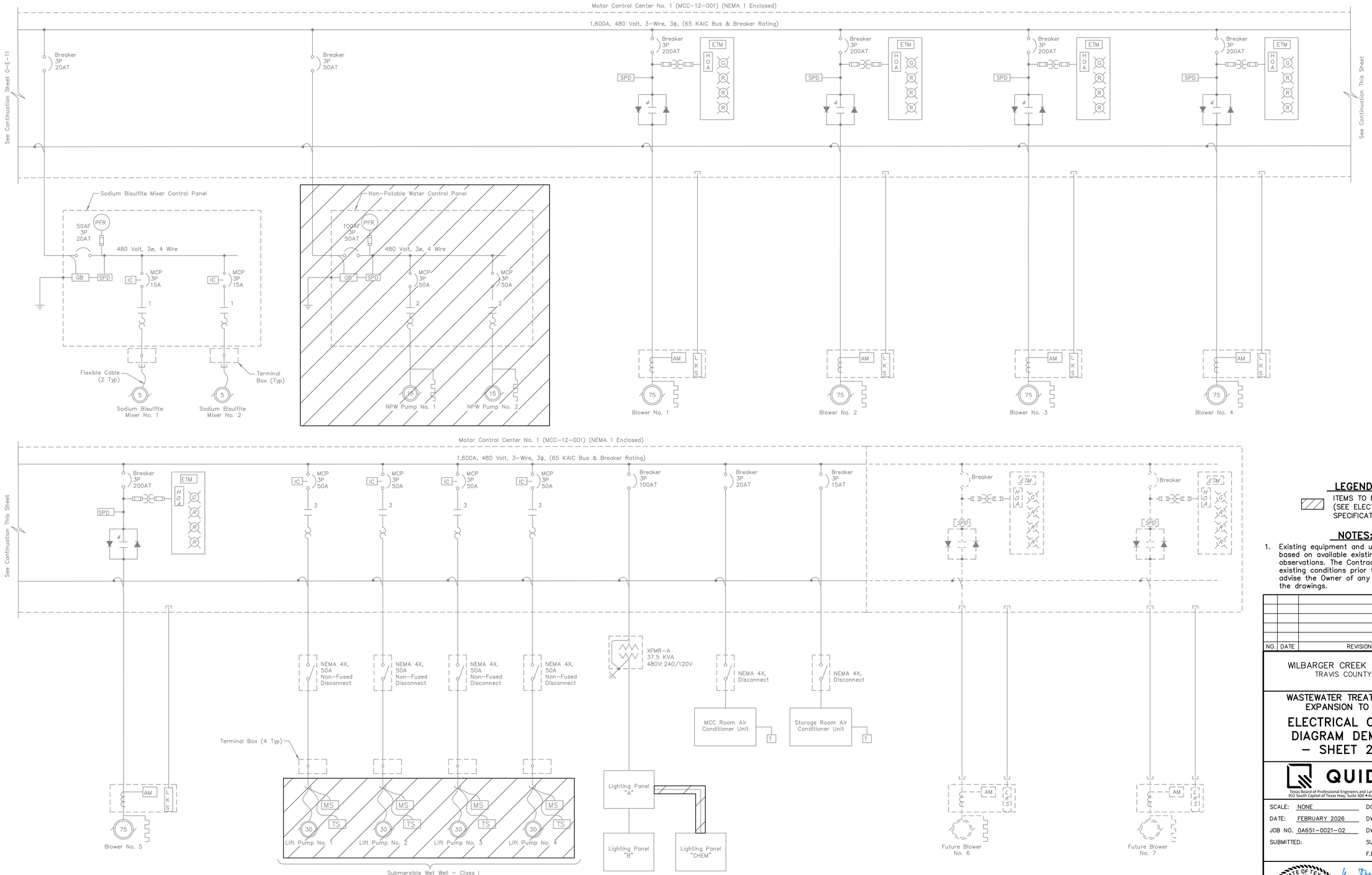

LEGEND:

ITEMS TO BE DEMOLISHED (SEE ELECTRICAL DEMOLITION SPECIFICATION SECTION 16014)

NOTES:

1. Existing equipment and utility information is based on available existing plans and site observations. The Contractor shall field verify existing conditions prior to construction and advise the Owner of any discrepancies from the drawings.

NO.	DATE	REVISIONS	APP.

WILBARGER CREEK M.U.D. No. 2
TRAVIS COUNTY, TEXAS

WASTEWATER TREATMENT PLANT EXPANSION TO 1.5 MGD

ELECTRICAL ONE-LINE DIAGRAM DEMOLITION - SHEET 2 OF 2

QUIDDITY
Texas Board of Professional Engineers and Land Surveyors Reg. No. F-23290
912 South Capital of Texas Hwy, Suite 300 • Austin, TX 78746 • 512.441.9493

SCALE:	NONE	DGN. BY:	EFLORES
DATE:	FEBRUARY 2026	DWN. BY:	SSOMERS
JOB NO.	0A651-0021-02	DWG. NO.	
SUBMITTED:		SURV. BY:	
		F.B. NO.	

STATE OF TEXAS
BAO LE THEN TRAN
149385
LICENSED PROFESSIONAL ENGINEER
03/10/2026

0-E-12
SHEET NO. 158 OF 230

0 1 2 3 4 5 ORIGINAL SCALE IN INCHES FOR REDUCED PLANS

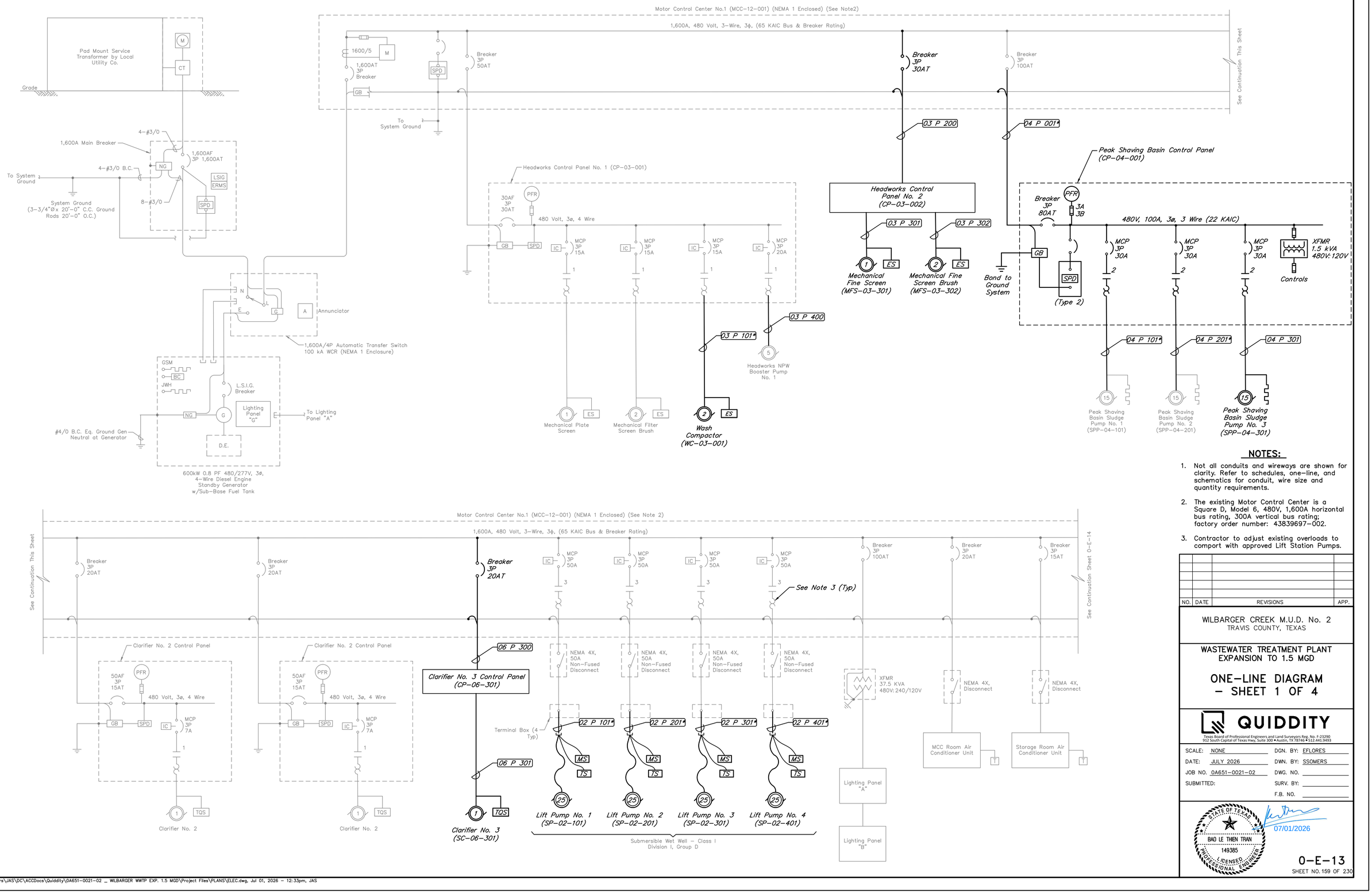

NOTES:

1. Not all conduits and wireways are shown for clarity. Refer to schedules, one–line, and schematics for conduit, wire size and quantity requirements.
2. The existing Motor Control Center is a Square D, Model 6, 480V, 1,600A horizontal bus rating, 300A vertical bus rating; factory order number: 43839697–002.
3. Contractor to adjust existing overloads to comport with approved Lift Station Pumps.

NO.	DATE	REVISIONS	APP.

WILBARGER CREEK M.U.D. No. 2
TRAVIS COUNTY, TEXAS

WASTEWATER TREATMENT PLANT EXPANSION TO 1.5 MGD

ONE–LINE DIAGRAM – SHEET 1 OF 4

QUIDDITY
Texas Board of Professional Engineers and Land Surveyors Reg. No. F-23290
912 South Capital of Texas Hwy, Suite 300 • Austin, TX 78746 • 512.441.9493

SCALE:	NONE	DGN. BY:	EFLORES
DATE:	JULY 2026	DWN. BY:	SSOMERS
JOB NO.	0A651–0021–02	DWG. NO.	
SUBMITTED:		SURV. BY:	
		F.B. NO.	

STATE OF TEXAS
BAO LE THIEN TRAN
149385
LICENSED PROFESSIONAL ENGINEER
07/01/2026

0–E–13
SHEET NO. 159 OF 230

C:\Users\JAS\DC\ACCDocs\Quiddity\0A651–0021–02 _ WILBARGER WWTP EXP. 1.5 MGD\Project Files\PLANS\ELEC.dwg, Jul 01, 2026 – 12:33pm, JAS

0 1 2 3 4 5 ORIGINAL SCALE IN INCHES FOR REDUCED PLANS

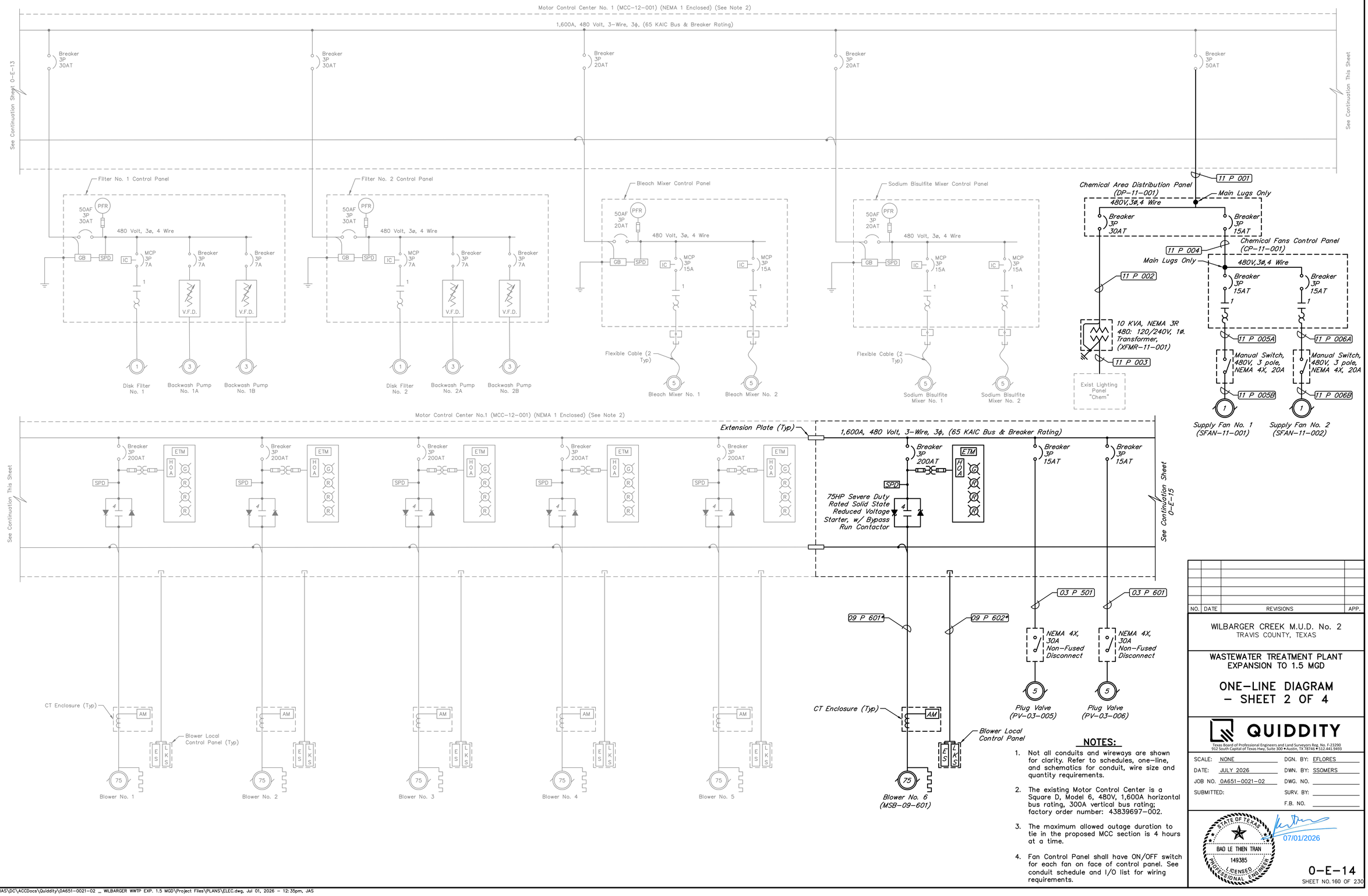

NOTES:

1. Not all conduits and wireways are shown for clarity. Refer to schedules, one-line, and schematics for conduit, wire size and quantity requirements.
2. The existing Motor Control Center is a Square D, Model 6, 480V, 1,600A horizontal bus rating, 300A vertical bus rating; factory order number: 43839697-002.
3. The maximum allowed outage duration to tie in the proposed MCC section is 4 hours at a time.
4. Fan Control Panel shall have ON/OFF switch for each fan on face of control panel. See conduit schedule and I/O list for wiring requirements.

NO.	DATE	REVISIONS	APP.

WILBARGER CREEK M.U.D. No. 2
TRAVIS COUNTY, TEXAS

WASTEWATER TREATMENT PLANT EXPANSION TO 1.5 MGD

ONE-LINE DIAGRAM - SHEET 2 OF 4

QUIDDITY
Texas Board of Professional Engineers and Land Surveyors Reg. No. F-23290
912 South Capital of Texas Hwy, Suite 300 • Austin, TX 78746 • 512.441.9493

SCALE: NONE
DATE: JULY 2026
JOB NO. 0A651-0021-02
SUBMITTED:
DGN. BY: EFLORES
DWN. BY: SSOMERS
DWG. NO.
SURV. BY:
F.B. NO.

STATE OF TEXAS
BAO LE THEN TRAN
149385
LICENSED PROFESSIONAL ENGINEER
07/01/2026

0-E-14
SHEET NO. 160 OF 230

C:\Users\JAS\DC\ACCDocs\Quiddity\0A651-0021-02 _ WILBARGER WWTP EXP. 1.5 MGD\Project Files\PLANS\ELEC.dwg, Jul 01, 2026 - 12:35pm, JAS

0 1 2 3 4 5 ORIGINAL SCALE IN INCHES FOR REDUCED PLANS

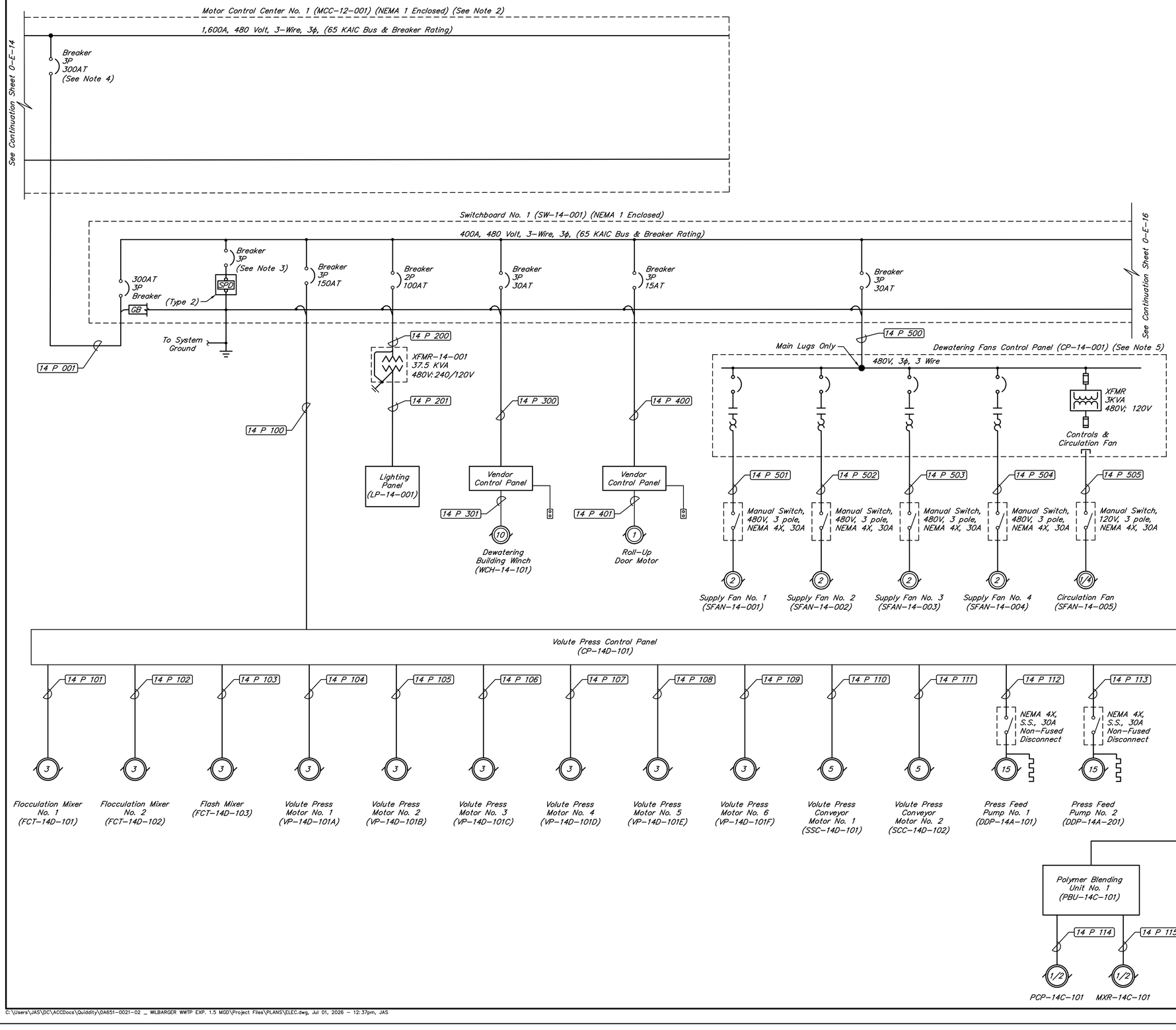

NOTES:

1. Not all conduits and wireways are shown for clarity. Refer to schedules, one-line, and schematics for conduit, wire size and quantity requirements
2. The existing Motor Control Center is a Square D, Model 6, 480V, 1,600A horizontal bus rating, 300A vertical bus rating; factory order number: 43839697-002.
3. Surge Protection Device (SPD) breaker and wire size shall be sized per SPD Manufacturer's requirements.
4. Contractor shall install sign on face of MCC Breaker that reads "DO NOT OPERATE WHILE ON EMERGENCY POWER". See Detail Sheet 0-E-20.
5. Fan Control Panel shall have ON/OFF switch for each fan on face of control panel. See conduit schedule and I/O list for wiring requirements.

NO.	DATE	REVISIONS	APP.

WILBARGER CREEK M.U.D. No. 2
TRAVIS COUNTY, TEXAS

WASTEWATER TREATMENT PLANT EXPANSION TO 1.5 MGD

ONE-LINE DIAGRAM - SHEET 3 OF 4

QUIDDITY
Texas Board of Professional Engineers and Land Surveyors Reg. No. F-23290
912 South Capital of Texas Hwy, Suite 300 • Austin, TX 78746 • 512.441.9493

SCALE:	NONE	DGN. BY:	EFLORES
DATE:	SEPTEMBER 2026	DWN. BY:	SSOMERS
JOB NO.	0A651-0021-02	DWG. NO.	
SUBMITTED:		SURV. BY:	
		F.B. NO.	

STATE OF TEXAS
BAO LE THIEN TRAN
149385
LICENSED PROFESSIONAL ENGINEER
09/22/2026

0-E-15
SHEET NO. 161 OF 230

C:\Users\JAS\DC\ACCDocs\Quiddity\0A651-0021-02 _ WILBARGER WWTP EXP. 1.5 MGD\Project Files\PLANS\ELEC.dwg, Jul 01, 2026 - 12:37pm, JAS

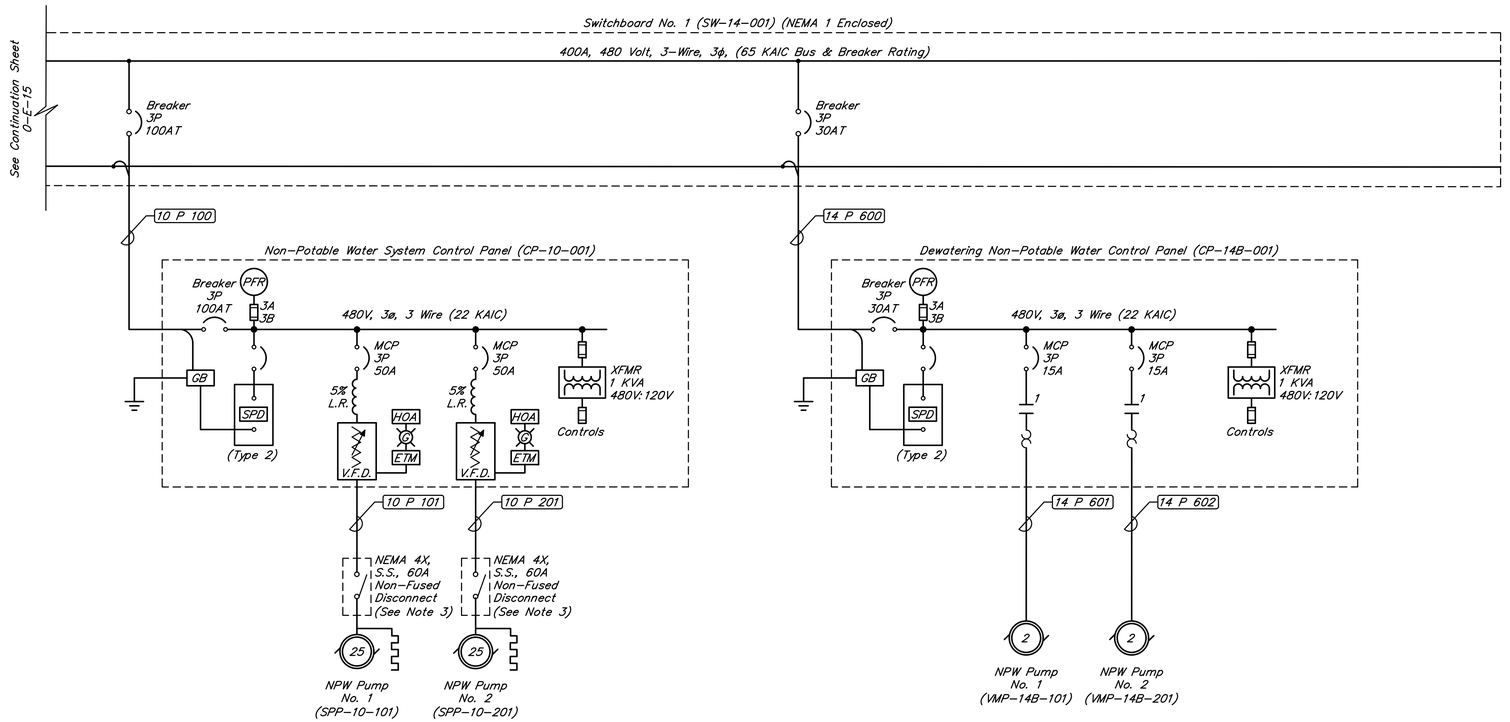

GENERAL NOTES:

1. Not all conduits and wireways are shown for clarity. Refer to schedules, one-line, and schematics for conduit, wire size and quantity requirements
2. Surge Protection Device (SPD) breaker and wire size shall be sized per SPD Manufacturer's requirements.
3. Provide disconnect with SPDT Contact.

NO.	DATE	REVISIONS	APP.

WILBARGER CREEK M.U.D. No. 2
TRAVIS COUNTY, TEXAS

WASTEWATER TREATMENT PLANT
EXPANSION TO 1.5 MGD

ONE-LINE DIAGRAM – SHEET 4 OF 4

QUIDDITY
Texas Board of Professional Engineers and Land Surveyors Reg. No. F-23290
912 South Capital of Texas Hwy, Suite 300 • Austin, TX 78746 • 512.441.9493

SCALE:	NONE	DGN. BY:	EFLORES
DATE:	JULY 2026	DWN. BY:	SSOMERS
JOB NO.	0A651-0021-02	DWG. NO.	
SUBMITTED:		SURV. BY:	
		F.B. NO.	

STATE OF TEXAS
BAO LE THIEN TRAN
149385
LICENSED PROFESSIONAL ENGINEER
07/01/2026

0-E-16
SHEET NO. 162 OF 230

0 1 2 3 4 5 ORIGINAL SCALE IN INCHES FOR REDUCED PLANS

NETWORK ACHITECTURE LEGEND:

ESW	ETHERNET SWITCH	FIT	ANALYZER INDICATING TRANSMITTER
FPP	FIBER-OPTIC PATCH PANEL	PSP	PERISTALTIC PUMP
HMI	HUMAN/MACHINE INTERFACE	UPS	UNINTERRUPTIBLE POWER SUPPLY
VFD	VARIABLE FREQUENCY DRIVE	PIT	PRESSURE INDICATING TRANSMITTER
LIT	LEVEL INDICATING TRANSMITTER		

FIELD I/O (DISCRETE/ANALOG)

ETHERNET (CAT 6)

FIBER OPTIC CABLE

Lift Station

Lift Station Local Control Panel
CP-02-101

Lift Station PLC Control Panel
CP-02-002
PLC-02-001 ESW-02-001 FFP-02-001

LIT-02-101

Chemical Building

Chemical System Control Panel
CP-11-101
PLC-11-101 ESW-11-101 FPP-11-101

FIT-08-001
FIT-10-001

LIT-11A-101 LIT-11B-101
LIT-11A-201 LIT-11B-201
LIT-11C-101
LIT-11C-201
LIT-11C-301

PSP-11A-101 PSP-11A-201
PSP-11B-101 PSP-11B-201
PSP-11C-101 PSP-11C-201 PSP-11C-301

Headworks

Headworks Control Panel No. 1
CP-03-101
PLC-03-101 ESW-03-101
LIT-03-101

Headworks Control Panel No. 2
CP-03-301
PLC-03-301 EWS-03-301
LIT-03-301

Blower No. 1
CP-09-101
PLC-09-101
OIT-09-101

Blower No. 2
CP-09-201
PLC-09-201
OIT-09-201

Blower No. 3
CP-09-301
PLC-09-301
OIT-09-301

Blower No. 4
CP-09-401
PLC-09-401
OIT-09-401

Blower No. 5
CP-09-501
PLC-09-501
OIT-09-501

Blower No. 6
CP-09-601
PLC-09-601
OIT-09-601

Peak Shaving Basin Control Panel
CP-04-201
PLC-04-201 ESW-04-201

Sludge Holding Tank

FIT-13-101 FIT-13-102
FIT-13-201 FIT-13-202
FIT-13-301 FIT-13-302
LSL-13-001 LSL-13-002

SH Mixer Control Panel
CP-08-301

SBS Mixer Control Panel
CP-08-301

PSL-09-001
PSL-09-002
PSL-09-003

Dewatering Building

NPW Control Panel
CP-10-001
PLC-10-001
ESW-10-001
FPP-10-001

LSL-08-001
PIT-10-001
PSL-10-001
PSH-10-002

Dewatering Press Control Panel
CP-14D-101
PLC-14D-101 EWS-14D-101

Polymer Blending Unit No. 1
PBU-14C-101

Polymer Blending Unit No. 2
PBU-14C-201

FIT-14D-201 LIT-14D-101 LSH-14D-101

Dewatering NPW Booster Pumps Control Panel
CP-14B-001

PSL-14A-001 PSH-14B-001

Tertiary Filter Control Panel No.1
CP-07-101
PLC-07-101 ESW-07-101
OIT-07-101
SPP-07-101 VFD
SPP-07-101 VFD

AIT-07-101
FIT-07-101
LE-07-101
PSH-07-101

PIT-07-101 PIT-07-102 PIT-07-103 PIT-07-104

Tertiary Filter Control Panel No.2
CP-07-201
PLC-07-201 ESW-07-201
OIT-07-201
SPP-07-201 VFD
SPP-07-201 VFD

AIT-07-201
FIT-07-201
LE-07-201
PSH-07-201

PIT-07-201 PIT-07-202 PIT-07-203 PIT-07-204

Clarifier No. 1 Control Panel
CP-06-101

Clarifier No. 2 Control Panel
CP-06-201

Clarifier No. 3 Control Panel
CP-06-301

Aeration Basin

AIT-05-101 AIT-05-201 AIT-05-301

FIT-05-101 FIT-05-102 FIT-05-201 FIT-05-202 FIT-05-301 FIT-05-302

Electrical Building

Control Room
CP-12-101
ESW-12-101
PLC-12-101
PPC-12-101 (Ignition Data Collector)
Firewall
Ignition Virtual SCADA Server

FPP-12-101
FPP-12-201
FPP-12-301

Electrical Room

Communication Panel
ESW-12-102

MCC
Power Quality Meter
ATS

NO.	DATE	REVISIONS	APP.

WILBARGER CREEK M.U.D. No. 2
TRAVIS COUNTY, TEXAS

WASTEWATER TREATMENT PLANT EXPANSION TO 1.5 MGD

NETWORK ARCHITECTURE

QUIDDITY
Texas Board of Professional Engineers and Land Surveyors Reg. No. F-23290
912 South Capital of Texas Hwy, Suite 300 • Austin, TX 78746 • 512.441.9493

SCALE:	NONE	DGN. BY:	DO'DAY
DATE:	FEBRUARY 2026	DWN. BY:	SSOMERS
JOB NO.	0A651-0021-02	DWG. NO.	
SUBMITTED:		SURV. BY:	
		F.B. NO.	

STATE OF TEXAS
JOEL J. JOHN
115778
LICENSED PROFESSIONAL ENGINEER
03/10/2026

0-E-17
SHEET NO. 163 OF 230

C:\Users\cgular\DC\ACCDocs\Quiddity – Water-\0A651-0021-02 _ WILBARGER WWTP EXP. 1.5 MGD\Project Files\PLANS\ELEC.dwg, Feb 18, 2026 – 4:57pm, cgular

0 1 2 3 4 5 ORIGINAL SCALE IN INCHES FOR REDUCED PLANS

NOTES:

1. When Stub–Up is installed adjacent to, but not directly up against a wall or structure, the encasement shall be constructed to maintain a minimum clearance of three inches (3") to the wall or structure to prevent accumulation of debris.

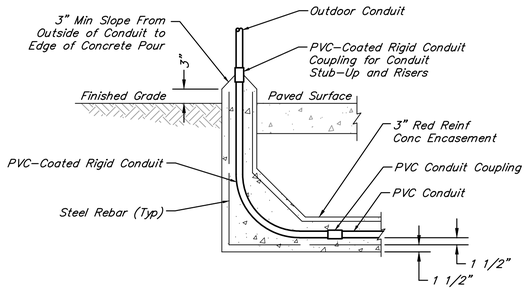

1 TYPICAL CONDUIT STUB–UP DETAIL
NOT TO SCALE

NOTES:

1. Provide grounding fitting for metallic conduits entering manhole. Bond grounding fitting to the duct bank grounding conductor.
2. Fill cracks and joints with non–shrink grout all around end bell fitting. End bell shall be flush with the wall.

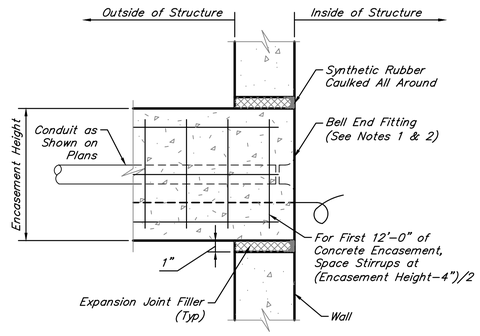

2 CONCRETE ENCASED DUCT BANK PENETRATION AT MANHOLE AND STRUCTURE DETAIL
NOT TO SCALE

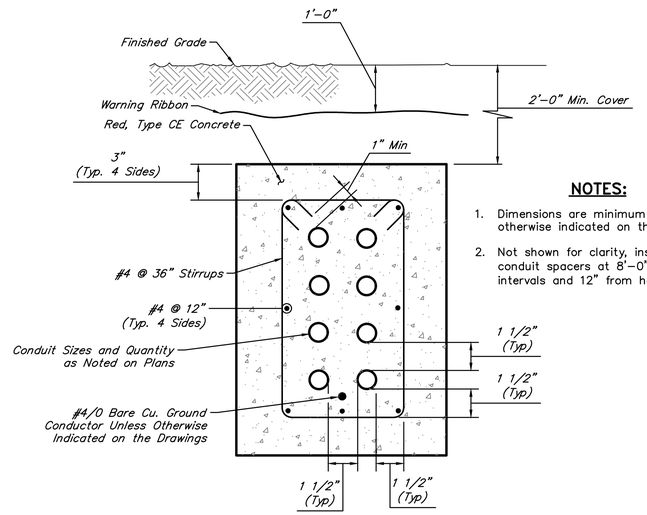

NOTES:

1. Dimensions are minimum unless otherwise indicated on the drawings.
2. Not shown for clarity, install PVC conduit spacers at 8'–0" (maximum) intervals and 12" from hoops.

3 CONCRETE REINFORCED ENCASED DUCT BANK SECTION DETAIL
NOT TO SCALE

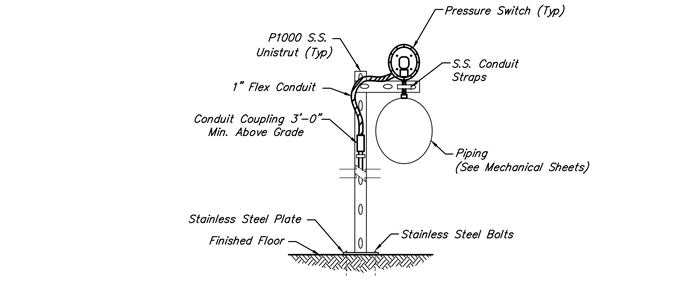

4 TYPICAL PRESSURE SWITCH/TRANSMITTER MOUNT DETAIL
NOT TO SCALE

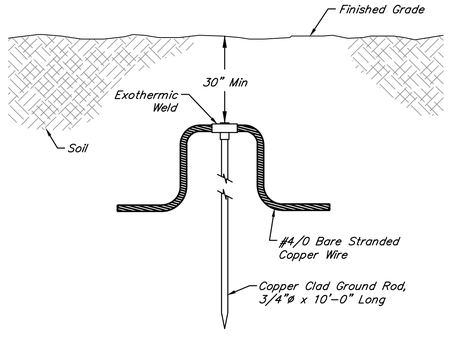

5 GROUND ROD INSTALLATION DETAIL
NOT TO SCALE

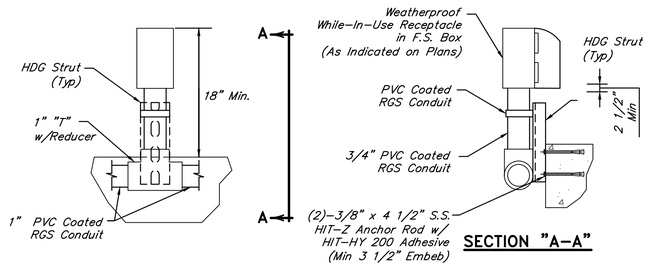

6 BASIN RECEPTACLE MOUNTING DETAIL
NOT TO SCALE

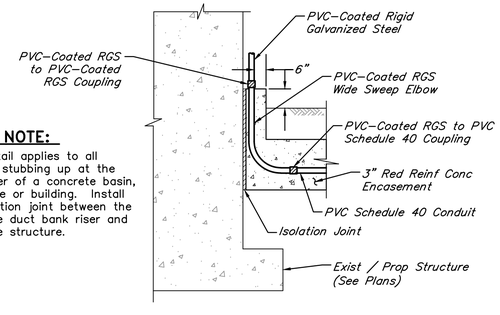

NOTE:

This detail applies to all conduit stubbing up at the perimeter of a concrete basin, structure or building. Install an isolation joint between the concrete duct bank riser and concrete structure.

7 CONDUIT STUB–UP AT WALL DETAIL
NOT TO SCALE

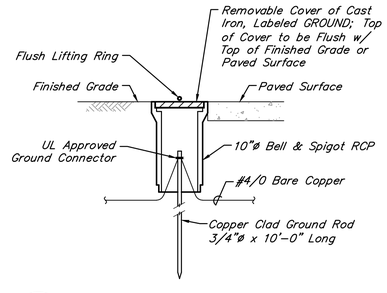

8 GROUND WELL DETAIL
NOT TO SCALE

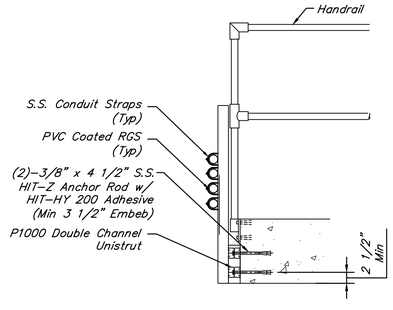

9 CONDUIT HANDRAIL MOUNTING DETAIL
NOT TO SCALE

NO.	DATE	REVISIONS	APP.

WILBARGER CREEK M.U.D. No. 2
TRAVIS COUNTY, TEXAS

WASTEWATER TREATMENT PLANT EXPANSION TO 1.5 MGD

ELECTRICAL DETAILS – SHEET 1 OF 5

QUIDDITY
Texas Board of Professional Engineers and Land Surveyors Reg. No. F-23290
912 South Capital of Texas Hwy, Suite 300 • Austin, TX 78746 • 512.441.9493

SCALE:	NONE	DGN. BY:	EFLORES
DATE:	MARCH 2026	DWN. BY:	SSOMERS
JOB NO.	0A651–0021–02	DWG. NO.	
SUBMITTED:		SURV. BY:	
		F.B. NO.	

STATE OF TEXAS
BAO LE THIEN TRAN
149385
LICENSED PROFESSIONAL ENGINEER
03/10/2026

0–E–18
SHEET NO. 164 OF 230

C:\Users\tdobbins\DC\ACCDocs\Quiddity – Water–\0A651–0021–02 _ WILBARGER WWTP EXP. 1.5 MGD\Project Files\PLANS\ELEC–2.dwg, Mar 10, 2026 – 11:06am, tdobbins

0 1 2 3 4 5 ORIGINAL SCALE IN INCHES FOR REDUCED PLANS

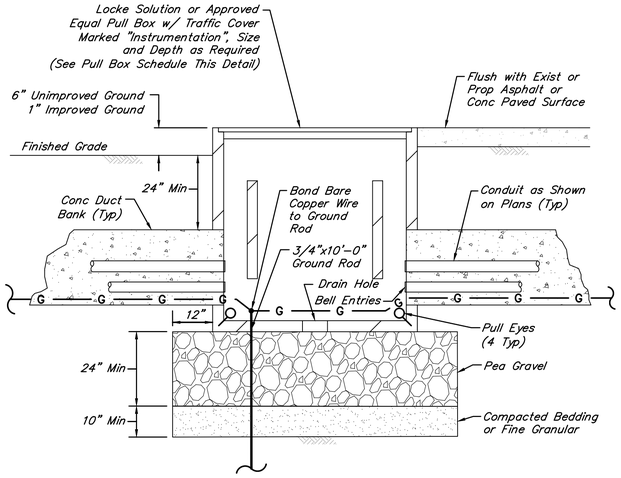

1 ELECTRICAL POWER PULL BOX DETAIL (EPB)
NOT TO SCALE

ELECTRICAL PULL BOX SCHEDULE	
No.	PULL BOX SIZE
EPB–1	(EXISTING)
EPB–2	(EXISTING)
EPB–3	(EXISTING)
EPB–4	(EXISTING)
EPB–5	(EXISTING)
EPB–6	(EXISTING)
EPB–7	(EXISTING)
EPB–8	3' x 3' x 3'
EPB–9	4' x 4' x 4'
EPB–10	3' x 3' x 3'
EPB–11	3' x 3' x 3'
EPB–12	3' x 3' x 3'

INSTRUMENTATION PULL BOX SCHEDULE	
No.	PULL BOX SIZE
IPB–1	(EXISTING)
IPB–2	(EXISTING)
IPB–3	(EXISTING)
IPB–4	(EXISTING)
IPB–5	(EXISTING)
IPB–6	(EXISTING)
IPB–7	(EXISTING)
IPB–8	3' x 3' x 3'
IPB–9	4' x 4' x 4'
IPB–10	4' x 4' x 4'
IPB–11	3' x 3' x 3'
IPB–12	3' x 3' x 3'

NOTES:

1. Whenever both Power and Instrumentation are contained within the same Pull Box, the Pull Box design shall conform to the Power Pull Box Detail.
2. Contractor shall size Pull Boxes per Manufacturer's recommendations.
3. Use inserts, unistruts, and cable saddles as required
4. All dimensions listed in this table are to interior walls.
5. Provide cable hook for support inside of each pull box and coil excess cable on hook.

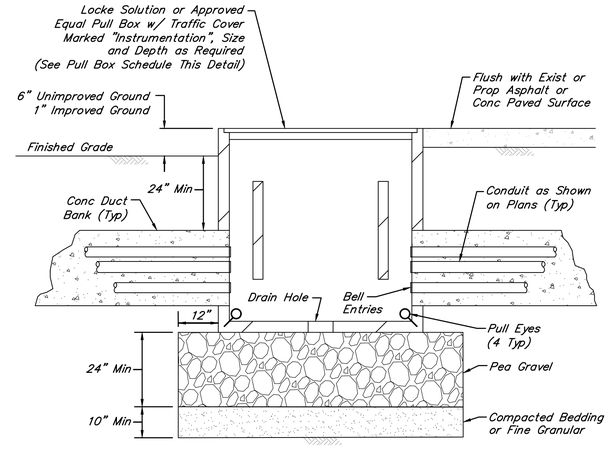

2 ELECTRICAL INSTRUMENTATION PULL BOX DETAIL (IPB)
NOT TO SCALE

NOTES:

1. Install conduit support on concrete base in between grating as required to support all proposed conduit.

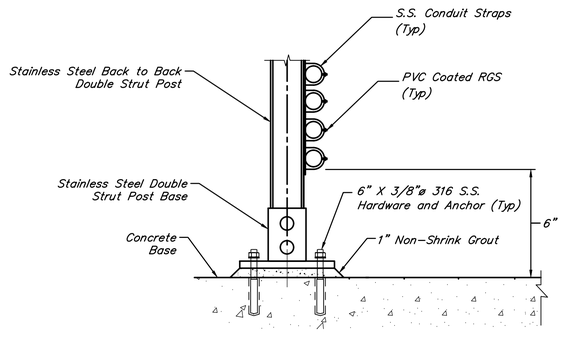

3 CONDUIT UNISTRUT MOUNTING DETAIL
NOT TO SCALE

NOTES:

1. Provide additional hooks as needed to support excess cable, kellum grip, and chains were applicable.

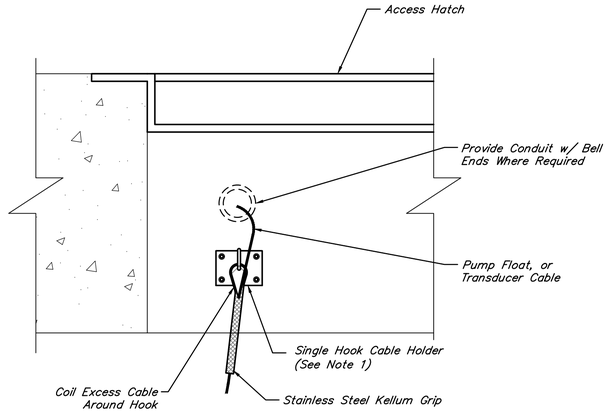

4 KELLUM GRIP AND CABLE HOLDER DETAIL
NOT TO SCALE

NOTES:

1. Installation of proposed local control panel, CT enclosure, and device mounting post shall match existing installations.

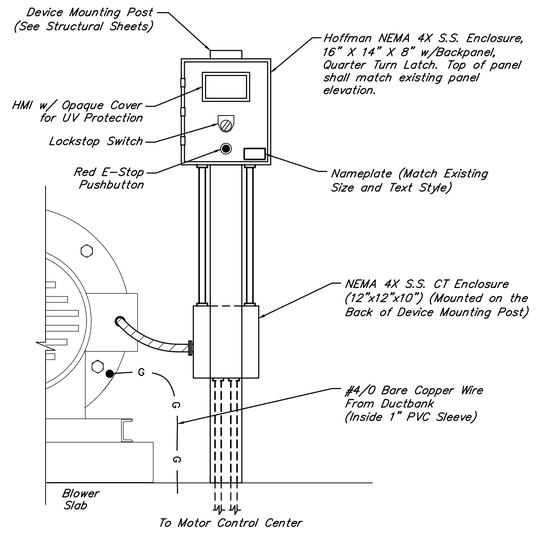

5 BLOWER LOCAL CONTROL PANEL INSTALLATION DETAIL
NOT TO SCALE

NO.	DATE	REVISIONS	APP.

WILBARGER CREEK M.U.D. No. 2
TRAVIS COUNTY, TEXAS

WASTEWATER TREATMENT PLANT EXPANSION TO 1.5 MGD

ELECTRICAL DETAILS – SHEET 2 OF 5

QUIDDITY
Texas Board of Professional Engineers and Land Surveyors Reg. No. F-23290
912 South Capital of Texas Hwy, Suite 300 • Austin, TX 78746 • 512.441.9493

SCALE:	NONE	DGN. BY:	EFLORES
DATE:	JUNE 2026	DWN. BY:	SSOMERS
JOB NO.	0A651–0021–02	DWG. NO.	
SUBMITTED:		SURV. BY:	
		F.B. NO.	

STATE OF TEXAS
BAO LE THIEN TRAN
149385
LICENSED PROFESSIONAL ENGINEER
07/01/2026

0–E–19
SHEET NO. 165 OF 230

C:\Users\JAS\DC\ACCDocs\Quiddity\0A651–0021–02 _ WILBARGER WWTP EXP. 1.5 MGD\Project Files\PLANS\ELEC–2.dwg, Jun 26, 2026 – 8:33am, JAS

0 1 2 3 4 5 ORIGINAL SCALE IN INCHES FOR REDUCED PLANS

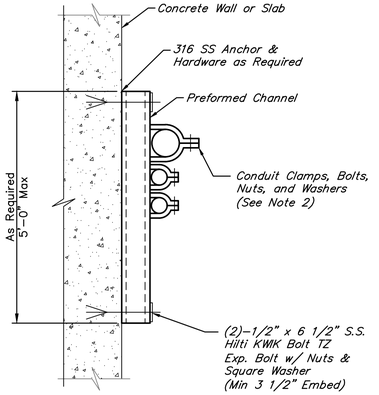

ELEVATION

CONDUIT SUPPORT NOTES:

1. This detail typical for both vertical and horizontal mounting.
2. Material for preformed channel, fittings, and clamps shall be as specified in section 16111.
3. Channels to be spaced at 5'-0" OC maximum.
4. All hardware and steel supports shall be 316 Stainless Steel.

1 CONDUIT SUPPORT
NOT TO SCALE

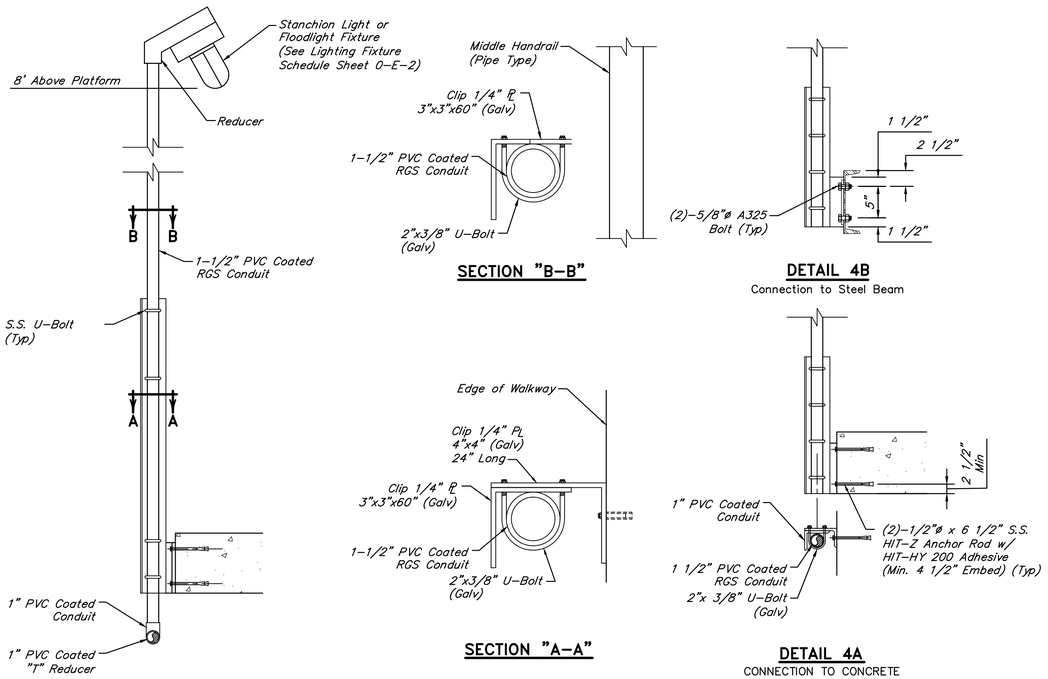

2 STANCHION LIGHT FIXTURE MOUNTING DETAIL
NOT TO SCALE

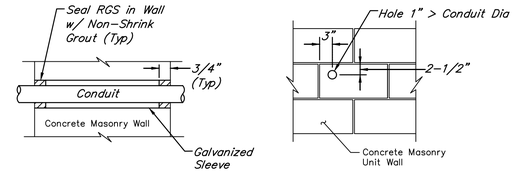

3 CONDUIT THROUGH MASONRY WALL DETAIL
NOT TO SCALE

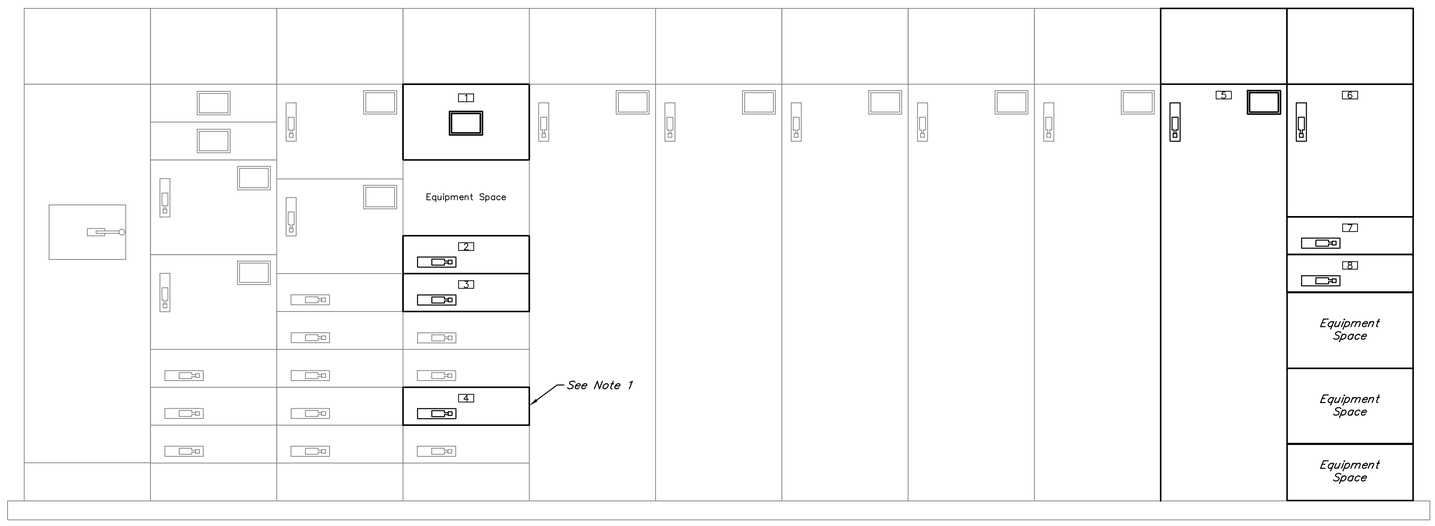

4 EXIST MOTOR CONTROL CENTER No. 1 (MCC-12-001) MODIFICATIONS
NOT TO SCALE

NOTES:

1. MCC bucket with 100A feeder breaker is existing. Contractor shall re-purpose bucket to feed Chemical Area Distribution Panelboard (DP-11-001) See OLD Sheet 0-E-14.

MCC NAMEPLATE SCHEDULE

No.	DESCRIPTION
1	COMMUNICATION SWITCH (ESW-12-001)
2	HEADWORKS CONTROL PANEL No. 2 (CP-03-002) FEEDER BREAKER
3	CLARIFIER No. 3 CONTROL PANEL (CP-06-301) FEEDER BREAKER
4	CHEMICAL DISTRIBUTION PANELBOARD (DP-11-001) FEEDER BREAKER
5	BLOWER No. 6 (MSB-09-601) SSRV STARTER
6	SWITCHBOARD No. 1 (SW-14-001) FEEDER BREAKER
7	PLUG VALVE (PV-03-005) FEEDER BREAKER
8	PLUG VALVE (PV-03-006) FEEDER BREAKER

CONSTRUCTION SEQUENCE NOTES:

1. Contractor shall minimize system downtime as much as possible during installation of proposed MCC sections and buckets. The maximum allowable downtime is 4 hours at a time and it is the responsibility of the Contractor to notify the Operator and Engineer in writing a minimum of 14 days prior to any scheduled shutdown. Contractor shall include, all relevant information including duration of shutdown and if multiple shutdowns are required. Contractor may not initiate shutdown without written approval from both the Operator and the Engineer.
2. Remove and relocate existing receptacle in conflict with proposed MCC sections. Provide additional conduit, conductors and mounting hardware as needed.
3. Finalize all conduit runs to the furthest extent possible without conflicting with proposed sections.
4. Install new MCC sections including SSRV and feeders for Blower No. 6, Dewatering Switchboard, and Plug Valves.
5. Perform modifications to existing section to tie in proposed buckets for Headworks, Clarifier and Communication Switch.

NO.	DATE	REVISIONS	APP.

WILBARGER CREEK M.U.D. No. 2
TRAVIS COUNTY, TEXAS

WASTEWATER TREATMENT PLANT EXPANSION TO 1.5 MGD

ELECTRICAL DETAILS – SHEET 3 OF 5

QUIDDITY
Texas Board of Professional Engineers and Land Surveyors Reg. No. F-23290
912 South Capital of Texas Hwy, Suite 300 • Austin, TX 78746 • 512.441.9493

SCALE: NONE
DATE: FEBRUARY 2026
JOB NO. 0A651-0021-02
SUBMITTED:
DGN. BY: EFLORES
DWN. BY: SSOMERS
DWG. NO.
SURV. BY:
F.B. NO.

STATE OF TEXAS
BAO LE THIEN TRAN
149385
LICENSED PROFESSIONAL ENGINEER
03/10/2026

0-E-20
SHEET NO. 166 OF 230

C:\Users\cgular\DC\ACCDocs\Quiddity - Water-\0A651-0021-02 _ WILBARGER WWTP EXP. 1.5 MGD\Project Files\PLANS\ELEC-2.dwg, Feb 19, 2026 - 5:27pm, cgular

0 1 2 3 4 5 ORIGINAL SCALE IN INCHES FOR REDUCED PLANS

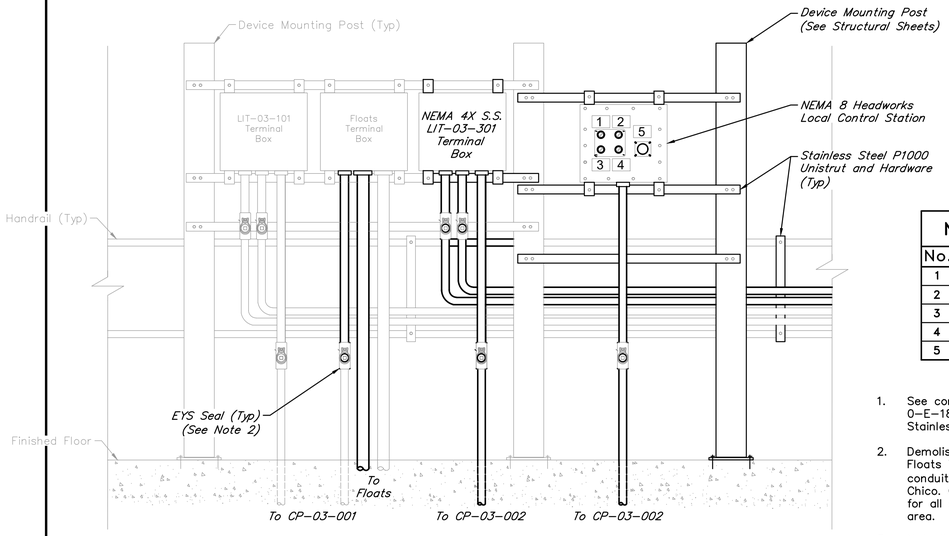

NAMEPLATE SCHEDULE	
No.	DESCRIPTION
1	MFS-03-101 HAND-OFF-AUTO
2	MFS-03-301 HAND-OFF-AUTO
3	WC-03-001 HAND-OFF-AUTO
4	WC-03-001 FWD-OFF-REV
5	EMERGENCY STOP

NOTES:

1. See conduit handrail mounting detail on Sheet 0-E-18. All mounting hardware shall be 316 Stainless Steel.
2. Demolish existing EYS seal and conduit section at Floats Terminal Box to pull new conductors per conduit schedule and install new EYS seal w/ Chico. Contractor to provide and install EYS seals for all conduits leaving and entering a hazardous area.
3. Not all conduits and wireways are shown for clarity. Refer to schedules, one-line diagram, and control schematics for conduit, wire size and quantity requirements.

1 HEADWORKS ELECTRICAL RACK ELEVATION DETAIL

NOT TO SCALE

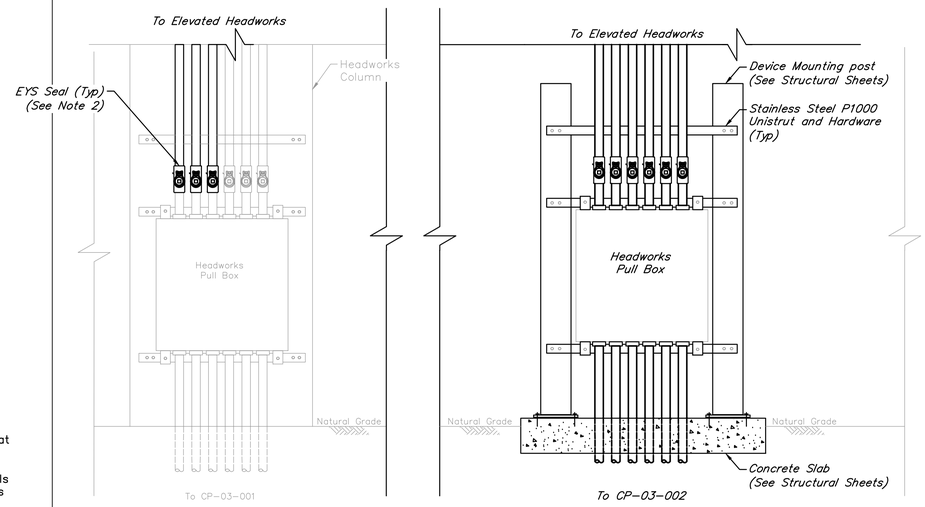

2 HEADWORKS PULL BOX MOUNTING DETAIL

NOT TO SCALE

NOTES:

1. All mounting hardware shall be 316 Stainless Steel.
2. Demolish existing EYS seals and conduit sections to pull new conductors per conduit schedule and install new EYS seal w/ Chico. Contractor to provide and install EYS seals for all conduits leaving and entering a hazardous area.
3. Not all conduits and wireways are shown for clarity. Refer to schedules, one-line diagram, and control schematics for conduit, wire size and quantity requirements.

NAMEPLATE SCHEDULE	
No.	DESCRIPTION
1	SCADA PANEL
2	LIGHTING CONTROL PANEL TERMINAL BOX

NOTES:

1. Not all conduits and wireways are shown for clarity. Refer to schedules, one-line diagram, and control schematics for conduit, wire size and quantity requirements.
2. All unistrut and mounting hardware shall be stainless steel.

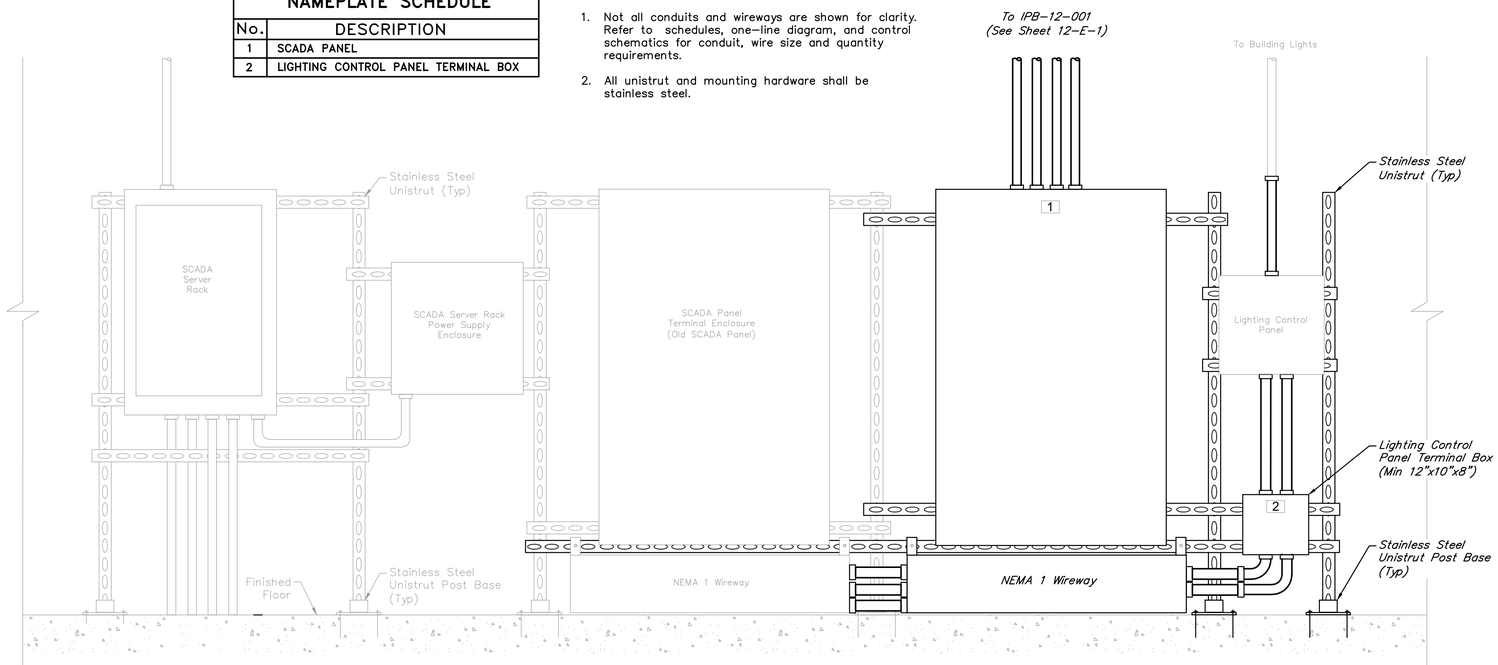

3 SCADA PANEL INSTALLATION ELEVATION DETAIL

NOT TO SCALE

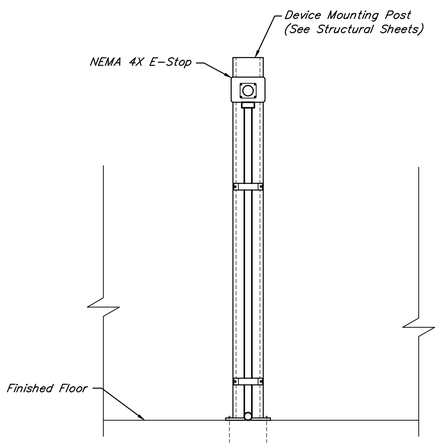

4 EMERGENCY STOP DETAIL

NOT TO SCALE

NO.	DATE	REVISIONS	APP.

WILBARGER CREEK M.U.D. No. 2
TRAVIS COUNTY, TEXAS

WASTEWATER TREATMENT PLANT
EXPANSION TO 1.5 MGD

ELECTRICAL DETAILS
– SHEET 4 OF 5

QUIDDITY
Texas Board of Professional Engineers and Land Surveyors Reg. No. F-23290
912 South Capital of Texas Hwy, Suite 300 • Austin, TX 78746 • 512.441.9493

SCALE:	NONE	DGN. BY:	EFLORES
DATE:	FEBRUARY 2026	DWN. BY:	SSOMERS
JOB NO.	0A651-0021-02	DWG. NO.	
SUBMITTED:		SURV. BY:	
		F.B. NO.	

STATE OF TEXAS
BAO LE THEN TRAN
149385
LICENSED PROFESSIONAL ENGINEER
03/10/2026

0-E-21
SHEET NO. 167 OF 230

C:\Users\cgular\DC\ACCDocs\Quiddity – Water-\0A651-0021-02 _ WILBARGER WWTP EXP. 1.5 MGD\Project Files\PLANS\ELEC-2.dwg, Feb 19, 2026 – 5:40pm, cgular

0 1 2 3 4 5 ORIGINAL SCALE IN INCHES FOR REDUCED PLANS

FLOODLIGHT NOTES:

1. All hardware to be stainless steel.
2. Use slipfitter for single fixture installation, use poletop bracket for two fixture installation (Appleton #G-PB-2).
3. Gutters and down spouts are not shown for clarity. Contractor to coordinate to ensure no conflict.

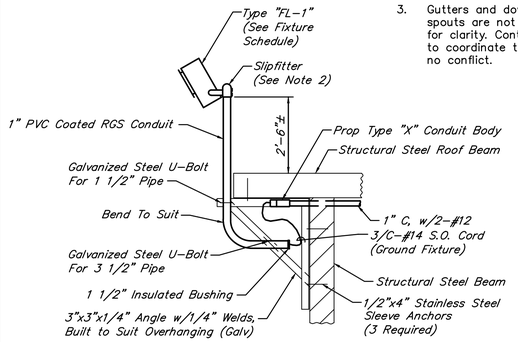

1 BUILDING FLOODLIGHT INSTALLATION
NOT TO SCALE

NOTES:

1. Provide new CSBE seals, EYS Seals, duct seal and additional terminal blocks and hardware as needed. See Lift Station Electrical Plan on Sheet 2-E-1 and Conduit Schedule.

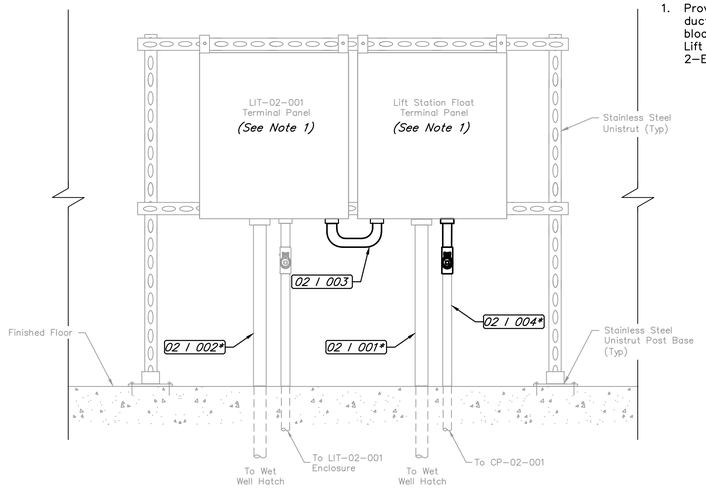

2 LIFT STATION TERMINAL BOX DETAIL
NOT TO SCALE

NOTES:

1. Provide new CSBE seals, EYS Seals, for any conduit enter/leaving hazardous area. See Headworks Electrical Plan on Sheet 3-E-1 and Conduit Schedule.

NAMEPLATE SCHEDULE	
No.	DESCRIPTION
1	PV-03-006 DISCONNECT SWITCH
2	PV-03-005 DISCONNECT SWITCH

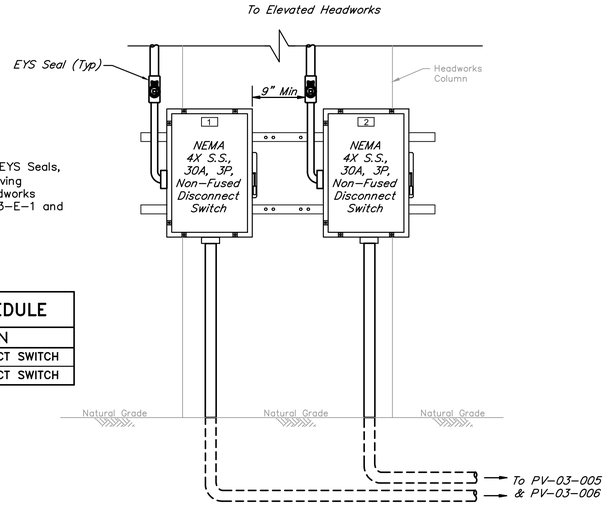

3 HEADWORKS PLUG VALVE DISCONNECT DETAIL
NOT TO SCALE

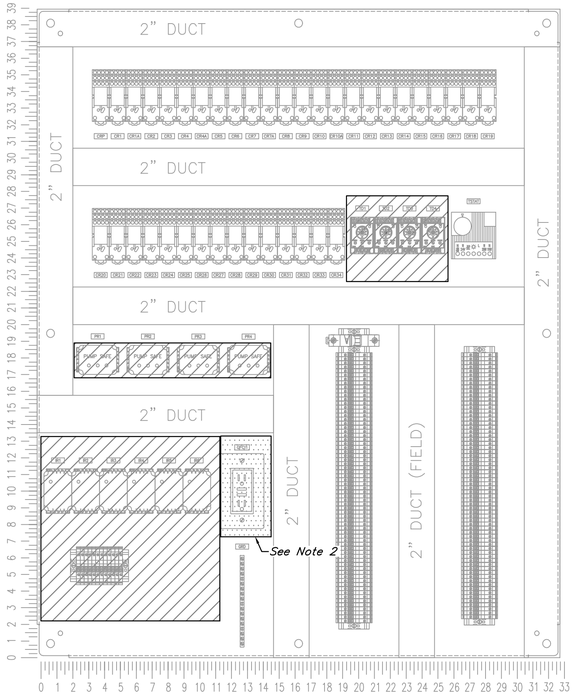

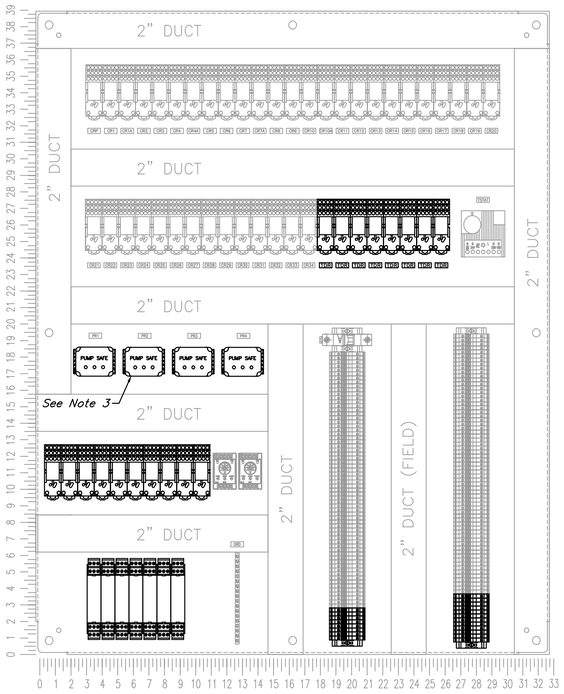

NOTES:

1. Swing out panel not shown for clarity. See Sheet 2-I-1 for modification to swing out panel.
2. Relocate to Proposed SCADA Panel.
3. Contractor may use door mounted PMR if more space is required.

LEGEND:

ITEMS TO BE DEMOLISHED (SEE ELECTRICAL DEMOLITION SPECIFICATION SECTION 16014)

ITEMS TO BE RELOCATED

4 LIFT STATION LOCAL PANEL MODIFICATIONS DETAIL
NOT TO SCALE

NO.	DATE	REVISIONS	APP.

WILBARGER CREEK M.U.D. No. 2
TRAVIS COUNTY, TEXAS

WASTEWATER TREATMENT PLANT EXPANSION TO 1.5 MGD

ELECTRICAL DETAILS – SHEET 5 OF 5

QUIDDITY
Texas Board of Professional Engineers and Land Surveyors Reg. No. F-23290
912 South Capital of Texas Hwy, Suite 300 • Austin, TX 78746 • 512.441.9493

SCALE: NONE
DATE: FEBRUARY 2026
JOB NO. 0A651-0021-02
SUBMITTED:
DGN. BY: EFLORES
DWN. BY: SSOMERS
DWG. NO.
SURV. BY:
F.B. NO.

STATE OF TEXAS
BAO LE THIEN TRAN
149385
LICENSED PROFESSIONAL ENGINEER
03/10/2026

0-E-22
SHEET NO. 168 OF 230

C:\Users\cgular\DC\ACCDocs\Quiddity - Water-\0A651-0021-02 _ WILBARGER WWTP EXP. 1.5 MGD\Project Files\PLANS\ELEC-2.dwg, Feb 19, 2026 - 5:44pm, cgular

0 1 2 3 4 5 ORIGINAL SCALE IN INCHES FOR REDUCED PLANS

ELECTRICAL HAZARDOUS AREA CLASSIFICATION TABLE FROM NFPA 820 - 2020 EDITION

Process Area No.	Area Name	NFPA 820 Reference	VentilationA,B,C, & D	NEC Electrical Classification d	NFPA Fire Protection Measures	Extent of Classified Area c	Notes
2	Onsite Lift Station	Table 4.2.2 Row 14 (a)	A	Class 1 Division 1/2, Group D	NR	Division 1: Entire room or space and 0.9 m (3 ft) radius from vent opening. Division 2: Envelope 0.5 m (1.5 ft) above grade extending 0.9 m (3 ft) from wet well opening and 1.5 m (5 ft) radius from vent opening.	
3	Elevated Headworks	Table 5.2.2 Row 2 (c)	Open to Atmosphere	Class 1 Division 2, Group D	FE, H	Within a 3 m (10 ft) envelope around equpment and open channel	
4	Peak Shaving Basin	Table 5.2.2 Row 8	Open to Atmosphere	Class 1 Division 2, Group D	H	Interior of the tank from the minimum operating water surface to the top of the tank wall; envelope 0.5 m (1.5 ft) above the top of the tank and extending 0.5 m (1.5 ft) beyond the exterior wall; envelope 0.5 m (1.5 ft) above grade extending 3 m (10 ft) horizontally from the exterior tank walls.	
5	Aeration Basins	Table 5.2.2 Row 8	Open to Atmosphere	Class 1 Division 2, Group D	H	Interior of the tank from the minimum operating water surface to the top to the tank wall; envelope 0.5 m (1.5 ft) above the top of the tank and extending 0.5 m (1.5 ft) beyond the exterior wall; envelope 0.5 m (1.5 ft) above grade extending 3 m (10 ft) horizontally from the exterior tank walls.	
6	Clarifiers	Table 6.2.2 Row 8 (d)	Open to Atmosphere	Class 1 Division 2, Group D	FE, H	Interior of the tank from the minimum operating water surface to the top to the tank wall; envelope 0.5 m (1.5 ft) above the top of the tank and extending 0.5 m (1.5 ft) beyond the exterior wall; envelope 0.5 m (1.5 ft) above grade extending 3 m (10 ft) horizontally from the exterior tank walls.	
7	Tertiary Filters	Table 5.2.2 Row 22	NR	Unclassified	H	N/A	
8	Chlorine Contact Basin	Table 5.2.2 Row 19	NR	Unclassified	H	N/A	
9	Blowers	N/A	N/A	Unclassified	N/A	N/A	
10	Non-Potable Water System	N/A	N/A	Unclassified	N/A	N/A	
11	Chemical System Building	N/A	N/A	Unclassified	N/A	N/A	
12	Electrical Building	N/A	N/A	Unclassified	N/A	N/A	
13	Aerated Sludge Holding Tanks	Table 6.2.2 Row 10 (c)	Open to Atmosphere	Class 1 Division 2, Group D	NR	Interior of the tank from the minimum operating water surface to the top to the tank wall; envelope 0.5 m (1.5 ft) above the top of the tank and extending 0.5 m (1.5 ft) beyond the exterior wall; envelope 0.5 m (1.5 ft) above grade extending 3 m (10 ft) horizontally from the exterior tank walls.	
14	Dewatering Building	Table 6.2.2 Row 12 (b)	C	Unclassified	H, FE and FAS	N/A	

Area Classification Legend

A	No ventilation or ventilated less than 12 air changes per hour
B	Continuously ventilated at 12 air changes per hour
C	Continuously ventilated at 6 air changes per hour
CGD	Combustible gas detection system
D	No ventilation or ventilated less than 6 air changes per hour
FDS	Fire detection system
FE	Portable fire extinguisher
FAS	Fire Alarm System
FSS	Fire suppression system
H	Hydrant protection
N/A	Not Applicable
NNV	Not normally ventilated
NR	No requirement
NC	Noncombustible Material
LC	Limited-combustible Material
LFS	Low-flame Spread Index Material

Area Classification Notes

a	The "Row" and "Line" columns are used to refer to specific figures in A.5.2 and specific requirements for each location and function.
b	This column indicates the ventilation requirements for processes. Additional ventilation requirements are provided in Chapter 9. Ventilation signaling and alarm requirements are provided in Chapter 7.
c	Open channels and open structures upstream from the unit processes are classed the same as the downstream processes they supply.
d	These unit processes use corrosive chemicals that can have deteriorating effect on conductors and equipment. Electrical equipment should be identified for use in the operating environment.
e	This column indicates the materials of construction for processes. Materials of construction for buildings in which these processes are housed are in accordance with the applicable building code and construction requirements provided in Chapter 8
f	The area beyond the envelope is unclassified.
g	Where liquid turbulence is not induced by aeration or other factors, the following criteria apply: (1) interior of the tank from the minimum operating water surface to the top of the tank wall; (2) envelop 0.46 m (18 in.) above the top of the tank and extending 0.46 m (18 in.) beyond the exterior wall; (3) envelop 0.46 m (18 in.) above grade extending 3m (10 ft) horizontally from the exterior tank walls.

NO.	DATE	REVISIONS	APP.

WILBARGER CREEK M.U.D. No. 2
TRAVIS COUNTY, TEXAS

WASTEWATER TREATMENT PLANT EXPANSION TO 1.5 MGD

ELECTRICAL HAZARDOUS AREA CLASSIFICATION

QUIDDITY
Texas Board of Professional Engineers and Land Surveyors Reg. No. F-23290
912 South Capital of Texas Hwy, Suite 300 • Austin, TX 78746 • 512.441.9493

SCALE: NONE
DATE: FEBRUARY 2026
JOB NO. 0A651-0021-02
SUBMITTED:
DGN. BY: EFLORES
DWN. BY: SSOMERS
DWG. NO.
SURV. BY:
F.B. NO.

STATE OF TEXAS
BAO LE THIEN TRAN
149385
LICENSED PROFESSIONAL ENGINEER
03/10/2026

0-E-23
SHEET NO. 169 OF 230

C:\Users\cgular\DC\ACCDocs\Quiddity – Water–\0A651–0021–02 _ WILBARGER WWTP EXP. 1.5 MGD\Project Files\PLANS\ELEC–2.dwg, Feb 18, 2026 – 4:35pm, cgular

0 1 2 3 4 5 ORIGINAL SCALE IN INCHES FOR REDUCED PLANS



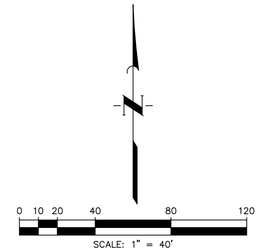

No.	DESCRIPTION		
1	PRESS FEED PUMPS	9	BLOWERS
2	LIFT STATION	10	CLARIFIERS
3	HEADWORKS	11	SLUDGE HOLDING TANK
4	PEAK SHAVING BASIN	12	TERTIARY FILTERS
5	PEAK SHAVING BASIN PUMP STATION	13	CHLORINE CONTACT BASIN
6	ELECTRICAL BUILDING	14	CHEMICAL STORAGE AREA
7	GENERATOR	15	NPW PUMP STATION
8	AERATION BASINS	16	DEWATERING FACILITY

LEGEND:

- HAZARDOUS CLASSIFIED LOCATION (SEE SHEET 0-E-23)
- EXISTING DUCTBANK
- EXISTING DUCTBANK WITH PROPOSED CONDUCTORS
- PROPOSED DUCTBANK

NO.	DATE	REVISIONS	APP.

WILBARGER CREEK M.U.D. No. 2
TRAVIS COUNTY, TEXAS

WASTEWATER TREATMENT PLANT
EXPANSION TO 1.5 MGD

ELECTRICAL OVERALL SITE PLAN

QUIDDITY
Texas Board of Professional Engineers and Land Surveyors Reg. No. F-23290
912 South Capital of Texas Hwy, Suite 300 • Austin, TX 78746 • 512.441.9493

SCALE:	1"=40'	DGN. BY:	EFLORES
DATE:	FEBRUARY 2026	DWN. BY:	JSTRUHAR
JOB NO.	0A651-0021-02	DWG. NO.	
SUBMITTED:		SURV. BY:	
		F.B. NO.	

STATE OF TEXAS
BAO LE THIEN TRAN
149385
LICENSED PROFESSIONAL ENGINEER
03/10/2026

0-E-24
SHEET NO. 170 OF 230

C:\Users\JAS\DC\ACCDocs\Quiddity\0A651-0021-02 _ WILBARGER WWTP EXP. 1.5 MGD\Project Files\PLANS\ELEC SITE PLANS.dwg, Feb 18, 2026 - 5:59pm, cgular

0 1 2 3 4 5 ORIGINAL SCALE IN INCHES FOR REDUCED PLANS

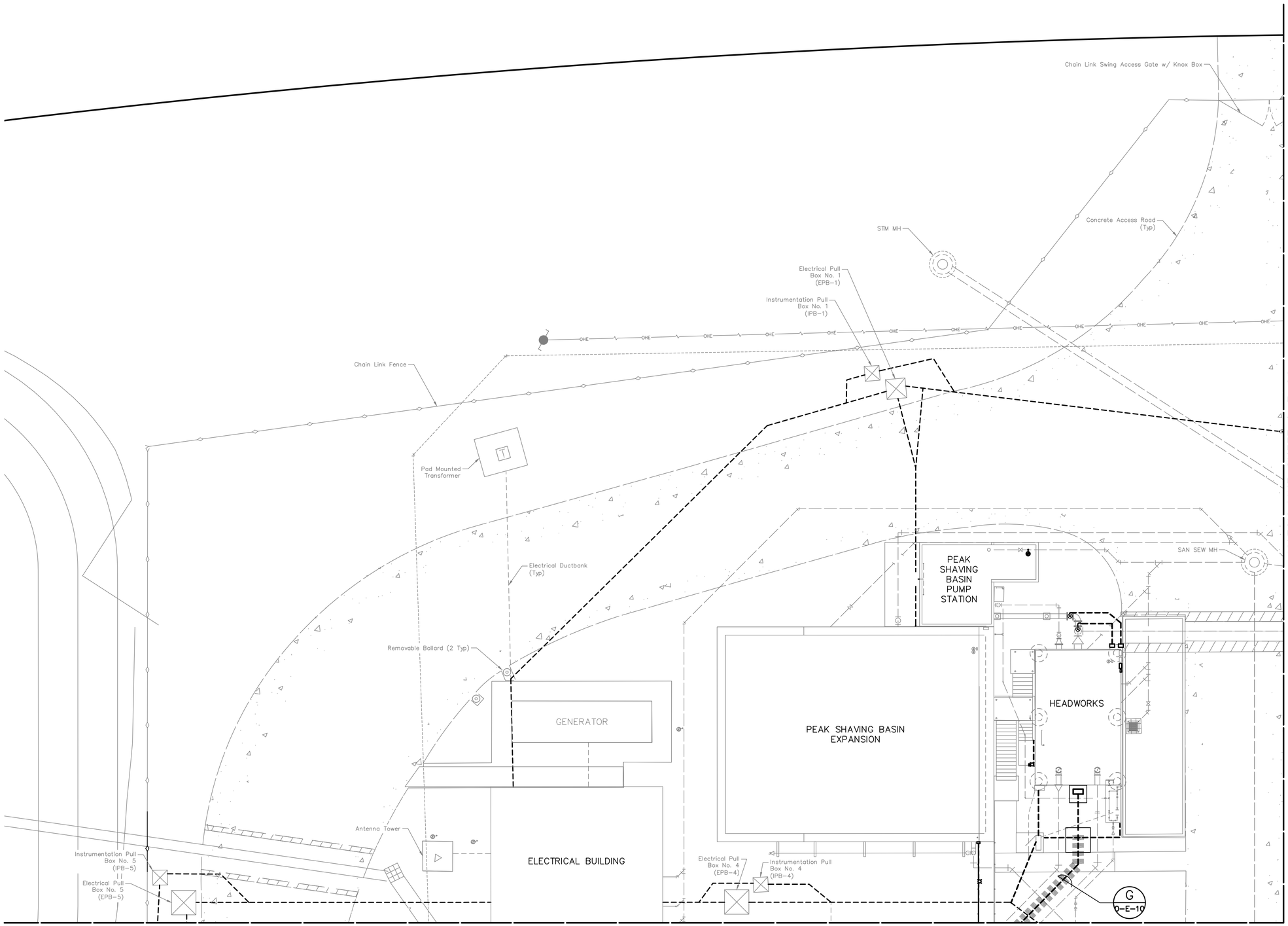

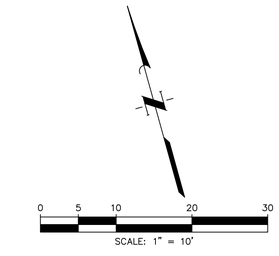

LEGEND:

- EXISTING DUCTBANK
- EXISTING DUCTBANK WITH PROPOSED CONDUCTORS
- PROPOSED DUCTBANK

NO.	DATE	REVISIONS	APP.

WILBARGER CREEK M.U.D. No. 2
TRAVIS COUNTY, TEXAS

WASTEWATER TREATMENT PLANT EXPANSION TO 1.5 MGD

ELECTRICAL SITE PLAN – SHEET 1 OF 6

QUIDDITY
Texas Board of Professional Engineers and Land Surveyors Reg. No. F-23290
912 South Capital of Texas Hwy, Suite 300 • Austin, TX 78746 • 512.441.9493

SCALE:	1"=10'	DGN. BY:	EFLORES
DATE:	FEBRUARY 2026	DWN. BY:	JSTRUHAR
JOB NO.	0A651-0021-02	DWG. NO.	
SUBMITTED:		SURV. BY:	
		F.B. NO.	

STATE OF TEXAS
BAO LE THIEN TRAN
149385
LICENSED PROFESSIONAL ENGINEER
03/10/2026

0-E-25
SHEET NO. 171 OF 230

C:\Users\JAS\DC\ACCDocs\Quiddity\0A651-0021-02 _ WILBARGER WWTP EXP. 1.5 MGD\Project Files\PLANS\ELEC SITE PLANS.dwg, Feb 18, 2026 – 6:03pm, JAS

0 1 2 3 4 5 ORIGINAL SCALE IN INCHES FOR REDUCED PLANS

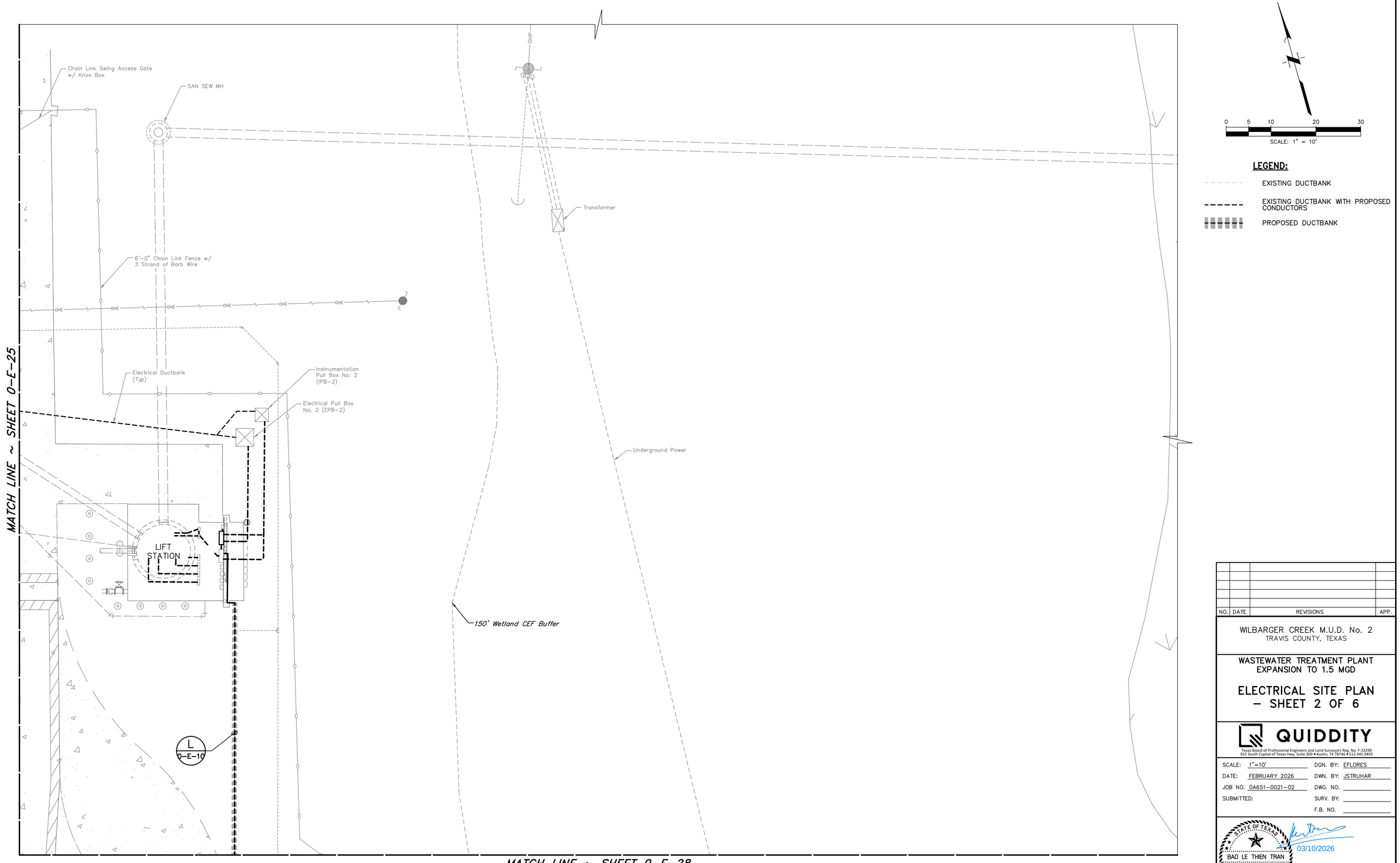

0 5 10 20 30
SCALE: 1" = 10'

LEGEND:

- EXISTING DUCTBANK
- EXISTING DUCTBANK WITH PROPOSED CONDUCTORS
- PROPOSED DUCTBANK

NO.	DATE	REVISIONS	APP.

WILBARGER CREEK M.U.D. No. 2
TRAVIS COUNTY, TEXAS

WASTEWATER TREATMENT PLANT
EXPANSION TO 1.5 MGD

ELECTRICAL SITE PLAN – SHEET 2 OF 6

QUIDDITY
Texas Board of Professional Engineers and Land Surveyors Reg. No. F-23290
912 South Capital of Texas Hwy, Suite 300 • Austin, TX 78746 • 512.441.9493

SCALE:	1"=10'	DGN. BY:	EFLORES
DATE:	FEBRUARY 2026	DWN. BY:	JSTRUHAR
JOB NO.	0A651-0021-02	DWG. NO.	
SUBMITTED:		SURV. BY:	
		F.B. NO.	

STATE OF TEXAS
BAO LE THEN TRAN
149385
LICENSED PROFESSIONAL ENGINEER
03/10/2026

0-E-26
SHEET NO. 172 OF 230

C:\Users\cguior\DC\ACCDocs\Quiddity – Water-\0A651-0021-02 _ WILBARGER WWTP EXP. 1.5 MGD\Project Files\PLANS\ELEC SITE PLANS.dwg, Feb 19, 2026 – 5:55pm, JAS

0 1 2 3 4 5 ORIGINAL SCALE IN INCHES FOR REDUCED PLANS

MATCH LINE SHEET 0-E-25

Instrumentation Pull Box No. 9 (IPB-9)

Electrical Pull Box No. 9 (EPB-9)

A 0-E-10 | F 0-E-10 | G 0-E-10 | H 0-E-10 | B 0-E-10 | A 0-C-23

Instrumentation Pull Box No. 8 (IPB-8)

Electrical Pull Box No. 8 (EPB-8)

6'-0" Chain Link Fence w/ 3 Strand of Barb Wire

C 0-E-10

Concrete Access Road (Typ)

AERATION BASIN No. 3

AERATION BASIN No. 2

AERATION BASIN No. 1

BLOWERS

SAN SEW MH

Concrete Access Road (Typ)

CLARIFIER No. 3

CLARIFIER No. 2

CLARIFIER No. 1

D 0-E-10

Chain Link Swing Access Gate

E 0-E-10

STM SEW Inlet

SAN SEW MH

Instrumentation Pull Box No. 6 (IPB-6)

Electrical Pull Box No. 6 (EPB-6)

TERTIARY FILTERS

MATCH LINE SHEET 0-E-29

MATCH LINE SHEET 0-E-28

0 5 10 20 30

SCALE: 1" = 10'

LEGEND:

- HAZARDOUS CLASSIFIED LOCATION (SEE SHEET 0-E-23)
- EXISTING DUCTBANK
- EXISTING DUCTBANK WITH PROPOSED CONDUCTORS
- PROPOSED DUCTBANK

NO.	DATE	REVISIONS	APP.

WILBARGER CREEK M.U.D. No. 2
TRAVIS COUNTY, TEXAS

WASTEWATER TREATMENT PLANT EXPANSION TO 1.5 MGD

ELECTRICAL SITE PLAN – SHEET 3 OF 6

QUIDDITY
Texas Board of Professional Engineers and Land Surveyors Reg. No. F-23290
912 South Capital of Texas Hwy, Suite 300 • Austin, TX 78746 • 512.441.9493

SCALE: 1"=10'
DATE: MARCH 2026
JOB NO. 0A651-0021-02
SUBMITTED:
DGN. BY: EFLORES
DWN. BY: JSTRUHAR
DWG. NO.
SURV. BY:
F.B. NO.

STATE OF TEXAS
BAO LE THEN TRAN
149385
LICENSED PROFESSIONAL ENGINEER
03/10/2026

0-E-27
SHEET NO. 173 OF 230

C:\Users\tdobbins\DC\ACCDocs\Quiddity - Water-\0A651-0021-02 _ WILBARGER WWTP EXP. 1.5 MGD\Project Files\PLANS\ELEC SITE PLANS.dwg, Mar 10, 2026 - 11:07am, tdobbins

0 1 2 3 4 5 ORIGINAL SCALE IN INCHES FOR REDUCED PLANS

MATCH LINE SHEET 0-E-26

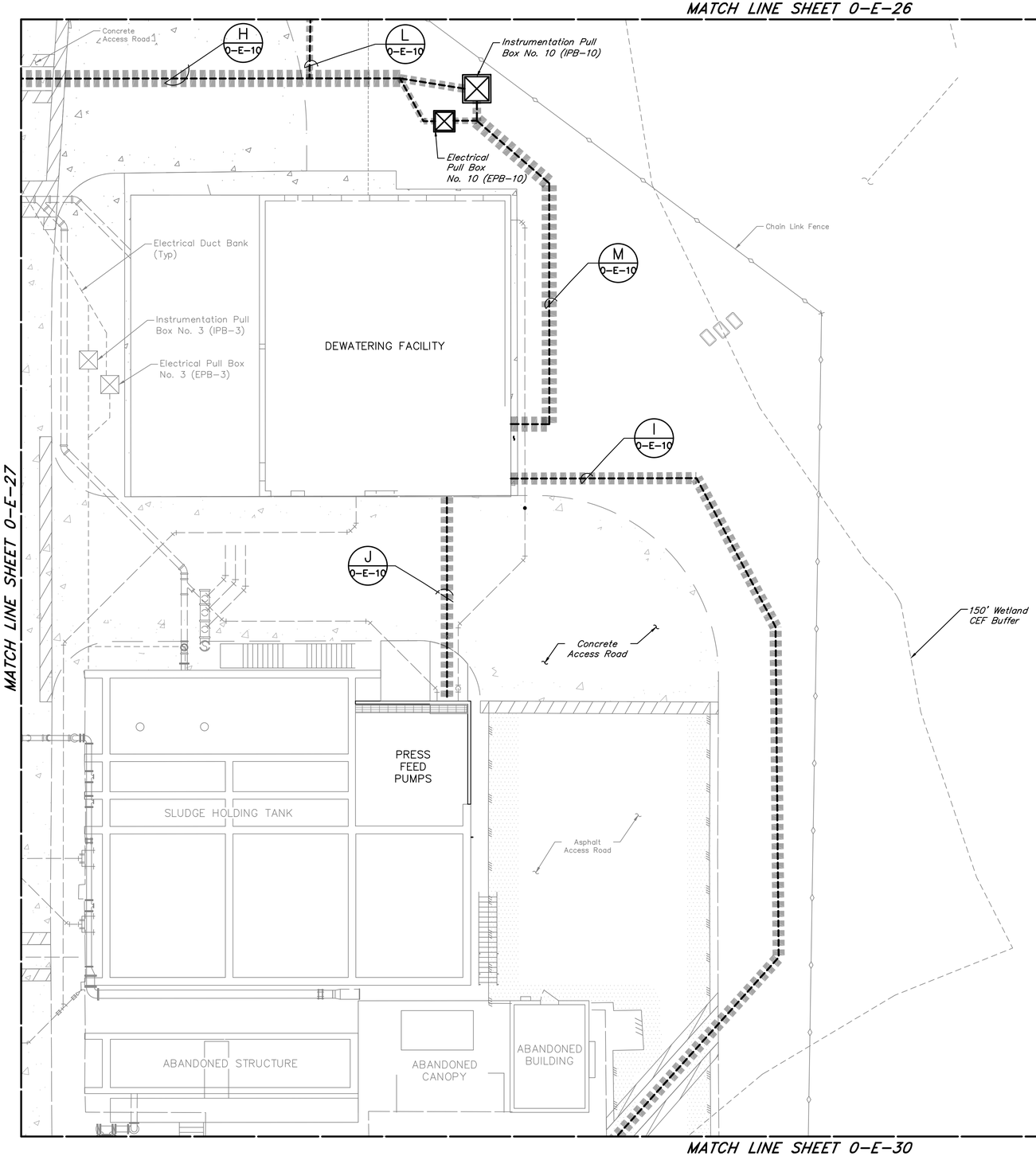

MATCH LINE SHEET 0-E-27

MATCH LINE SHEET 0-E-30

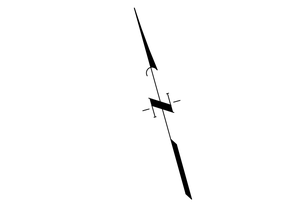

LEGEND:

- EXISTING DUCTBANK
- EXISTING DUCTBANK WITH PROPOSED CONDUCTORS
- PROPOSED DUCTBANK

NO.	DATE	REVISIONS	APP.

WILBARGER CREEK M.U.D. No. 2
TRAVIS COUNTY, TEXAS

WASTEWATER TREATMENT PLANT
EXPANSION TO 1.5 MGD

ELECTRICAL SITE PLAN – SHEET 4 OF 6

QUIDDITY
Texas Board of Professional Engineers and Land Surveyors Reg. No. F-23290
912 South Capital of Texas Hwy, Suite 300 • Austin, TX 78746 • 512.441.9493

SCALE: 1"=10' DGN. BY: EFLORES
DATE: FEBRUARY 2026 DWN. BY: JSTRUHAR
JOB NO. 0A651-0021-02 DWG. NO.
SUBMITTED: SURV. BY:
F.B. NO.

STATE OF TEXAS
BAO LE THIEN TRAN
149385
LICENSED PROFESSIONAL ENGINEER
03/10/2026

0-E-28
SHEET NO. 174 OF 230

C:\Users\JAS\DC\ACCDocs\Quiddity\0A651-0021-02 _ WILBARGER WWTP EXP. 1.5 MGD\Project Files\PLANS\ELEC SITE PLANS.dwg, Feb 18, 2026 - 6:24pm, JAS

0 1 2 3 4 5 ORIGINAL SCALE IN INCHES FOR REDUCED PLANS

MATCH LINE SHEET 0-E-27

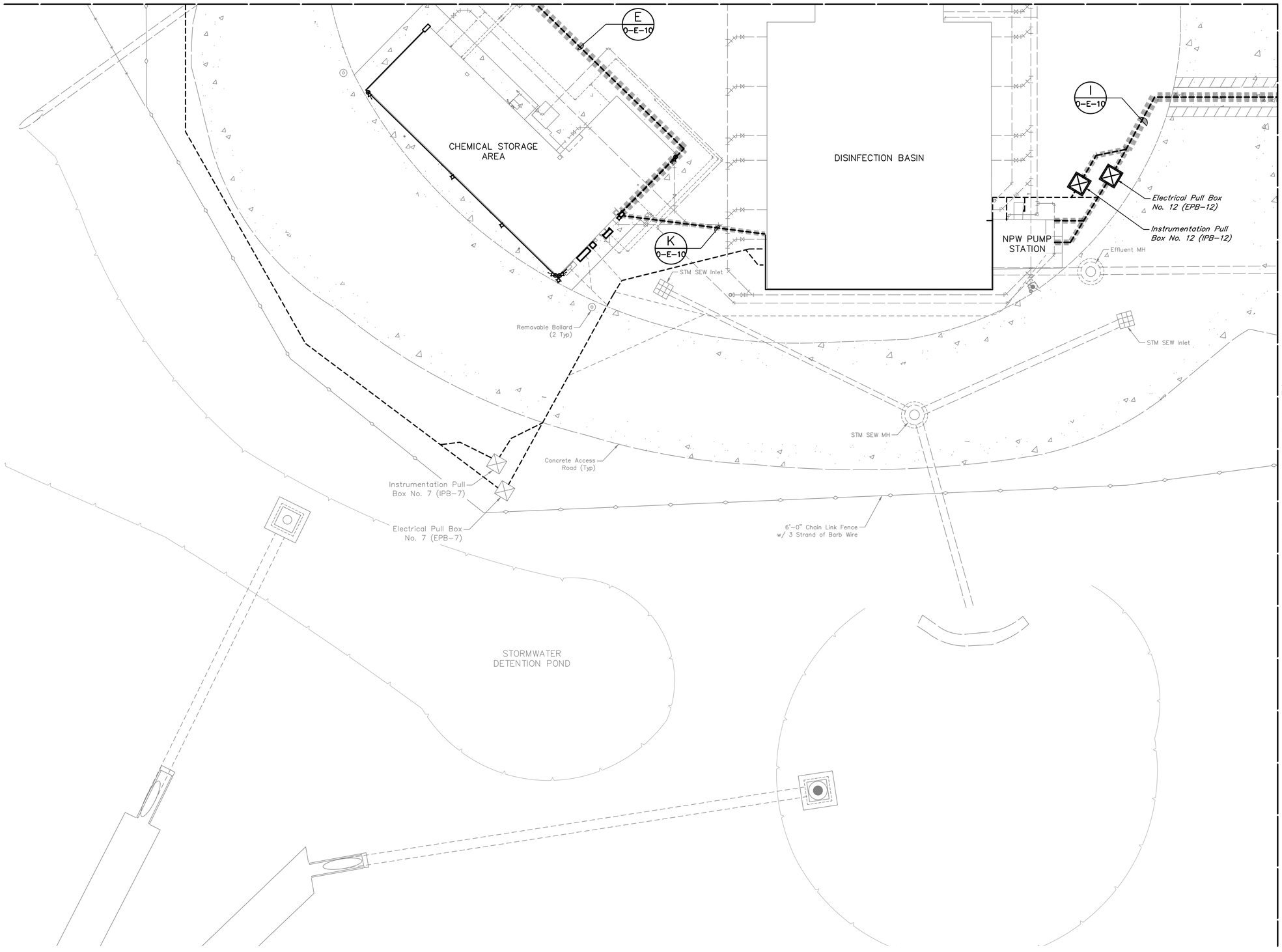

MATCH LINE SHEET 0-E-30

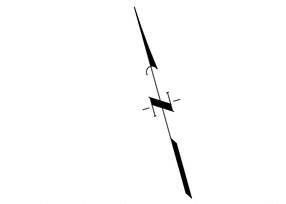

LEGEND:

- EXISTING DUCTBANK
- EXISTING DUCTBANK WITH PROPOSED CONDUCTORS
- PROPOSED DUCTBANK

NO.	DATE	REVISIONS	APP.

WILBARGER CREEK M.U.D. No. 2
TRAVIS COUNTY, TEXAS

WASTEWATER TREATMENT PLANT
EXPANSION TO 1.5 MGD

ELECTRICAL SITE PLAN – SHEET 5 OF 6

QUIDDITY
Texas Board of Professional Engineers and Land Surveyors Reg. No. F-23290
912 South Capital of Texas Hwy, Suite 300 • Austin, TX 78746 • 512.441.9493

SCALE: 1"=10'	DGN. BY: EFLORES
DATE: FEBRUARY 2026	DWN. BY: JSTRUHAR
JOB NO. 0A651-0021-02	DWG. NO.
SUBMITTED:	SURV. BY:
	F.B. NO.

STATE OF TEXAS
BAO LE THIEN TRAN
149385
LICENSED PROFESSIONAL ENGINEER
03/10/2026

0-E-29
SHEET NO. 175 OF 230

C:\Users\cgular\DC\ACCDocs\Quiddity – Water-\0A651-0021-02 _ WILBARGER WWTP EXP. 1.5 MGD\Project Files\PLANS\ELEC SITE PLANS.dwg, Feb 19, 2026 – 6:14pm, cgular

0 1 2 3 4 5 ORIGINAL SCALE IN INCHES FOR REDUCED PLANS

MATCH LINE SHEET 0-E-28

MATCH LINE SHEET 0-E-29

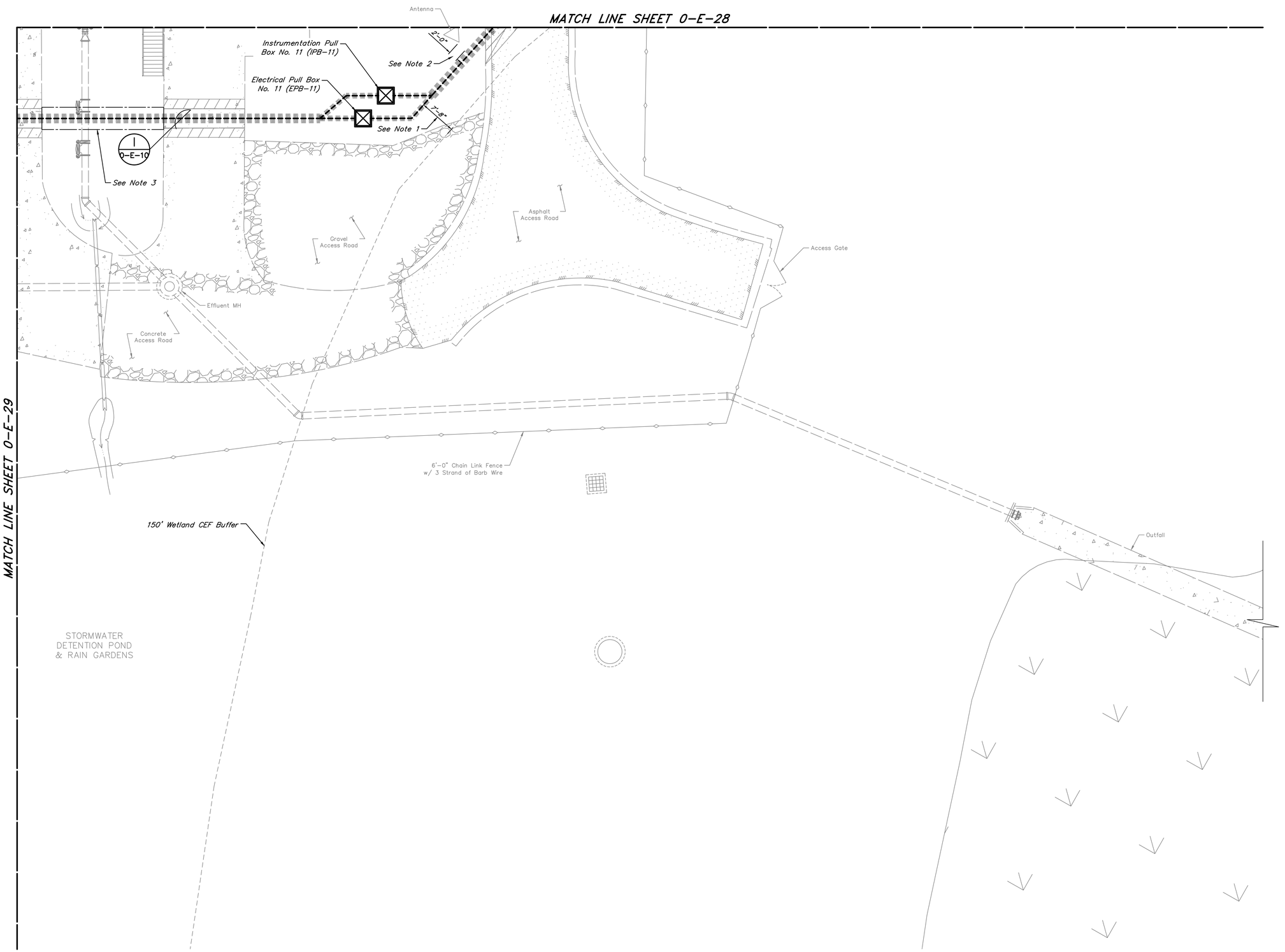

0 5 10 20 30
SCALE: 1" = 10'

LEGEND:

- EXISTING DUCTBANK
- EXISTING DUCTBANK WITH PROPOSED CONDUCTORS
- PROPOSED DUCTBANK

NOTE:

1. Contractor shall maintain a minimum clearance of 7 feet between edge of proposed duct bank and 150ft Wetland CEF Buffer.
2. Contractor shall maintain a minimum clearance of 2 feet between edge of proposed duct bank and exist antenna foundation.
3. Contractor may maintain a minimum of 1'-6" cover over ductbank in area crossing existing 18" PVC-STM to avoid conflict. Maintain a minimum of 9" clearance between ductbank and pipe.

NO.	DATE	REVISIONS	APP.

WILBARGER CREEK M.U.D. No. 2
TRAVIS COUNTY, TEXAS

WASTEWATER TREATMENT PLANT
EXPANSION TO 1.5 MGD

ELECTRICAL SITE PLAN - SHEET 6 OF 6

QUIDDITY
Texas Board of Professional Engineers and Land Surveyors Reg. No. F-23290
912 South Capital of Texas Hwy, Suite 300 • Austin, TX 78746 • 512.441.9493

SCALE:	1"=10'	DGN. BY:	EFLORES
DATE:	FEBRUARY 2026	DWN. BY:	JSTRUHAR
JOB NO.	0A651-0021-02	DWG. NO.	
SUBMITTED:		SURV. BY:	
		F.B. NO.	

STATE OF TEXAS
BAO LE THIEN TRAN
149385
LICENSED PROFESSIONAL ENGINEER
03/10/2026

0-E-30
SHEET NO. 176 OF 230

C:\Users\cgular\DC\ACCDocs\Quiddity - Water-\0A651-0021-02 _ WILBARGER WWTP EXP. 1.5 MGD\Project Files\PLANS\ELEC SITE PLANS.dwg, Feb 19, 2026 - 6:16pm, cgular

ORIGINAL SCALE IN INCHES FOR REDUCED PLANS

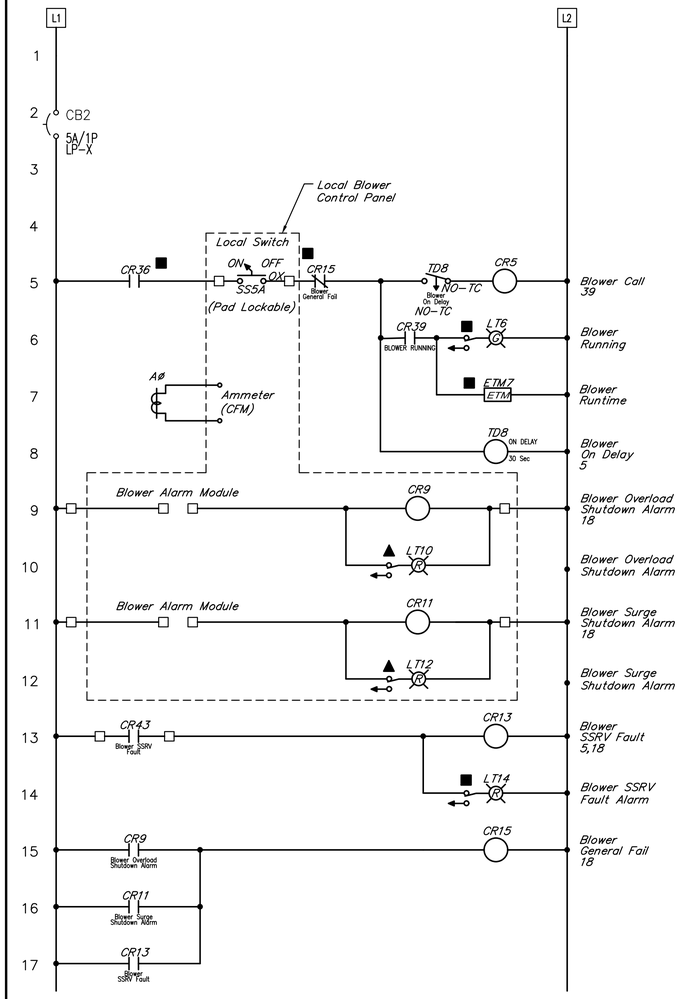

TYPICAL BLOWER CONTROL DIAGRAM

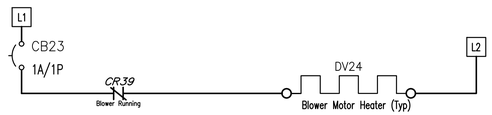

BLOWER SPACE HEATER CONTROL DIAGRAM

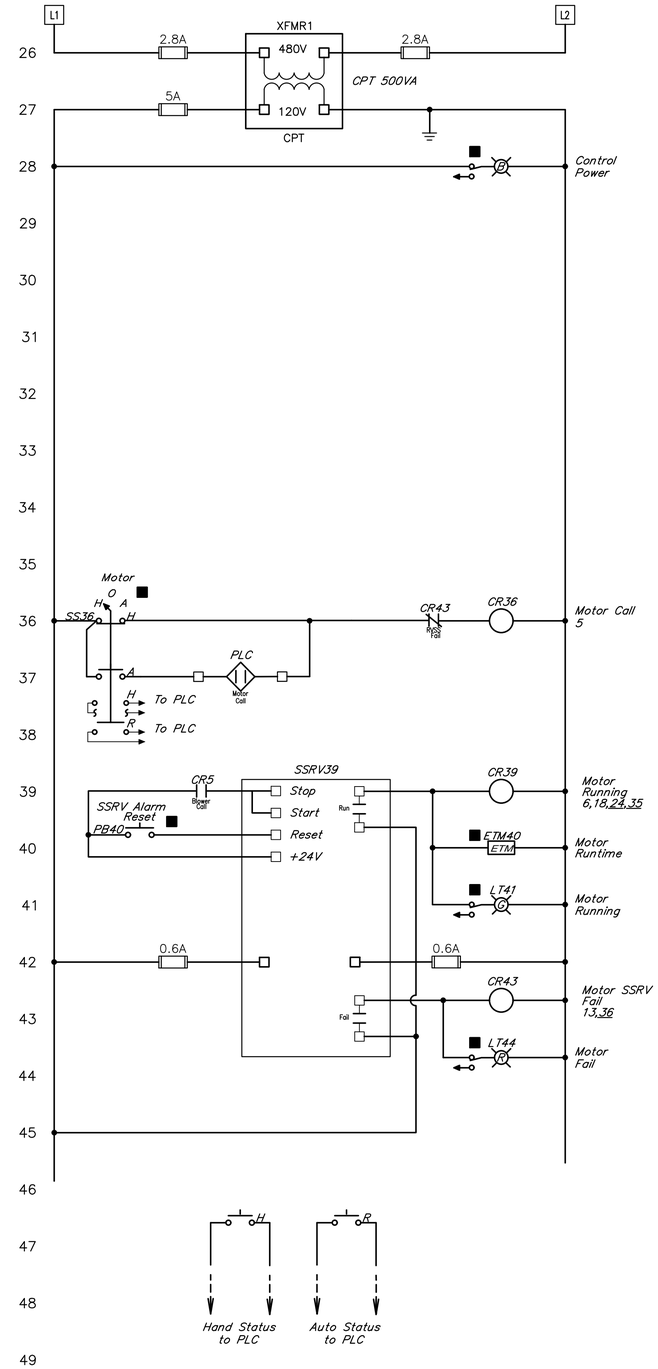

TYPICAL SSRV CONTROL DIAGRAM

NOTE:
Blower control diagram is represented with the minimal indication required. Contractor should attempt to match existing. Using an HMI in place of pilot lights for local indication is acceptable.

NOTE:
SSRV control diagram is represented with the minimal components required. Contractor should attempt to match existing. Use of a shorting (bypass) contactor in addition to the SSRV is acceptable.

NO.	DATE	REVISIONS	APP.

WILBARGER CREEK M.U.D. No. 2
TRAVIS COUNTY, TEXAS

WASTEWATER TREATMENT PLANT
EXPANSION TO 1.5 MGD

BLOWER CONTROL SYSTEM

QUIDDITY
Texas Board of Professional Engineers and Land Surveyors Reg. No. F-23290
912 South Capital of Texas Hwy, Suite 300 • Austin, TX 78746 • 512.441.9493

SCALE: NONE	DGN. BY: JJJOHN
DATE: JUNE 2026	DWN. BY: CGULAR
JOB NO. 0A651-0021-02	DWG. NO.
SUBMITTED:	SURV. BY:
	F.B. NO.

STATE OF TEXAS
JOEL J. JOHN
116778
LICENSED PROFESSIONAL ENGINEER
07/01/2026

0-E-31
SHEET NO. 177 OF 230

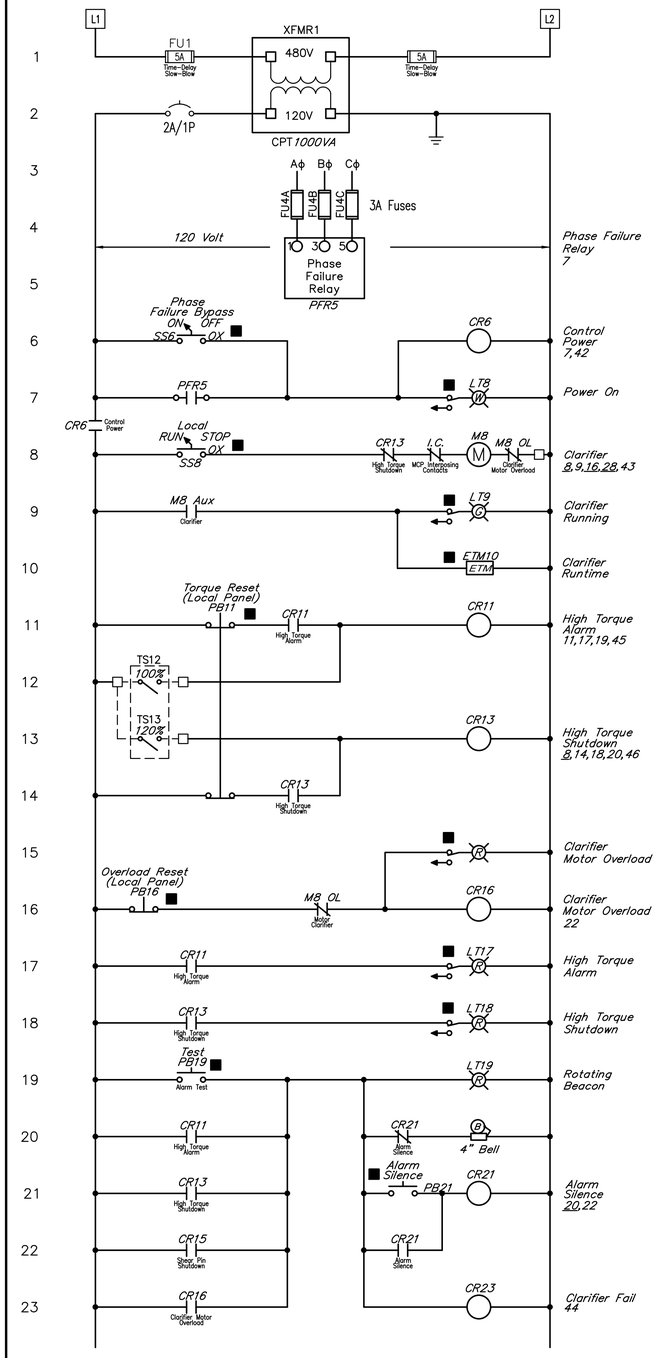

CLARIFIER CONTROL DIAGRAM

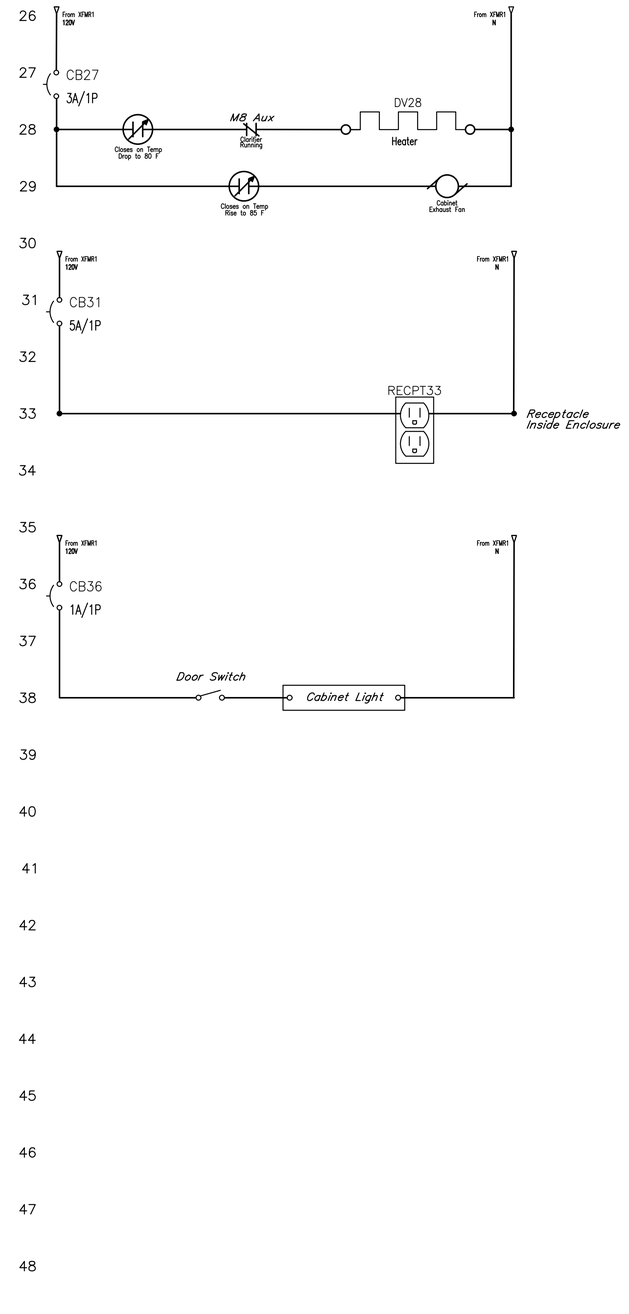

NO.	DATE	REVISIONS	APP.

WILBARGER CREEK M.U.D. No. 2
TRAVIS COUNTY, TEXAS

WASTEWATER TREATMENT PLANT
EXPANSION TO 1.5 MGD

CLARIFIER CONTROL SYSTEM

QUIDDITY
Texas Board of Professional Engineers and Land Surveyors Reg. No. F-23290
912 South Capital of Texas Hwy, Suite 300 • Austin, TX 78746 • 512.441.9493

SCALE: NONE	DGN. BY: JJJOHN
DATE: JUNE 2026	DWN. BY: CGULAR
JOB NO. 0A651-0021-02	DWG. NO.
SUBMITTED:	SURV. BY:
	F.B. NO.

STATE OF TEXAS
JOEL J. JOHN
116778
LICENSED PROFESSIONAL ENGINEER
07/01/2026

0-E-32
SHEET NO. 178 OF 230

ORIGINAL SCALE IN INCHES FOR REDUCED PLANS

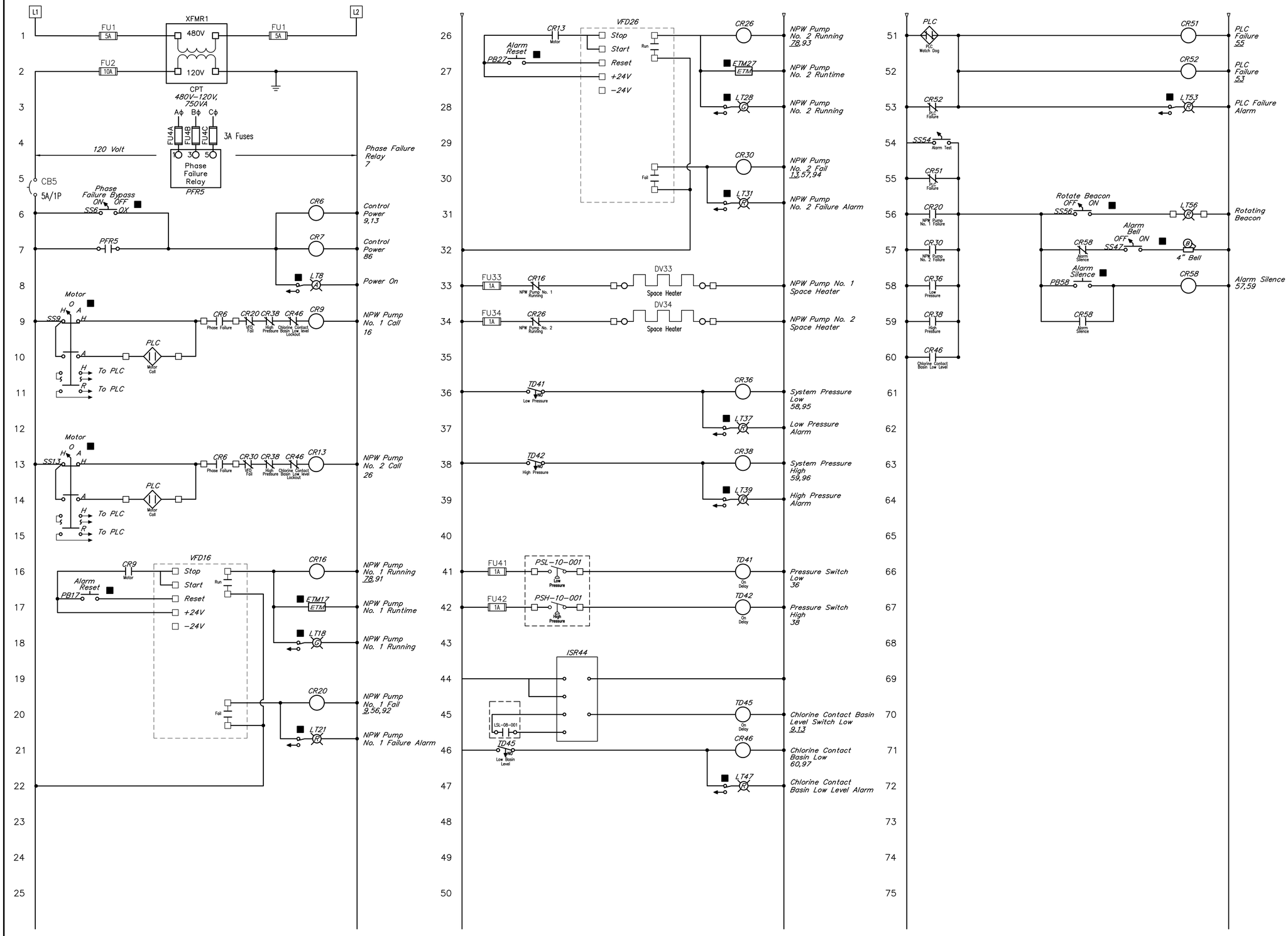

NO.	DATE	REVISIONS	APP.

WILBARGER CREEK M.U.D. No. 2
TRAVIS COUNTY, TEXAS

WASTEWATER TREATMENT PLANT
EXPANSION TO 1.5 MGD

NPW SYSTEM CONTROL – SHEET 1 OF 3

QUIDDITY
Texas Board of Professional Engineers and Land Surveyors Reg. No. F-23290
912 South Capital of Texas Hwy, Suite 300 • Austin, TX 78746 • 512.441.9493

SCALE:	NONE	DGN. BY:	JJJOHN
DATE:	JUNE 2026	DWN. BY:	CGULAR
JOB NO.	0A651–0021–02	DWG. NO.	
SUBMITTED:		SURV. BY:	
		F.B. NO.	

STATE OF TEXAS
JOEL L JOHN
116778
LICENSED PROFESSIONAL ENGINEER
07/01/2026

0–E–33
SHEET NO. 179 OF 230

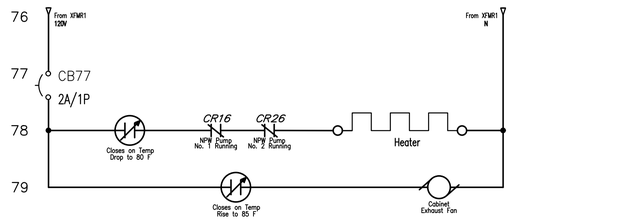

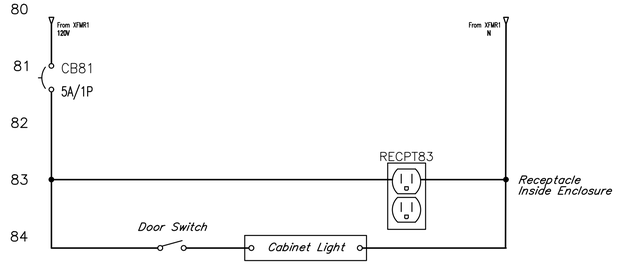

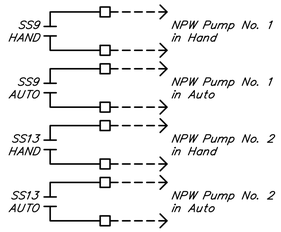

NOTE:
Please see specifications for a complete listing of IO points.

NO.	DATE	REVISIONS	APP.

WILBARGER CREEK M.U.D. No. 2
TRAVIS COUNTY, TEXAS

WASTEWATER TREATMENT PLANT
EXPANSION TO 1.5 MGD

NPW SYSTEM CONTROL – SHEET 2 OF 3

QUIDDITY
Texas Board of Professional Engineers and Land Surveyors Reg. No. F-23290
912 South Capital of Texas Hwy, Suite 300 • Austin, TX 78746 • 512.441.9493

SCALE: NONE	DGN. BY: JJJOHN
DATE: JUNE 2026	DWN. BY: CGULAR
JOB NO. 0A651-0021-02	DWG. NO.
SUBMITTED:	SURV. BY:
	F.B. NO.

STATE OF TEXAS
JOEL J. JOHN
116778
LICENSED PROFESSIONAL ENGINEER
07/01/2026

0-E-34
SHEET NO. 180 OF 230

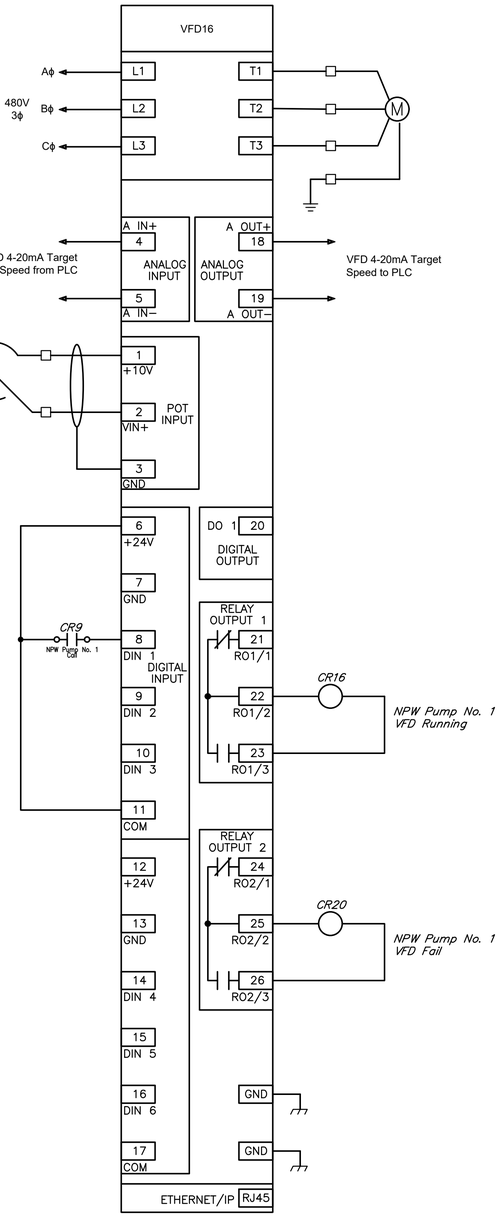

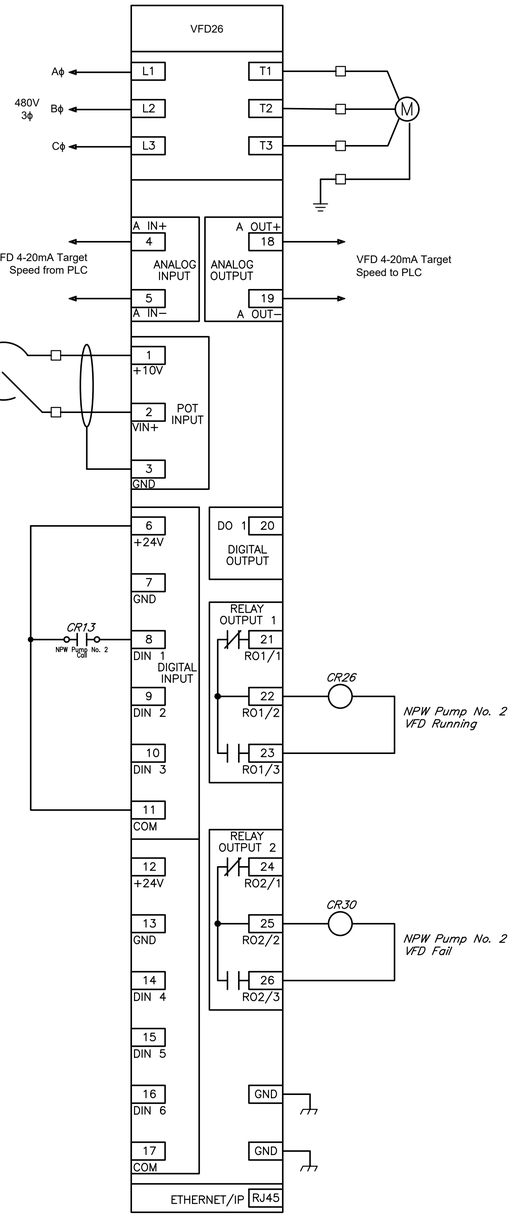

NOTE:

For VFDs shown with typical wiring diagram, please refer to manufacturers documentation for device specific wiring diagram.

NO.	DATE	REVISIONS	APP.

WILBARGER CREEK M.U.D. No. 2
TRAVIS COUNTY, TEXAS

WASTEWATER TREATMENT PLANT
EXPANSION TO 1.5 MGD

NPW SYSTEM CONTROL – SHEET 3 OF 3

QUIDDITY
Texas Board of Professional Engineers and Land Surveyors Reg. No. F-23290
912 South Capital of Texas Hwy, Suite 300 • Austin, TX 78746 • 512.441.9493

SCALE: NONE
DATE: JUNE 2026
JOB NO. 0A651-0021-02
SUBMITTED:
DGN. BY: JJJOHN
DWN. BY: CGULAR
DWG. NO.
SURV. BY:
F.B. NO.

STATE OF TEXAS
JOEL J. JOHN
116778
LICENSED PROFESSIONAL ENGINEER
07/01/2026

0-E-35
SHEET NO. 181 OF 230

ORIGINAL SCALE IN INCHES FOR REDUCED PLANS

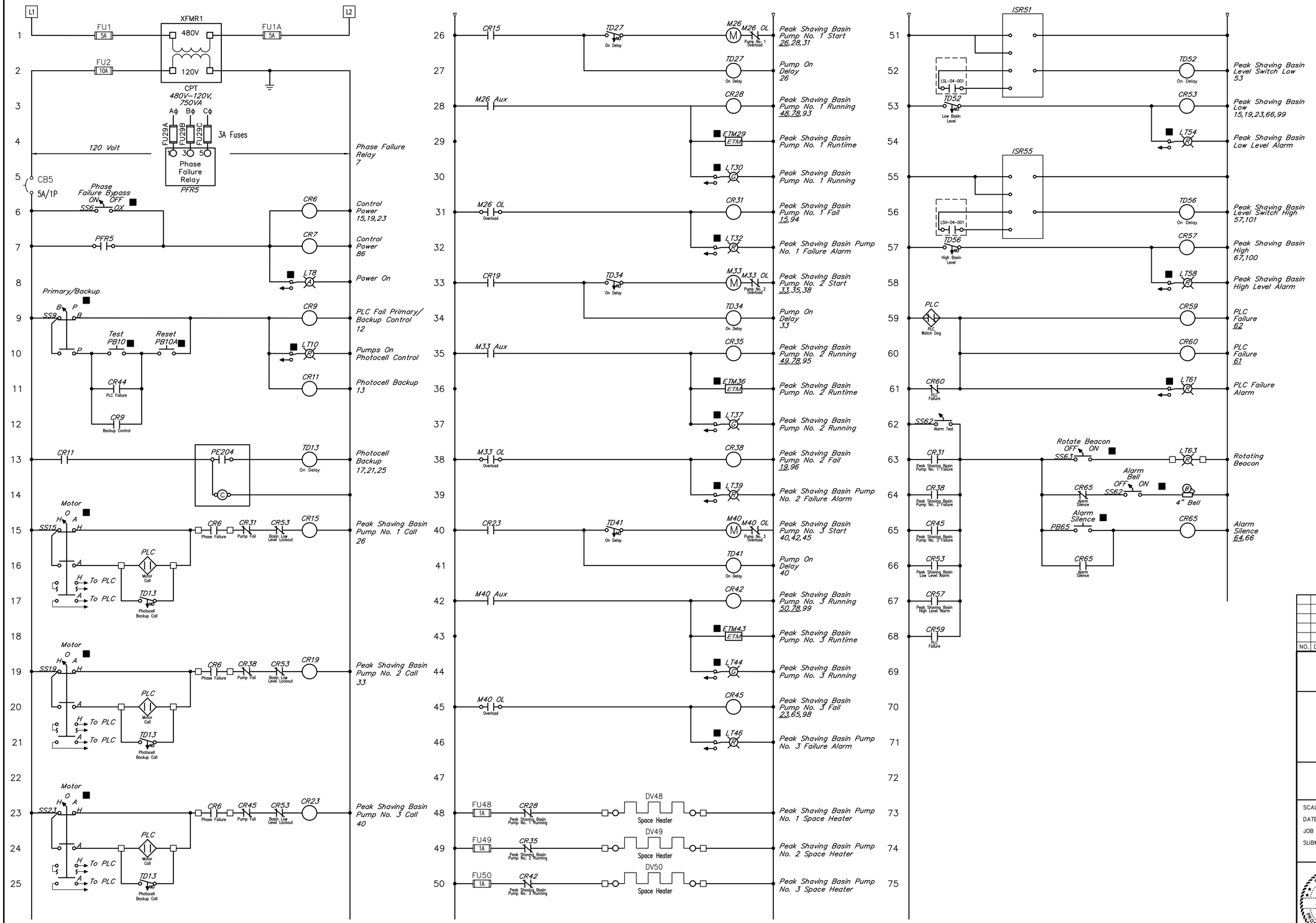

NO.	DATE	REVISIONS	APP.

WILBARGER CREEK M.U.D. No. 2
TRAVIS COUNTY, TEXAS

WASTEWATER TREATMENT PLANT
EXPANSION TO 1.5 MGD

PEAK SHAVING BASIN CONTROL – SHEET 1 OF 2

QUIDDITY
Texas Board of Professional Engineers and Land Surveyors Reg. No. F-23290
912 South Capital of Texas Hwy, Suite 300 • Austin, TX 78746 • 512.441.9493

SCALE:	NONE	DGN. BY:	JJJOHN
DATE:	JUNE 2026	DWN. BY:	CGULAR
JOB NO.	0A651-0021-02	DWG. NO.	
SUBMITTED:		SURV. BY:	
		F.B. NO.	

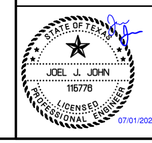

0-E-36
SHEET NO. 182 OF 230

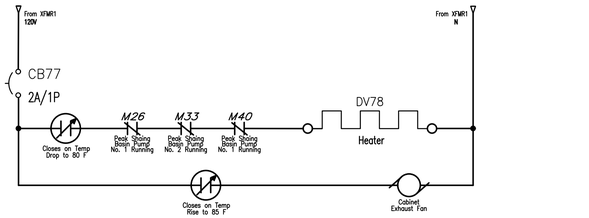

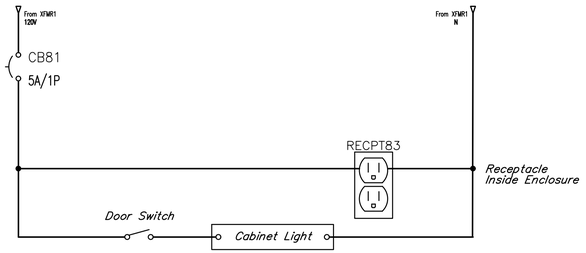

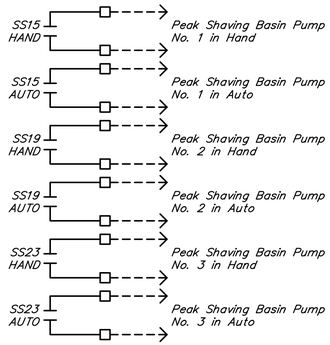

NOTE:

Please see specifications for a complete listing of IO points.

NO.	DATE	REVISIONS	APP.

WILBARGER CREEK M.U.D. No. 2
TRAVIS COUNTY, TEXAS

WASTEWATER TREATMENT PLANT
EXPANSION TO 1.5 MGD

PEAK SHAVING BASIN CONTROL – SHEET 2 OF 2

QUIDDITY
Texas Board of Professional Engineers and Land Surveyors Reg. No. F-23290
912 South Capital of Texas Hwy, Suite 300 • Austin, TX 78746 • 512.441.9493

SCALE:	NONE	DGN. BY:	JJJOHN
DATE:	JUNE 2026	DWN. BY:	CGULAR
JOB NO.	0A651-0021-02	DWG. NO.	
SUBMITTED:		SURV. BY:	
		F.B. NO.	

STATE OF TEXAS
JOEL L JOHN
116778
LICENSED PROFESSIONAL ENGINEER
07/01/2026

ORIGINAL SCALE IN INCHES FOR REDUCED PLANS

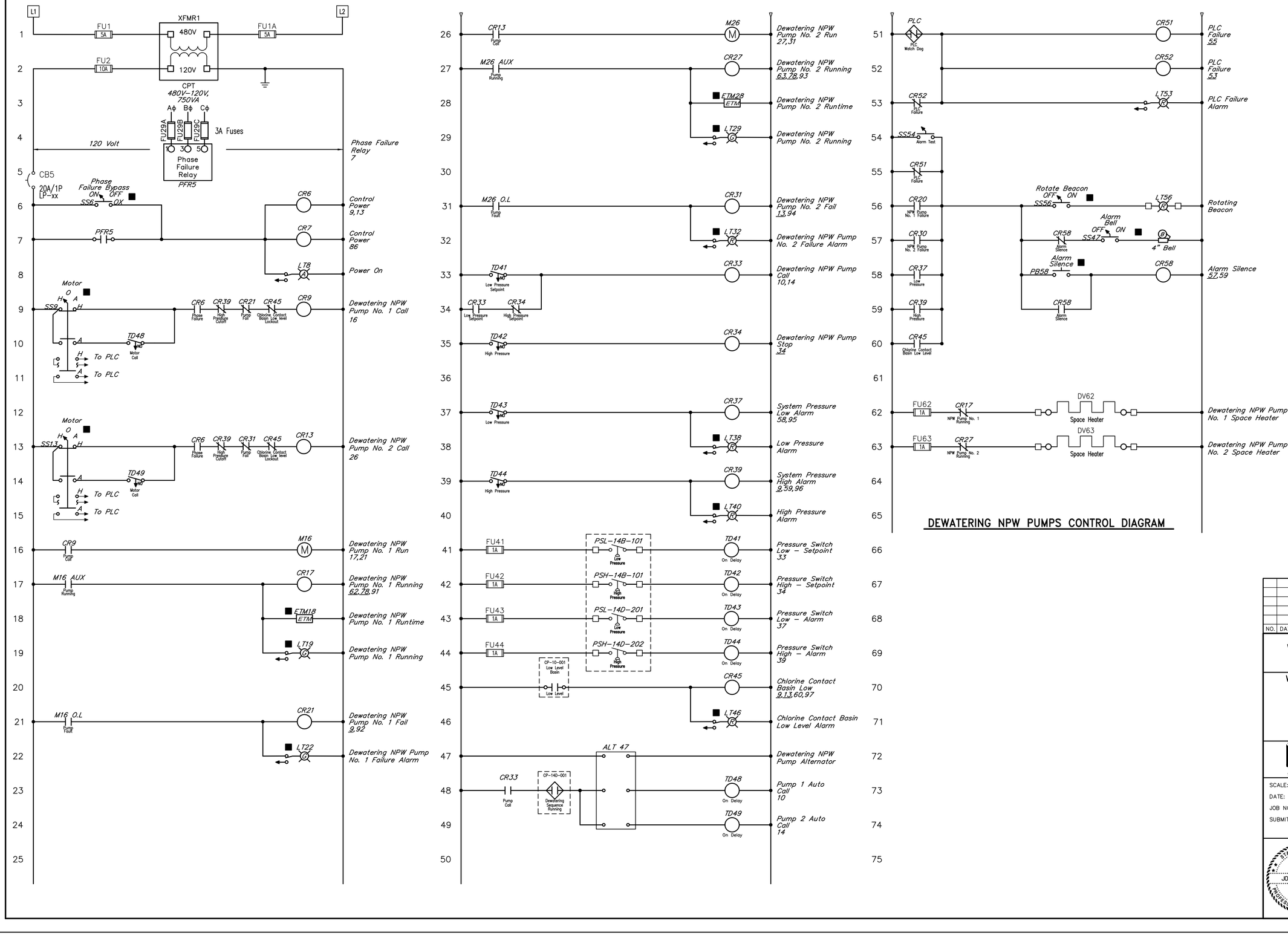

DEWATERING NPW PUMPS CONTROL DIAGRAM

NO.	DATE	REVISIONS	APP.

WILBARGER CREEK M.U.D. No. 2
TRAVIS COUNTY, TEXAS

WASTEWATER TREATMENT PLANT
EXPANSION TO 1.5 MGD

DEWATERING NPW SYSTEM CONTROL – SHEET 1 OF 2

QUIDDITY
Texas Board of Professional Engineers and Land Surveyors Reg. No. F-23290
912 South Capital of Texas Hwy, Suite 300 • Austin, TX 78746 • 512.441.9493

SCALE:	NONE	DGN. BY:	JJJOHN
DATE:	JUNE 2026	DWN. BY:	CGULAR
JOB NO.	0A651-0021-02	DWG. NO.	
SUBMITTED:		SURV. BY:	
		F.B. NO.	

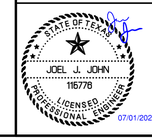

0-E-38
SHEET NO. 184 OF 230

0 1 2 3 4 5 ORIGINAL SCALE IN INCHES FOR REDUCED PLANS

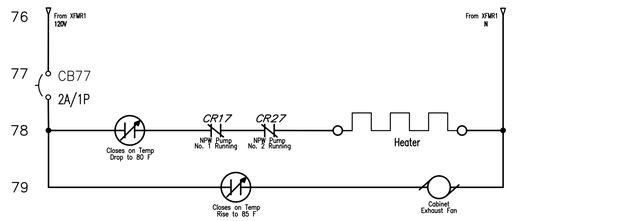

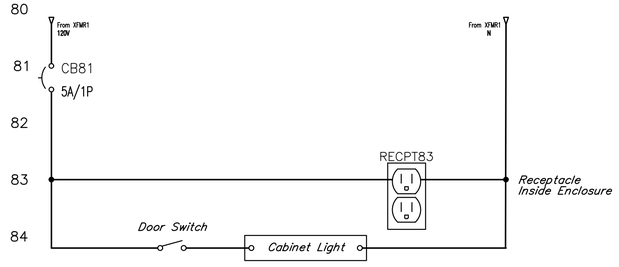

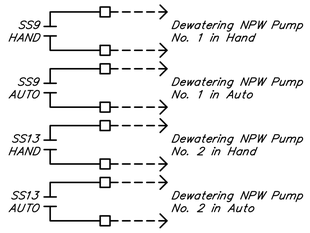

NOTE:
Please see specifications for a complete listing of IO points.

NO.	DATE	REVISIONS	APP.

WILBARGER CREEK M.U.D. No. 2
TRAVIS COUNTY, TEXAS

WASTEWATER TREATMENT PLANT
EXPANSION TO 1.5 MGD

DEWATERING NPW SYSTEM CONTROL – SHEET 2 OF 2

QUIDDITY
Texas Board of Professional Engineers and Land Surveyors Reg. No. F-23290
912 South Capital of Texas Hwy, Suite 300 • Austin, TX 78746 • 512.441.9493

SCALE:	NONE	DGN. BY:	JJJOHN
DATE:	JUNE 2026	DWN. BY:	CGULAR
JOB NO.	0A651-0021-02	DWG. NO.	
SUBMITTED:		SURV. BY:	
		F.B. NO.	

STATE OF TEXAS
JOEL J. JOHN
115776
LICENSED PROFESSIONAL ENGINEER
07/01/2026

0-E-39
SHEET NO. 185 OF 230

ORIGINAL SCALE IN INCHES FOR REDUCED PLANS

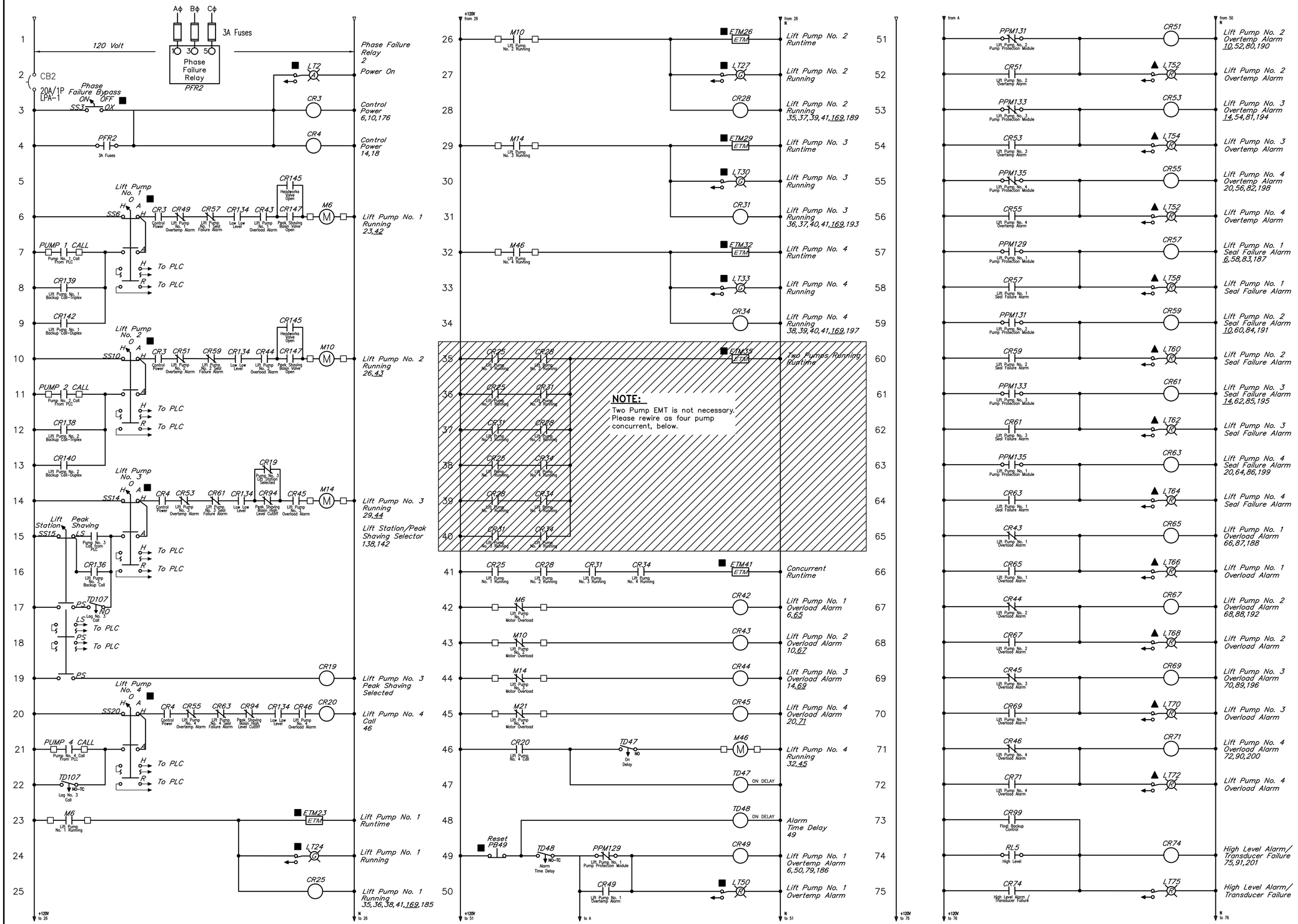

NO.	DATE	REVISIONS	APP.

WILBARGER CREEK M.U.D. No. 2
TRAVIS COUNTY, TEXAS

WASTEWATER TREATMENT PLANT
EXPANSION TO 1.5 MGD

LIFT STATION LOCAL CONTROL PANEL MODIFICATION – SHEET 1 OF 3

QUIDDITY
Texas Board of Professional Engineers and Land Surveyors Reg. No. F-23290
912 South Capital of Texas Hwy, Suite 300 • Austin, TX 78746 • 512.441.9493

SCALE: NONE	DGN. BY: JJJOHN
DATE: JUNE 2026	DWN. BY: CGULAR
JOB NO. 0A651-0021-02	DWG. NO.
SUBMITTED:	SURV. BY:
	F.B. NO.

STATE OF TEXAS
JOEL J. JOHN
115778
LICENSED PROFESSIONAL ENGINEER
07/01/2026

0-E-40
SHEET NO. 186 OF 230

ORIGINAL SCALE IN INCHES FOR REDUCED PLANS

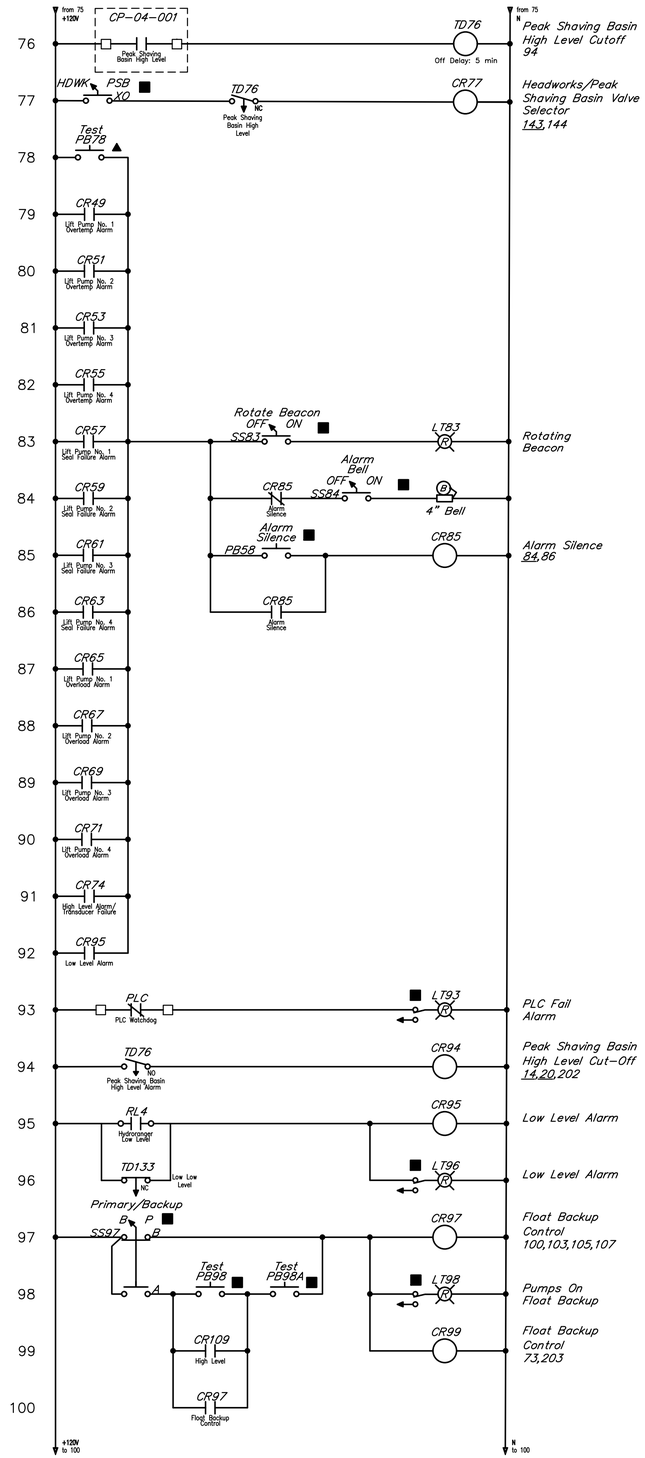

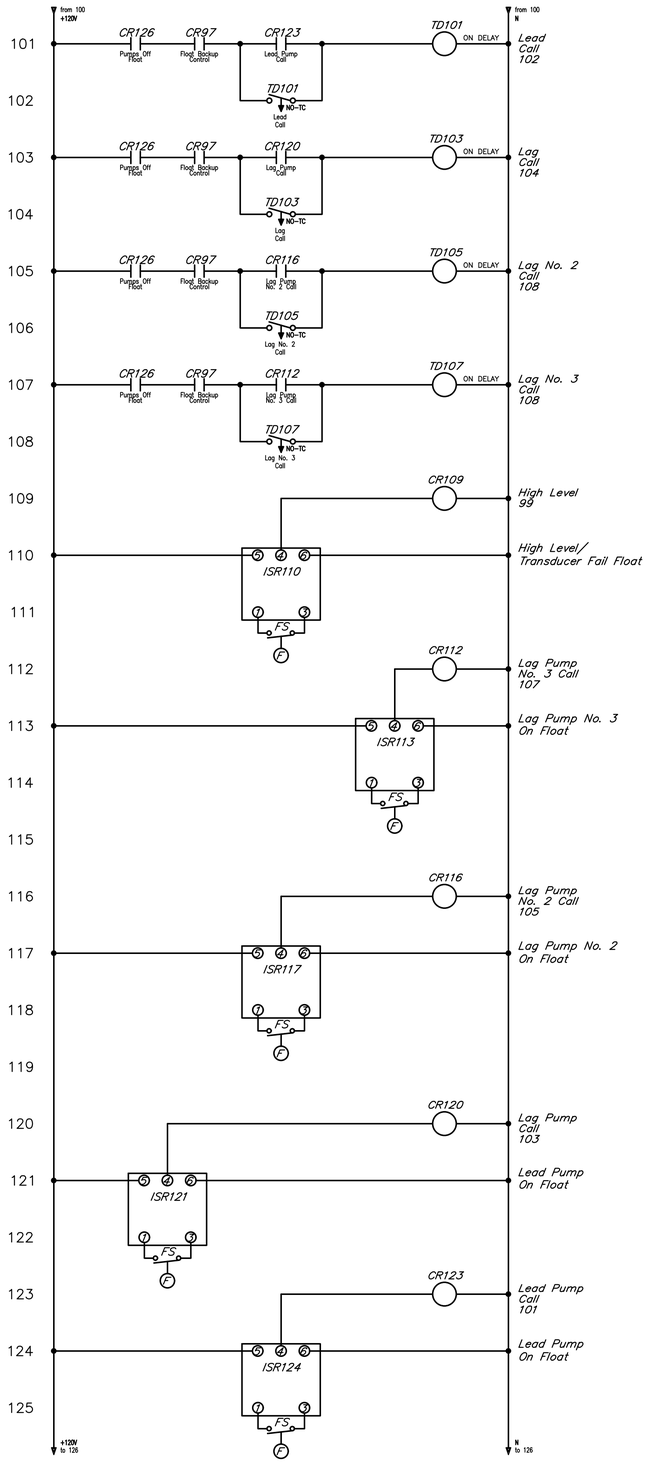

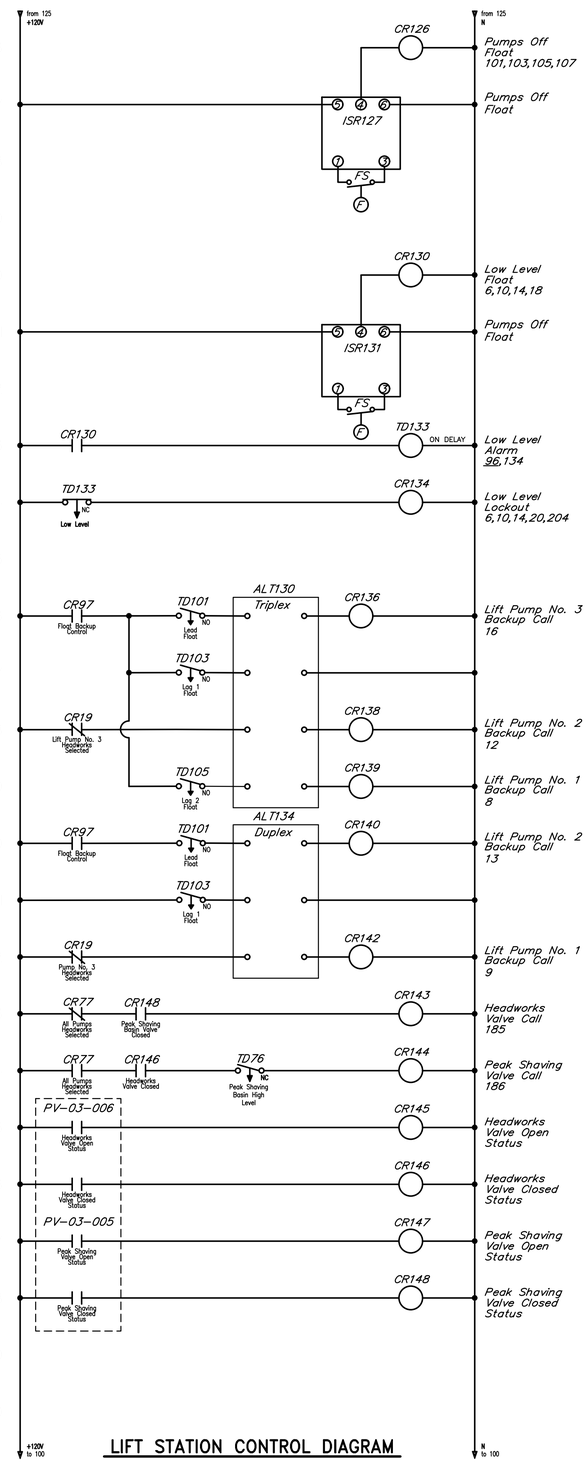

LIFT STATION CONTROL DIAGRAM

NO.	DATE	REVISIONS	APP.

WILBARGER CREEK M.U.D. No. 2
TRAVIS COUNTY, TEXAS

WASTEWATER TREATMENT PLANT EXPANSION TO 1.5 MGD

LIFT STATION LOCAL CONTROL PANEL MODIFICATION – SHEET 2 OF 3

QUIDDITY
Texas Board of Professional Engineers and Land Surveyors Reg. No. F-23290
912 South Capital of Texas Hwy, Suite 300 • Austin, TX 78746 • 512.441.9493

SCALE:	NONE	DGN. BY:	JJJOHN
DATE:	JUNE 2026	DWN. BY:	CGULAR
JOB NO.	0A651-0021-02	DWG. NO.	
SUBMITTED:		SURV. BY:	
		F.B. NO.	

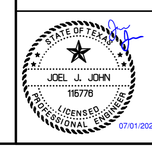

0-E-41

ORIGINAL SCALE IN INCHES FOR REDUCED PLANS

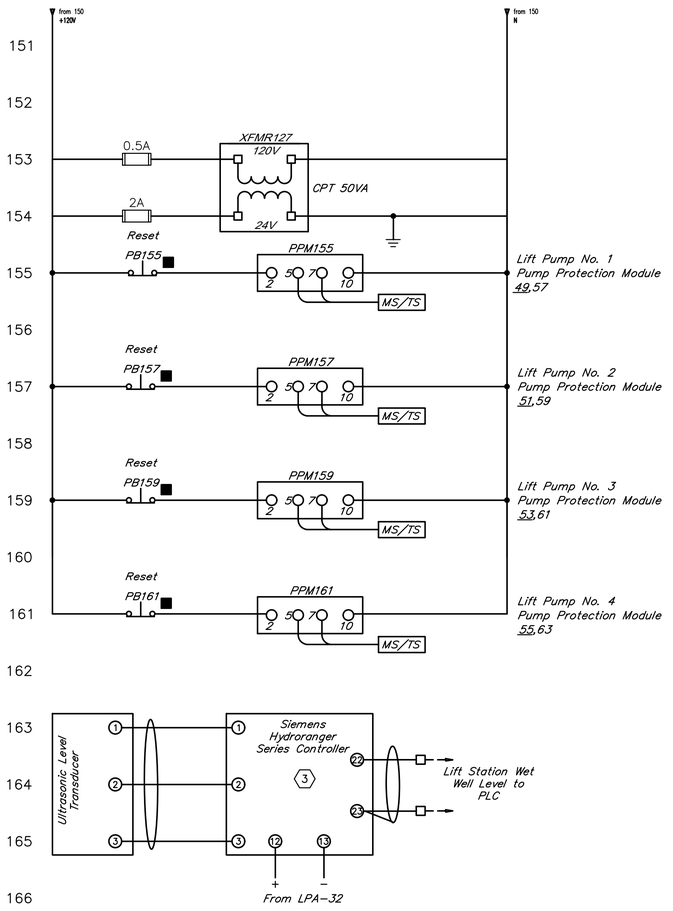

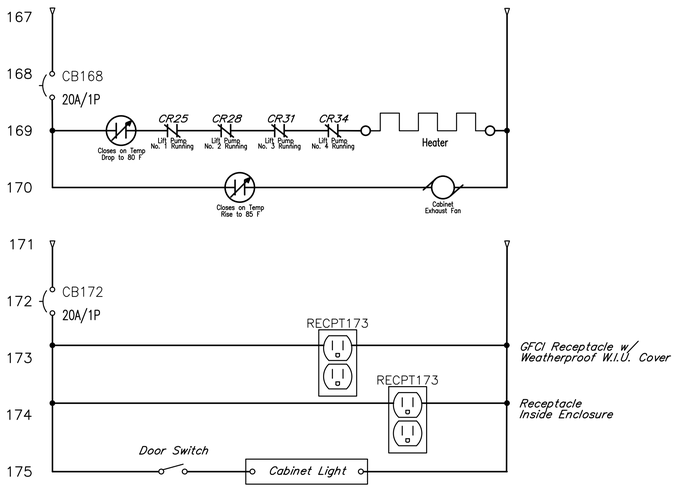

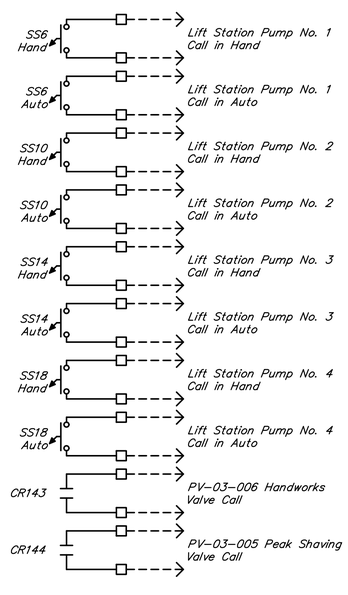

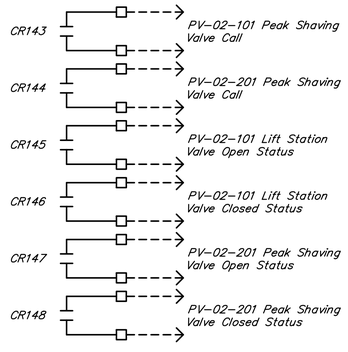

NOTE:

Please see specifications for a complete listing of IO points.

NO.	DATE	REVISIONS	APP.

WILBARGER CREEK M.U.D. No. 2
TRAVIS COUNTY, TEXAS

WASTEWATER TREATMENT PLANT
EXPANSION TO 1.5 MGD

LIFT STATION LOCAL CONTROL PANEL MODIFICATION – SHEET 3 OF 3

QUIDDITY
Texas Board of Professional Engineers and Land Surveyors Reg. No. F-23290
912 South Capital of Texas Hwy, Suite 300 • Austin, TX 78746 • 512.441.9493

SCALE: NONE
DATE: JUNE 2026
JOB NO. 0A651–0021–02
SUBMITTED:

DGN. BY: JJJOHN
DWN. BY: CGULAR
DWG. NO.
SURV. BY:
F.B. NO.

STATE OF TEXAS
JOEL J. JOHN
116776
LICENSED PROFESSIONAL ENGINEER
07/01/2026

0–E–42

ORIGINAL SCALE IN INCHES FOR REDUCED PLANS

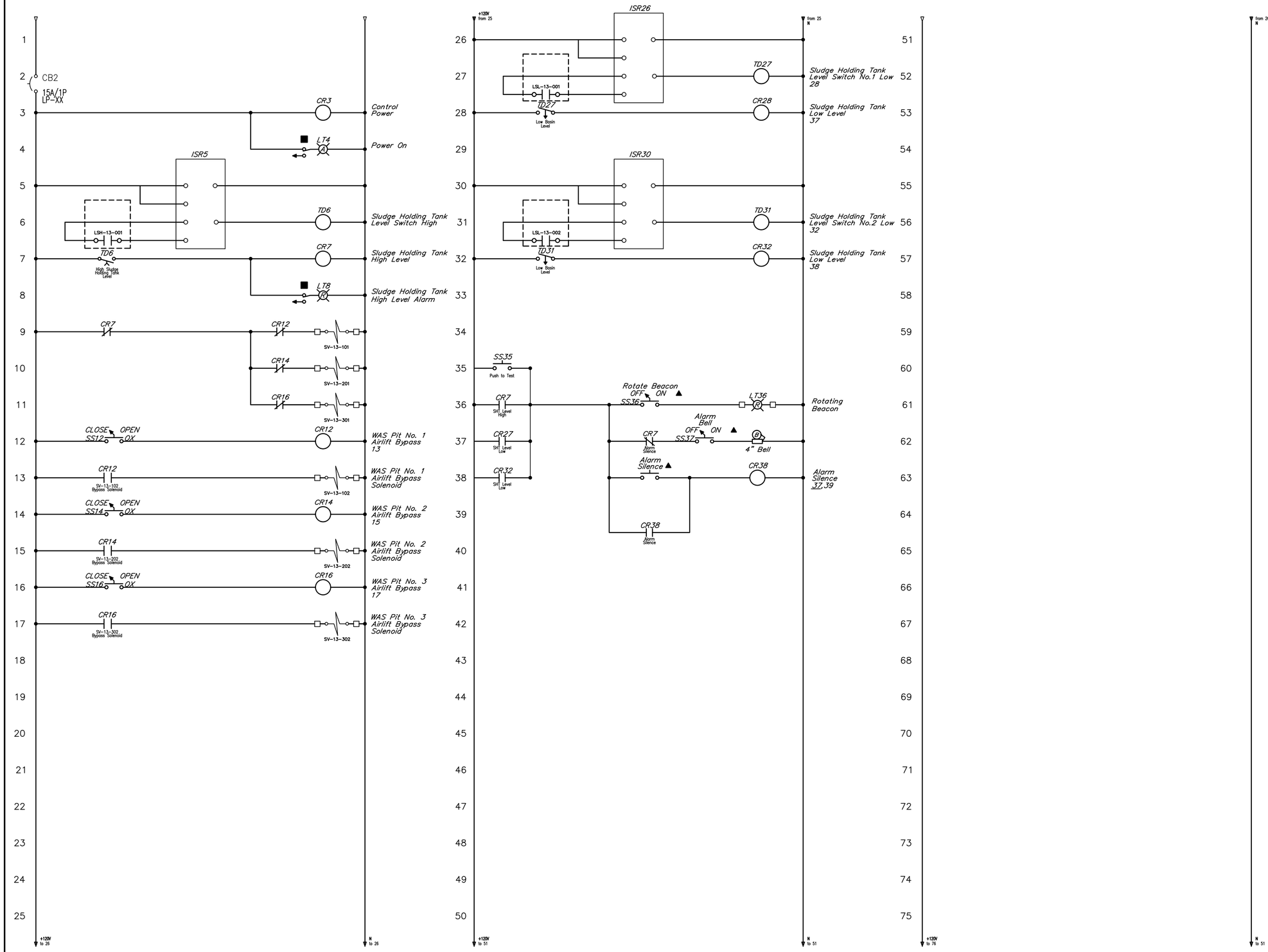

NO.	DATE	REVISIONS	APP.

WILBARGER CREEK M.U.D. No. 2
TRAVIS COUNTY, TEXAS

WASTEWATER TREATMENT PLANT
EXPANSION TO 1.5 MGD

SLUDGE HOLDING TANK CONTROL PANEL

QUIDDITY
Texas Board of Professional Engineers and Land Surveyors Reg. No. F-23290
912 South Capital of Texas Hwy, Suite 300 • Austin, TX 78746 • 512.441.9493

SCALE:	NONE	DGN. BY:	JJJOHN
DATE:	JUNE 2026	DWN. BY:	CGULAR
JOB NO.	0A651-0021-02	DWG. NO.	
SUBMITTED:		SURV. BY:	
		F.B. NO.	

STATE OF TEXAS
JOEL J. JOHN
115778
LICENSED PROFESSIONAL ENGINEER
07/01/2026

0-E-43
SHEET NO. 189 OF 230

0 1 2 3 4 5 ORIGINAL SCALE IN INCHES FOR REDUCED PLANS

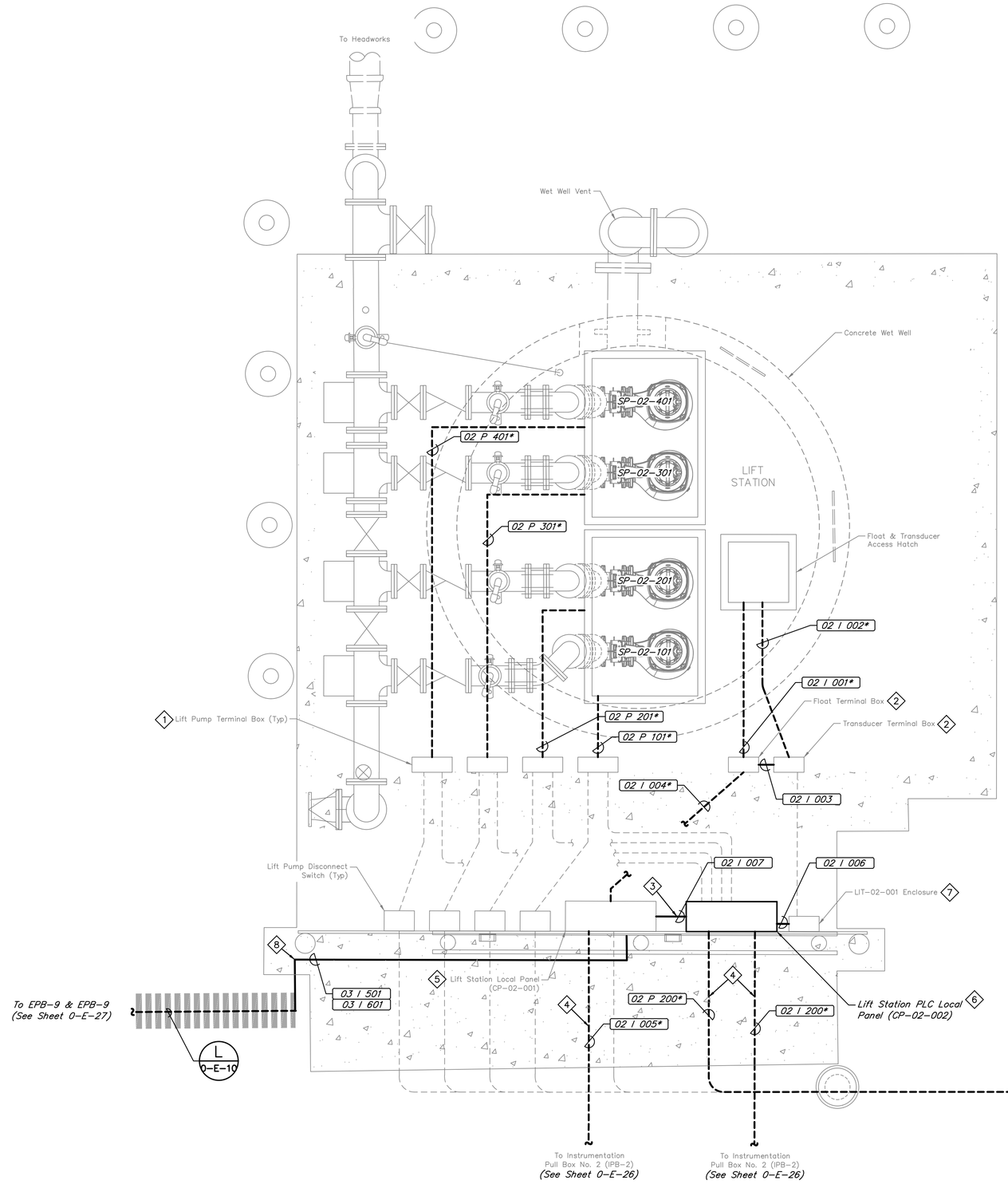

0 .5 1 2 4 6

SCALE: 1/2" = 1'

GENERAL NOTES:

1. Existing equipment and utility information is based on available existing plans and site observations. The Contractor shall field verify existing conditions prior to construction and advise the Owner of any discrepancies from the drawings.
2. Not all conduits and wireways are shown for clarity. Refer to schedules, one-line diagram, and control schematics for conduit, wire size and quantity requirements.

ITEMS OF WORK

NO.	DESCRIPTION
1	Connect all required lift pump power and control conductors to the existing terminal blocks. Provide new CSBE seal and install inside existing terminal box penetration.
2	Contractor shall pull 4 sets of float cables from the lift station wet well to the existing float terminal box and pull 3 sets of float cables along with the transducer vendor cable from the wet well to the existing transducer terminal box. Terminate all proposed conductors at the existing terminal blocks and route all the required signals to the existing Lift Station Control Panel (CP-02-001). Provide new CSBE seals, EYS Seals, duct seal and additional terminal blocks and hardware as required. See Detail Sheet 0-E-22.
3	Route proposed conduit and conductors from exist LIT-02-001 and exist Lift Station Local Panel (CP-02-001) to proposed Lift Station PLC Local Panel (CP-02-002) per conduit schedule (See Sheet 0-E-4).
4	Pull proposed conductors inside existing conduit per conduit schedule (See Sheet 0-E-4) and terminate as required.
5	Contractor shall replace existing Elapsed Time Meter (ETM) and Pump Protection Module (PPM) to comport with the proposed pumps. See Lift Station Control Diagrams on Sheets 0-E-40 through 0-E-42. Provide nameplate on face of Panel that reads "CONFIRM PROPER VALVE CONFIGURATION LINEUP PRIOR TO LIFT STATION PUMP OPERATION"
6	Lift Station PLC Local Control Panel (Max Size: 48"H x 36"W x 12"D) shall be replaced in place. The work shall be performed while lift station is on bypass and operating on float backup.
7	Contractor to shift LIT-02-001 Enclosure as needed to provide enough space for Lift Station PLC Local Control Panel. Provide conduit, conductors (for both power and control signal), mounting hardware, EYS seals and duct seal as required to accommodate new location.
8	Contractor to route above ground conduit parallel to exist electrical rack to avoid tripping hazard. Secure conduit every 6 ft using stainless steel unistrut and hardware and paint safety yellow for visibility.

NO.	DATE	REVISIONS	APP.

WILBARGER CREEK M.U.D. No. 2
TRAVIS COUNTY, TEXAS

WASTEWATER TREATMENT PLANT EXPANSION TO 1.5 MGD

LIFT STATION ELECTRICAL PLAN

QUIDDITY
Texas Board of Professional Engineers and Land Surveyors Reg. No. F-23290
912 South Capital of Texas Hwy, Suite 300 • Austin, TX 78746 • 512.441.9493

SCALE: 1/2"=1' DGN. BY: EFLORES
DATE: SEPTEMBER 2026 DWN. BY:
JOB NO. 0A651-0021-02 DWG. NO.
SUBMITTED: SURV. BY:
F.B. NO.

STATE OF TEXAS
BAO LE THIEN TRAN
149385
LICENSED PROFESSIONAL ENGINEER
09/22/2026

2-E-1
SHEET NO. 190 OF 230

C:\Users\tdobbins\DC\ACCDocs\Quiddity - Water-\0A651-0021-02 _ WILBARGER WWTP EXP. 1.5 MGD\Project Files\PLANS\ELEC-A2-A3.dwg, Mar 10, 2026 - 11:08am, tdobbins

0 1 2 3 4 5 ORIGINAL SCALE IN INCHES FOR REDUCED PLANS

GENERAL NOTES:

1. Existing equipment and utility information is based on available existing plans and site observations. The Contractor shall field verify existing conditions prior to construction and advise the Owner of any discrepancies from the drawings.
2. Not all conduits and wireways are shown for clarity. Refer to schedules, one-line diagram, and control schematics for conduit, wire size and quantity requirements.
3. Conduit routing is diagrammatically shown. Contractor to coordinate wit the equipment supplier to field route conduits accordingly.
4. Contractor shall provide additional conduits and wires from the control panel to all additional equipment as required by the approved screen manufacturer at no additional cost to the owner.
5. Contractor to provide and install explosion proof EYS seals for all conduits leaving and entering a hazardous area.

0 .5 1 2 4 6
SCALE: 1/2" = 1'

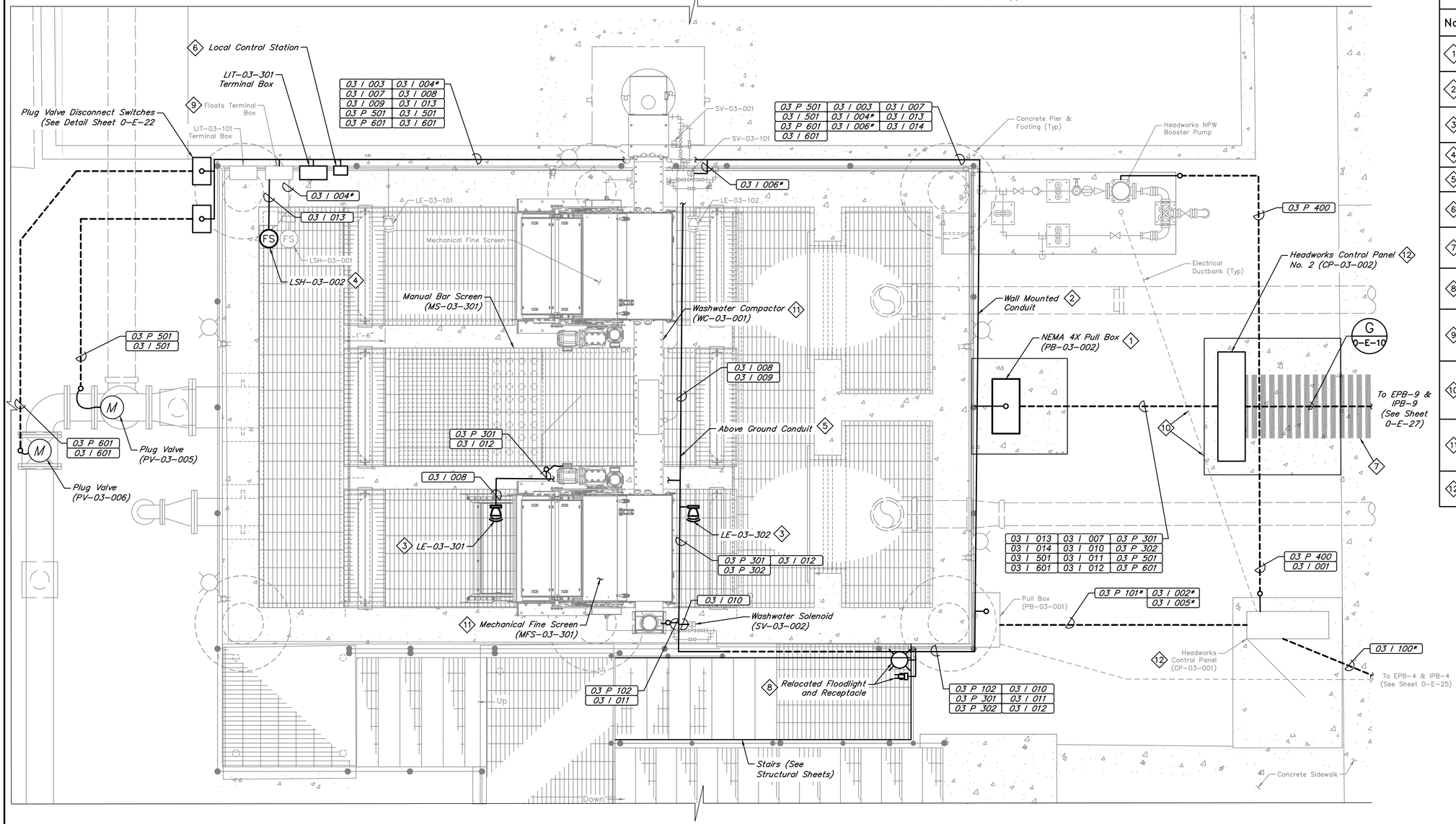

ITEMS OF WORK

No.	DESCRIPTION
1	NEMA 4X 316 S.S. Pull Box (PB-03-002): Sized Per NEC (Min: 24"x12"x16"). All mounting hardware shall be 316 stainless steel. See Detail Sheet 0-E-21.
2	Secure above ground conduit to outer wall of headworks basin every 6 ft using 316 stainless steel mounting hardware. See Detail Sheet 0-E-20.
3	Differential Level Ultrasonic Transducer: Install transducers in each channel with 316 stainless steel mounting hardware per manufacturer's recommendations.
4	Mount float with stainless steel J-hook and install stainless steel kellum grips. See Detail Sheet 0-E-19.
5	Conduit routed over grating shall be installed a minimum of 4" above finished grade. See detail Sheet 0-E-19.
6	Provide and install NEMA 8 Local Control Station. Extend existing mounting structure as needed to mount proposed equipment. See Detail Sheet 0-E-21.
7	Contractor to demolish and replace existing sidewalk sections as required to install proposed ductbank. Sidewalk shall be repaired to its original condition or better.
8	Contractor to relocate existing floodlight and receptacle in conflict with proposed stairs and platform. Provide additional conduit, conduit bodies, and mounting hardware as required.
9	Contractor to route LSH-03-002 signal to CP-03-002 via exist float terminal box. Demolish existing EYS seal and conduit sections as needed and provide terminal blocks, conduit, conductors, EYS seal, and duct seal as required. See Detail Sheet 0-E-21.
10	Contractor to abandon exist ductbank in place routed to Exist NPW Booster Pump. After proposed power feeder is connected to exist booster pump, remove and unused conductors, demolish conduits to 6" below grade and cap. Maintain a minimum of 6" clearance between proposed ductbank and existing.
11	Proposed equipment is supplied with emergency pull string. The contractor shall coordinate with the equipment supplier to field route the e-stop signal back to the proposed Secondary Headworks Control Panel (CP-03-002) per the conduit schedule.
12	Maximum allowable shutdown time frame to interconnect all control signals from proposed to existing panel is two hours.

NO.	DATE	REVISIONS	APP.

WILBARGER CREEK M.U.D. No. 2
TRAVIS COUNTY, TEXAS

WASTEWATER TREATMENT PLANT EXPANSION TO 1.5 MGD

ELEVATED HEADWORKS ELECTRICAL PLAN

QUIDDITY
Texas Board of Professional Engineers and Land Surveyors Reg. No. F-23290
912 South Capital of Texas Hwy, Suite 300 • Austin, TX 78746 • 512.441.9493

SCALE: 1/2"=1'-0" DGN. BY: EFLORES
DATE: SEPTEMBER 2026 DWN. BY: JSTRUHAR
JOB NO. 0A651-0021-02 DWG. NO.
SUBMITTED: SURV. BY:
F.B. NO.

STATE OF TEXAS
BAO LE THIEN TRAN
149385
LICENSED PROFESSIONAL ENGINEER
09/22/2026

3-E-1
SHEET NO. 191 OF 230

C:\Users\JAS\DC\ACCDocs\Quiddity\0A651-0021-02 _ WILBARGER WWTP EXP. 1.5 MGD\Project Files\PLANS\ELEC-A2-A3.dwg, Jul 01, 2026 - 12:44pm, tdobbins

0 1 2 3 4 5 ORIGINAL SCALE IN INCHES FOR REDUCED PLANS

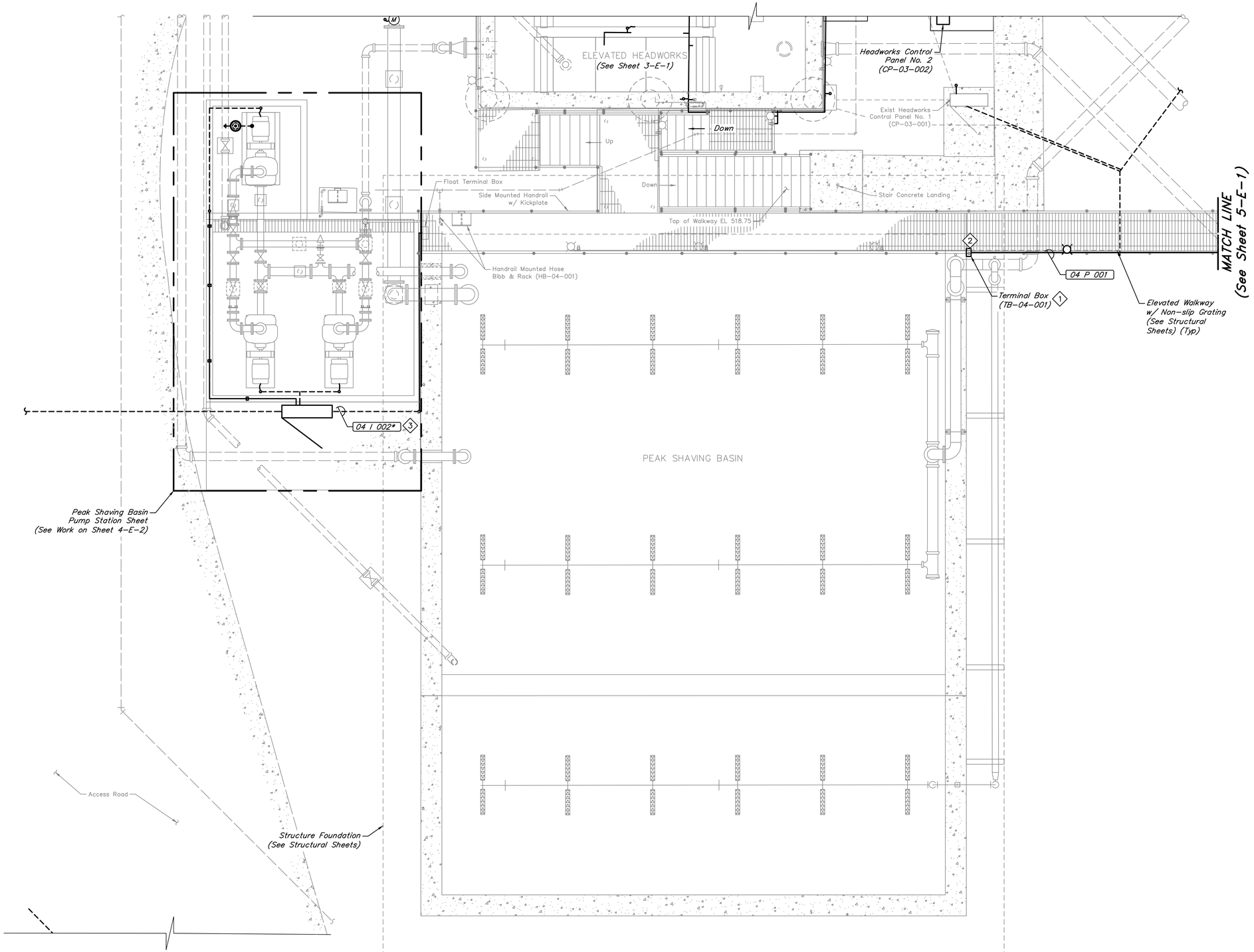

0 1 2 4 8 12
SCALE: 1/4" = 1'

ITEMS OF WORK

No.	DESCRIPTION
1	Install Terminal Box that is NEMA 4X, 10"W x 6"H x 6"D, and mounted on basin wall so that bottom of box is minimum 4' AFG. Provide backplate to mount terminal block.
2	Intercept existing lighting circuit and land wires at terminal blocks in terminal box in a manner that reinstate power to existing stanchion lights and extends power to proposed stanchion lights. Provide terminal blocks as required.
3	Replace 4 existing explosion proof seals below the terminal box and at the base of the basin for float cable conduits.

NO.	DATE	REVISIONS	APP.

WILBARGER CREEK M.U.D. No. 2
TRAVIS COUNTY, TEXAS

WASTEWATER TREATMENT PLANT
EXPANSION TO 1.5 MGD

PEAK SHAVING BASIN ELECTRICAL PLAN

QUIDDITY
Texas Board of Professional Engineers and Land Surveyors Reg. No. F-23290
912 South Capital of Texas Hwy, Suite 300 • Austin, TX 78746 • 512.441.9493

SCALE: 1/4" = 1'-0" DGN. BY: TRB
DATE: FEBRUARY 2026 DWN. BY: JSTRUHAR
JOB NO. 0A651-0021-02 DWG. NO.
SUBMITTED: SURV. BY:
F.B. NO.

STATE OF TEXAS
BAO LE THIEN TRAN
149385
LICENSED PROFESSIONAL ENGINEER
03/10/2026

4-E-1
SHEET NO. 192 OF 230

C:\Users\JAS\DC\ACCDocs\Quiddity\0A651-0021-02 _ WILBARGER WWTP EXP. 1.5 MGD\Project Files\PLANS\ELEC-A4.dwg, Feb 13, 2026 - 10:28am, JAS

0 1 2 3 4 5 ORIGINAL SCALE IN INCHES FOR REDUCED PLANS

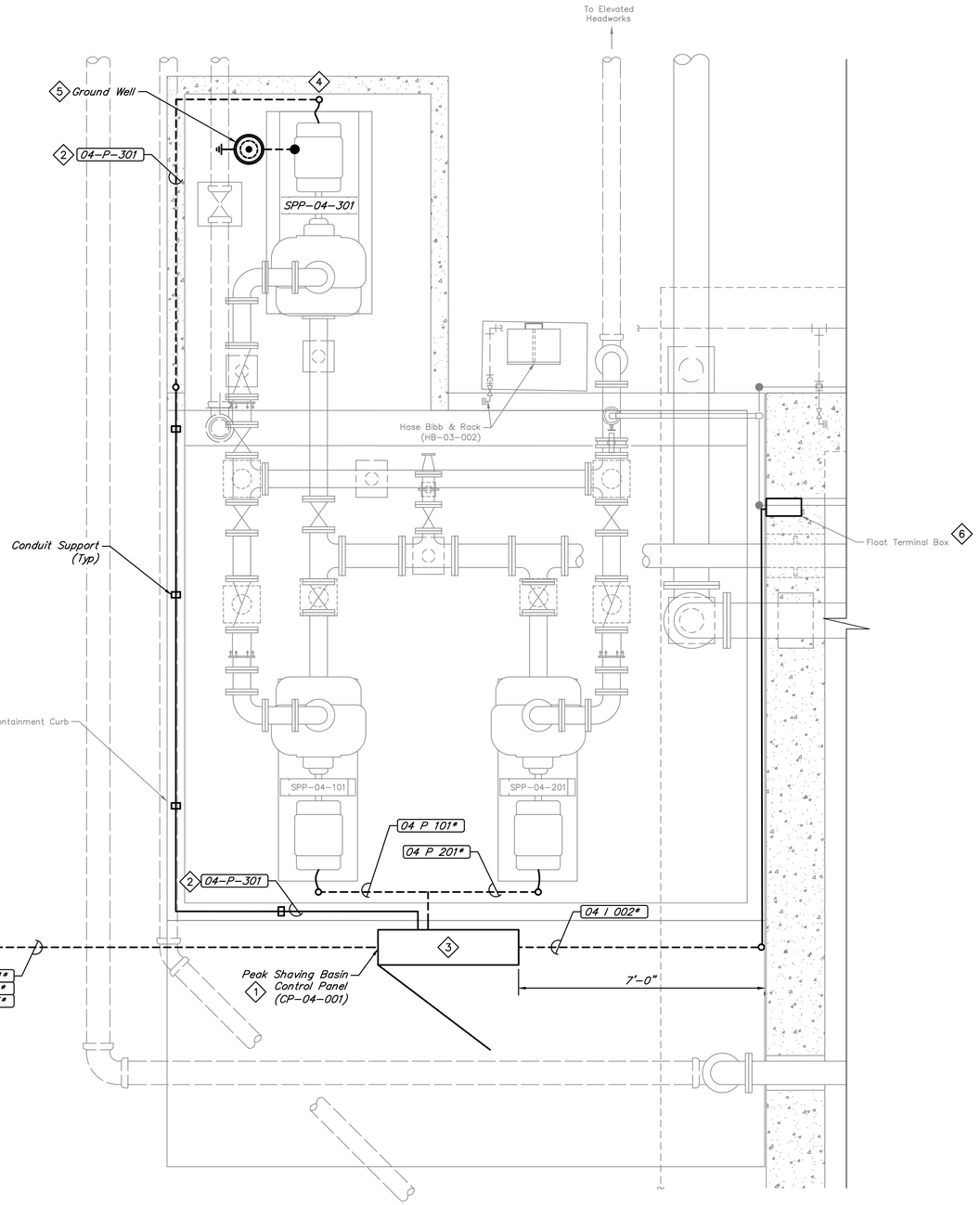

0 .5 1 2 4 6
SCALE: 1/2" = 1'

ITEMS OF WORK

No.	DESCRIPTION
1	Demolish and replace Peak Shaving Basin Control Panel (CP-04-001) in place. Use existing underground conduit between existing motor and panel to feed new conductors.
2	Install conduit for SPP-04-301 along existing concrete containment curb, placing conduit supports every 6'. Transition to underground conduit at the proposed containment area.
3	Proposed CP-04-001 shall have at least 24" between the bottom of the panel and finished floor. Add EYS seals for all coupling entering the panel.
4	Add EYS seals for all conduits running through a hazardous area.
5	Bond motor frame to ground rod with #8 Ground Wire.
6	Contractor shall relocate existing float terminal box and conduit as needed if in conflict with proposed walkway. Pull new conductors as required.

NO.	DATE	REVISIONS	APP.

WILBARGER CREEK M.U.D. No. 2
TRAVIS COUNTY, TEXAS

WASTEWATER TREATMENT PLANT
EXPANSION TO 1.5 MGD

PEAK SHAVING BASIN PUMP STATION ELECTRICAL PLAN

QUIDDITY
Texas Board of Professional Engineers and Land Surveyors Reg. No. F-23290
912 South Capital of Texas Hwy, Suite 300 • Austin, TX 78746 • 512.441.9493

SCALE: 1/2" = 1'-0" DGN. BY: TRB
DATE: JUNE 2026 DWN. BY: JSTRUHAR
JOB NO. 0A651-0021-02 DWG. NO.
SUBMITTED: SURV. BY:
F.B. NO.

STATE OF TEXAS
BAO LE THIEN TRAN
149385
LICENSED PROFESSIONAL ENGINEER
07/01/2026

4-E-2
SHEET NO. 193 OF 230

C:\Users\JAS\DC\ACCDocs\Quiddity\0A651-0021-02 _ WILBARGER WWTP EXP. 1.5 MGD\Project Files\PLANS\ELEC-A4.dwg, Jun 26, 2026 - 11:22am, JAS

0 1 2 3 4 5 ORIGINAL SCALE IN INCHES FOR REDUCED PLANS

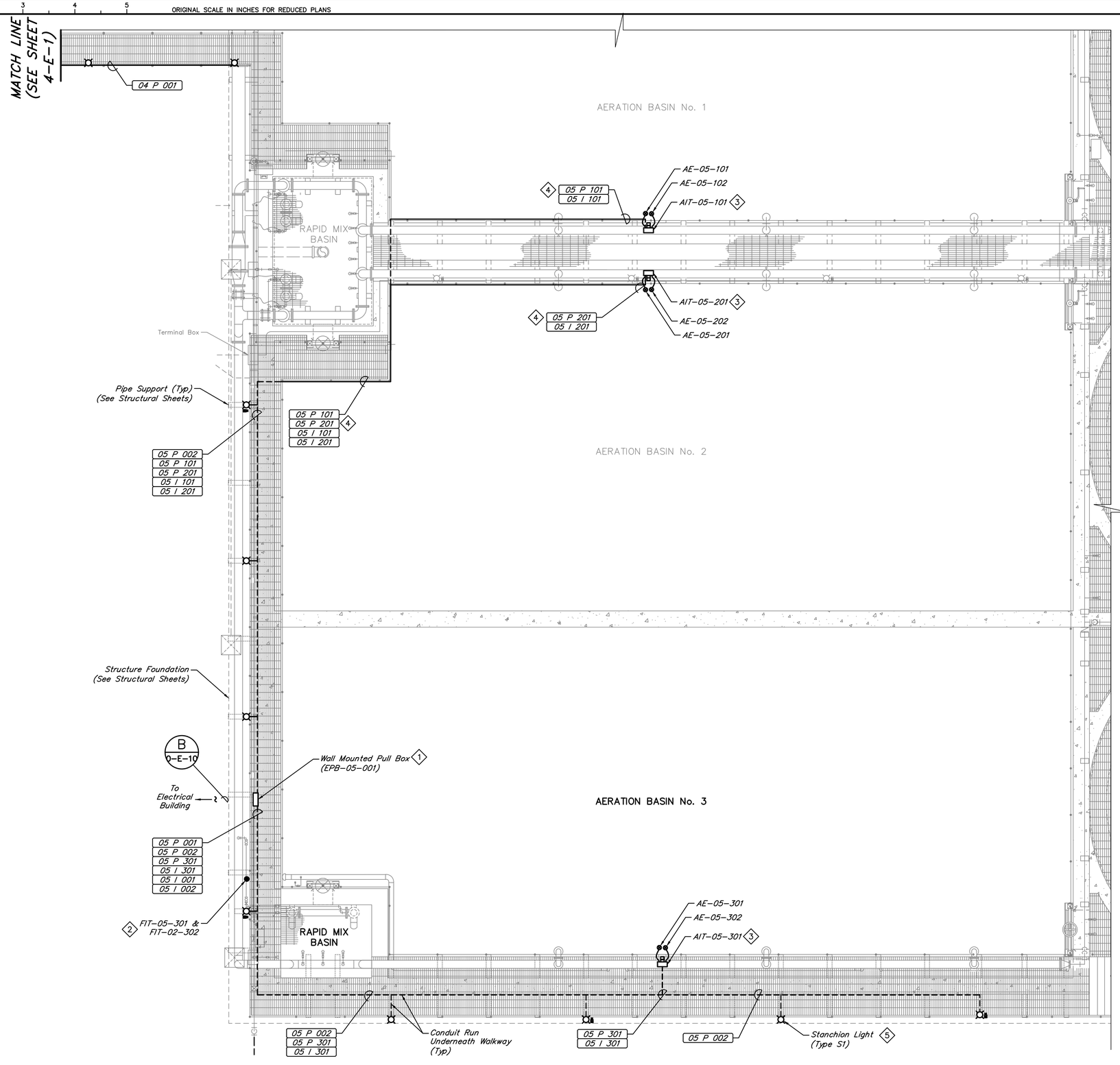



ITEMS OF WORK

No.	DESCRIPTION
1	Install Pull Box that is NEMA 4X 316 S.S., 20"H x 16"W x 6"D, and mounted to the wall on unistrut supports so that bottom of enclosure is 3' AFG. Conduit leaving the pull box to equipment on the basin shall be mounted on the walls under the grating.
2	See Mechanical sheets for exact location of flowmeters and installation detail.
3	Install a 3/16" thick with 1" rounded corners aluminum plate to support analyzer. install a 120VAC WP, toggle ON/OFF switch adjacent to analyzer to switch analyzer on/off. Install aluminum sunshield.
4	Mount conduit on hand rail as needed. See detail 9 on sheet 0-E-18.
5	See lighting fixture schedule on Sheet 0-E-2 for light fixture details and mounting detail on this sheets for all stanchion lights in Area 5

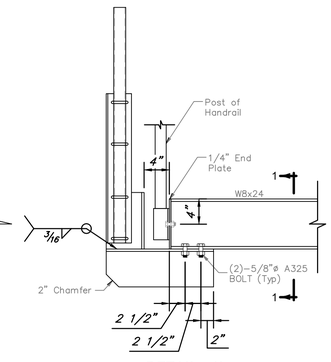

DETAIL 4b

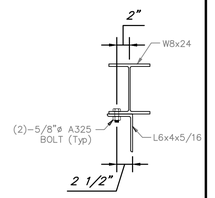

SECTION 1-1

STANCHION LIGHT FIXTURE MOUNTING DETAIL

NOT TO SCALE

NO.	DATE	REVISIONS	APP.

WILBARGER CREEK M.U.D. No. 2
TRAVIS COUNTY, TEXAS

WASTEWATER TREATMENT PLANT EXPANSION TO 1.5 MGD

AERATION BASIN No. 3 ELECTRICAL PLAN

QUIDDITY
Texas Board of Professional Engineers and Land Surveyors Reg. No. F-23290
912 South Capital of Texas Hwy, Suite 300 • Austin, TX 78746 • 512.441.9493

SCALE:	3/16" = 1'-0"	DGN. BY:	TRB
DATE:	JUNE 2026	DWN. BY:	JSTRUHAR
JOB NO.	0A651-0021-02	DWG. NO.	
SUBMITTED:		SURV. BY:	
		F.B. NO.	

STATE OF TEXAS
BAO LE THIEN TRAN
149385
LICENSED PROFESSIONAL ENGINEER
07/01/2026

5-E-1
SHEET NO. 194 OF 230

C:\Users\JAS\DC\ACCDocs\Quiddity\0A651-0021-02 _ WILBARGER WWTP EXP. 1.5 MGD\Project Files\PLANS\ELEC-A5.dwg, Jun 29, 2026 - 9:50am, JAS

0 1 2 3 4 5 ORIGINAL SCALE IN INCHES FOR REDUCED PLANS

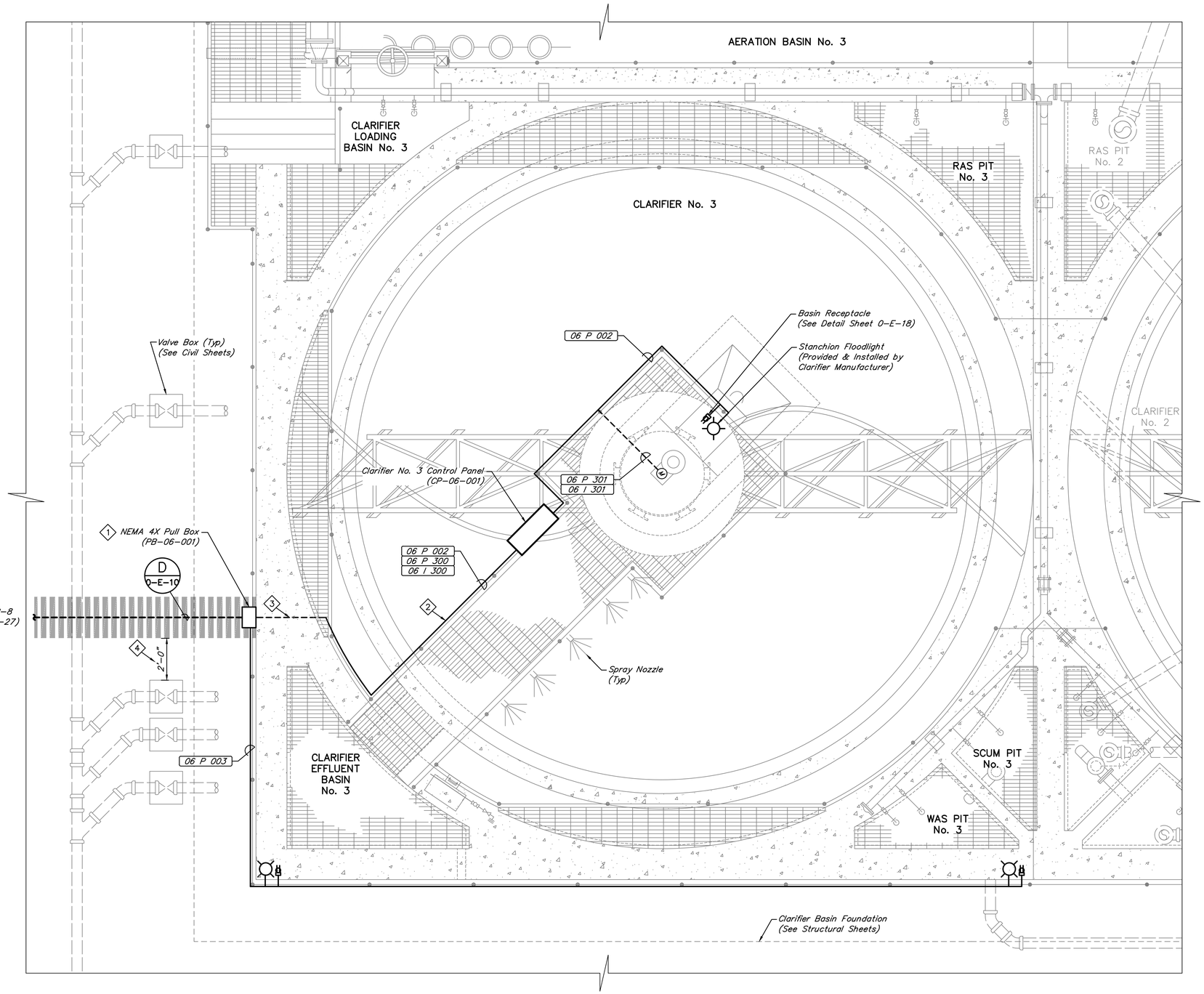



0 1 2 3 6
SCALE: 3/8" = 1'

GENERAL NOTES:

1. Existing equipment and utility information is based on available existing plans and site observations. The Contractor shall field verify existing conditions prior to construction and advise the Owner of any discrepancies from the drawings.

2. Not all conduits and wireways are shown for clarity. Refer to schedules, one-line diagram, and control schematics for conduit, wire size and quantity requirements.

ITEMS OF WORK	
No.	DESCRIPTION
1	NEMA 4X Pull Box (PB-06-001): Sized Per NEC (Min: 12"x8"x12"). Mount Pull box 3'-0" feet above finished floor using 316 stainless steel unistrut and hardware.
2	Secure above ground conduit to handrail along clarifier every 6 ft using 316 stainless steel mounting hardware. See Detail Sheet 0-E-18
3	See Structural Sheets for Conduit Embedded in Concrete detail.
4	Contractor to maintain a minimum distance of 2'-0" between edge of proposed ductbank and valve box.

NO.	DATE	REVISIONS	APP.

WILBARGER CREEK M.U.D. No. 2
TRAVIS COUNTY, TEXAS

WASTEWATER TREATMENT PLANT
EXPANSION TO 1.5 MGD

CLARIFIER No. 3 ELECTRICAL PLAN

QUIDDITY
Texas Board of Professional Engineers and Land Surveyors Reg. No. F-23290
912 South Capital of Texas Hwy, Suite 300 • Austin, TX 78746 • 512.441.9493

SCALE: 3/8" = 1'-0" DGN. BY: EFLORES
DATE: SEPTEMBER 2026 DWN. BY: JSTRUHAR
JOB NO. 0A651-0021-02 DWG. NO.
SUBMITTED: SURV. BY:
F.B. NO.

STATE OF TEXAS
BAO LE THIEN TRAN
149385
LICENSED PROFESSIONAL ENGINEER
09/22/2026

6-E-1
SHEET NO. 195 OF 230

C:\Users\tdobbins\DC\ACCDocs\Quiddity - Water-\0A651-0021-02 _ WILBARGER WWTP EXP. 1.5 MGD\Project Files\PLANS\ELEC-A6.dwg, Mar 10, 2026 - 11:11am, tdobbins

0 1 2 3 4 5 ORIGINAL SCALE IN INCHES FOR REDUCED PLANS

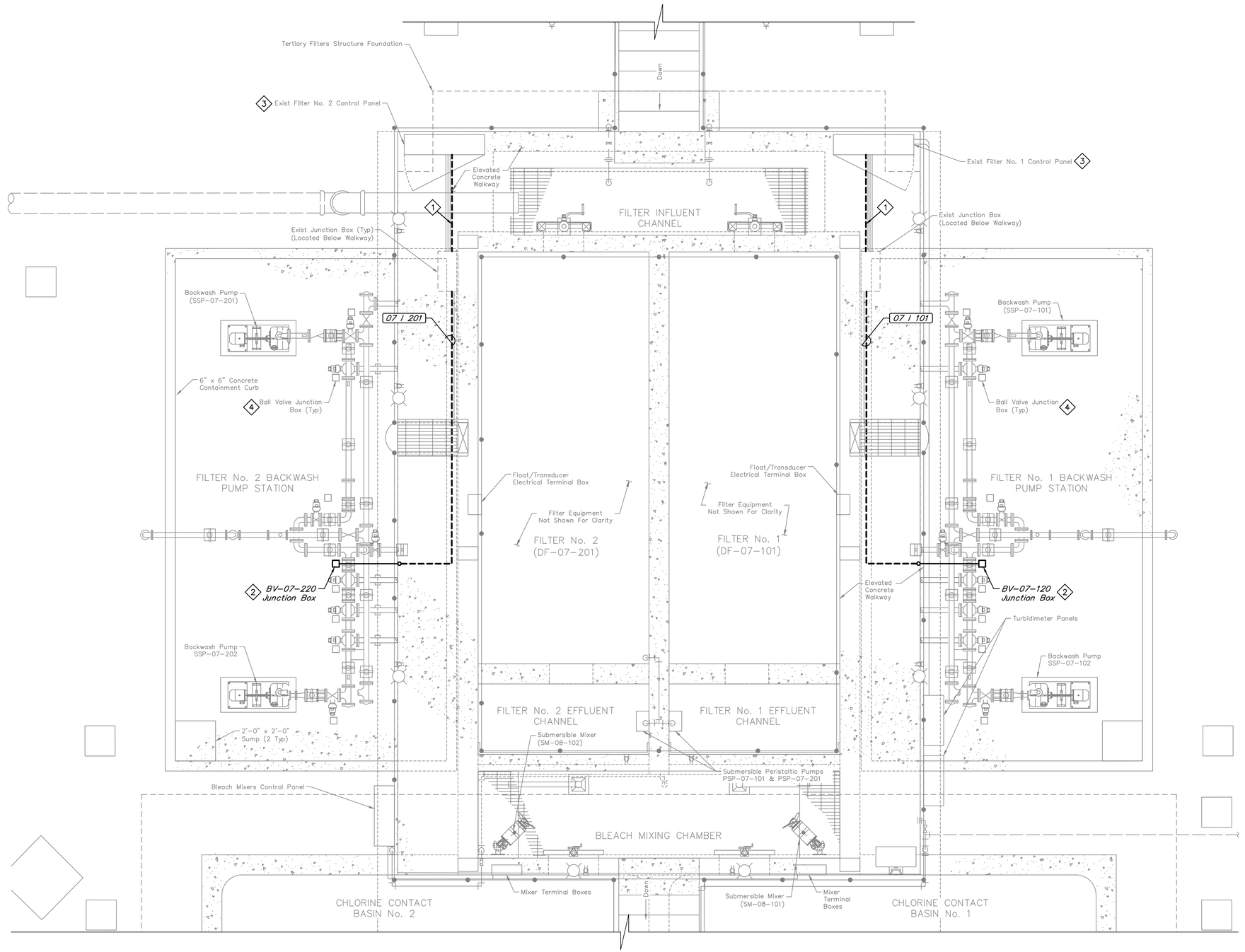

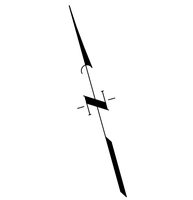

GENERAL NOTES:

1. Existing equipment and utility information is based on available existing plans and site observations. The Contractor shall field verify existing conditions prior to construction and advise the Owner of any discrepancies from the drawings.
2. Not all conduits and wireways are shown for clarity. Refer to schedules, one-line diagram, and control schematics for conduit, wire size and quantity requirements.

ITEMS OF WORK	
No.	DESCRIPTION
1	Contractor to route conduit underneath filter walkway and penetrate to back of filter control panel. Secure conduit using stainless steel hardware every 6 feet.
2	NEMA 4X Junction Box: Contractor shall provide a stainless steel junction box (6"x6"x4" min) for wiring of the actuator cordset. Conduit and wire from junction box to actuator are by others. Provide stainless steel strut support base and hardware for proposed Junction Box.
3	Contractor shall shutdown one panel at a time to interconnect all the proposed power and control signals.
4	Provide stainless steel strut support base and hardware for all existing Ball Valve Junction Boxes.

NO.	DATE	REVISIONS	APP.

WILBARGER CREEK M.U.D. No. 2
TRAVIS COUNTY, TEXAS

WASTEWATER TREATMENT PLANT
EXPANSION TO 1.5 MGD

TERTIARY FILTERS & BACKWASH ELECTRICAL PLAN

QUIDDITY
Texas Board of Professional Engineers and Land Surveyors Reg. No. F-23290
912 South Capital of Texas Hwy, Suite 300 • Austin, TX 78746 • 512.441.9493

SCALE: 3/8" = 1'-0" DGN. BY: EFLORES
DATE: FEBRUARY 2026 DWN. BY: JSTRUHAR
JOB NO. 0A651-0021-02 DWG. NO.
SUBMITTED: SURV. BY:
F.B. NO.

STATE OF TEXAS
BAO LE THIEN TRAN
149385
LICENSED PROFESSIONAL ENGINEER
03/10/2026

7-E-1
SHEET NO. 196 OF 230

C:\Users\JAS\DC\ACCDocs\Quiddity\0A651-0021-02 _ WILBARGER WWTP EXP. 1.5 MGD\Project Files\PLANS\ELEC-A7.dwg, Feb 18, 2026 - 7:09pm, ssomers

0 1 2 3 4 5 ORIGINAL SCALE IN INCHES FOR REDUCED PLANS

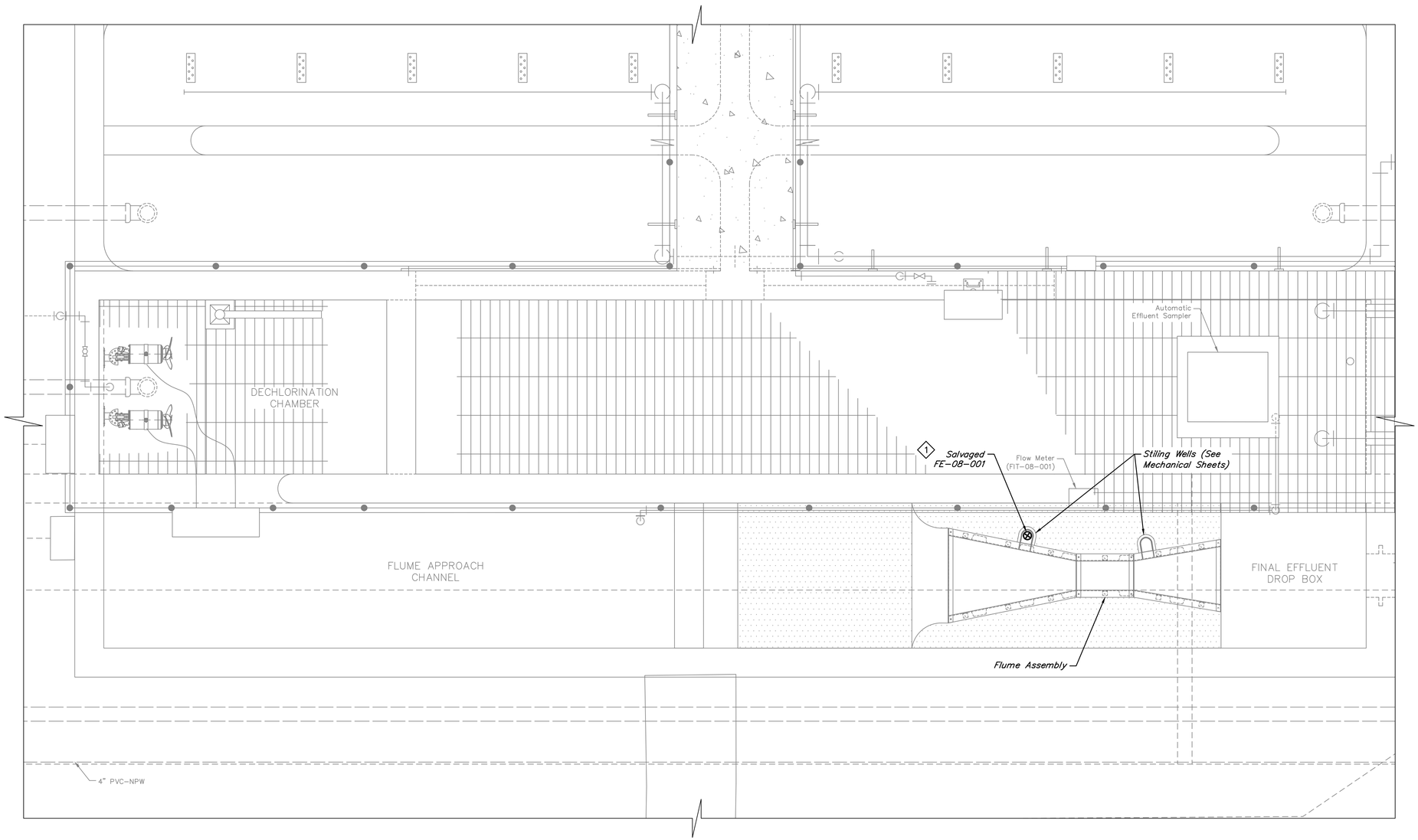

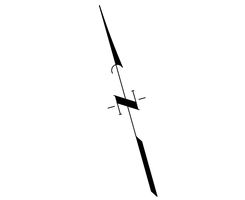

ITEMS OF WORK

No.	DESCRIPTION
1	Existing level instrument to be salvaged and reused following flume replacement. Contractor to place instruments using existing mount and manufacture cable in proposed stilling wells and restore to functionality once new flume and stilling wells are installed. Field configure the FE and FIT with the new flume assembly per manufacture's recommendation.

NO.	DATE	REVISIONS	APP.

WILBARGER CREEK M.U.D. No. 2
TRAVIS COUNTY, TEXAS

WASTEWATER TREATMENT PLANT
EXPANSION TO 1.5 MGD

CHLORINE CONTACT BASIN ELECTRICAL PLAN

QUIDDITY
Texas Board of Professional Engineers and Land Surveyors Reg. No. F-23290
912 South Capital of Texas Hwy, Suite 300 • Austin, TX 78746 • 512.441.9493

SCALE: 1/2" = 1'-0" DGN. BY: TRB
DATE: JUNE 2026 DWN. BY: JSTRUHAR
JOB NO. 0A651-0021-02 DWG. NO.
SUBMITTED: SURV. BY:
F.B. NO.

STATE OF TEXAS
BAO LE THIEN TRAN
149385
LICENSED PROFESSIONAL ENGINEER
07/01/2026

8-E-1
SHEET NO. 197 OF 230

C:\Users\JAS\DC\ACCDocs\Quiddity\0A651-0021-02 _ WILBARGER WWTP EXP. 1.5 MGD\Project Files\PLANS\ELEC-A8.dwg, Jun 29, 2026 – 3:35pm, JAS

0 1 2 3 4 5 ORIGINAL SCALE IN INCHES FOR REDUCED PLANS

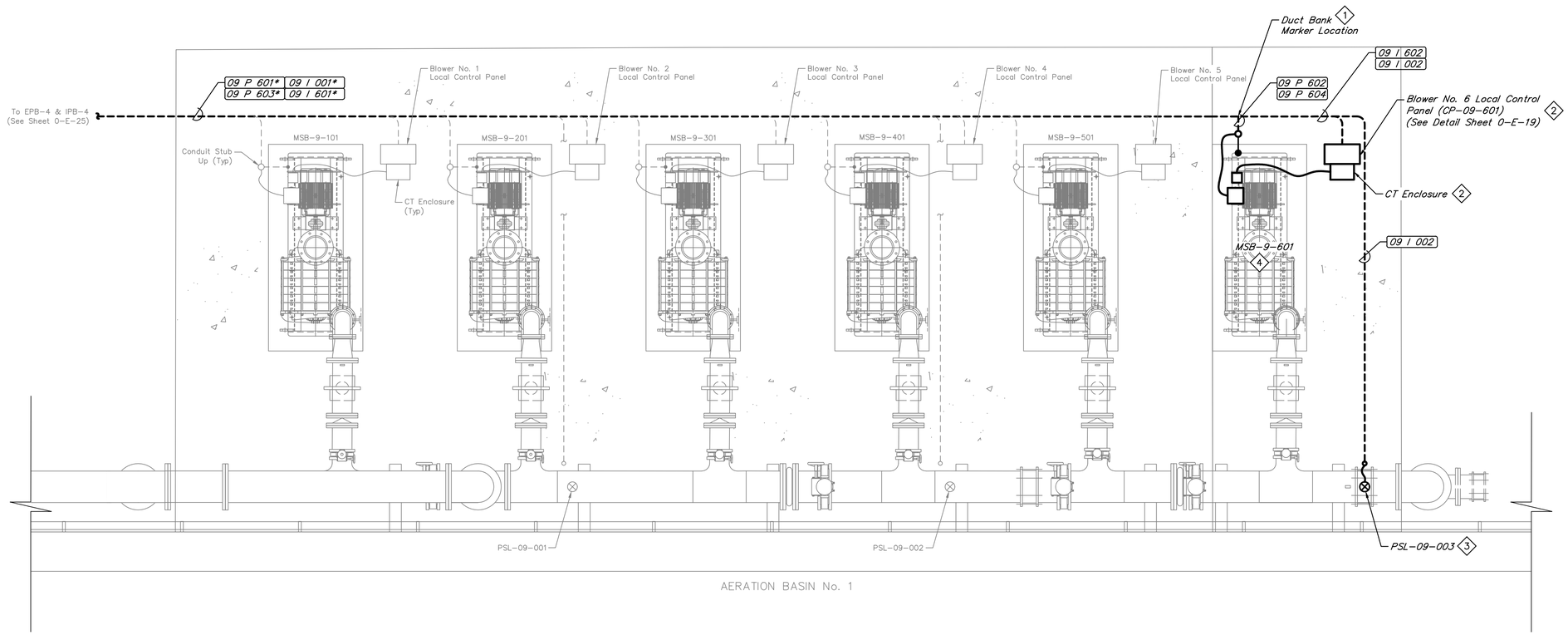

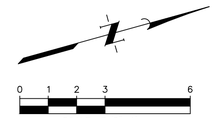

GENERAL NOTES:

1. Existing equipment and utility information is based on available existing plans and site observations. The Contractor shall field verify existing conditions prior to construction and advise the Owner of any discrepancies from the drawings.
2. Not all conduits and wireways are shown for clarity. Refer to schedules, one-line diagram, and control schematics for conduit, wire size and quantity requirements.

ITEMS OF WORK	
No.	DESCRIPTION
1	Contractor to extend existing conduit from exist duct bank marker as to proposed equipment as needed. See Area 9 Conduit Schedule on Sheet 0-E-6.
2	Contractor shall match existing equipment and installation method. See Structural Sheets for Device Mounting Post Detail.
3	Provide stainless steel hardware and unistrut for all above ground conduit.
4	Extend #4/0 bare copper wire from duct bank in 1" conduit sleeve and bond to motor frame.

NO.	DATE	REVISIONS	APP.

WILBARGER CREEK M.U.D. No. 2
TRAVIS COUNTY, TEXAS

WASTEWATER TREATMENT PLANT
EXPANSION TO 1.5 MGD

BLOWERS
ELECTRICAL PLAN

QUIDDITY
Texas Board of Professional Engineers and Land Surveyors Reg. No. F-23290
912 South Capital of Texas Hwy, Suite 300 • Austin, TX 78746 • 512.441.9493

SCALE: 3/8" = 1'-0" DGN. BY: EFLORES
DATE: MARCH 2026 DWN. BY: MKLENKE
JOB NO. 0A651-0021-02 DWG. NO.
SUBMITTED: SURV. BY:
F.B. NO.

STATE OF TEXAS
BAO LE THIEN TRAN
149385
LICENSED PROFESSIONAL ENGINEER
03/10/2026

9-E-1
SHEET NO. 198 OF 230

C:\Users\tdobbins\DC\ACCDocs\Quiddity - Water-\0A651-0021-02 _ WILBARGER WWTP EXP. 1.5 MGD\Project Files\PLANS\ELEC-A9.dwg, Mar 10, 2026 - 11:38am, tdobbins

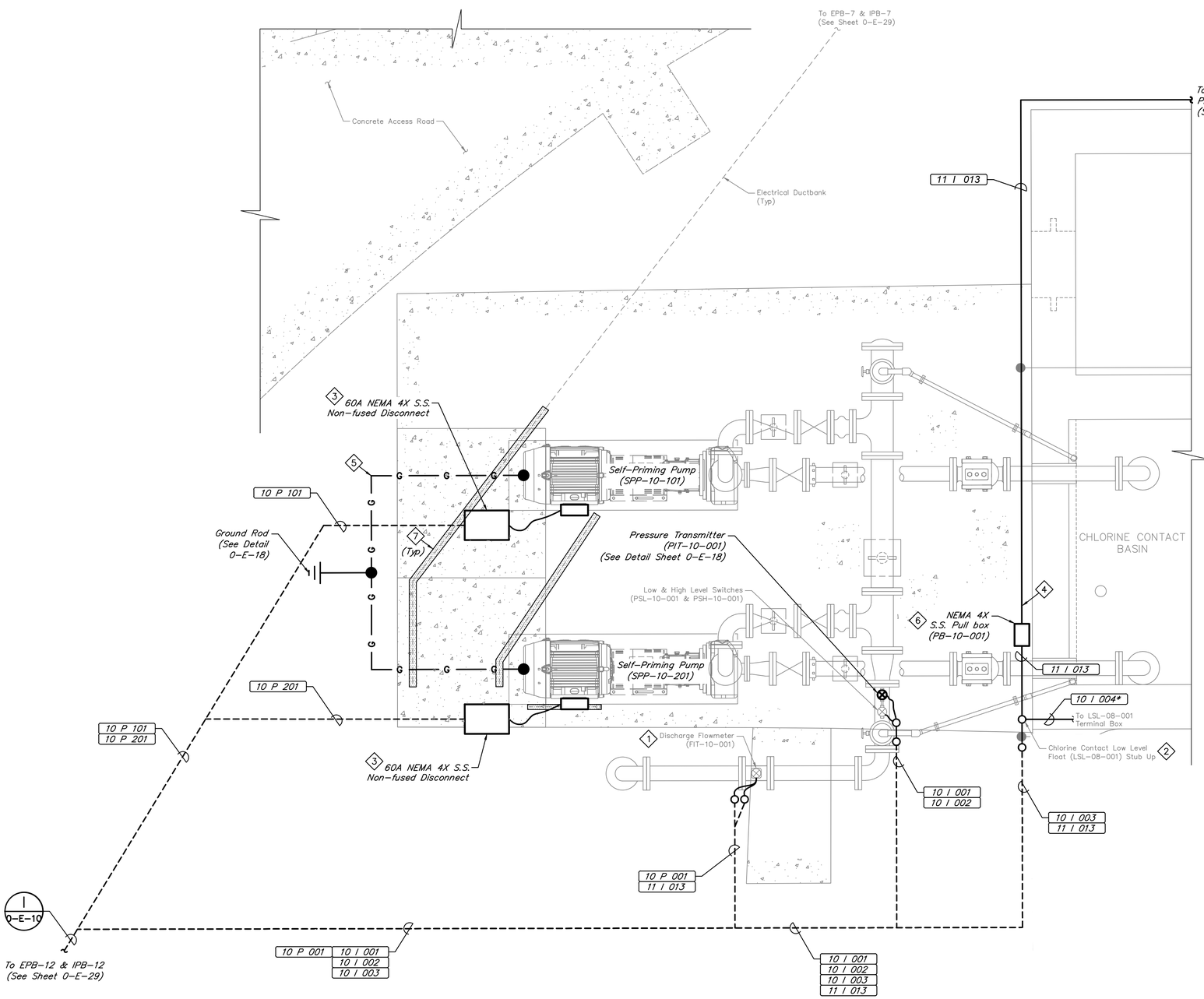

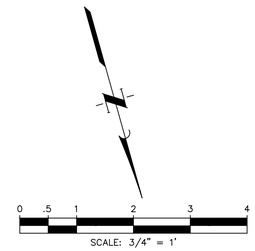

GENERAL NOTES:

1. Existing equipment and utility information is based on available existing plans and site observations. The Contractor shall field verify existing conditions prior to construction and advise the Owner of any discrepancies from the drawings.
2. Not all conduits and wireways are shown for clarity. Refer to schedules, one-line diagram, and control schematics for conduit, wire size and quantity requirements.
3. See Mechanical Sheet 10-M-2 for construction sequencing notes.

ITEMS OF WORK

No.	DESCRIPTION
1	Power and Control signal for the existing Flowmeter are routed in separate conduits. Contractor to ensure that all required conductors are routed to the appropriate destination per the Conduit Schedule. Support proposed conduit with stainless steel unistrut and hardware.
2	Contractor to extend existing conduit routed to Exist Chlorine Contact Basin (CCB) Low Level Float Terminal Box and route to proposed NPW Control Panel (CP-10-001) located inside Dewatering Building. Provide stainless steel hardware and conduit sections as required.
3	Provide disconnect with SPDT Contact. See Structural Sheets for Device Mounting Post Detail.
4	Secure aboveground conduit to side of basin wall every six feet using 316 stainless steel hardware. See Detail Sheet 0-E-20.
5	Install #2 bare copper wire in 1" conduit sleeve from ground rod and bond to motor steel frame. Ground wire shall be directly buried 30" minimum below grade.
6	Install pull box (Min: 6"x6"x4") on basin wall a minimum of 24" above finished floor. Avoid conflict with existing and proposed equipment.
7	Contractor shall demolish any part of the existing duct bank that is in conflict with proposed work in accordance with NPW Construction sequence and/or abandon in place.

LEGEND:

TO BE DEMOLISHED/ABANDONED

NO.	DATE	REVISIONS	APP.

WILBARGER CREEK M.U.D. No. 2
TRAVIS COUNTY, TEXAS

WASTEWATER TREATMENT PLANT
EXPANSION TO 1.5 MGD

NPW ELECTRICAL PLAN

QUIDDITY
Texas Board of Professional Engineers and Land Surveyors Reg. No. F-23290
912 South Capital of Texas Hwy, Suite 300 • Austin, TX 78746 • 512.441.9493

SCALE: 3/4"=1'-0" DGN. BY: EFLORES
DATE: SEPTEMBER 2026 DWN. BY: JSTRUHAR
JOB NO. 0A651-0021-02 DWG. NO.
SUBMITTED: SURV. BY:
F.B. NO.

STATE OF TEXAS
BAO LE THIEN TRAN
149385
LICENSED PROFESSIONAL ENGINEER
09/22/2026

10-E-1
SHEET NO. 199 OF 230

0 1 2 3 4 5 ORIGINAL SCALE IN INCHES FOR REDUCED PLANS

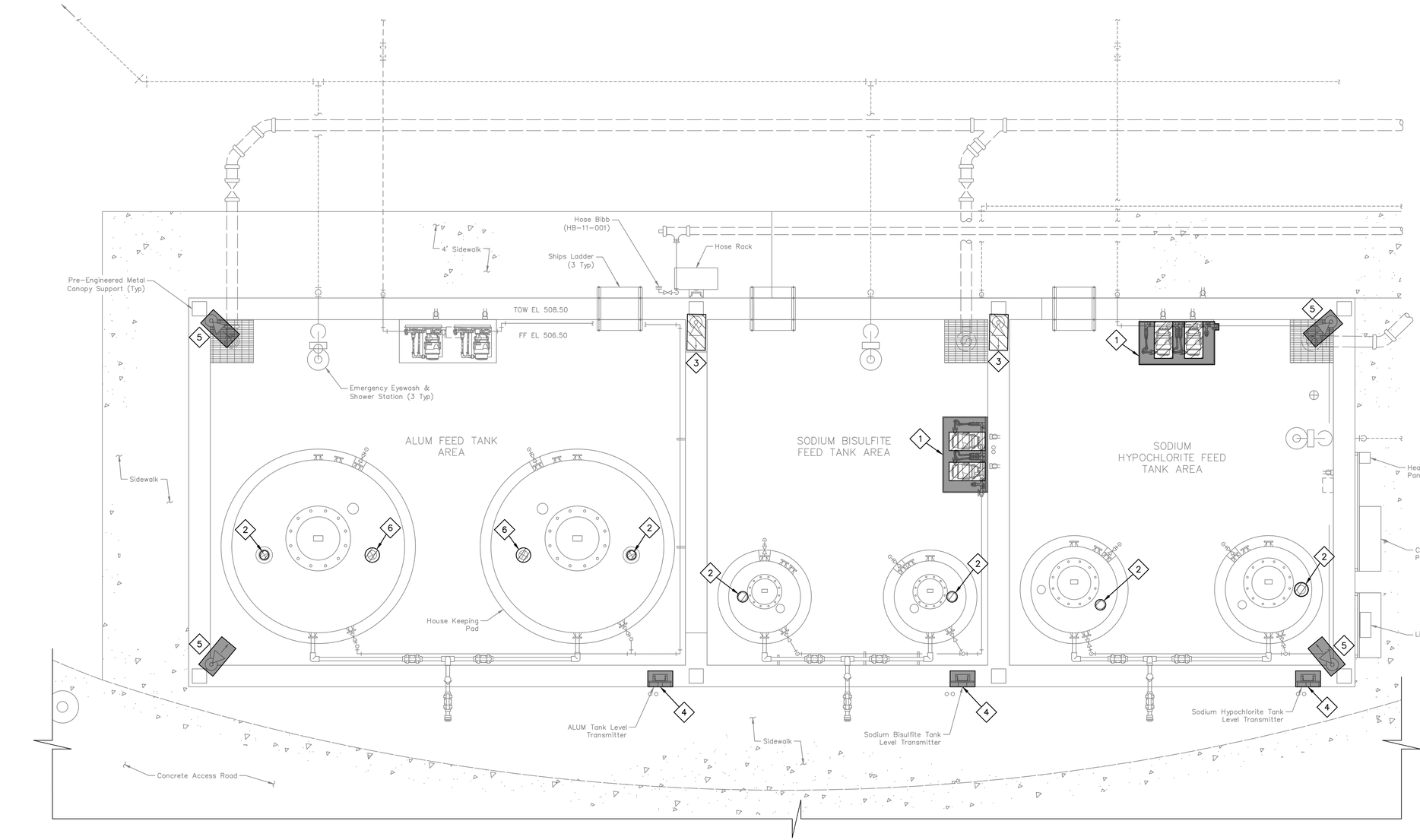

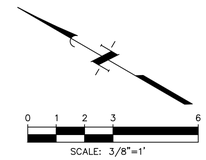

ITEMS OF WORK

No.	DESCRIPTION
1	Demolish pumps and wire to receptacles. Junction box and receptacles to remain on skid and skid to be relocated(see mechanical sheets for scope of work). Above ground conduit and wires associated with receptacle power and controls from main wireway to junction box shall be demolished.
2	Demolish existing transducer and conductors.
3	Demolish all existing lights and associated conductors and aboveground conduit.
4	Level Transmitters shall be relocated and existing mounting post and hardware to be demolished.
5	Salvage existing lights and reinstall as shown on sheet 11-M-2. Demolish conductors and conduit going up corner post. Conduit running along the side wall shall be reused when possible.
6	Demolish existing Alum tank heaters and seal wire entries.

LEGEND:

TO BE DEMOLISHED

REMOVED AND REUSED

NO.	DATE	REVISIONS	APP.

WILBARGER CREEK M.U.D. No. 2
TRAVIS COUNTY, TEXAS

WASTEWATER TREATMENT PLANT EXPANSION TO 1.5 MGD

CHEMICAL SYSTEM ELECTRICAL DEMOLITION PLAN

QUIDDITY
Texas Board of Professional Engineers and Land Surveyors Reg. No. F-23290
912 South Capital of Texas Hwy, Suite 300 • Austin, TX 78746 • 512.441.9493

SCALE:	3/8" = 1'-0"	DGN. BY:	TRB
DATE:	SEPTEMBER 2026	DWN. BY:	JSTRUHAR
JOB NO.	0A651-0021-02	DWG. NO.	
SUBMITTED:		SURV. BY:	
		F.B. NO.	

STATE OF TEXAS
BAO LE THIEN TRAN
149385
LICENSED PROFESSIONAL ENGINEER
09/22/2026

11-E-1
SHEET NO. 200 OF 230

C:\Users\JAS\DC\ACCDocs\Quiddity\0A651-0021-02 _ WILBARGER WWTP EXP. 1.5 MGD\Project Files\PLANS\ELEC-A11.dwg, Jun 22, 2026 - 12:44pm, JAS

ORIGINAL SCALE IN INCHES FOR REDUCED PLANS

0 1 2 3 4 5

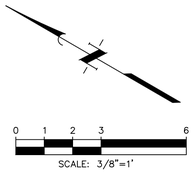

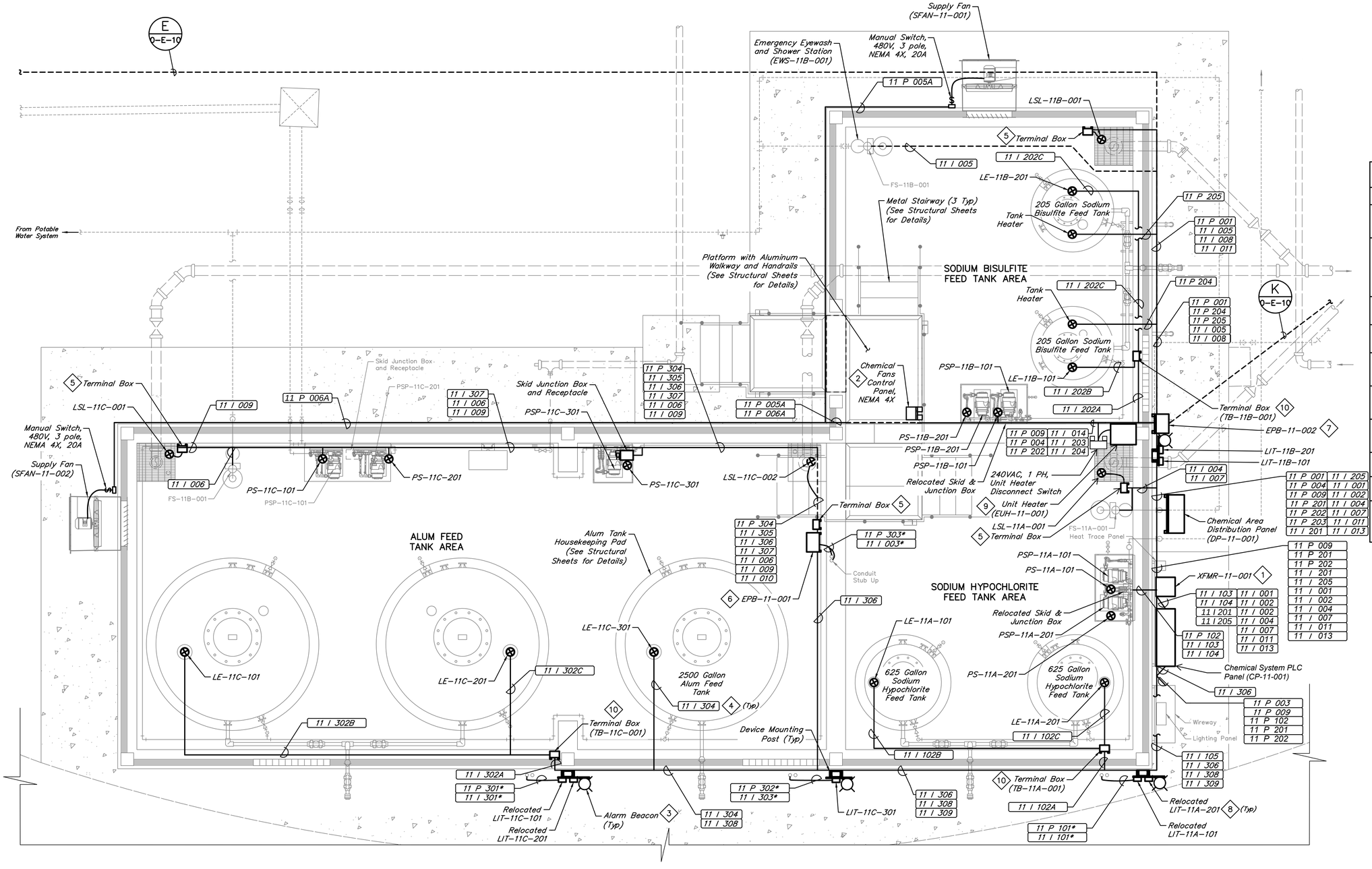

ITEMS OF WORK

No.	DESCRIPTION
1	Mount Transformer on existing rack with stainless steel mounting equipment.
2	Chemical Fans Control Panel shall have Master ON/OFF switch for fans and each fan shall have an HOA switch. In Automatic, the fans will turn on by the Master ON/OFF switch or a signal sent by the PLC panel to run the fans for 5 minutes every hour.
3	Mount alarm beacons on transmitter mounting post.
4	Support conduit going to tanks with S.S. strut and hardware.
5	Float terminal boxes shall be NEMA 4X 316 S.S., 6"H x 6"W x 4"D , and mounted on unistrut post minimum 24" above finished grade.
6	Install Pull Box that is NEMA 4X 316 S.S., 16"H x 12"W x 6"D , and mounted on unistrut post minimum 24" above finished grade.
7	Install Pull Box that is NEMA 4X 316 S.S., 20"H x 16"W x 6"D , and mounted on unistrut post minimum 24" above finished grade.
8	Transmitters will be installed 5' AFF.
9	Mount unit heater to post 10' AFF.
10	Terminal box shall be NEMA 4X 316 S.S., 6"H x 6"W x 4"D. Install 600V, 10A terminal blocks as needed for termination of instrumentation cables. Coil 3' of spare wire from instruments.

NO.	DATE	REVISIONS	APP.

WILBARGER CREEK M.U.D. No. 2
TRAVIS COUNTY, TEXAS

WASTEWATER TREATMENT PLANT EXPANSION TO 1.5 MGD

CHEMICAL SYSTEM ELECTRICAL POWER & INSTRUMENTATION PLAN

QUIDDITY
Texas Board of Professional Engineers and Land Surveyors Reg. No. F-23290
912 South Capital of Texas Hwy, Suite 300 • Austin, TX 78746 • 512.441.9493

SCALE: 3/8" = 1'-0"
DATE: SEPTEMBER 2026
JOB NO. 0A651-0021-02
SUBMITTED:
DGN. BY: TRB
DWN. BY: JSTRUHAR
DWG. NO.
SURV. BY:
F.B. NO.

STATE OF TEXAS
BAO LE THIEN TRAN
149385
LICENSED PROFESSIONAL ENGINEER
09/22/2026

11-E-2
SHEET NO. 201 OF 230

C:\Users\JAS\DC\ACCDocs\Quiddity\0A651-0021-02 _ WILBARGER WWTP EXP. 1.5 MGD\Project Files\PLANS\ELEC-A11.dwg, Jul 01, 2026 - 12:58pm, JAS

ORIGINAL SCALE IN INCHES FOR REDUCED PLANS

0 1 2 3 4 5

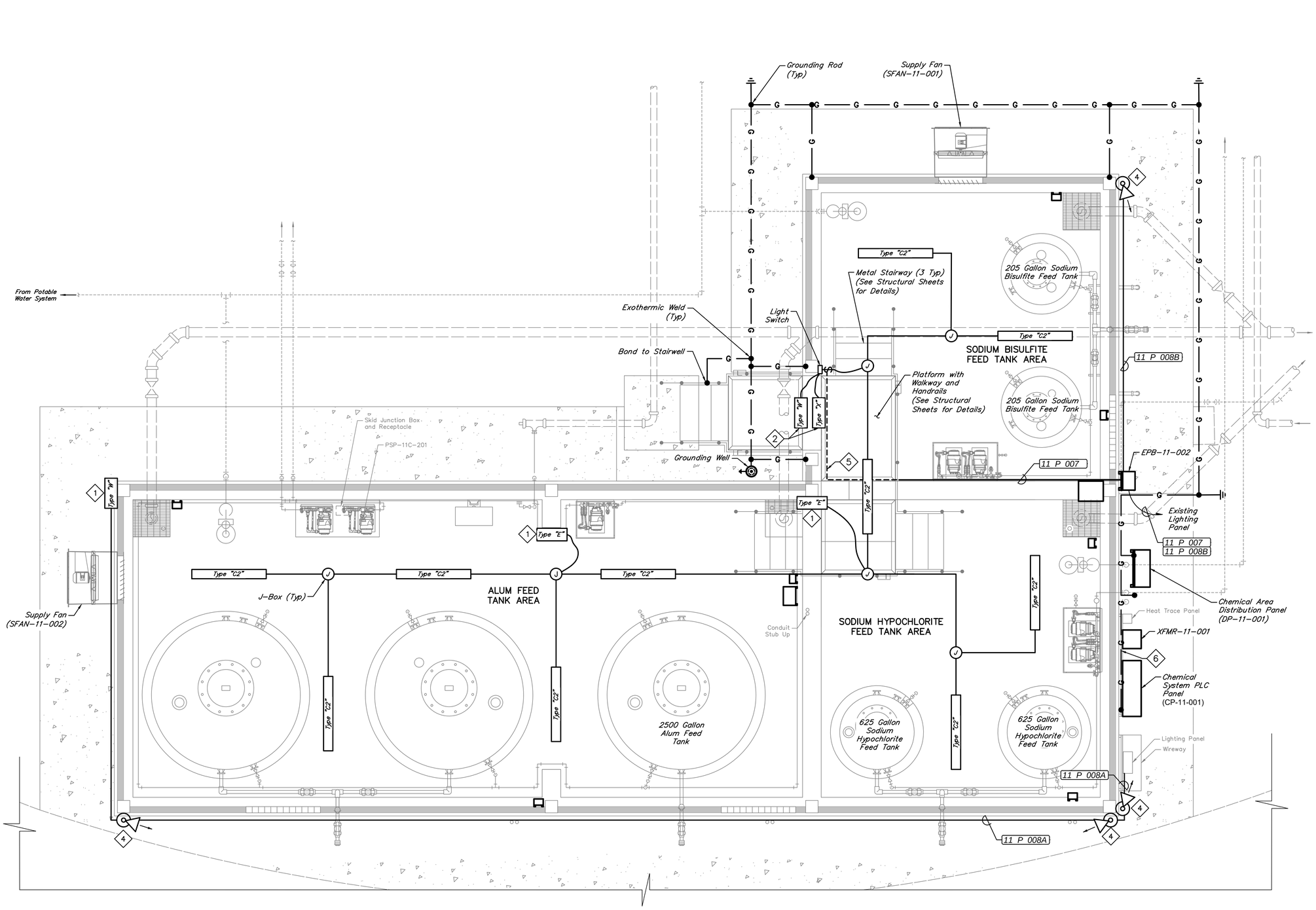

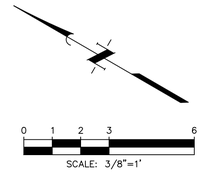

ITEMS OF WORK

No.	DESCRIPTION
1	Mount fixtures 7.5' AFF or 7.5' above metal stair platform if placed over stairs. Fixtures shall be non switched.
2	Mount fixture above door. Fixture shall be non-switched
3	Mount all Type "C2" fixtures 12' AFF, suspended from ceiling joist.
4	Place salvaged lights aimed as shown. Reuse existing conduit and provide new conduit and fittings as needed.
5	Route conduit under walkway.
6	Proposed ground wire shall be above ground on existing sidewalk. Tie new grounding system into existing grounding system.

NO.	DATE	REVISIONS	APP.

WILBARGER CREEK M.U.D. No. 2
TRAVIS COUNTY, TEXAS

WASTEWATER TREATMENT PLANT
EXPANSION TO 1.5 MGD

CHEMICAL SYSTEM ELECTRICAL LIGHTING & GROUNDING PLAN

QUIDDITY
Texas Board of Professional Engineers and Land Surveyors Reg. No. F-23290
912 South Capital of Texas Hwy, Suite 300 • Austin, TX 78746 • 512.441.9493

SCALE: 3/8" = 1'-0"
DATE: SEPTEMBER 2026
JOB NO. 0A651-0021-02
SUBMITTED:

DGN. BY: TRB
DWN. BY: JSTRUHAR
DWG. NO.
SURV. BY:
F.B. NO.

STATE OF TEXAS
BAO LE THIEN TRAN
149385
LICENSED PROFESSIONAL ENGINEER
09/22/2026

11-E-3
SHEET NO. 202 OF 230

C:\Users\JAS\DC\ACCDocs\Quiddity\0A651-0021-02 _ WILBARGER WWTP EXP. 1.5 MGD\Project Files\PLANS\ELEC-A11.dwg, Jun 22, 2026 - 2:40pm, JAS

0 1 2 3 4 5 ORIGINAL SCALE IN INCHES FOR REDUCED PLANS

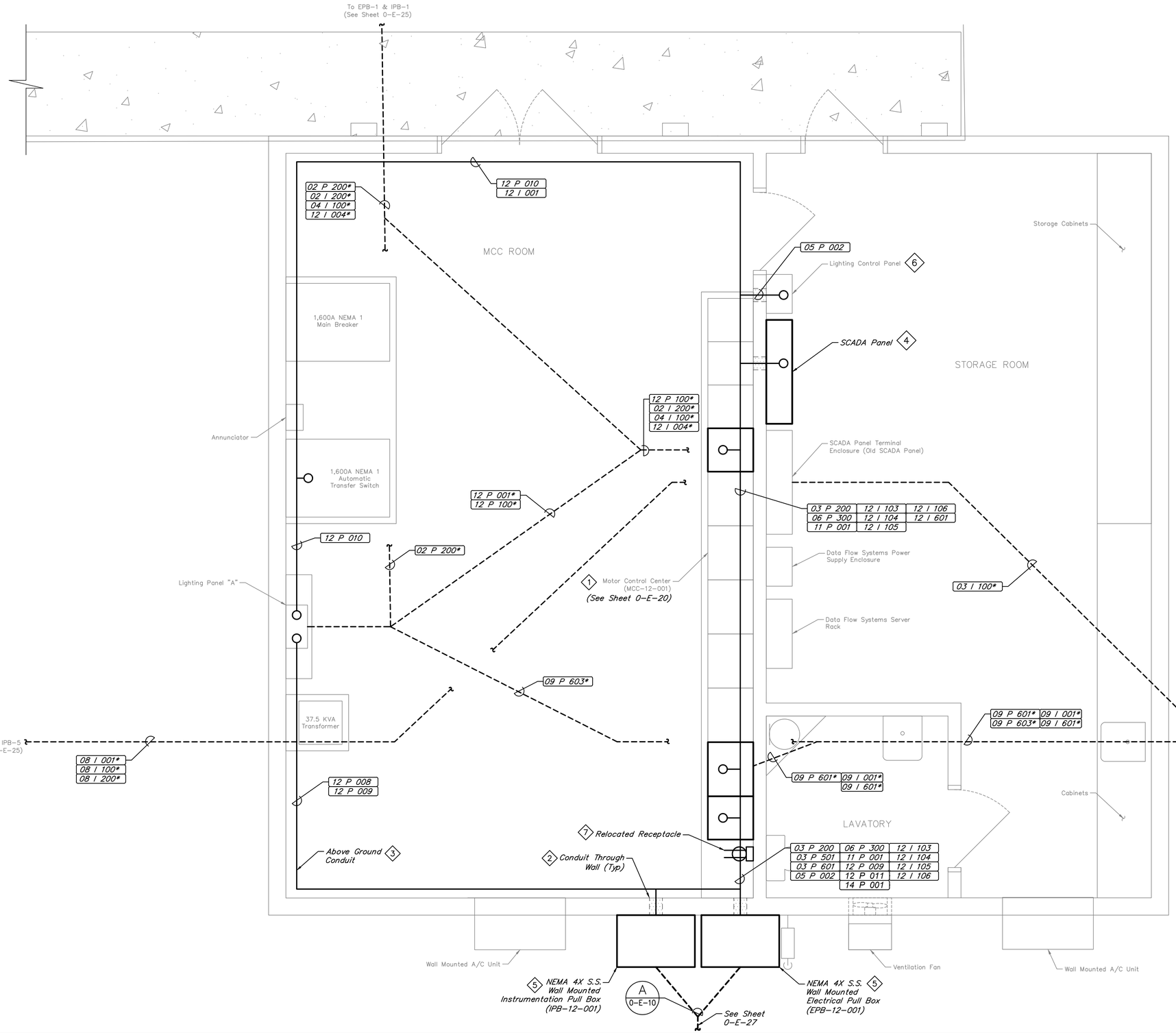

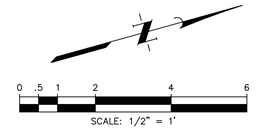

GENERAL NOTES:

1. Existing equipment and utility information is based on available existing plans and site observations. The Contractor shall field verify existing conditions prior to construction and advise the Owner of any discrepancies from the drawings.
2. Not all conduits and wireways are shown for clarity. Refer to schedules, one-line diagram, and control schematics for conduit, wire size and quantity requirements.
3. Contractor shall minimize system downtime as much as possible during installation of proposed MCC sections and buckets. The maximum allowable downtime is 4 hours at a time and it is the responsibility of the Contractor to notify the Operator and Engineer in writing a minimum of 14 days prior to any scheduled shutdown. Contractor shall include, all relevant information including duration of shutdown and if multiple shutdowns are required. Contractor may not initiate shutdown without written approval from both the Operator and the Engineer.

ITEMS OF WORK	
No.	DESCRIPTION
1	The existing Motor Control Center (MCC-12-001) is a Square D Model 6, 480V, 1,600A horizontal bus rating, 300A vertical bus rating; factory order number: 43839697-002. Contractor shall coordinate with Schneider Electric to provide and install new Buckets and MCC sections as needed. See Detail Sheet 0-E-20.
2	Seal all penetration to the existing Electrical Building with non-shrink grout. See Detail Sheet 0-E-20.
3	Support above ground conduit every 6 feet using stainless steel unistrut and hardware.
4	Proposed SCADA Panel shall be installed adjacent to existing SCADA Terminal Enclosure (Old SCADA Panel). Contractor shall transfer signals one at a time via existing and proposed wireways. Contractor shall perform a loop check on each signal after terminating to ensure proper functionality prior to moving on to the next signal. See Detail Sheet 0-E-21 for elevation detail.
5	NEMA 4X S.S. wall mounted pull boxes shall be sized per NEC. Pull boxes shall be mounted a minimum of 9 ft above finished grade and secured to wall using stainless steel unistrut and hardware. Anchoring for support struts shall be placed on CMU, not on grout.
6	Contractor shall shift location of Lighting Control Panel as needed to provide enough space for proposed SCADA Panel. If panel is shifted, contractor shall provide terminal box to wire all existing conductors and routed new conduit and conductors from the terminal box to the lighting control panel. See Detail Sheet 0-E-21 for elevation detail.
7	Contractor shall remove and relocate existing receptacle in conflict with proposed MCC sections. Provide additional conduit, conductors and mounting hardware as needed.

NO.	DATE	REVISIONS	APP.

WILBARGER CREEK M.U.D. No. 2
TRAVIS COUNTY, TEXAS

WASTEWATER TREATMENT PLANT
EXPANSION TO 1.5 MGD

ELECTRICAL BUILDING ELECTRICAL PLAN

QUIDDITY
Texas Board of Professional Engineers and Land Surveyors Reg. No. F-23290
912 South Capital of Texas Hwy, Suite 300 • Austin, TX 78746 • 512.441.9493

SCALE:	1/2" = 1'-0"	DGN. BY:	EFLORES
DATE:	SEPTEMBER 2026	DWN. BY:	JSTRUHAR
JOB NO.	0A651-0021-02	DWG. NO.	
SUBMITTED:		SURV. BY:	
		F.B. NO.	

STATE OF TEXAS
BAO LE THIEN TRAN
149385
LICENSED PROFESSIONAL ENGINEER
09/22/2026

12-E-1
SHEET NO. 203 OF 230

C:\Users\tdobbins\DC\ACCDocs\Quiddity - Water-\0A651-0021-02 _ WILBARGER WWTP EXP. 1.5 MGD\Project Files\PLANS\ELEC-A12.dwg, Mar 10, 2026 - 11:13am, tdobbins

0 1 2 3 4 5 ORIGINAL SCALE IN INCHES FOR REDUCED PLANS

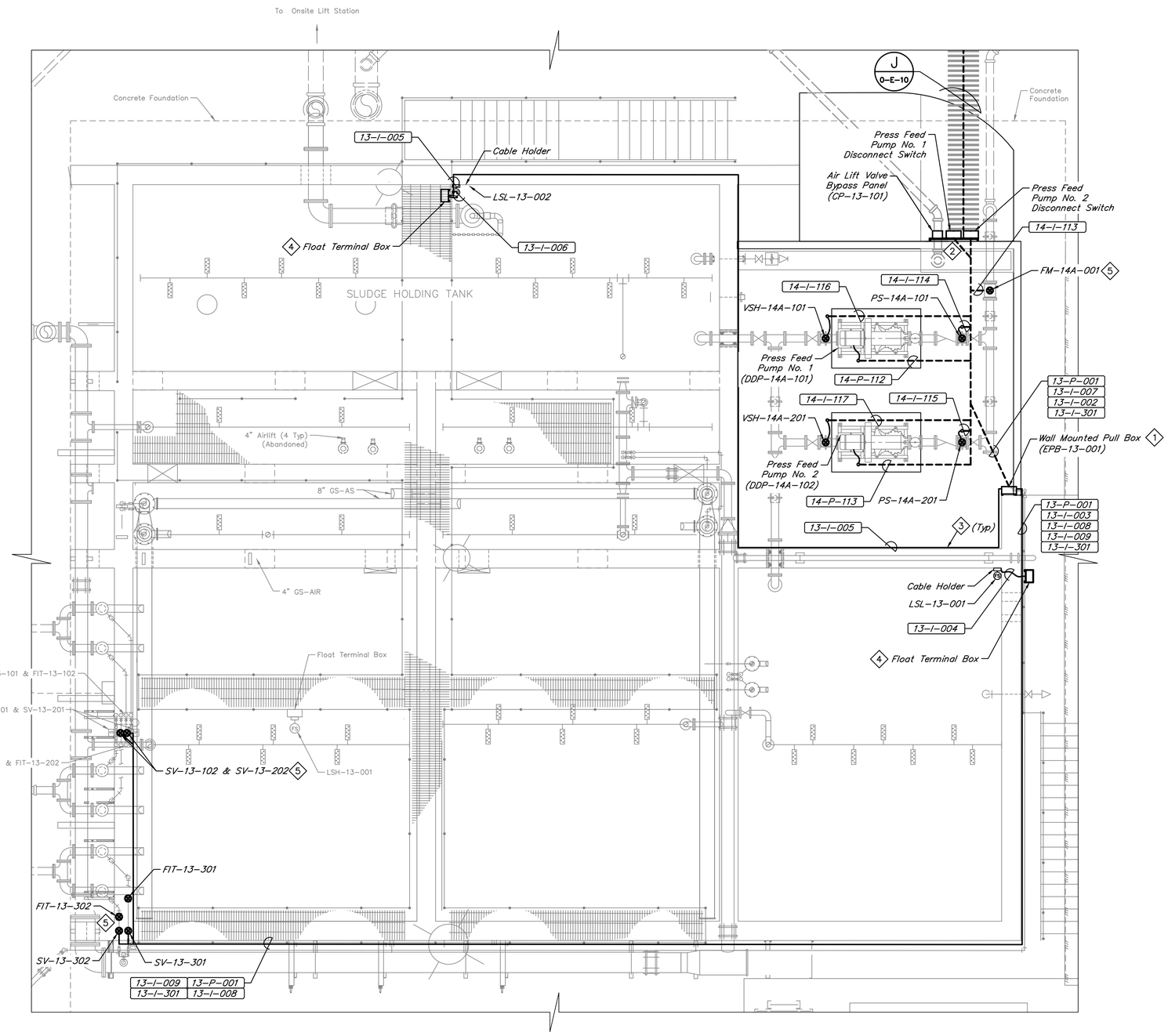

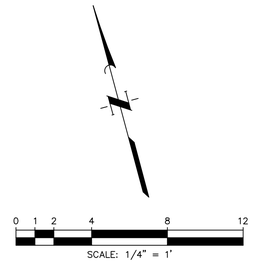

ITEMS OF WORK	
No.	DESCRIPTION
1	Install Pull Box that is NEMA 4X 316 S.S., 16"H x 12"W x 6"D, and mounted on basin wall so that bottom of box is minimum 4' AFG.
2	Mount Disconnect switches and Air Lift Valve Bypass Panel (CP-13-101) so bottom of enclosure is 4' AFF and on the same rack using stainless steel supports and hardware.
3	Provide stainless steel hardware and unistrut for all above ground conduit supports. See Detail Sheet 0-E-19.
4	Float terminal boxes shall be NEMA 4X 316 S.S., 6"H x 6"W x 4"D , and mounted 4' above basin grating.
5	See Mechanical sheets for exact location of flowmeters/solenoid valves and installation detail

GENERAL NOTES:

1. Existing equipment and utility information is based on available existing plans and site observations. The Contractor shall field verify existing conditions prior to construction and advise the Owner of any discrepancies from the drawings..
2. Not all conduits and wireways are shown for clarity. Refer to schedules, one-line diagram, and control schematics for conduit, wire size and quantity requirements.
3. Conduit routing is diagrammatically shown. Contractor to coordinate with the equipment supplier to field route conduits accordingly.
4. Contractor shall provide additional conduits and wires from the control panel to all additional equipment as required by the approved screen manufacturer at no additional cost to the owner.
5. Contractor to provide and install explosion proof EYS seals for all conduits leaving and entering a hazardous area.

NO.	DATE	REVISIONS	APP.

WILBARGER CREEK M.U.D. No. 2
TRAVIS COUNTY, TEXAS

WASTEWATER TREATMENT PLANT EXPANSION TO 1.5 MGD

SLUDGE HOLDING TANKS ELECTRICAL PLAN

QUIDDITY
Texas Board of Professional Engineers and Land Surveyors Reg. No. F-23290
912 South Capital of Texas Hwy, Suite 300 • Austin, TX 78746 • 512.441.9493

SCALE:	1/4" = 1'-0"	DGN. BY:	EFLORES
DATE:	SEPTEMBER 2026	DWN. BY:	JSTRUHAR
JOB NO.	0A651-0021-02	DWG. NO.	
SUBMITTED:		SURV. BY:	
		F.B. NO.	

STATE OF TEXAS
BAO LE THIEN TRAN
149385
LICENSED PROFESSIONAL ENGINEER
09/22/2026

13-E-1
SHEET NO. 204 OF 230

C:\Users\tdobbins\DC\ACCDocs\Quiddity - Water-\0A651-0021-02 _ WILBARGER WWTP EXP. 1.5 MGD\Project Files\PLANS\ELEC-A13.dwg, Mar 10, 2026 - 11:14am, tdobbins

0 1 2 3 4 5 ORIGINAL SCALE IN INCHES FOR REDUCED PLANS

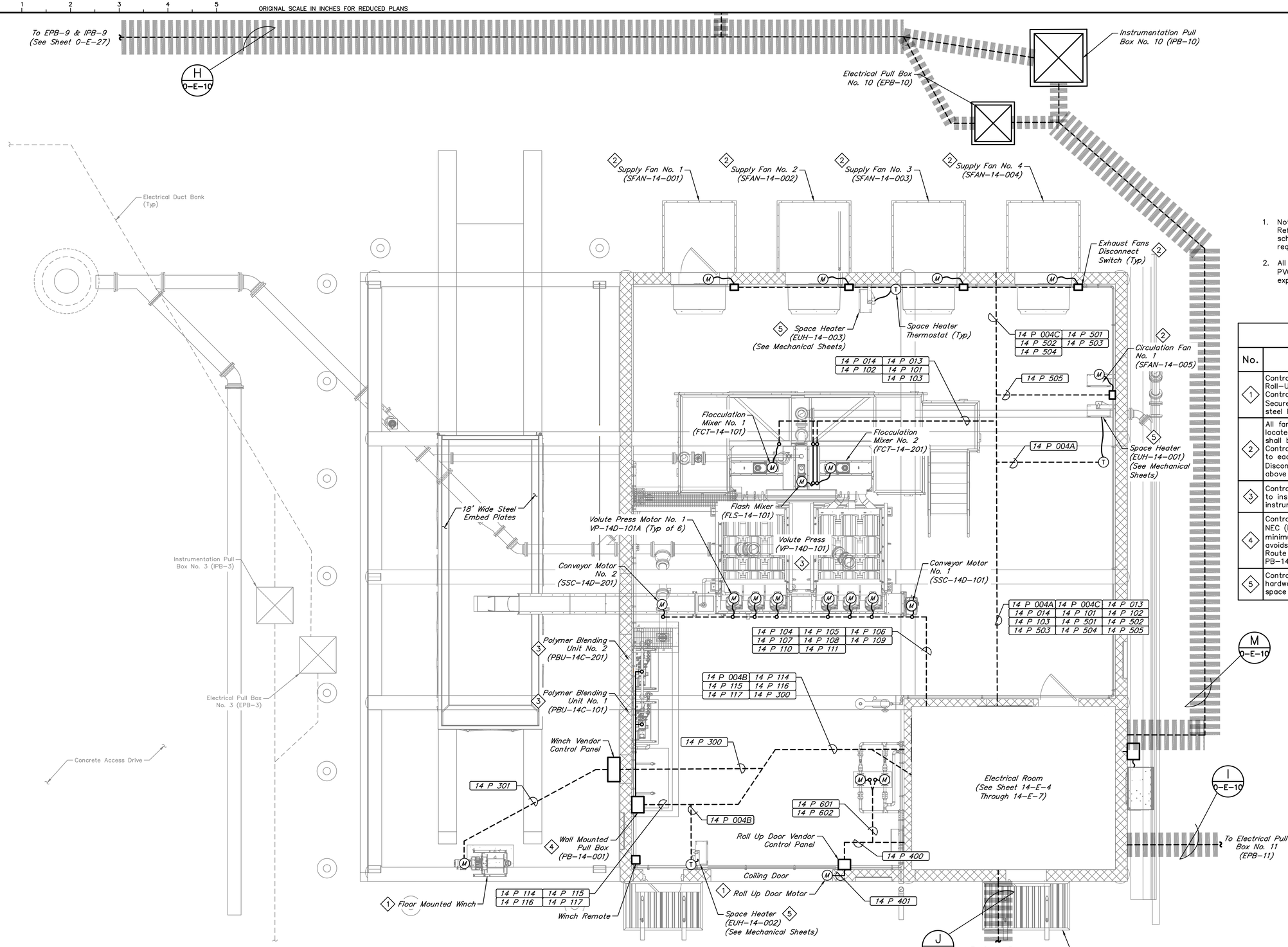

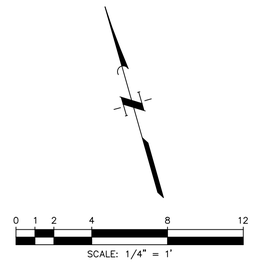

GENERAL NOTES:

1. Not all conduits and wireways are shown for clarity. Refer to schedules, one-line diagram, and control schematics for conduit, wire size and quantity requirements.
2. All above ground conduit in Dewatering Area shall be PVC coated rigid galvanized steel (RGS) with EYS explosive proof seal.

ITEMS OF WORK

No.	DESCRIPTION
1	Contractor to field route conduit and conducts from Roll-Up Door Control Panel and Floor Mounted Winch Control panel to their respective motors as needed. Secure above ground conduit every 6' using stainless steel hardware.
2	All fans shall be manually control via ON/OFF switch located in the Dewatering Fan Control Panel and power shall be routed from Control Panel to each fan. Contractor shall provide disconnect switch located locally to each fan with the appropriate voltage and amp rating. Disconnect switch shall be mounted a minimum of 5' above finished ground.
3	Contractor shall coordinate with equipment manufacture to install all related equipment, all required power and instrumentation devices as needed.
4	Contractor to provide pull box (PB-14-001) sized per NEC (Min: 12"x16"x16"). Pull box shall be installed a minimum of 6' above finished floor in a location that avoids conflict with Louver and Civil Piping in that area. Route wall mounted above ground conduit from PB-14-001 to Polymer Terminal Boxes.
5	Contractor shall provide stainless steel unistrut and hardware to wall mount space heater and thermostat. All space heaters shall be thermostat controlled.

NO.	DATE	REVISIONS	APP.

WILBARGER CREEK M.U.D. No. 2
TRAVIS COUNTY, TEXAS

WASTEWATER TREATMENT PLANT
EXPANSION TO 1.5 MGD

DEWATERING BUILDING POWER PLAN

QUIDDITY
Texas Board of Professional Engineers and Land Surveyors Reg. No. F-23290
912 South Capital of Texas Hwy, Suite 300 • Austin, TX 78746 • 512.441.9493

SCALE: 1/4" = 1'-0" DGN. BY: EFLORES
DATE: SEPTEMBER 2026 DWN. BY: JSTRUHAR
JOB NO. 0A651-0021-02 DWG. NO.
SUBMITTED: SURV. BY:
F.B. NO.



09/22/2026

14-E-1
SHEET NO. 205 OF 230

C:\Users\JAS\DC\ACCDocs\Quiddity\0A651-0021-02 _ WILBARGER WWTP EXP. 1.5 MGD\Project Files\PLANS\ELEC-A14.dwg, Feb 20, 2026 - 3:20pm, JAS

0 1 2 3 4 5 ORIGINAL SCALE IN INCHES FOR REDUCED PLANS

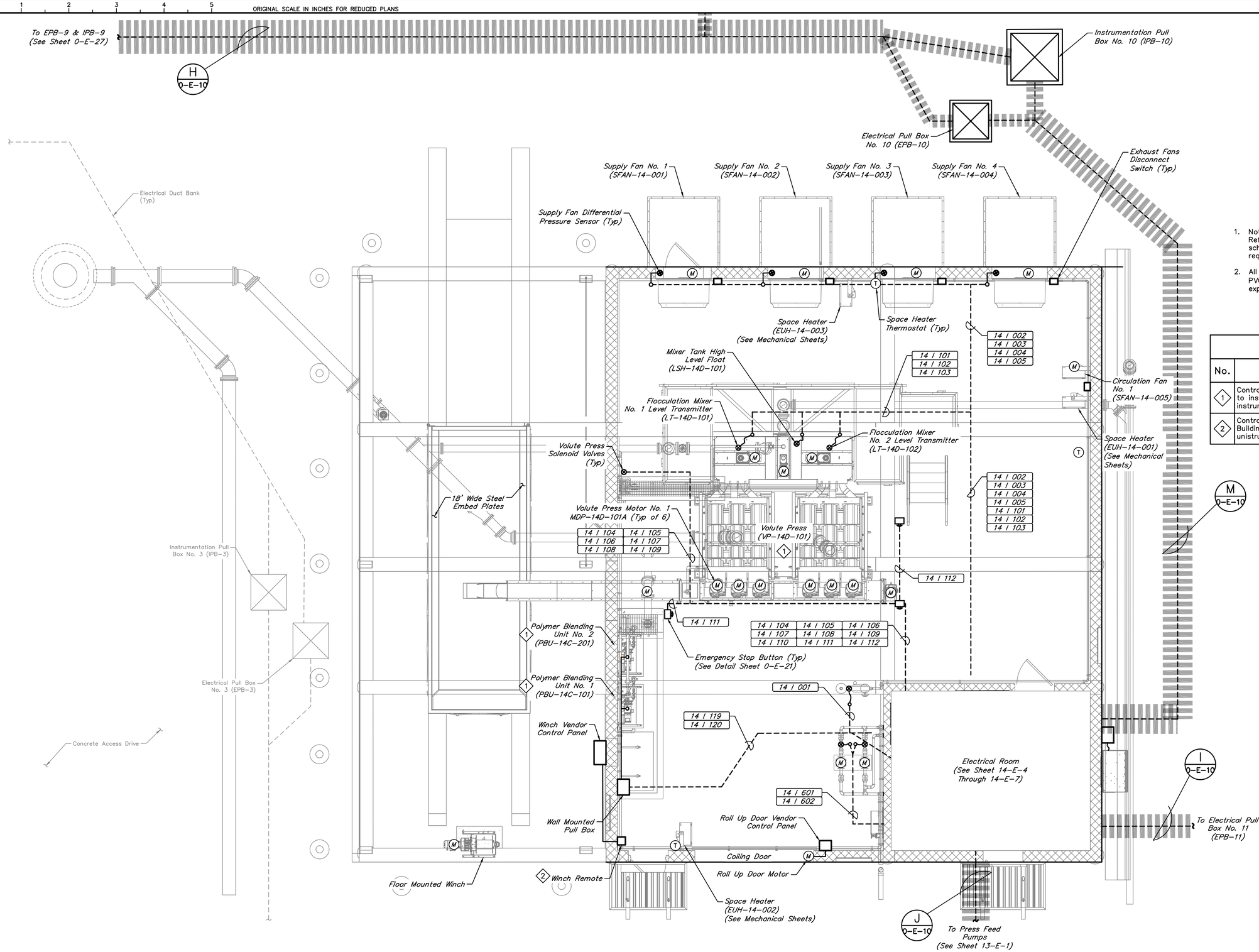

0 1 2 4 8 12
SCALE: 1/4" = 1'

GENERAL NOTES:

1. Not all conduits and wireways are shown for clarity. Refer to schedules, one-line diagram, and control schematics for conduit, wire size and quantity requirements.
2. All above ground conduit in Dewatering Area shall be PVC coated rigid galvanized steel (RGS) with EYS explosive proof seal.

ITEMS OF WORK	
No.	DESCRIPTION
1	Contractor shall coordinate with equipment manufacture to install all related equipment, all required power and instrumentation devices as needed.
2	Contractor shall install Winch Remote inside Dewatering Building mounted to wall. Provide Conduit, stainless steel unistrut, and hardware as needed.

NO.	DATE	REVISIONS	APP.

WILBARGER CREEK M.U.D. No. 2
TRAVIS COUNTY, TEXAS

WASTEWATER TREATMENT PLANT
EXPANSION TO 1.5 MGD

DEWATERING BUILDING INSTRUMENTATION PLAN

QUIDDITY
Texas Board of Professional Engineers and Land Surveyors Reg. No. F-23290
912 South Capital of Texas Hwy, Suite 300 • Austin, TX 78746 • 512.441.9493

SCALE: 1/4" = 1'-0" DGN. BY: EFLORES
DATE: SEPTEMBER 2026 DWN. BY: JSTRUHAR
JOB NO. 0A651-0021-02 DWG. NO.
SUBMITTED: SURV. BY:
F.B. NO.

STATE OF TEXAS
BAO LE THIEN TRAN
149385
LICENSED PROFESSIONAL ENGINEER
09/22/2026

14-E-2
SHEET NO. 206 OF 230

C:\Users\JAS\DC\ACCDocs\Quiddity\0A651-0021-02 _ WILBARGER WWTP EXP. 1.5 MGD\Project Files\PLANS\ELEC-A14.dwg, Jun 30, 2026 - 5:13pm, JAS

ORIGINAL SCALE IN INCHES FOR REDUCED PLANS

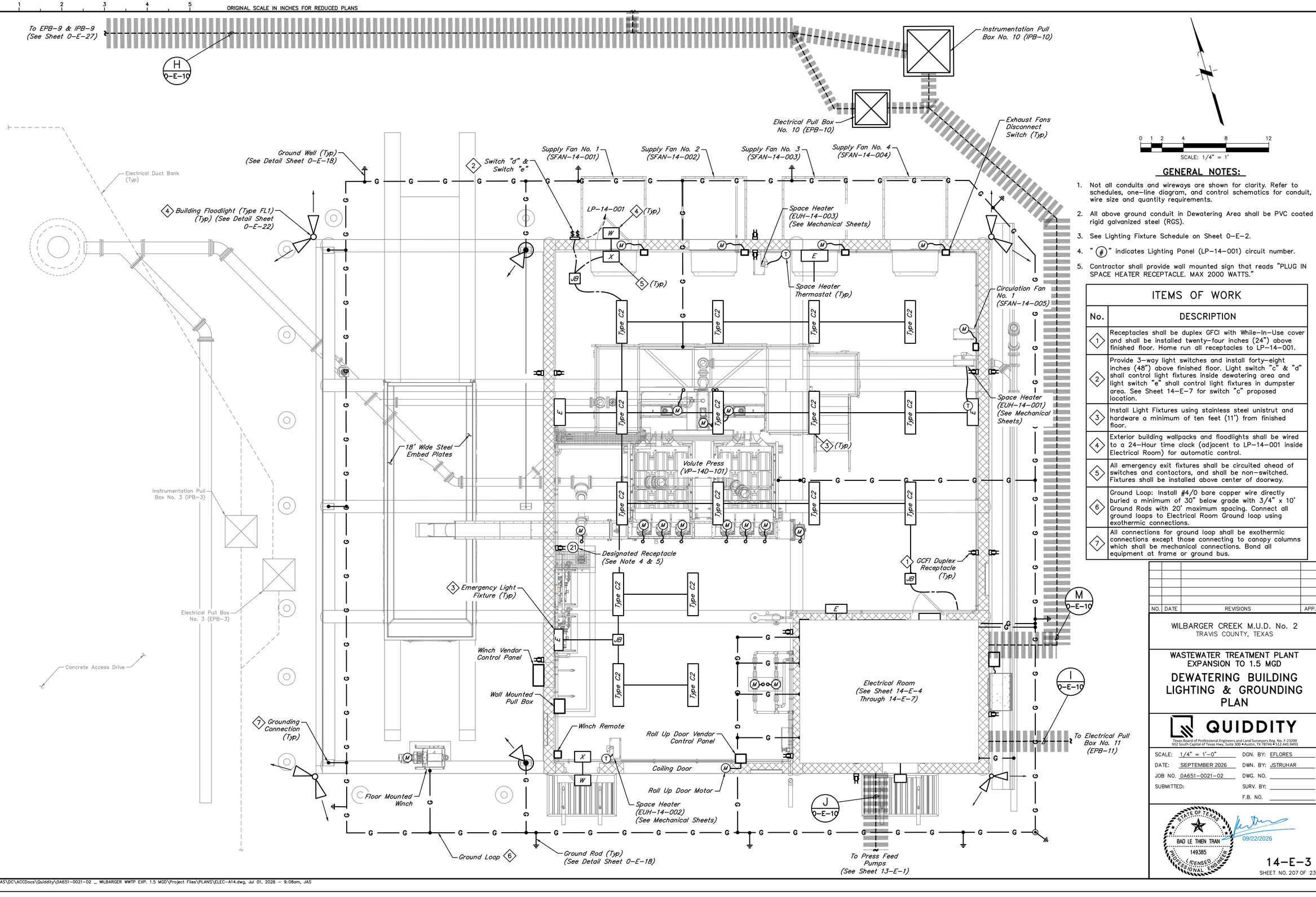

0 1 2 4 8 12

SCALE: 1/4" = 1'

GENERAL NOTES:

1. Not all conduits and wireways are shown for clarity. Refer to schedules, one-line diagram, and control schematics for conduit, wire size and quantity requirements.
2. All above ground conduit in Dewatering Area shall be PVC coated rigid galvanized steel (RGS).
3. See Lighting Fixture Schedule on Sheet 0-E-2.
4. "(#)" indicates Lighting Panel (LP-14-001) circuit number.
5. Contractor shall provide wall mounted sign that reads "PLUG IN SPACE HEATER RECEPTACLE. MAX 2000 WATTS."

ITEMS OF WORK

No.	DESCRIPTION
1	Receptacles shall be duplex GFCI with While-In-Use cover and shall be installed twenty-four inches (24") above finished floor. Home run all receptacles to LP-14-001.
2	Provide 3-way light switches and install forty-eight inches (48") above finished floor. Light switch "c" & "d" shall control light fixtures inside dewatering area and light switch "e" shall control light fixtures in dumpster area. See Sheet 14-E-7 for switch "c" proposed location.
3	Install Light Fixtures using stainless steel unistrut and hardware a minimum of ten feet (11') from finished floor.
4	Exterior building wallpacks and floodlights shall be wired to a 24-Hour time clock (adjacent to LP-14-001 inside Electrical Room) for automatic control.
5	All emergency exit fixtures shall be circuited ahead of switches and contactors, and shall be non-switched. Fixtures shall be installed above center of doorway.
6	Ground Loop: Install #4/0 bare copper wire directly buried a minimum of 30" below grade with 3/4" x 10' Ground Rods with 20' maximum spacing. Connect all ground loops to Electrical Room Ground loop using exothermic connections.
7	All connections for ground loop shall be exothermic connections except those connecting to canopy columns which shall be mechanical connections. Bond all equipment at frame or ground bus.

NO.	DATE	REVISIONS	APP.

WILBARGER CREEK M.U.D. No. 2
TRAVIS COUNTY, TEXAS

WASTEWATER TREATMENT PLANT EXPANSION TO 1.5 MGD

DEWATERING BUILDING LIGHTING & GROUNDING PLAN

QUIDDITY
Texas Board of Professional Engineers and Land Surveyors Reg. No. F-23290
912 South Capital of Texas Hwy, Suite 300 • Austin, TX 78746 • 512.441.9493

SCALE:	1/4" = 1'-0"	DGN. BY:	EFLORES
DATE:	SEPTEMBER 2026	DWN. BY:	JSTRUHAR
JOB NO.	0A651-0021-02	DWG. NO.	
SUBMITTED:		SURV. BY:	
		F.B. NO.	

STATE OF TEXAS
BAO LE THIEN TRAN
149385
LICENSED PROFESSIONAL ENGINEER
09/22/2026

14-E-3
SHEET NO. 207 OF 230

C:\Users\JAS\DC\ACCDocs\Quiddity\0A651-0021-02 _ WILBARGER WWTP EXP. 1.5 MGD\Project Files\PLANS\ELEC-A14.dwg, Jul 01, 2026 - 9:08am, JAS

0 1 2 3 4 5 ORIGINAL SCALE IN INCHES FOR REDUCED PLANS

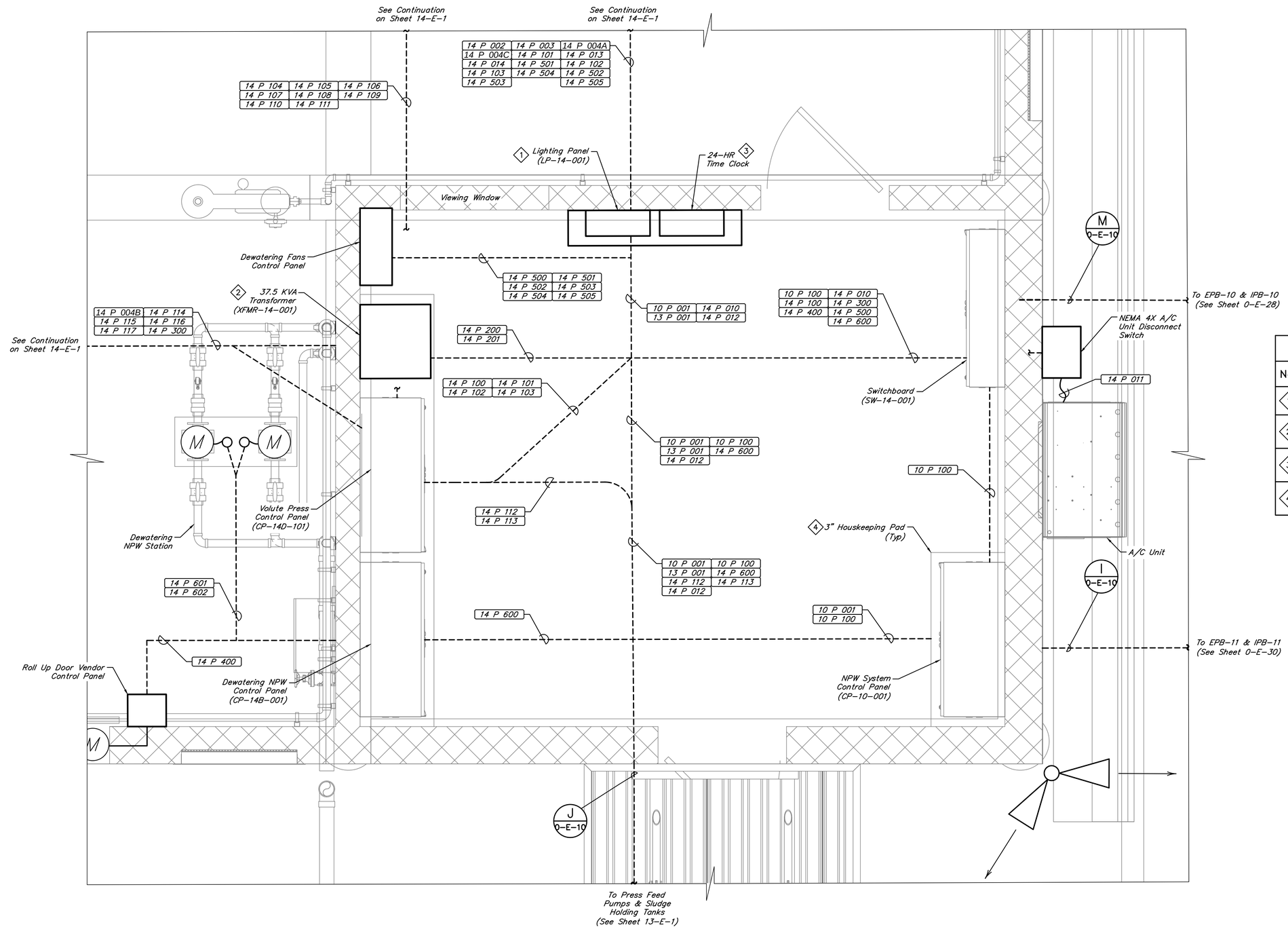

0 .5 1 2 3 4

SCALE: 3/4" = 1'

GENERAL NOTES:

1. Not all conduits and wireways are shown for clarity. Refer to schedules, one–line diagram, and control schematics for conduit, wire size and quantity requirements.
2. All above ground conduit in Dewatering Area shall be PVC coated rigid galvanized steel (RGS).

ITEMS OF WORK

No.	DESCRIPTION
1	Install a NEMA 1 gutter, dimensions as required, under LP–14–001 to combine conduits. Size conduits per NEC.
2	Provide the minimum clearance required around all sides of the step–down transformer per the manufacturers requirements.
3	Install 24–Hour time clock adjacent to LP–14–001 and wire to external wall packs and floodlights for automatic lighting control.
4	Contractor shall adjust size of housekeeping pad to maintain a minimum of 3" from edge of approved control panels.

NO.	DATE	REVISIONS	APP.

WILBARGER CREEK M.U.D. No. 2
TRAVIS COUNTY, TEXAS

WASTEWATER TREATMENT PLANT
EXPANSION TO 1.5 MGD

DEWATERING BUILDING ELECTRICAL ROOM POWER PLAN

QUIDDITY
Texas Board of Professional Engineers and Land Surveyors Reg. No. F-23290
912 South Capital of Texas Hwy, Suite 300 • Austin, TX 78746 • 512.441.9493

SCALE: 3/4" = 1'–0" DGN. BY: EFLORES
DATE: SEPTEMBER 2026 DWN. BY: JSTRUHAR
JOB NO. 0A651–0021–02 DWG. NO.
SUBMITTED: SURV. BY:
F.B. NO.

STATE OF TEXAS
BAO LE THIEN TRAN
149385
LICENSED PROFESSIONAL ENGINEER
09/22/2026

14–E–4
SHEET NO. 208 OF 230

C:\Users\JAS\DC\ACCDocs\Quiddity\0A651–0021–02 _ WILBARGER WWTP EXP. 1.5 MGD\Project Files\PLANS\ELEC–A14.dwg, Jul 01, 2026 – 2:11pm, JAS

0 1 2 3 4 5 ORIGINAL SCALE IN INCHES FOR REDUCED PLANS

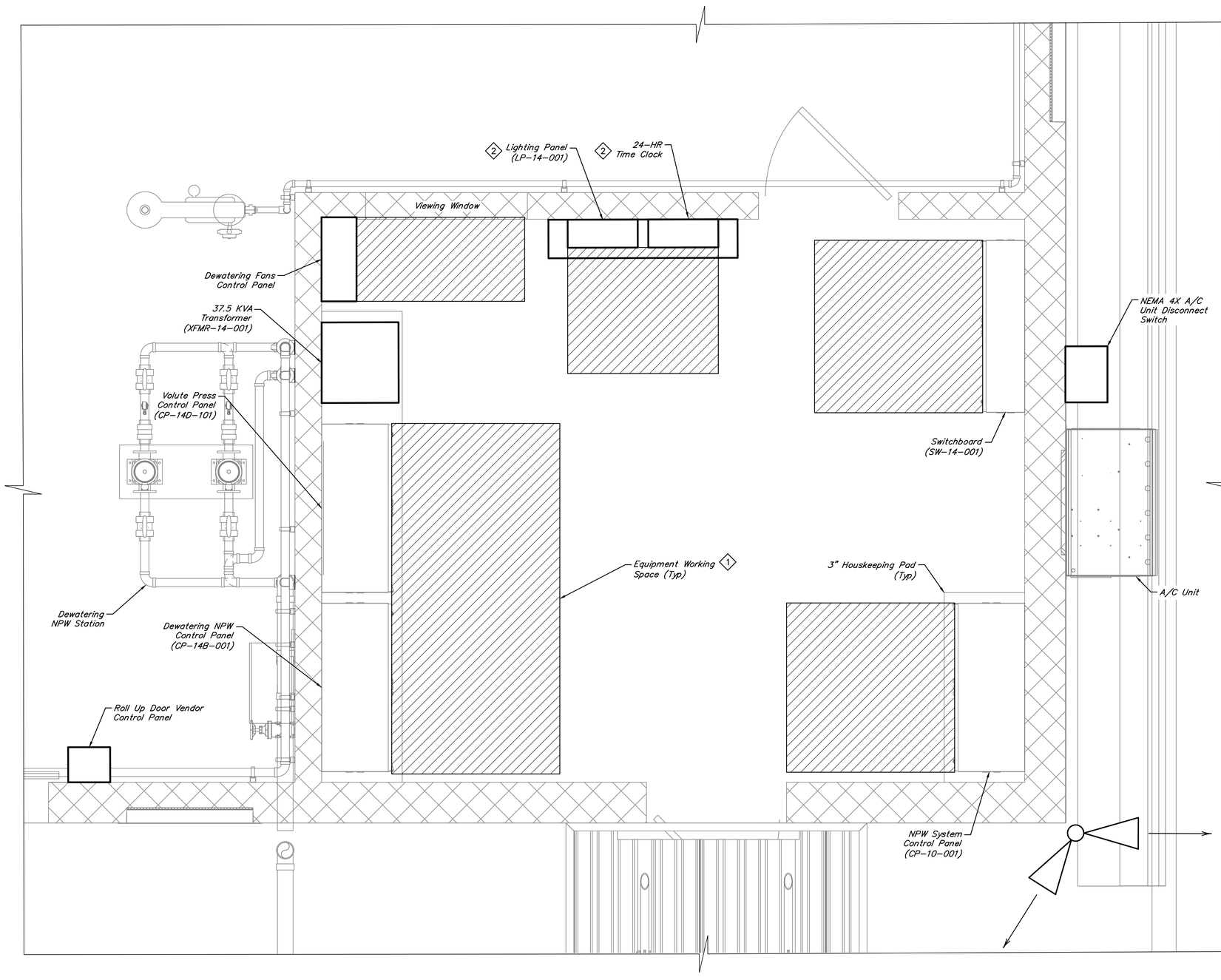

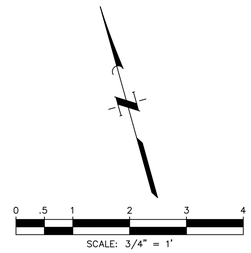

GENERAL NOTES:

1. Not all conduits and wireways are shown for clarity. Refer to schedules, one-line diagram, and control schematics for conduit, wire size and quantity requirements.
2. All above ground conduit in Dewatering Area shall be PVC coated rigid galvanized steel (RGS).
3. All working space area is 48" deep (4'-0") unless otherwise noted.

ITEMS OF WORK	
No.	DESCRIPTION
1	Provide 6" wide anti-slip yellow/black tape to mark the boundary of the working space.
2	Working space area is 36" deep (3'-0").

NO.	DATE	REVISIONS	APP.

WILBARGER CREEK M.U.D. No. 2
TRAVIS COUNTY, TEXAS

WASTEWATER TREATMENT PLANT
EXPANSION TO 1.5 MGD

DEWATERING BUILDING ELECTRICAL ROOM WORKING SPACE PLAN

QUIDDITY
Texas Board of Professional Engineers and Land Surveyors Reg. No. F-23290
912 South Capital of Texas Hwy, Suite 300 • Austin, TX 78746 • 512.441.9493

SCALE: 3/4" = 1'-0" DGN. BY: EFLORES
DATE: JULY 2026 DWN. BY: JSTRUHAR
JOB NO. 0A651-0021-02 DWG. NO.
SUBMITTED: SURV. BY:
F.B. NO.

STATE OF TEXAS
BAO LE THIEN TRAN
149385
LICENSED PROFESSIONAL ENGINEER
07/01/2026

14-E-5
SHEET NO. 209 OF 230

C:\Users\JAS\DC\ACCDocs\Quiddity\0A651-0021-02 _ WILBARGER WWTP EXP. 1.5 MGD\Project Files\PLANS\ELEC-A14.dwg, Jul 01, 2026 - 1:05pm, JAS

0 1 2 3 4 5 ORIGINAL SCALE IN INCHES FOR REDUCED PLANS

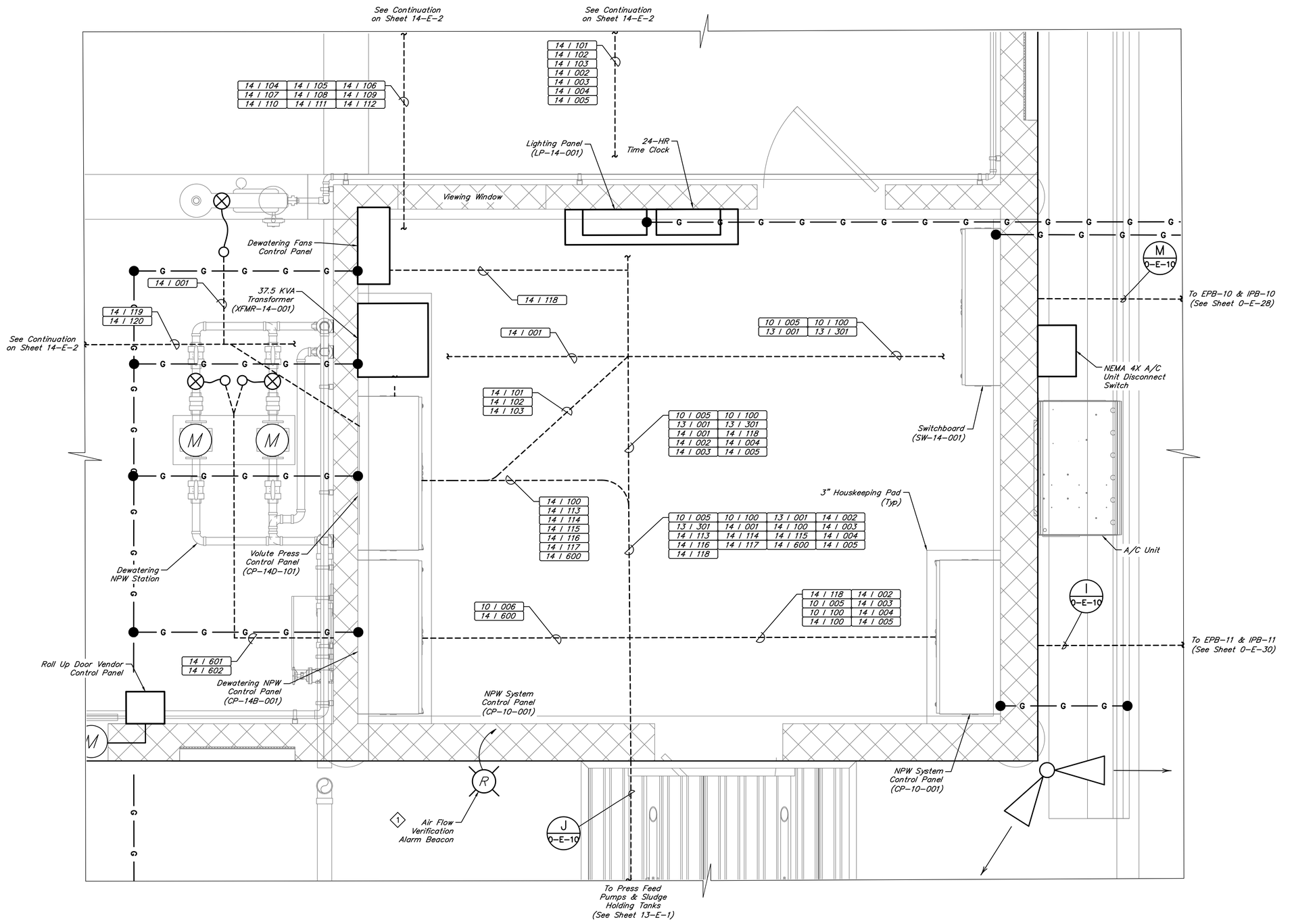

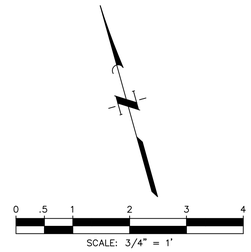

GENERAL NOTES:

1. Not all conduits and wireways are shown for clarity. Refer to schedules, one-line diagram, and control schematics for conduit, wire size and quantity requirements.
2. All above ground conduit in Dewatering Area shall be PVC coated rigid galvanized steel (RGS).

ITEMS OF WORK	
No.	DESCRIPTION
1	Provide and install red beacon light 12 feet above finished grade with s.s. hardware. Field route 1" conduit with 2-#14 and #12 G from the alarm beacon to the PLC within the NPW System Control Panel.

NO.	DATE	REVISIONS	APP.

WILBARGER CREEK M.U.D. No. 2
TRAVIS COUNTY, TEXAS

WASTEWATER TREATMENT PLANT EXPANSION TO 1.5 MGD

DEWATERING BUILDING ELECTRICAL ROOM INSTRUMENTATION PLAN

QUIDDITY
Texas Board of Professional Engineers and Land Surveyors Reg. No. F-23290
912 South Capital of Texas Hwy, Suite 300 • Austin, TX 78746 • 512.441.9493

SCALE:	3/4" = 1'-0"	DGN. BY:	EFLORES
DATE:	JULY 2026	DWN. BY:	JSTRUHAR
JOB NO.	0A651-0021-02	DWG. NO.	
SUBMITTED:		SURV. BY:	
		F.B. NO.	

STATE OF TEXAS
BAO LE THIEN TRAN
149385
LICENSED PROFESSIONAL ENGINEER
07/01/2026

14-E-6
SHEET NO. 210 OF 230

C:\Users\JAS\DC\ACCDocs\Quiddity\0A651-0021-02 _ WILBARGER WWTP EXP. 1.5 MGD\Project Files\PLANS\ELEC-A14.dwg, Jul 01, 2026 - 1:10pm, JAS

ORIGINAL SCALE IN INCHES FOR REDUCED PLANS

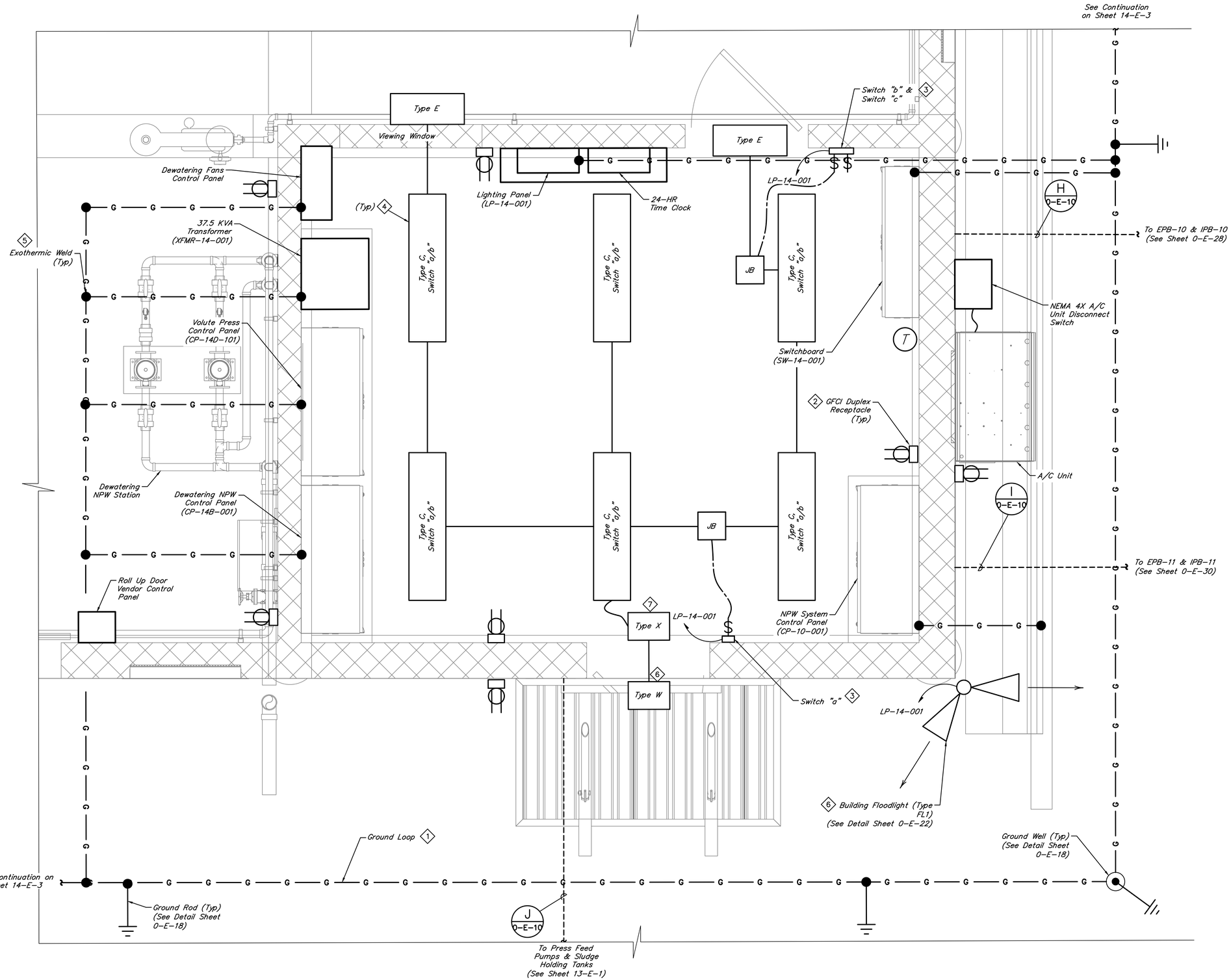

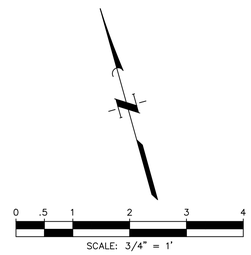

GENERAL NOTES:

1. Not all conduits and wireways are shown for clarity. Refer to schedules, one-line diagram, and control schematics for conduit, wire size and quantity requirements.
2. All above ground conduit in Dewatering Area shall be PVC coated rigid galvanized steel (RGS).
3. See Lighting Fixture Schedule on Sheet 0-E-2.
4. "(#)" indicates Lighting Panel (LP-14-001) circuit number.

ITEMS OF WORK	
No.	DESCRIPTION
1	Ground Loop: Install #4/0 bare copper wire directly buried a minimum of 30" below grade around Electrical Room with 3/4" x 10' Ground Rods with 20' maximum spacing.
2	Receptacles shall be duplex GFCI with While-In-Use cover and shall be installed twenty-four inches (24") above finished floor. Home run all receptacles to LP-14-001.
3	Provide 3-way light switches and install forty-eight inches (48") above finished floor. Light switch "a" & "b" shall control light fixtures inside Electrical Room and light switch "c" & "d" shall control light fixtures in dewatering area.
4	Install Light Fixtures using stainless steel unistrut and hardware a minimum of ten feet (10') from finished floor.
5	All connections for ground loop shall be exothermic connections except those connecting to canopy columns which shall be mechanical connections. Bond all equipment at frame or ground bus.
6	Exterior building wallpacks and floodlights shall be wired to a 24-Hour time clock (adjacent to LP-14-001) for automatic control.
7	All emergency exit fixtures shall be circuited ahead of switches and contactors, and shall be non-switched. Fixtures shall be installed above center of doorway.

NO.	DATE	REVISIONS	APP.

WILBARGER CREEK M.U.D. No. 2
TRAVIS COUNTY, TEXAS

WASTEWATER TREATMENT PLANT
EXPANSION TO 1.5 MGD

DEWATERING BUILDING ELECTRICAL ROOM LIGHTING & GROUNDING PLAN

QUIDDITY
Texas Board of Professional Engineers and Land Surveyors Reg. No. F-23290
912 South Capital of Texas Hwy, Suite 300 • Austin, TX 78746 • 512.441.9493

SCALE:	3/4" = 1'-0"	DGN. BY:	EFLORES
DATE:	JULY 2026	DWN. BY:	JSTRUHAR
JOB NO.	0A651-0021-02	DWG. NO.	
SUBMITTED:		SURV. BY:	
		F.B. NO.	

STATE OF TEXAS
BAO LE THIEN TRAN
149385
LICENSED PROFESSIONAL ENGINEER
07/01/2026

14-E-7
SHEET NO. 211 OF 230

C:\Users\JAS\DC\ACCDocs\Quiddity\0A651-0021-02 _ WILBARGER WWTP EXP. 1.5 MGD\Project Files\PLANS\ELEC-A14.dwg, Jul 01, 2026 - 1:13pm, JAS

0 1 2 3 4 5 ORIGINAL SCALE IN INCHES FOR REDUCED PLANS

SCADA

Lift Station Signals (See I/O List in Specifications)

Lift Station Local Panel (CP-02-001)

- Y — YL 02001A — CP-02-001 Control Power On
- OO — HS 02001A — CP-02-001 Phase Failure Bypass
- OO — HS 02001B — CP-02-001 Controls Primary-Backup
- R — PB 02001E — CP-02-001 Alarm Reset
- OO — HS 02001E — CP-02-001 Pump No. 2 Lift Station - Peak Shaving Basin Selector
- R — YL 02001B — CP-02-001 PLC Fail Alarm
- BK — PB 02001A — CP-02-001 Float Switch Test
- BK — PB 02001C — CP-02-001 Alarm Silence
- OO — HS 02001C — CP-02-001 Alarm Horn On-Off
- OO — HS 02001F — CP-02-001 Pump No. 2/3/4 Lift Station - Peak Shaving Basin Selector
- R — YL 02001C — CP-02-001 Pumps On Float Backup
- R — PB 02001B — CP-02-001 Float Switch Reset
- BK — PB 02001D — CP-02-001 Alarm Test
- OO — HS 02001D — CP-02-001 Alarm Beacon On-Off
- R — YL 02001D — LSL-02-001 Low Level Alarm
- R — YL 02001E — LSH-02-001 High Level Alarm Transducer Fail

Typical of 4

- HOA — HS 02101 — SP-02-101 Hand-Off-Auto
- PB 02101 — SP-02-101 PPM Reset
- G — YL 02101A — SP-02-101 Running
- R — YL 02101B — SP-02-101 Seal Fail
- R — YL 02101C — SP-02-101 Over Temp
- R — YL 02101D — SP-02-101 Overload
- KI 02101 — SP-02-101 Runtime

Typical of 4: SP-02-101 Call; SP-02-101 Running; SP-02-101 Overload

PV-03-005 Call; PV-03-005 Open; PV-03-005 Closed

PV-03-006 Call; PV-03-006 Open; PV-03-006 Closed

R — YL 02001F — CP-02-001 Rotating Beacon

Lift Station PLC Local Panel (CP-02-002)

- CP-02-001 Control Power Fail
- CP-02-001 Phase Fail
- LSH-02-001 High Float (Transducer Fail)
- LS-02-005 Lag 3 Float (Peak Shaving)
- LS-02-004 Lag 2 Float (Common Spare)
- LS-02-003 Lag 1 Float
- LS-02-002 Lead Float
- LS-02-001 Off Float
- LSL-02-001 Low Level
- LSH-04-001 Peak Shaving Basin High Level
- CP-02-001 Pumps On Backup Control
- CP-02-001 PLC Fail (Watchdog)
- CP-02-001 Alarm Reset
- Typical of 4: SP-02-101 in Hand; SP-02-101 in Auto; SP-02-101 Running; SP-02-101 Call to Run; SP-02-101 Overload; SP-02-101 Seal Fail; SP-02-101 Overtemp
- LIT-02-001 Wet Well Level

Typ for 4 (101, 201, 301, 401) SP-02-101 MCC Bucket

Typical of 4: SP-02-101 Call; SP-02-101 Running; SP-02-101 Overload

To Headworks (See Sheet 3-I-1)

10"x8"

8" DI - RS To Peak Shaving Basin (See Sheet 4-I-1)

LSH-04-001 Peak Shaving Basin High Level Alarm

LSL-02-001 (Low Level Float)

LS-02-001 (Off Float)

LS-02-002 (Lead Float)

LS-02-003 (Lag 1 Float) - (Peak Shaving)

LS-02-004 (Lag 2 Float) - (Common Spare)

LS-02-005 (Lag 3 Float)

LSH-02-001 (High Level Float)

SP-02-101 Seal Fail; SP-02-101 Over Temp

SP-02-201 Seal Fail; SP-02-201 Over Temp

SP-02-301 Seal Fail; SP-02-301 Over Temp

SP-02-401 Seal Fail; SP-02-401 Over Temp

120

LIT 02001

LE 02001

From Peak Shaving Basin (See Sheet 4-I-1)

LSH 02001

LSL 02005

LS 02004

LS 02003

LS 02002

LS 02001

LSL 02001

12' LIT STATION WET WELL

12" PVC - DR From Onsite Drain

18" PVC - RS From San Sewer System

24" DI - RS From San Sewer System

2" AVV-02-101; 2" BV-02-101

2" AVV-02-201; 2" BV-02-201

2" AVV-02-301; 2" BV-02-301

2" AVV-02-401; 1" BV-02-401

8" SCV-02-101; 8" PV-02-101

8" SCV-02-201; 8" PV-02-201

8" SCV-02-301; 8" PV-02-301

8" SCV-02-401; 8" PV-02-401

10" PV-02-003

10" PV-02-002

10" PV-02-001

2" ARV-02-001

2" BV-02-001

1" BV-02-002

PI 02001

1" DS-02-001

10"x12"

12" DI - RS To Headworks (See Sheet 3-I-1)

2" PVC - DR; 8" DI - RS

MS TS — M — P — 6"x8"

SP-02-101 25 HP

SP-02-201 25 HP

SP-02-301 25 HP

SP-02-401 25 HP

For Electrical and Instrumentation Only:

STATE OF TEXAS — JOEL J. JOHN — 116778 — LICENSED PROFESSIONAL ENGINEER — 03/10/2026

NO.	DATE	REVISIONS	APP.

WILBARGER CREEK M.U.D. No. 2
TRAVIS COUNTY, TEXAS

WASTEWATER TREATMENT PLANT EXPANSION TO 1.5 MGD

LIFT STATION P&ID

QUIDDITY
Texas Board of Professional Engineers and Land Surveyors Reg. No. F-23290
912 South Capital of Texas Hwy, Suite 300 • Austin, TX 78746 • 512.441.9493

SCALE:	NONE	DGN. BY:	ZAC
DATE:	FEBRUARY 2026	DWN. BY:	SSOMERS
JOB NO.	0A651-0021-02	DWG. NO.	
SUBMITTED:		SURV. BY:	
		F.B. NO.	

STATE OF TEXAS — ZACHARY A. COOPER — 156249 — LICENSED PROFESSIONAL ENGINEER — 3/10/26

2-I-1
SHEET NO. 212 OF 230

C:\Users\cgular\AppData\Local\Autodesk\AutoCAD Plant 3D\CollaborationCache\0A651-0011-00 P&ID's\PID DWG\LIFT STA.dwg, Feb 19, 2026 - 5:35am, cgular

0 1 2 3 4 5 ORIGINAL SCALE IN INCHES FOR REDUCED PLANS

SCADA Panel

See I/O List

Headworks Control Panel (CP-03-001)

On/Off HS 03001A CP-03-001 Control Panel Power	W YL 03001D CP-03-001 Control Power On	H-O-A HS 03101A MFS-03-101 Hand-Off-Auto	H-O-A HS 03001D VMP-03-001 Hand-Off-Auto
R YL 03101A MFS-03-101 Screen Running	Y YL 03101C MFS-03-101 Screen Fault	H-O-A HS 03001B WC-03-001 Hand-Off-Auto	H-O-A HS 03101B MFS-03-101 Screen Spray Hand-Off-Auto
R YL 03101B MFS-03-101 Brush Running	Y YL 03101D MFS-03-101 Brush Fault	H-O-A HS 03001C WC-03-001 Fwd-Off-Rev	H-O-A HS 03001E WC-03-001 Comp Spray Hand-Off Auto
R YL 03001A WC-03-001 Running	Y YL 03001E WC-03-001 Compactor Fault	PB 03101B MFS-03-101 System Reset	
R YL 03001B VMP-03-001 Running	Y YL 03001F VMP-03-001 Booster Pump Fault		
Y YL 03101C MFS-03-101 High Level	PB 03101A MFS-03-101 Emergency Stop		

Secondary Headworks Control Panel (CP-03-002)

H-O-A HS 03001A VMP-03-001 Hand-Off-Auto	H-O-A HS 03301B MFS-03-301 Hand-Off-Auto	W YL 03002 CP-03-002 Control Power On	On-Off HS 03002 CP-03-002 Control Panel Power
H-O-A HS 03301A MFS-03-301 Screen Spray Hand-Off-Auto	H-O-A HS 03001C WC-03-001 Hand-Off-Auto	Y YL 03301A MFS-03-301 Screen Fault	R YL 03301C MFS-03-301 Screen Running
H-O-A HS 03001B WC-03-001 Comp Spray Hand-Off-Auto	F-O-R HS 03001D WC-03-001 Fwd-Off-Rev	Y YL 03301B MFS-03-301 Brush Fault	R YL 03301D MFS-03-301 Brush Running
	PB 03301A MFS-03-301 System Reset	Y YL 03001A WC-03-001 Compactor Fault	R YL 03001C WC-03-001 Compactor Running
		Y YL 03001B VMP-03-001 Booster Pump Fault	R YL 03001D VMP-03-001 Booster Pump Running
		PB 03301B MFS-03-301 Emergency Stop	

4" PVC – NPW
From NPW System
4"x3" 3" BV-03-001
3" PVC – NPW
3"x1 1/4"
P VMP-03-001
M
PI 03001
1/2" BV-03-002
1 1/4"x2"
2" PRV-03-001
2" BCV-03-001
2" BV-03-003
2" PVC – NPW
3"x2"
2" BV-03-004
2" DI – NPW
2" PVC – NPW
2" PVC – NPW
To Peak Shaving Basin 1

LSH-03-001 Headworks Level High
SV-03-101 Open/Close
MFS-03-101 Upstream/Downstream Level
WC-03-001 Call
WC-03-001 Running
VMP-03-001 Call
VMP-03-001 Running
LSH-03-301 Headworks Level High
LSH-03-001 Headworks Level High
LSH-03-301 Headworks Level High
MFS-03-302 Upstream/Downstream Level
LSH-03-001 Headworks Level High
LSH-03-301 Headworks Level High
SV-03-301 Open/Close
WC-03-001 E-STOP
SV-03-302 Open/Close
MFS-03-301 E-STOP
LSH-03-301 Headworks Level High

HS 03101 MFS-03-101 Hand-Off-Auto
HS 03301 MFS-03-301 Hand-Off-Auto
HS 03001A WC-03-001 Hand-Off-Auto
HS 03001B WC-03-001 Fwd-Off-Rev
PB 03301 E-Stop

2" PVC – NPW
LIT 03301
LE 03102
LE 03302
LIT 03101
Dumpster Pad
Discharge Chute
6" PVC – DR
LSH 03001
LE 03101
ULT
PB 03101 E-STOP
5/8" HB-03-001
MFS-03-101
PG-03-101
PG-03-102
2" BV-03-101
2" SV-03-101
2" BV-03-102
2" BV-03-103
RCTW-03-001
12" DI – SI
12" DI – SI
To Rapid Mix Basin No. 1
2" BV-03-104
2" SV-03-102
2" BV-03-105
2" BV-03-106
MS-03-301 (Relocated)
PG-03-301 (Relocated)
PG-03-202
LE 03301
ULT
ULT
12"x10"
10" DI – SI
10" DI – SI
To Rapid Mix Basin No. 2
(See Sheet 5-I-1)
RCTW-03-002
2" BV-03-301
2" SV-03-302
2" BV-03-302
2" BV-03-303
MFS-03-301
PG-03-201 (Relocated)
PG-03-302
PB 03001 E-STOP
LSH 03301
PB 03301 E-STOP
6" PV-03-001
6" PV-03-002
6" PV-03-003
6" PV-03-004
12" DI – RS
To Peak Shaving Basin
(See Sheet 4-I-1)
6" PVC – DR
To Onsite Drain Manhole No. 1

BF-03-001 12"
480
12" DI – RS
From Onsite Lift Station
(See Sheet 2-I-1)
12" KGV-03-001
12"x18" PV-03-006 12"
480
12" PV-03-005
6"x12"
6" DI – RS
From Peak Shaving Basin
(See Sheet 4-I-1)
From Onsite Lift Station
(See Sheet 2-I-1)

For Electrical and Instrumentation Only:
STATE OF TEXAS JOEL J. JOHN 116776 LICENSED PROFESSIONAL ENGINEER
03/10/2026

NO.	DATE	REVISIONS	APP.

WILBARGER CREEK M.U.D. No. 2
TRAVIS COUNTY, TEXAS

WASTEWATER TREATMENT PLANT EXPANSION TO 1.5 MGD

ELEVATED HEADWORKS P&ID

QUIDDITY
Texas Board of Professional Engineers and Land Surveyors Reg. No. F-23290
912 South Capital of Texas Hwy, Suite 300 • Austin, TX 78746 • 512.441.9493

SCALE: NONE DGN. BY: JZYLBERBERG
DATE: FEBRUARY 2026 DWN. BY: SSOMERS
JOB NO. 0A651-0021-02 DWG. NO.
SUBMITTED: SURV. BY:
F.B. NO.

STATE OF TEXAS JORDAN ZYLBERBERG 142350 LICENSED PROFESSIONAL ENGINEER
3/10/26

3-I-1
SHEET NO. 213 OF 230

C:\Users\cgular\AppData\Local\Autodesk\AutoCAD Plant 3D\CollaborationCache\0A651-0011-00 P&ID's\PID DWG\HDWKS.dwg, Feb 19, 2026 – 5:35am, cgular

0 1 2 3 4 5 ORIGINAL SCALE IN INCHES FOR REDUCED PLANS

SCADA

Lift Station Singles (See I/O List in Specifications)

ML 04001 Photocell

Peak Shaving Basin Control Panel (CP-04-001)

Y YL 04001A CP-04-001 Control Power On	R YL 04001B CP-04-001 PLC Fail Alarm	R YL 04001D LSL-04-001 Low Level	R YL 04001E LSH-04-001 High Level	KI 04101 SPP-04-101 Runtime	KI 04201 SPP-04-201 Runtime	KI 04301 SPP-04-301 Runtime
OO HS 04001A CP-04-001 Phase Failure Bypass	BK PB 04001A CP-04-001 Backup System Test	R YL 04001C CP-04-001 Pumps On Photo Backup	OO HS 04001D CP-04-001 Alarm Beacon On-Off	HOA HS 04101 SPP-04-101 Hand-Off-Auto	HOA HS 04201 SPP-04-201 Hand-Off-Auto	HOA HS 04301 SPP-04-301 Hand-Off-Auto
OO HS 04001B CP-04-001 Controls Primary-Backup	BK PB 04001C CP-04-001 Alarm Silence	BK PB 04001D CP-04-001 Alarm Test	R PB 04001E CP-04-001 Alarm Reset	G YL 04101 SPP-04-101 Running	G YL 04201 SPP-04-201 Running	G YL 04301 SPP-04-301 Running
				R YL 04101 SPP-04-101 Overload	R YL 04201 SPP-04-201 Overload	R YL 04301 SPP-04-301 Overload

R YL 04001F CP-04-001 Rotating Beacon

LSH-04-001 HIGH LEVEL

To Lift Station (See Sheet 2-1-1)

4" GS - AIR

6"x4"

6" GS - AIR

12" DI - RS
From Onsite Lift Station
(See Sheet 2-1-1)

8" DI - RS
From Onsite Lift Station
(See Sheet 2-1-1)

6" BFV-04-002

10"x6"

10" GS - AIR

PI 04002 1/2" BV-04-003

PI 04001 1/2" BV-04-002

DI GS

10" DI - AIR
From Blowers
(See Sheet 9-1-1)

10" BFV-04-001

5/8" HB-04-001

LSH 04001

LSL 04001

2"x1"

2" PVC - NPW
From Headworks
(See Sheet 3-1-1)

2" PVC - NPW

6" PV-04-002

6" PVC - DR

6" PVC - DR To Onsite Drain Manhole No. 1

4" PV-04-003

4" DI - RS

8" DI - RS

120 SHTR

M

6" PV-04-301

P SPP-04-301 7.5 HP

6" SCV-04-301

6" PV-04-302

6" PV-04-101

SPP-04-101 7.5 HP

6" SCV-04-101

6" PV-04-102

6" PV-04-201

SPP-04-201 7.5 HP

6" SCV-04-201

6" PV-04-202

PI 04001

2" ARV-04-001

1/2" BV-04-001

2" PVC - DR

2" BV-04-002

6" DPS-04-001

6" DI - RS To Headworks (See Sheet 3-1-1)

5/8" HB-04-002

6" PV-04-001

6" PVC - DR

6" PVC - DR To Onsite Drain Manhole No. 1

NOTES:

1. Aeration equipment is shown for illustrative purposes only. See specifications for performance requirements. Number of diffusers and pipe size shall be per approved equipment submittals.

NO.	DATE	REVISIONS	APP.

WILBARGER CREEK M.U.D. No. 2
TRAVIS COUNTY, TEXAS

WASTEWATER TREATMENT PLANT EXPANSION TO 1.5 MGD

PEAK SHAVING BASIN P&ID

QUIDDITY
Texas Board of Professional Engineers and Land Surveyors Reg. No. F-23290
912 South Capital of Texas Hwy, Suite 300 • Austin, TX 78746 • 512.441.9493

SCALE:	NONE	DGN. BY:	JZ
DATE:	FEBRUARY 2026	DWN. BY:	SSOMERS
JOB NO.	0A651-0021-02	DWG. NO.	
SUBMITTED:		SURV. BY:	
		F.B. NO.	

For Electrical and Instrumentation Only:

STATE OF TEXAS
JOEL J. JOHN
116776
LICENSED PROFESSIONAL ENGINEER
03/10/2026

STATE OF TEXAS
JORDAN ZYLBERBERG
142350
LICENSED PROFESSIONAL ENGINEER
3/10/26

4-1-1
SHEET NO. 214 OF 230

C:\Users\cgular\AppData\Local\Autodesk\AutoCAD Plant 3D\CollaborationCache\0A651-0011-00 P&ID's\PID DWG\EQ BASIN.dwg, Feb 19, 2026 - 5:36am, cgular

0 1 2 3 4 5 ORIGINAL SCALE IN INCHES FOR REDUCED PLANS

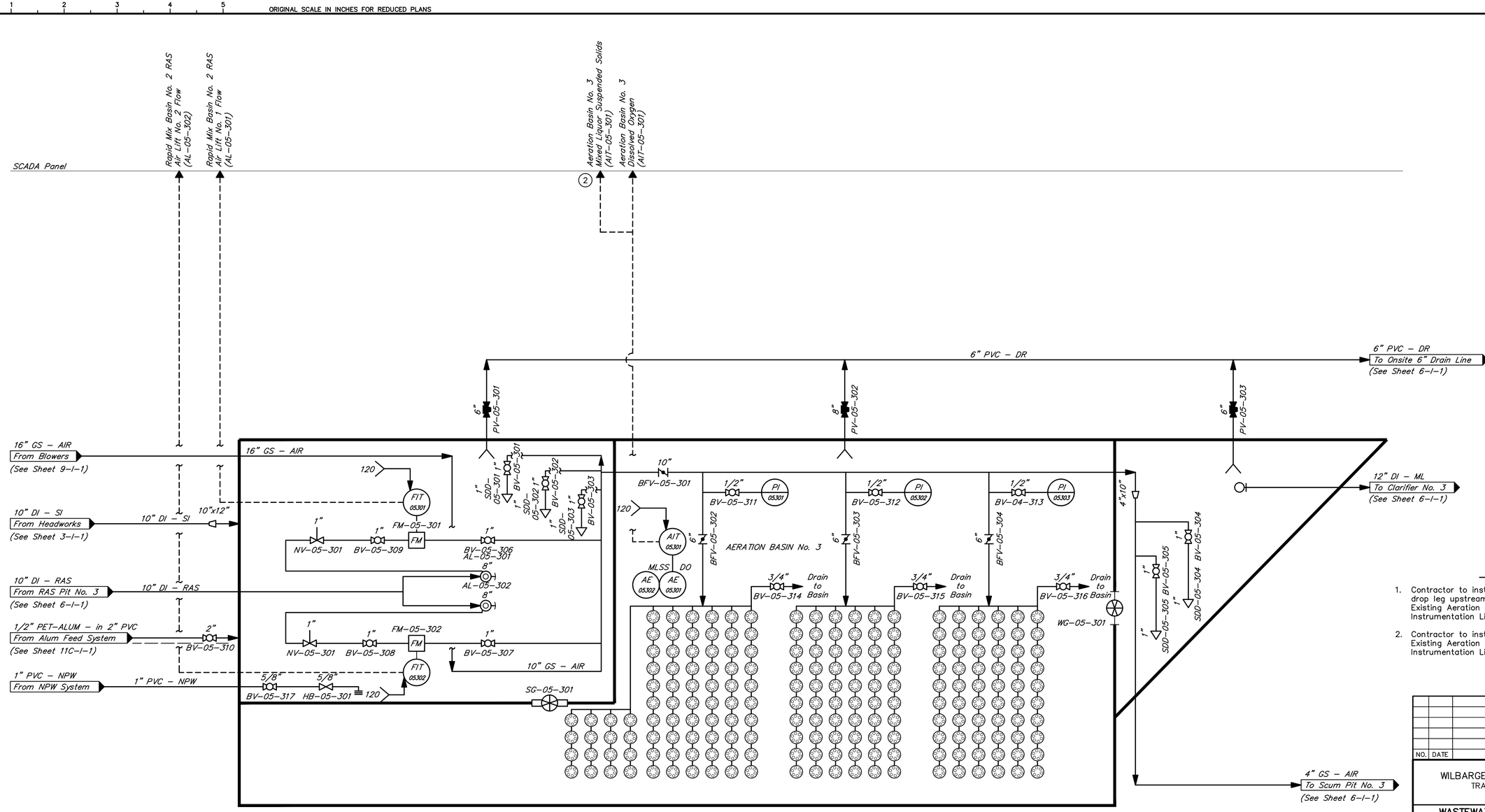

NOTES:

1. Contractor to install pressure indicators on each drop leg upstream of the butterfly valves in Existing Aeration Basin Nos. 1 & 2. Refer to Instrumentation List for additional information.
2. Contractor to install MLSS and DO probes in Existing Aeration Basin Nos. 1 & 2. Refer to Instrumentation List for additional information.

NO.	DATE	REVISIONS	APP.

WILBARGER CREEK M.U.D. No. 2
TRAVIS COUNTY, TEXAS

WASTEWATER TREATMENT PLANT EXPANSION TO 1.5 MGD

AERATION BASIN No. 3 P&ID

QUIDDITY
Texas Board of Professional Engineers and Land Surveyors Reg. No. F-23290
912 South Capital of Texas Hwy, Suite 300 • Austin, TX 78746 • 512.441.9493

SCALE:	NONE	DGN. BY:	JZYLBERBERG
DATE:	FEBRUARY 2026	DWN. BY:	SSOMERS
JOB NO.	0A651-0021-02	DWG. NO.	
SUBMITTED:		SURV. BY:	
		F.B. NO.	

For Electrical and Instrumentation Only:

STATE OF TEXAS
JOEL J. JOHN
116778
LICENSED PROFESSIONAL ENGINEER
03/10/2026

STATE OF TEXAS
JORDAN ZYLBERBERG
142350
LICENSED PROFESSIONAL ENGINEER
3/10/26

5-I-1
SHEET NO. 215 OF 230

C:\Users\cgular\AppData\Local\Autodesk\AutoCAD Plant 3D\CollaborationCache\0A651-0011-00 P&ID's\PID DWG\AER BASINS.dwg, Feb 19, 2026 - 5:37am, cgular

0 1 2 3 4 5 ORIGINAL SCALE IN INCHES FOR REDUCED PLANS

SCADA Panel

CP-06-301 Power
CP-06-301 Running
CP-06-301 Torque Alarm
CP-06-301 Torque Shutdown
CP-06-301 Shear Pin Fail Shutdown
CP-06-301 Overload

Clarifier No. 3 Control Panel
(CP-06-301)

- A YL 06300 — Control Panel On
- 00 HS 06300 — Phase Failure By-Pass
- R YL 06301 — SC-06-301 Shear Pin Fail Shutdown
- 00 HS 06301 — SC-06-301 On/Off
- R YL 06301 — SC-06-301 Torque Alarm
- PB 06300 — Alarm Reset
- G YL 06301 — SC-06-301 Running
- R YL 06301 — SC-06-301 Torque Shutdown
- KI 06301 — SC-06-301 Run Time
- PB 06301 — SC-06-301 Torque Reset
- PB 06301 — SC-06-301 Overload Reset

R YL 06001 — Rotating Beacon

SC-06-301 Shear Pin Fail Shutdown
SC-06-301 High Torque Shutdown

4" PVC – NPW
From NPW System
4"x1 1/2"
1 1/2" PVC – NPW

4" GS – AIR
From Blowers
(See Sheet 9-I-1) BFV-06-301
4"
4" GS – AIR

1" BV-06-301
1" BV-06-302
1" BV-06-303
1" BV-06-304
1" BV-06-306
1" BV-06-305

5/8" BV-06-307
5/8" HB-06-301

TQS
TQS
M SC-06-301

6" AL-06-301

Scum Trough

Drop Box

RAS PIT No. 3
WAS PIT No. 3
SCUM PIT No. 3
CLARIFIER No. 3 BASIN
CLARIFIER EFFLUENT BASIN No. 3

SDD-06-304
SDD-06-305
SDD-06-301
SDD-06-302
SDD-06-303

6" PV-06-301
6" PV-06-302
6" PV-06-304
8" PV-06-303

10" DI – RAS
To Rapid Mix Basin No. 2
(See Sheet 5-I-1)

6" PVC – WAS

8" DI – RAS

6" PVC – DR
From Onsite 6" Drain Line

6" PVC – DR

6" PVC – DR
To 6" Drain Line

12" DI – CE
To Tertiary Filters
(See Sheet 7-I-1)

12" DI – ML
From Clarifier Loading Basin No. 3
(See Sheet 5-I-1)

12" DI – ML

6" DI – WAS
To Sludge Holding Tank
(See Sheet 13-I-1)

For Electrical and Instrumentation Only:

STATE OF TEXAS
JOEL J. JOHN
115778
LICENSED PROFESSIONAL ENGINEER
03/10/2026

NO.	DATE	REVISIONS	APP.

WILBARGER CREEK M.U.D. No. 2
TRAVIS COUNTY, TEXAS

WASTEWATER TREATMENT PLANT
EXPANSION TO 1.5 MGD

CLARIFIER No. 3
P&ID

QUIDDITY
Texas Board of Professional Engineers and Land Surveyors Reg. No. F-23290
912 South Capital of Texas Hwy, Suite 300 • Austin, TX 78746 • 512.441.9493

SCALE:	NONE	DGN. BY:	JZ
DATE:	MARCH 2026	DWN. BY:	SSOMERS
JOB NO.	0A651-0021-02	DWG. NO.	
SUBMITTED:		SURV. BY:	
		F.B. NO.	

STATE OF TEXAS
JORDAN ZYLBERBERG
142350
LICENSED PROFESSIONAL ENGINEER
3/10/26

6-I-1
SHEET NO. 216 OF 230

C:\Users\inoldin\AppData\Local\Autodesk\AutoCAD Plant 3D\CollaborationCache\0A651-0011-00 P&ID's\PID DWG\CLARIFIER No. 3.dwg, Mar 10, 2026 – 10:35am, inoldin

0 1 2 3 4 5 ORIGINAL SCALE IN INCHES FOR REDUCED PLANS

SCADA

Filter No. 1 Signals (See I/O List in Specifications)

Filter No. 2 Signals (See I/O List in Specifications)

Local Control Panel (CP-07-101)

HMI TOUCH SCREEEN

OIT-07-101 Operator Interface

HOA HS 07101A DF-07-101 Hand-Off-Auto — G YL 07101A DF-07-101 Running

HOA HS 07101B SPP-07-101 Hand-Off-Auto — G YL 07101B SPP-07-101 Running

HOA HS 07101C SPP-07-102 Hand-Off-Auto — G YL 07101C SPP-07-102 Running

Typical of 10

BV-07-120 Open/Close

BV-07-120 Open Status

BV-07-120 Closed Status

LSH-07-101 Basin No. 1 High Level Alarm

LE-07-101 Basin No. 1 Level

PIT-07-101 Basin No. 1 BW Pump No. 1 Suction Vacuum Pressure

PIT-07-102 Basin No. 1 BW Pump No. 1 Discharge Vacuum Pressure

PIT-07-103 Basin No. 1 BW Pump No. 2 Suction Vacuum Pressure

PIT-07-104 Basin No. 1 BW Pump No. 1 Discharge Vacuum Pressure

FIT-07-101 Basin No. 1 Backwash System Flow

AIT-07-101 Basin No. 1 Turbidimeter

PSH-07-101 Basin No. 1 Turbidimeter Pump High Discharge Pressure Alarm

Local Control Panel (CP-07-201)

HMI TOUCH SCREEEN

OIT-07-201 Operator Interface

HOA HS 07201A DF-07-201 Hand-Off-Auto — G YL 07201A DF-07-201 Running

HOA HS 07201B SPP-07-201 Hand-Off-Auto — G YL 07201B SPP-07-201 Running

HOA HS 07201C SPP-07-202 Hand-Off-Auto — G YL 07201C SPP-07-202 Running

Typical of 10

BV-07-220 Open/Close

BV-07-220 Open Status

BV-07-220 Closed Status

LSH-07-201 Basin No. 2 High Level Alarm

LE-07-201 Basin No. 2 Level

PIT-07-201 Basin No. 2 BW Pump No. 2 Suction Vacuum Pressure

PIT-07-202 Basin No. 2 BW Pump No. 2 Discharge Vacuum Pressure

PIT-07-203 Basin No. 2 BW Pump No. 2 Suction Vacuum Pressure

PIT-07-204 Basin No. 2 BW Pump No. 2 Discharge Vacuum Pressure

FIT-07-201 Basin No. 2 Backwash System Flow

AIT-07-201 Basin No. 2 Turbidimeter

PSH-07-201 Basin No. 2 Turbidimeter Pump High Discharge Pressure Alarm

3" DI – BW

PIT 07102 — DS-07-102 — BV-07-113 — BV-07-108

SPP-07-101 3 HP — SCV-07-101 — BV-07-107

SPP-07-102 3 HP — SCV-07-102 — BV-07-110 — BV-07-111 — FM-07-101 — 3" DI – BW To On Site Drain Line

PIT 07104 — DS-07-104 — BV-07-115

FIT 07101 — 120

PIT 07101 — DS-07-101 — BV-07-112 — BV-07-106

PIT 07103 — DS-07-103 — BV-07-114 — BV-07-109

BV-07-102

PV-07-101 — 6" PVC – DR — 6" PVC – DR To On Site Drain Line

3"x3" Opening – FTE To Chlorine Contact Basins *(See Sheet 8-1-1)*

LE 07101 — LSH 07101 — SUB — BV-07-101 — BV-07-120 — BV-07-103 — BV-07-104 — BV-07-105

INFLUENT CHANNEL

TERTIARY FILTER BASIN No. 1

TERTIARY FILTER No. 1 DF-07-101

TERTIARY FILTER BASIN No. 2

TERTIARY FILTER No. 2 DF-07-201

BLEACH MIXING CHAMBER

1 1/2" GS – AIR From Blowers — BV-07-001

1/2" PET – SH in 2" PVC From Sodium Hypochlorite Feed System *(See Sheet 11A-1-1)* — BV-07-002

12" DI – CE From Clarifier Effluent Basin No. 1

12" DI – CE From Clarifier Effluent Basin No. 2

12" DI – CE From Clarifier Effluent Basin No. 3 *(See Sheet 6-1-1)*

SG-07-101 — RCTW-07-101 — LE 07201 — LSH 07201 — SUB — SG-07-201 — RCTW-07-201 — SDD-07-001

PSP-07-101 — RCTW-07-103 — RCTW-07-102

PSP-07-201 — RCTW-07-203 — RCTW-07-202

PSH 07101 — PI 07101 — AIT 07101 — AE 07101 — Turbidimeter — BV-07-119 — NDV-07-101 — 1/4" PVC – SH — BV-07-116

PSH 07201 — PI 07201 — AIT 07201 — AE 07201 — Turbidimeter — BV-07-219 — NDV-07-201 — 1/4" PVC – SH — BV-07-216

BV-07-201 — BV-07-202 — BV-07-203 — BV-07-204 — BV-07-205

PIT 07201 — DS-07-201 — BV-07-212 — BV-07-206

PIT 07202 — DS-07-202 — BV-07-213 — SCV-07-201 — BV-07-207 — BV-07-208

PIT 07203 — DS-07-203 — BV-07-214 — BV-07-209

PIT 07204 — DS-07-204 — BV-07-215 — SCV-07-202 — BV-07-210

SPP-07-201 3 HP — SPP-07-202 3 HP

3" DI – BW

FIT 07201 — MAG — FM-07-201 — BV-07-211 — 3" DI – BW To On Site Drain Line

PV-07-201 — 6" PVC – DR — 6" PVC – DR To On Site Drain Line

For Electrical and Instrumentation Only:

STATE OF TEXAS — JOEL J. JOHN — 116778 — LICENSED PROFESSIONAL ENGINEER — 03/10/2026

STATE OF TEXAS — ZACHARY A. COOPER — 156249 — LICENSED PROFESSIONAL ENGINEER — 3/10/26

NO.	DATE	REVISIONS	APP.

WILBARGER CREEK M.U.D. No. 2
TRAVIS COUNTY, TEXAS

WASTEWATER TREATMENT PLANT EXPANSION TO 1.5 MGD

TERTIARY FILTERS P&ID

QUIDDITY
Texas Board of Professional Engineers and Land Surveyors Reg. No. F-23290
912 South Capital of Texas Hwy, Suite 300 • Austin, TX 78746 • 512.441.9493

SCALE:	NONE	DGN. BY:	ZAC
DATE:	FEBRUARY 2026	DWN. BY:	SSOMERS
JOB NO.	0A651-0021-02	DWG. NO.	
SUBMITTED:		SURV. BY:	
		F.B. NO.	

7-1-1
SHEET NO. 217 OF 230

C:\Users\cgular\AppData\Local\Autodesk\AutoCAD Plant 3D\CollaborationCache\0A651-0011-00 P&ID's\PID DWG\TERTIARY FILTERS P&ID.dwg, Feb 18, 2026 – 6:49pm, cgular

0 1 2 3 4 5 ORIGINAL SCALE IN INCHES FOR REDUCED PLANS

SCADA Panel

CP-08-101 Power
SM-08-101 Running
SM-08-101 Overload Alarm
SM-08-101 in Hand
SM-08-101 in Auto
SM-08-102 Running
SM-08-102 Overload Alarm
SM-08-102 in Hand
SM-08-102 in Auto
CP-08-201 Power
SM-08-201 Running
SM-08-201 Overload Alarm
SM-08-201 in Hand
SM-08-201 in Auto
SM-08-202 Running
SM-08-202 Overload Alarm
SM-08-202 in Hand
SM-08-202 in Auto
Auto Sampler General Fail Alarm

Sodium Hypochlorite Mixer Control Panel (CP-08-101)

- W YL 08100 Control Power
- HS 08100 PFP By-Pass Switch
- 00 HS 08101 SM-08-101 Hand-Off-Auto
- G YL 08101A SM-08-101 Running
- KI 08101 SM-08-101 Run Time
- R YL 08101B SM-08-101 Overload Alarm
- R YL 08102C SM-08-101 Seal Fail
- 00 HS 08102 SM-08-102 Hand-Off-Auto
- G YL 08102A SM-08-102 Running
- KI 08102 SM-08-102 Run Time
- R YL 08102B SM-08-102 Overload Alarm
- R YL 08102C SM-08-102 Seal Fail
- MP 08100A Alarm Reset
- MP 08100B Alarm Silence
- MP 08101C SM-08-101 Pump Monitor Reset
- MP 08102C SM-08-102 Pump Monitor Reset

Sodium Bisulfite Mixer Control Panel (CP-08-201)

- W YL 08200 Control Power
- HS 08200 PFP By-Pass Switch
- 00 HS 08201 SM-08-201 Hand-Off-Auto
- G YL 08201A SM-08-201 Running
- KI 08201 SM-08-201 Run Time
- R YL 08201B SM-08-201 Overload Alarm
- R YL 08201C SM-08-201 Seal Fail
- 00 HS 08202 SM-08-202 Hand-Off-Auto
- G YL 08202A SM-08-202 Running
- KI 08202 SM-08-202 Run Time
- R YL 08202B SM-08-202 Overload Alarm
- R YL 08202C SM-08-202 Seal Fail
- MP 08200A Alarm Reset
- MP 08200B Alarm Silence
- MP 08201C SM-08-101 Pump Monitor Reset
- MP 08202C SM-08-102 Pump Monitor Reset

4" PCV – NPW
From Exist NPW System
4"x2"
2" PVC – NPW
5/8" HB-08-001
5/8" HB-08-002

2" PVC – NPW
From NPW System
(See Sheet 10-I-1)

To NPW System
(See Sheet 10-I-1)

6" PVC – DR
To On Site Drain Line

6" DI – NPW
To NPW Pump Station
(See Sheet 10-I-1)

4" DI – AIR
From Blowers
(See Sheet 9-I-1)

6" PV-08-001
6" PV-08-101
6" PV-08-102
6" PV-08-103
6" PV-08-104
6" PV-08-105
DI SS
4" DI – AIR

OFB-08-101
OFB-08-102
OFB-08-103
OFB-08-104

18" PVC – FE
To Outfall

1/2" PET – SH in 2" PVC
From Sodium Hypochlorite Feed System
(See Sheet 11A-I-1)

2" BV-08-001

DISINFECTION BASIN NO. 1

4" SS – AIR

LSL 08001

PF-08-001

FE 08001
ULT

FIT 08001
120
To CP-11C-001
(See Sheet 11C-I-1)

RCTW-08-101

UFB-08-101
UFB-08-102
UFB-08-103

4" BFV-08-101

SG-08-101

3"x3" Opening – FTE
From Tertiary Filters
(See Sheet 7A-I-1)

M SM-08-101
M SM-08-102

SG-08-201

UFB-08-201
UFB-08-202
UFB-08-203

4" BFV-08-201

DISINFECTION BASIN NO. 2

RCTW-08-201

UFB-08-001

DECHLORINATION CHAMBER

FLUME APPROACH CHANNEL

AS-08-001

3/8" PE – FE in 1" PVC

M SM-08-201
M SM-08-202

OFB-08-001

OFB-08-201
OFB-08-202
OFB-08-203
OFB-08-204

6" PV-08-201
6" PV-08-202
6" PV-08-203
6" PV-08-204
6" PV-08-205
2" BV-08-002
6" PV-08-002

6" DI – DR
To On Site Drain Line

1/2" PET – SDS in 2" PVC
To SBS Chemical System
(See Sheet 11A-I-1)

1/2" PET – SDS in 2" PVC

For Electrical and Instrumentation Only:
STATE OF TEXAS
JOEL J. JOHN
116778
LICENSED PROFESSIONAL ENGINEER
03/10/2026

NO.	DATE	REVISIONS	APP.

WILBARGER CREEK M.U.D. No. 2
TRAVIS COUNTY, TEXAS

WASTEWATER TREATMENT PLANT
EXPANSION TO 1.5 MGD

CHLORINE CONTACT BASIN P&ID

QUIDDITY
Texas Board of Professional Engineers and Land Surveyors Reg. No. F-23290
912 South Capital of Texas Hwy, Suite 300 • Austin, TX 78746 • 512.441.9493

SCALE:	NONE	DGN. BY:	ZAC
DATE:	FEBRUARY 2026	DWN. BY:	SSOMERS
JOB NO.	0A651-0021-02	DWG. NO.	
SUBMITTED:		SURV. BY:	
		F.B. NO.	

STATE OF TEXAS
ZACHARY A. COOPER
156249
LICENSED PROFESSIONAL ENGINEER
3/10/26

8-I-1
SHEET NO. 218 OF 230

C:\Users\cgular\AppData\Local\Autodesk\AutoCAD Plant 3D\CollaborationCache\0A651-0011-00 P&ID's\PID DWG\CCB.dwg, Feb 19, 2026 – 5:40am, cgular

ORIGINAL SCALE IN INCHES FOR REDUCED PLANS

SCADA Panel

MSB-09-601 Running
MSB-09-601 SSRV Fail
MSB-09-601 Surge Shutdown
MSB-09-601 Overload Shutdown

Motor Control Center

OO HS 09601 MSB-09-601 Hand-Off-Remote
G YL 09601 MSB-09-601 Running
KL 09601 MSB-09-601 Run Time
R YL 09601 MSB-09-601 Surge Shutdown
R YL 09601 MSB-09-601 Overload Shutdown

SHOWN TYPICAL OF 6 BLOWERS

MSB-09-601 Surge Shutdown
MSB-09-601 Overload Shutdown

MSB-09-601 Local Blower Panel (CP-09-601)

OO HS 09601 MSB-09-601 Run-Stop
MP 09601 MSB-09-601 Protection Module Reset
CFM 09601 MSB-09-601 CFM Display
R YL 09601 MSB-09-601 Surge Shutdown
R YL 09601 MSB-09-601 Overload Shutdown
AM 09601 MSB-09-601 Ammeter

Blower Header Low Pressure No. 1
Blower Header Low Pressure No. 2
Blower Header Low Pressure No. 3

AF-09-101 | PI 09101 | 1/2" BV-09-101 | 10" BFV-09-101 | 10"x8" | 120 SHTR M | B MSB-09-101 75 HP | 8" SAE-09-101 | 8"x10" | PI 09102 | 1/2" BV-09-102 | 10" GS – AIR | 10" DCV-09-101 | 10" BFV-09-102

AF-09-201 | PI 09201 | 1/2" BV-09-201 | 10" BFV-09-201 | 10"x8" | 120 SHTR M | B MSB-09-201 75 HP | 8" SAE-09-201 | 8"x10" | PI 09202 | 1/2" BV-09-202 | 10" GS – AIR | 10" DCV-09-201 | 10" BFV-09-202

AF-09-301 | PI 09301 | 1/2" BV-09-301 | 10" BFV-09-301 | 10"x8" | 120 SHTR M | B MSB-09-301 75 HP | 8" SAE-09-301 | 8"x10" | PI 09302 | 1/2" BV-09-302 | 10" GS – AIR | 10" DCV-09-301 | 10" BFV-09-302

AF-09-401 | PI 09401 | 1/2" BV-09-401 | 10" BFV-09-401 | 10"x8" | 120 SHTR M | B MSB-09-401 75 HP | 8" SAE-09-401 | 8"x10" | PI 09402 | 1/2" BV-09-402 | 10" GS – AIR | 10" DCV-09-401 | 10" BFV-09-402

AF-09-501 | PI 09501 | 1/2" BV-09-501 | 10" BFV-09-501 | 10"x8" | 120 SHTR M | B MSB-09-501 75 HP | 8" SAE-09-501 | 8"x10" | PI 09502 | 1/2" BV-09-502 | 10" GS – AIR | 10" DCV-09-501 | 10" BFV-09-502

AF-09-601 | PI 09601 | 1/2" BV-09-601 | 10" BFV-09-601 | 10"x8" | 120 SHTR M | B MSB-09-601 75 HP | 8" SAE-09-601 | 8"x10" | PI 09602 | 1/2" BV-09-602 | 10" GS – AIR | 10" DCV-09-601 | 10" BFV-09-602

16" BFV-09-001
16" SAE-09-001
16" BFV-09-002
16" SAE-09-002
16" BFV-09-003
16" SAE-09-002
16" BFV-09-004
10"x16"

. . . – Exist_Process
To Peak Shaving Basin
(See Sheet 4-I-1)

16" GS – AIR
To Aeration Basins
(See Sheet 5-I-1)

1/2" BV-09-001 | PSL 09001
1/2" BV-09-002 | PSL 09002
1/2" BV-09-003 | PSL 09003

10" GS – AIR
To Exist Sludge Holding Tank
(See Sheet 13-I-1)

NOTE:

1. New local control panel is for the new blower MSB-09-601 only. Blowers MSB-09-101 through MSB-09-501 shall utilize existing local control panels.

NO.	DATE	REVISIONS	APP.

WILBARGER CREEK M.U.D. No. 2
TRAVIS COUNTY, TEXAS

WASTEWATER TREATMENT PLANT
EXPANSION TO 1.5 MGD

BLOWERS
P&ID

QUIDDITY
Texas Board of Professional Engineers and Land Surveyors Reg. No. F-23290
912 South Capital of Texas Hwy, Suite 300 • Austin, TX 78746 • 512.441.9493

SCALE:	NONE	DGN. BY:	JZ
DATE:	FEBRUARY 2026	DWN. BY:	SSOMERS
JOB NO.	0A651-0021-02	DWG. NO.	
SUBMITTED:		SURV. BY:	
		F.B. NO.	

For Electrical and Instrumentation Only:
STATE OF TEXAS
JOEL J. JOHN
115778
LICENSED PROFESSIONAL ENGINEER
03/10/2026

STATE OF TEXAS
JORDAN ZYLBERBERG
142350
LICENSED PROFESSIONAL ENGINEER
3/10/26

9-I-1
SHEET NO. 219 OF 230

C:\Users\cgular\AppData\Local\Autodesk\AutoCAD Plant 3D\CollaborationCache\0A651-0011-00 P&ID's\PID DWG\AER BLO.dwg, Feb 19, 2026 - 5:38am, cgular

0 1 2 3 4 5 ORIGINAL SCALE IN INCHES FOR REDUCED PLANS

SCADA Panel

NPW System Signals (See IO list in specifications)

NPW Pumps Control Panel (CP-10-001)

- HS 10001A — CP-10-001 Alarm Test Push Button
- BK PB 10001A — CP-10-001 Alarm Reset Push Button
- BK PB 10001B — CP-10-001 Alarm Silence Push Button
- HOA HS 10101 — SPP-10-101 H-O-A
- HOA HS 10201 — SPP-10-201 H-O-A
- R YL 10101B — SPP-10-101 Fail Alarm
- OO HS 10001D — CP-10-001 Phase Failure By-Pass
- OO HS 10001E — CP-10-001 Alarm Horn On-Off
- OO HS 10001F — CP-10-001 Alarm Light On-Off
- KI 10101 — SPP-10-101 Run Time
- KI 10201 — SPP-10-201 Run Time
- R YL 10201B — SPP-10-201 Fail Alarm
- W YL 10001A — CP-10-001 Main Power On
- R YL 10001B — CP-10-001 High System Pressure Alarm
- R YL 10001C — CP-10-001 Low System Pressure Alarm
- G YL 10101A — SPP-10-101 Running
- G YL 10201A — SPP-10-201 Running
- R YL 10001E — CP-10-001 PLC Fail Alarm
- R YL 10101A — SPP-10-101 Fail Alarm
- R YL 10201A — SPP-10-201 Fail Alarm
- SI 10101 — SPP-10-101 Speed Control
- SI 10201 — SPP-10-201 Speed Control

R YL 10001D — CP-10-001 Rotating Beacon

INTERLOCKS:

I1 — NPW System Pumps, SSP-10-101 and SPP-10-201, shall shut off on a low level from the Chlorine Contact Basin

I1 — LSL-08-001 Chlorine Contact Basin Low Level Lockout

PSL-10-001 NPW System Low Pressure

PSL-10-002 NPW System High Pressure Alarm

PIT-10-001 NPW System Pressure

LSL-08-001 Chlorine Contact Basin Low Level Lockout

To NPW Booster Pump (See Sheet 3-I-1)

To Dewatering NPW Pumps (See Sheet 14B-I-1)

From Chlorine Contact Basin (See Sheet 8-I-1)

2" ARV-10-001

1" PVC – NPW

1" PVC – NPW To Chlorine Contact Basin (See Sheet 8-I-1)

6" DI – NPW Suction Line From Chlorine Contact Basins (See Sheet 8-I-1)

4" BS-10-101

4" GV-10-101

4"x3"

3"x4"

SPP-10-101 25 HP

4" SCV-10-101

4" GV-10-102

2" BV-10-001

2" PVC – NPW

2" PVC – NPW To Chlorine Contact Basin (See Sheet 8-I-1)

6" DI – NPW

To Chemical System PLC Panel (See Sheet 11C-I-1)

6" DI – NPW Suction Line From Chlorine Contact Basins (See Sheet 8-I-1)

4" BS-10-201

4" GV-10-201

4"x3"

3"x4"

SPP-10-201 25 HP

4" SCV-10-201

4" GV-10-202

6"x4"

1/2" BV-10-002 DS-10-002 PI 10001

1/2" BV-10-003 DS-10-001 PS 10001 PS 10002 PIT 10001

2" PRV-10-001

120

2" BV-10-004

FIT 10001

FM 10001

4" DI – NPW

4" PVC – NPW To Headworks (See Sheet 3-I-1)

4" PVC – NPW To Aeration Basins

4" PVC – NPW To Aeration Basin No. 3 (See Sheet 5-I-1)

4" PVC – NPW To Clarifiers

4" PVC – NPW To Clarifier No. 3 (See Sheet 6-I-1)

4" PVC – NPW To Chlorine Contact Basins (See Sheet 8-I-1)

4" PVC – NPW To Sludge Holding Tank (See Sheet 13-I-1)

4" PVC – NPW To Chemical Feed System

4" PVC – NPW To Dewatering NPW Booster Pumps (See Sheet 14B-I-1)

For Electrical and Instrumentation Only:

STATE OF TEXAS — JOEL J. JOHN — 115778 — LICENSED PROFESSIONAL ENGINEER — 03/10/2026

NO.	DATE	REVISIONS	APP.

WILBARGER CREEK M.U.D. No. 2
TRAVIS COUNTY, TEXAS

WASTEWATER TREATMENT PLANT EXPANSION TO 1.5 MGD

NPW SYSTEM P&ID

QUIDDITY
Texas Board of Professional Engineers and Land Surveyors Reg. No. F-23290
912 South Capital of Texas Hwy, Suite 300 • Austin, TX 78746 • 512.441.9493

SCALE:	NONE	DGN. BY:	ZAC
DATE:	FEBRUARY 2026	DWN. BY:	SSOMERS
JOB NO.	0A651-0021-02	DWG. NO.	
SUBMITTED:		SURV. BY:	
		F.B. NO.	

STATE OF TEXAS — ZACHARY A. COOPER — 156249 — LICENSED PROFESSIONAL ENGINEER — 3/10/26

10-I-1
SHEET NO. 220 OF 230

C:\Users\cgular\AppData\Local\Autodesk\AutoCAD Plant 3D\CollaborationCache\0A651-0011-00 P&ID's\PID DWG\NPW SYS.dwg, Feb 19, 2026 – 5:41am, cgular

0 1 2 3 4 5 ORIGINAL SCALE IN INCHES FOR REDUCED PLANS

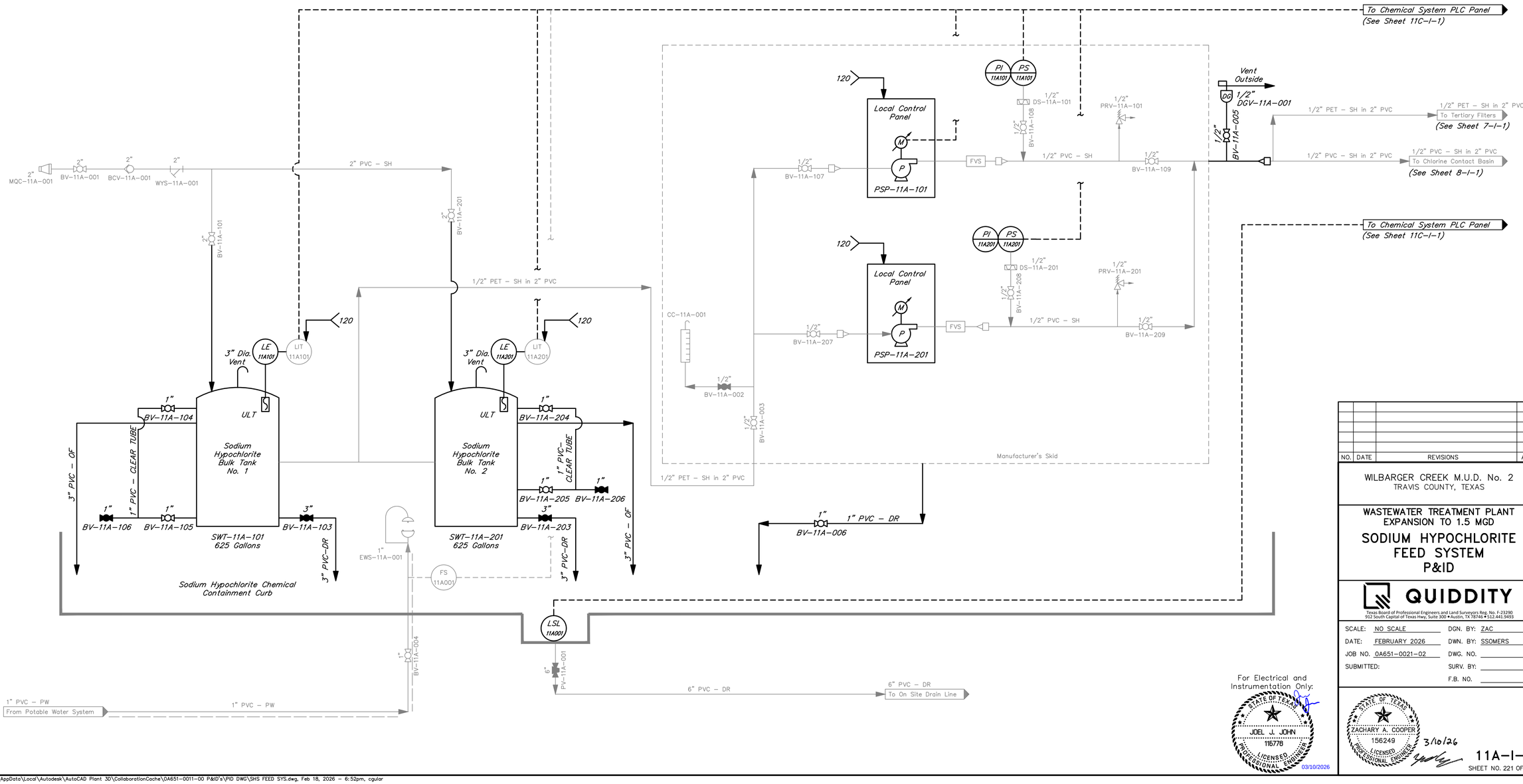

For Electrical and Instrumentation Only:

STATE OF TEXAS
JOEL J. JOHN
116778
LICENSED PROFESSIONAL ENGINEER
03/10/2026

NO.	DATE	REVISIONS	APP.

WILBARGER CREEK M.U.D. No. 2
TRAVIS COUNTY, TEXAS

WASTEWATER TREATMENT PLANT
EXPANSION TO 1.5 MGD

SODIUM HYPOCHLORITE FEED SYSTEM P&ID

QUIDDITY
Texas Board of Professional Engineers and Land Surveyors Reg. No. F-23290
912 South Capital of Texas Hwy, Suite 300 • Austin, TX 78746 • 512.441.9493

SCALE:	NO SCALE	DGN. BY:	ZAC
DATE:	FEBRUARY 2026	DWN. BY:	SSOMERS
JOB NO.	0A651-0021-02	DWG. NO.	
SUBMITTED:		SURV. BY:	
		F.B. NO.	

STATE OF TEXAS
ZACHARY A. COOPER
156249
LICENSED PROFESSIONAL ENGINEER
3/10/26

11A-I-1
SHEET NO. 221 OF 230

C:\Users\cgular\AppData\Local\Autodesk\AutoCAD Plant 3D\CollaborationCache\0A651-0011-00 P&ID's\PID DWG\SHS FEED SYS.dwg, Feb 18, 2026 - 6:52pm, cgular

0 1 2 3 4 5 ORIGINAL SCALE IN INCHES FOR REDUCED PLANS

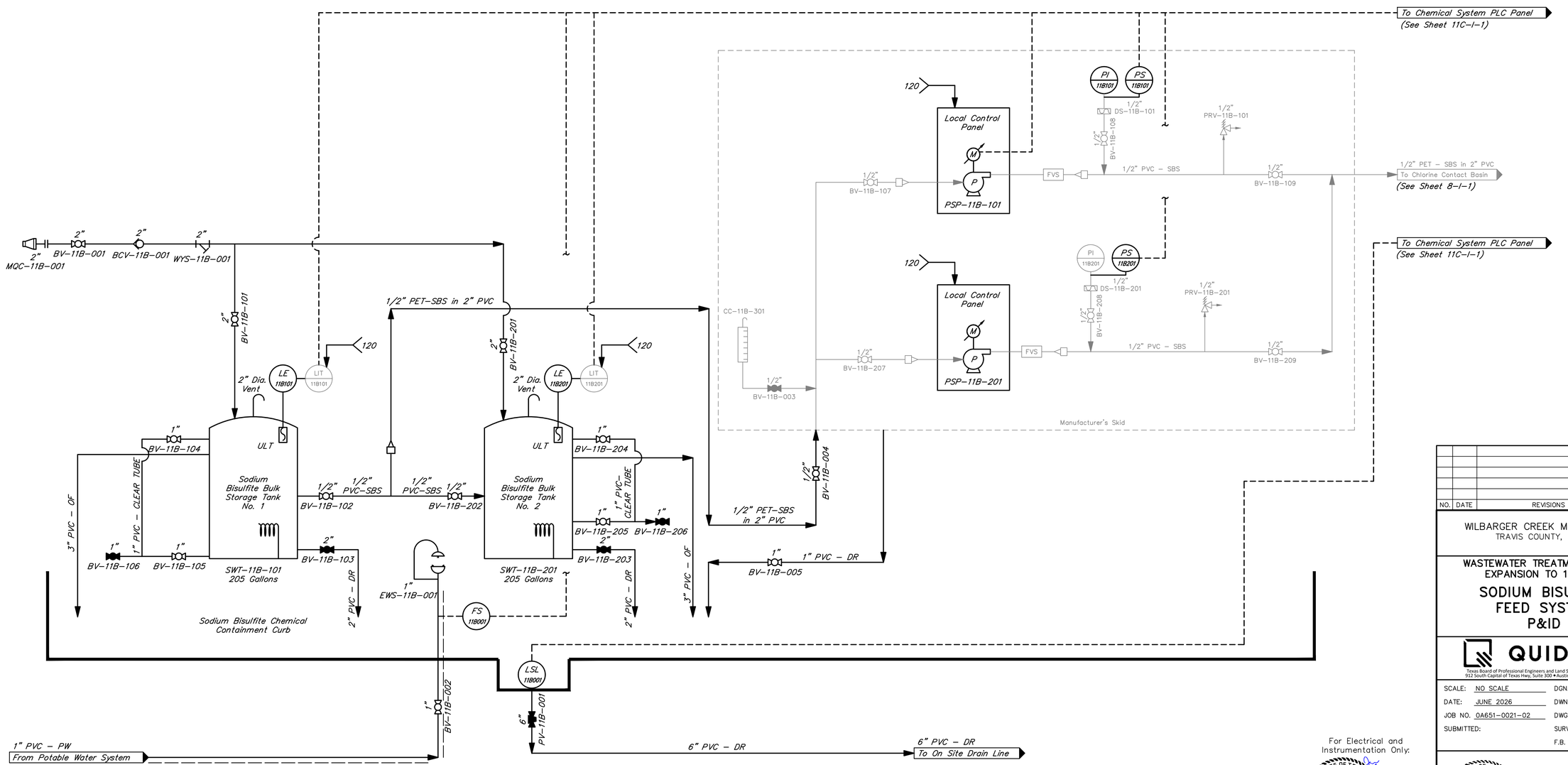

NO.	DATE	REVISIONS	APP.

WILBARGER CREEK M.U.D. No. 2
TRAVIS COUNTY, TEXAS

WASTEWATER TREATMENT PLANT
EXPANSION TO 1.5 MGD

SODIUM BISULFITE FEED SYSTEM P&ID

QUIDDITY
Texas Board of Professional Engineers and Land Surveyors Reg. No. F-23290
912 South Capital of Texas Hwy, Suite 300 • Austin, TX 78746 • 512.441.9493

SCALE:	NO SCALE	DGN. BY:	ZAC
DATE:	JUNE 2026	DWN. BY:	SSOMERS
JOB NO.	0A651-0021-02	DWG. NO.	
SUBMITTED:		SURV. BY:	
		F.B. NO.	

For Electrical and Instrumentation Only:

STATE OF TEXAS
JOEL J. JOHN
115778
LICENSED PROFESSIONAL ENGINEER
07/01/2026

STATE OF TEXAS
ZACHARY A. COOPER
156249
LICENSED PROFESSIONAL ENGINEER
7/1/26

11B-I-1
SHEET NO. 222 OF 230

C:\Users\JAS\AppData\Local\Autodesk\AutoCAD Plant 3D\CollaborationCache\0A651-0011-00 P&ID's\PID DWG\SBS FEED SYS.dwg, Jun 22, 2026 - 1:11pm, JAS

ORIGINAL SCALE IN INCHES FOR REDUCED PLANS

See I/O List for a Complete List of Alarms and Indicators

SCADA

Chemical System PLC Panel (CP-11-001)

Typical of 2 | Typical of 2 | Typical of 2 | Typical of 2 | Typical of 3

FIT-08-001 Plant Effluent Flow
FIT-10-001 NPW Flow
PSP-11A-101 Feedback Rate
PSP-11A-101 Flow Pace Signal
PSP-11A-101 Fail
PSP-11A-101 Start Command
PSP-11A-101 Run Status
PSP-11A-101 Low Pressure
PSP-11A-101 High Pressure
LSL-11A-101 Low Level Alarm
LIT-11A-101 Tank Level Transmitter
LS-11A-001 Leak Detected
FS-11A-001 Emergency Eyewash
PSP-11B-101 Feedback Rate
PSP-11B-101 Flow Pace Signal
PSP-11B-101 Fail
PSP-11B-101 Start Command
PSP-11B-101 Run Status
PSP-11B-101 Low Pressure
PSP-11B-101 High Pressure
LSL-11B-101 Low Level Alarm
LIT-11B-101 Tank Level Transmitter
LS-11B-001 Leak Detected
FS-11B-001 Emergency Eyewash
LSL-11C-101 Low Level Alarm
LIT-11C-101 Tank Level Transmitter
LSL-11C-201 Low Level Alarm
LIT-11C-201 Tank Level Transmitter
LSL-11C-301 Low Level Alarm
LIT-11C-301 Tank Level Transmitter
PSP-11C-301 Feedback Rate
PSP-11C-301 Flow Pace Signal
PSP-11C-301 Fail
PSP-11C-101 Start Command
PSP-11C-301 Run Status
PSP-11C-301 Low Pressure
PSP-11C-301 High Pressure
LS-11C-001 Leak Detected
LS-11C-002 Leak Detected
FS-11C-001 Emergency Eyewash

From Chlorine Contact Basin
(See Sheet 8-I-1)

From NPW System
(See Sheet 10-I-1)

4" PVC - NPW
From NPW System
4"x2"
2" PVC - NPW
2"x5/8"

From Sodium Hypochlorite System
(See Sheet 11A-I-1)

5/8" HB-11C-002
5/8" BV-11C-006

From Sodium Bisulfite System
(See Sheet 11B-I-1)

2" MOC-11C-001
2" BV-11C-007
2" BCV-11C-002
2" WYS-11C-001
2" BV-11C-001
2" BCV-11C-001
2" WYS
2" BV-11C-101
2" BV-11C-201
2" BV-11C-301

CC-11C-101
1/2" BV-11C-004
1/2" PET-ALUM in 2" PVC

120
8" Dia. Vent
LE 11C101
LIT 11C101
ULT
Alum Bulk Storage Tank No. 1
SWT-11C-101 2,500 Gallons
1" BV-11C-104
1" BV-11C-106
1" BV-11C-105
3" PVC - OF
1" PVC - CLEAR TUBE
3" BV-11C-103
3" PVC - DR
1/2" PVC-ALUM
1/2" BV-11C-102
1/2" BV-11C-202

120
8" Dia. Vent
LE 11C201
LIT 11C201
ULT
Alum Bulk Storage Tank No. 2
SWT-11C-201 2,500 Gallons
1" BV-11C-204
1" PVC - CLEAR TUBE
3" PVC - OF
1" BV-11C-205
1" BV-11C-206
3" BV-11C-203
3" PVC - DR

1" EWS-11C-001
FS 11C001
Alum Chemical Containment Curb
1" BV-11C-002
LSL 11C001
LSL 11C002
6" PV-11C-001
6" PV-11C-002
6" PVC - DR

1" PVC - PW
From Potable Water System
1" PVC - PW

120
8" Dia. Vent
LE 11C301
LIT 11C301
ULT
Alum Bulk Storage Tank No. 3
SWT-11C-301 2,500 Gallons
1" BV-11C-304
1" PVC - CLEAR TUBE
3" PVC - OF
1" BV-11C-306
1" BV-11C-305
3" BV-11C-303
3" PVC - DR
1/2" PET-ALUM in 2" PVC
1/2" PVC-ALUM
1/2" BV-11C-302
1" BV-11C-005
1" PVC - DR

120
Local Control Panel
M
P
PSP-11C-101
FVS
PD
PI 11C101
PS 11C101
1/2" DS-11C-101
1/2" BV-11C-108
1/2" PRV-11C-101
1/2" BV-11C-107
1/2" BV-11C-109
1/2" BPV-11C-001
2" BCV-11C-003
. . . Exist_Process
To Rapid Mix Basin No. 1

120
Local Control Panel
M
P
PSP-11C-201
FVS
PD
PI 11C201
PS 11C201
1/2" DS-11C-201
1/2" BV-11C-208
1/2" PRV-11C-201
1/2" BV-11C-207
1/2" BV-11C-209
Manufacturer's Skid

2" BV-11C-007

120
Local Control Panel
M
P
PSP-11C-301
FVS
PI 11C301
PS 11C301
1/2" DS-11-201
1/2" PRV-11C-103
1/2" BV-11C-309
1/2" BV-11C-308
1/2" PVC-SH
1/2" BV-11C-310
2" BCV-11C-004
2" PVC - ALUM in 2" Conduit
To Rapid Mix Basin No. 2
1/2" BV-11C-307
Manufacturer's Skid

For Electrical and Instrumentation Only:

STATE OF TEXAS
JOEL J. JOHN
115776
LICENSED PROFESSIONAL ENGINEER
07/01/2026

NO.	DATE	REVISIONS	APP.

WILBARGER CREEK M.U.D. No. 2
TRAVIS COUNTY, TEXAS

WASTEWATER TREATMENT PLANT EXPANSION TO 1.5 MGD

ALUM FEED SYSTEM P&ID

QUIDDITY
Texas Board of Professional Engineers and Land Surveyors Reg. No. F-23290
912 South Capital of Texas Hwy, Suite 300 • Austin, TX 78746 • 512.441.9493

SCALE: NO SCALE
DATE: JUNE 2026
JOB NO. 0A651-0021-02
SUBMITTED:
DGN. BY: ZAC
DWN. BY: SSOMERS
DWG. NO.
SURV. BY:
F.B. NO.

STATE OF TEXAS
ZACHARY A. COOPER
156249
LICENSED PROFESSIONAL ENGINEER
7/1/26

11C-I-1
SHEET NO. 223 OF 230

C:\Users\JAS\AppData\Local\Autodesk\AutoCAD Plant 3D\CollaborationCache\0A651-0011-00 P&ID's\PID DWG\ALUM FEED SYS.dwg, Jun 22, 2026 - 1:16pm, JAS

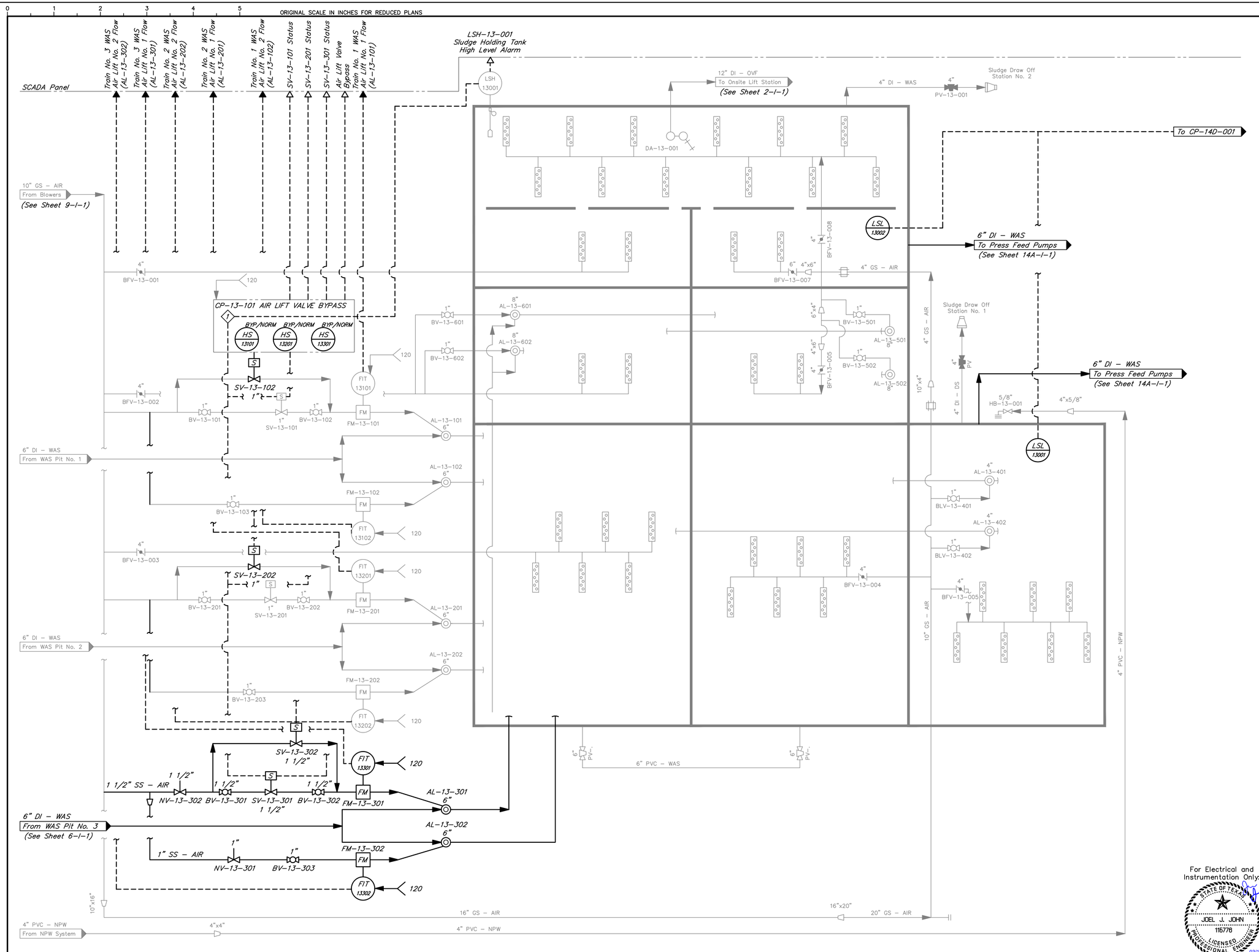

1 Interlock: When the Level Switch High float is activated, solenoid valves will fail closed when the high level timer is achieved.

NO.	DATE	REVISIONS	APP.

WILBARGER CREEK M.U.D. No. 2
TRAVIS COUNTY, TEXAS

WASTEWATER TREATMENT PLANT
EXPANSION TO 1.5 MGD

SLUDGE HOLDING TANK
P&ID

QUIDDITY
Texas Board of Professional Engineers and Land Surveyors Reg. No. F-23290
912 South Capital of Texas Hwy, Suite 300 • Austin, TX 78746 • 512.441.9493

SCALE:	NO SCALE	DGN. BY:	JZ
DATE:	FEBRUARY 2026	DWN. BY:	SSOMERS
JOB NO.	OA651-0021-02	DWG. NO.	
SUBMITTED:		SURV. BY:	
		F.B. NO.	

For Electrical and Instrumentation Only:

STATE OF TEXAS
JOEL J. JOHN
116776
LICENSED PROFESSIONAL ENGINEER
03/10/2026

STATE OF TEXAS
JORDAN ZYLBERBERG
142350
LICENSED PROFESSIONAL ENGINEER
3/10/26

13-I-1
SHEET NO. 224 OF 230

C:\Users\cgular\AppData\Local\Autodesk\AutoCAD Plant 3D\CollaborationCache\OA651-0011-00 P&ID's\PID DWG\AER SLD HLD TNK.dwg, Feb 19, 2026 - 5:43am, cgular

0 1 2 3 4 5 ORIGINAL SCALE IN INCHES FOR REDUCED PLANS

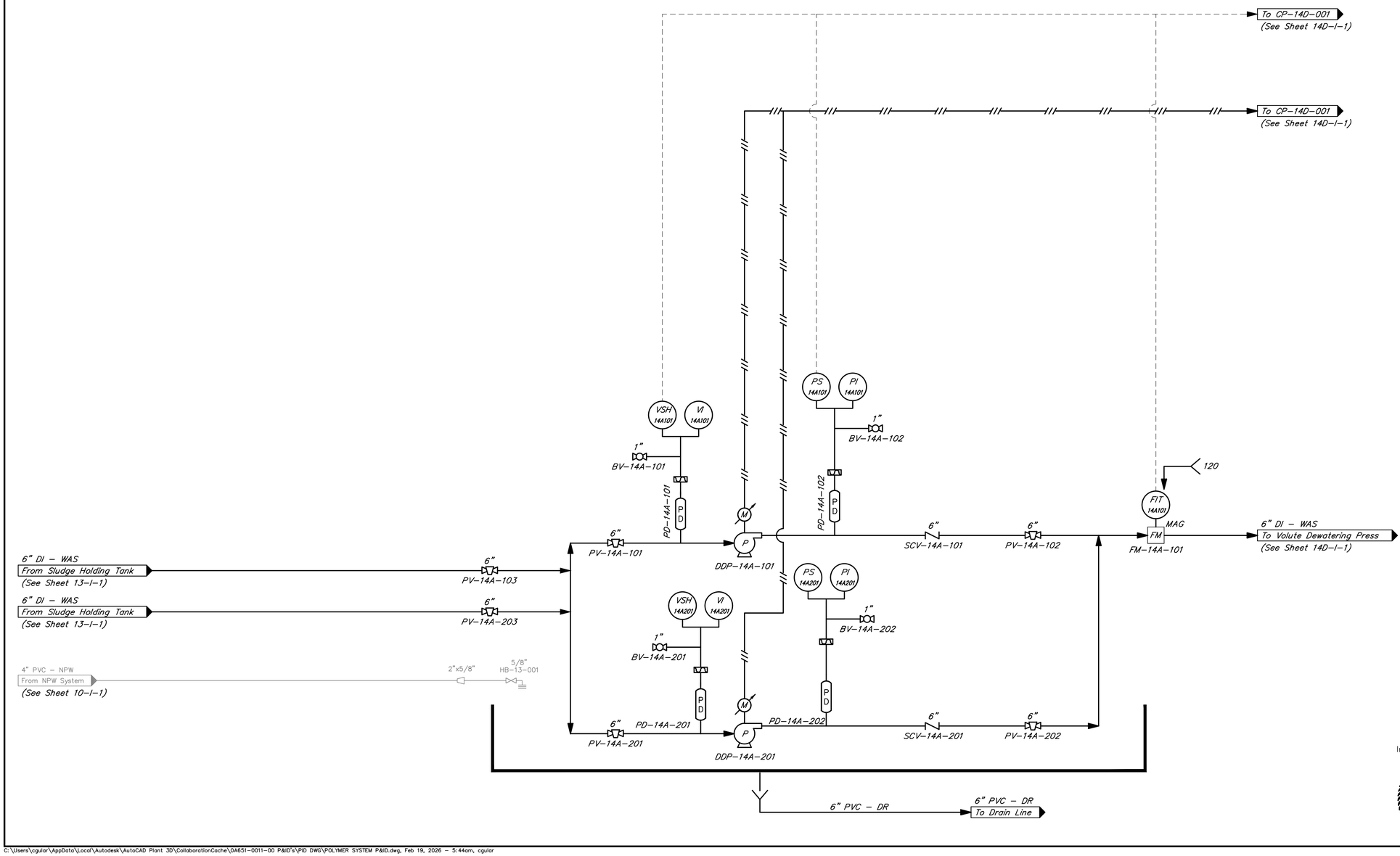

NO.	DATE	REVISIONS	APP.

WILBARGER CREEK M.U.D. No. 2
TRAVIS COUNTY, TEXAS

WASTEWATER TREATMENT PLANT
EXPANSION TO 1.5 MGD

DEWATERING PRESS FEED PUMPS P&ID

QUIDDITY
Texas Board of Professional Engineers and Land Surveyors Reg. No. F-23290
912 South Capital of Texas Hwy, Suite 300 • Austin, TX 78746 • 512.441.9493

SCALE:	NONE	DGN. BY:	ABM
DATE:	FEBRUARY 2026	DWN. BY:	SSOMERS
JOB NO.	0A651-0021-02	DWG. NO.	
SUBMITTED:		SURV. BY:	
		F.B. NO.	

For Electrical and Instrumentation Only:

STATE OF TEXAS
JOEL J. JOHN
115776
LICENSED PROFESSIONAL ENGINEER
03/10/2026

STATE OF TEXAS
JORDAN ZYLBERBERG
142350
LICENSED PROFESSIONAL ENGINEER
3/10/26

14A-I-1
SHEET NO. 225 OF 230

C:\Users\cgular\AppData\Local\Autodesk\AutoCAD Plant 3D\CollaborationCache\0A651-0011-00 P&ID's\PID DWG\POLYMER SYSTEM P&ID.dwg, Feb 19, 2026 - 5:44am, cgular

0 1 2 3 4 5 ORIGINAL SCALE IN INCHES FOR REDUCED PLANS

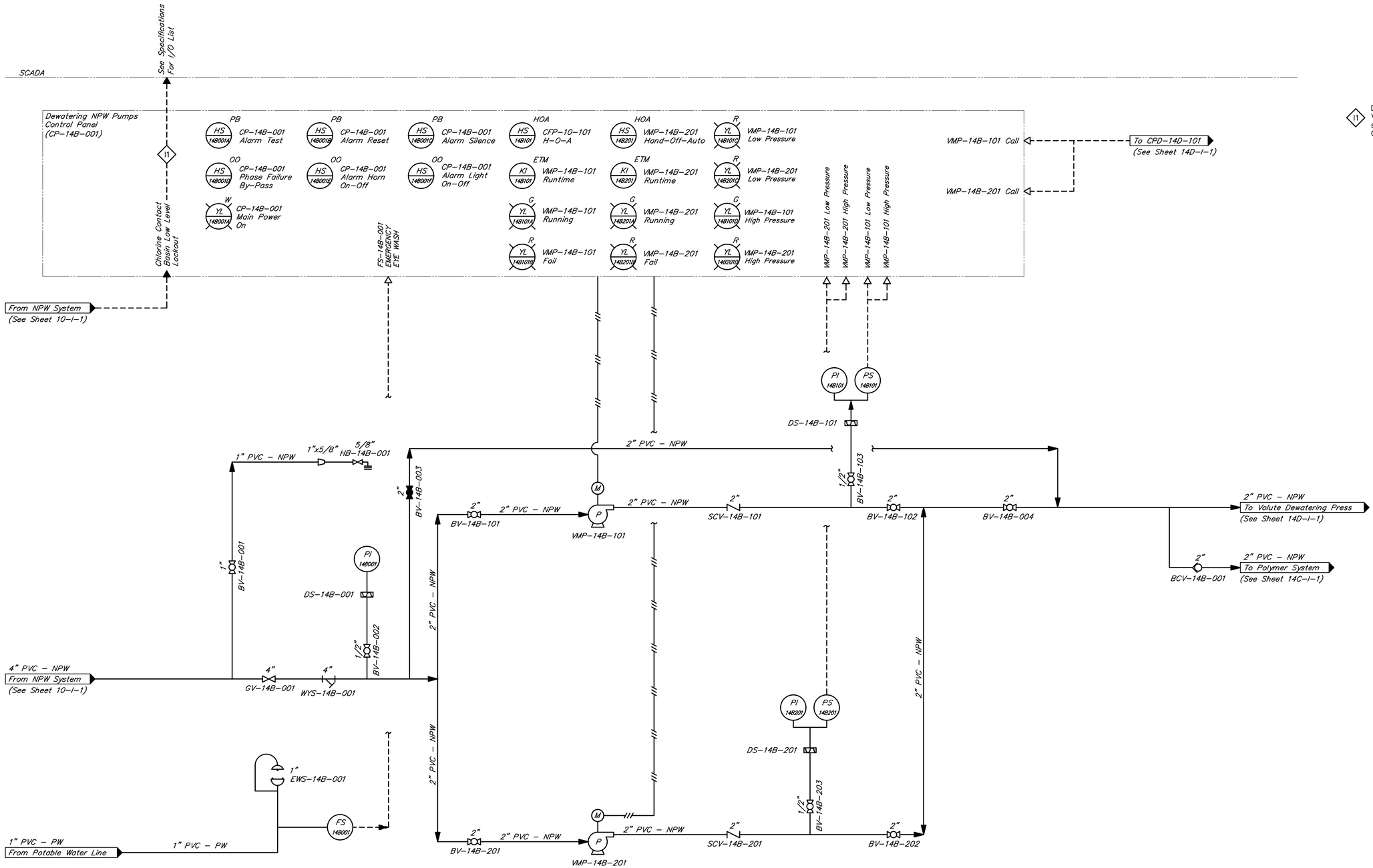

INTERLOCKS:

I1 Dewatering NPW Booster Pumps, VMP-14B-101 & VMP-14B-201, shall shut off on a low level from the Chlorine Contact Basin.

NO.	DATE	REVISIONS	APP.

WILBARGER CREEK M.U.D. No. 2
TRAVIS COUNTY, TEXAS

WASTEWATER TREATMENT PLANT
EXPANSION TO 1.5 MGD

DEWATERING NPW BOOSTER PUMPS P&ID

QUIDDITY
Texas Board of Professional Engineers and Land Surveyors Reg. No. F-23290
912 South Capital of Texas Hwy, Suite 300 • Austin, TX 78746 • 512.441.9493

SCALE:	NONE	DGN. BY:	ABM
DATE:	FEBRUARY 2026	DWN. BY:	SSOMERS
JOB NO.	0A651-0021-02	DWG. NO.	
SUBMITTED:		SURV. BY:	
		F.B. NO.	

For Electrical and Instrumentation Only:

STATE OF TEXAS — JOEL J. JOHN — 115776 — LICENSED PROFESSIONAL ENGINEER — 03/10/2026

STATE OF TEXAS — JORDAN ZYLBERBERG — 142350 — LICENSED PROFESSIONAL ENGINEER — 3/10/26

14B-I-1
SHEET NO. 226 OF 230

C:\Users\cgular\AppData\Local\Autodesk\AutoCAD Plant 3D\CollaborationCache\0A651-0011-00 P&ID's\PID DWG\POLYMER SYSTEM P&ID.dwg, Feb 19, 2026 - 3:28pm, cgular

0 1 2 3 4 5 ORIGINAL SCALE IN INCHES FOR REDUCED PLANS

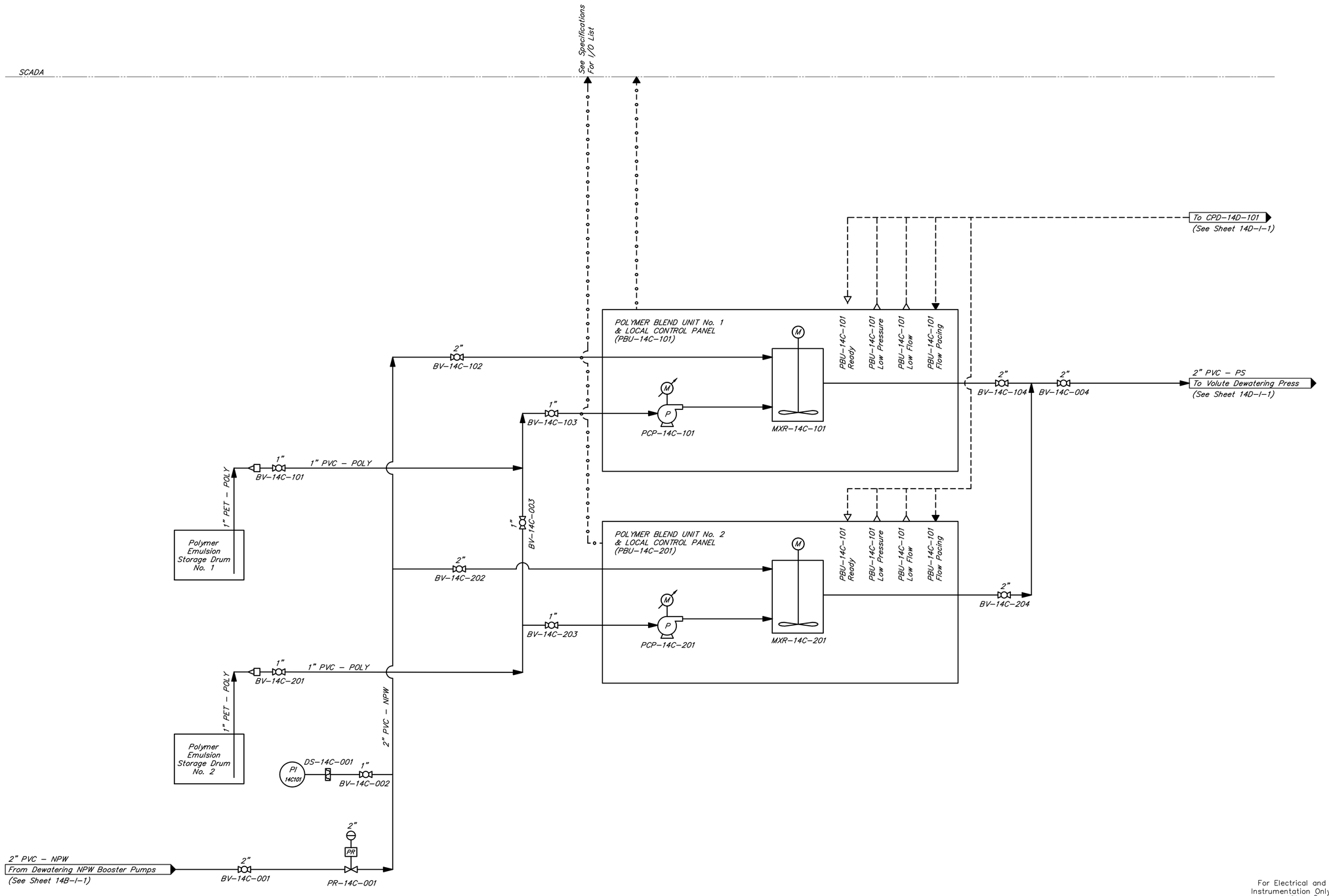

NO.	DATE	REVISIONS	APP.

WILBARGER CREEK M.U.D. No. 2
TRAVIS COUNTY, TEXAS

WASTEWATER TREATMENT PLANT EXPANSION TO 1.5 MGD

POLYMER SYSTEM P&ID

QUIDDITY
Texas Board of Professional Engineers and Land Surveyors Reg. No. F-23290
912 South Capital of Texas Hwy, Suite 300 • Austin, TX 78746 • 512.441.9493

SCALE:	NONE	DGN. BY:	ABM
DATE:	FEBRUARY 2026	DWN. BY:	SSOMERS
JOB NO.	0A651-0021-02	DWG. NO.	
SUBMITTED:		SURV. BY:	
		F.B. NO.	

For Electrical and Instrumentation Only:

STATE OF TEXAS — JOEL J. JOHN — 115778 — LICENSED PROFESSIONAL ENGINEER
03/10/2026

STATE OF TEXAS — JORDAN ZYLBERBERG — 142350 — LICENSED PROFESSIONAL ENGINEER
3/10/26

14C-I-1
SHEET NO. 227 OF 230

C:\Users\cgular\AppData\Local\Autodesk\AutoCAD Plant 3D\CollaborationCache\0A651-0011-00 P&ID's\PID DWG\POLYMER SYSTEM P&ID.dwg, Feb 19, 2026 - 3:33pm, cgular

ORIGINAL SCALE IN INCHES FOR REDUCED PLANS

SCADA

See Specifications For I/O List

Volute Press Control Panel (CP-14D-101)

VSH-14A-101 High Vacuum
VSH-14A-201 High Vacuum
DDP-14A-101 Dewatering Press Feed Pump No. 1
DDP-14A-101 Dewatering Press Feed Pump No. 2
PSL-14A-101 Low Pressure
PSH-14A-101 High Pressure
PSL-14A-201 Low Pressure
PSH-14A-201 High Pressure
LSL-13-001 Sludge Holding Tank Low
LSL-13-002 Sludge Holding Tank Low
VMP-14B-101 Call
VMP-14B-201 Call
PBU-14C-101 Call
PBU-14C-101 Low Pressure
PBU-14C-101 Low Flow
PBU-14C-101 Flow Pacing
PBU-14C-201 Call
PBU-14C-201 Low Pressure
PBU-14C-201 Low Flow
PBU-14C-201 Flow Pacing

HMI TOUCH SCREEN

FIT-14D-101 Press Feed Pump Flow
LSH-14D-101 High Level Lockout
FCT-14D-101 Level
FCT-14D-102 Level

W YL 140100 Power On
R YL 140102A UPS Power On
G YL 140100B Equipment Running
H-O-A HS 140100 Hand-Off-Auto
R YL 140101 Alarm Beacon

MP 140100 Emergency Stop

SV-14D-101 Open/Close
SV-14D-102 Open/Close
SV-14D-103 Open/Close
SV-14D-104 Open/Close
SV-14D-105 Open/Close
SV-14D-106 Open/Close
VP-14D-101 Emergency Stop
ES 140101

SCC-14D-101 Emergency Stop
ZSC-14D-101 Loss of Rotation
SCC-14D-102 Emergency Stop
ZSC-14D-102 Loss of Rotation

INTERLOCKS:

I1 Press Feed Pump Nos. 1 & 2 (DDP-14A-101 and DDP-14A-201) shall shut off wjem level switch is activated.

I2 Press Feed Pump COntrol Panel shall receive "Volute Press Tank High Level" signal from CP-14D-001 and lockout the pumps.

VP-14D-101

FCT-14D-101
FCT-14D-102
FCT-14D-103

LT 140102
LT 140103

LSH 140101

From Dewatering Press Feed System
(See Sheet 14A-I-1)

From Sludge Holding Tank
(See Sheet 13-I-1)

From CP-14B-001
(See Sheet 14B-I-1)

From Polymer System
(See Sheet 14C-I-1)

From Dewatering Press Feed System
(See Sheet 14A-I-1)

6" DI - WAS
From Dewatering Press Feed Pumps
(See Sheet 14A-I-1)

2" PVC - PS
From Polymer System
(See Sheet 14C-I-1)

SV-14D-101A
SV-14D-101B
SV-14D-101C
BV-14D-101A
BV-14D-101B
BV-14D-101C

8" DI - FTR

SWC-14D-101 2"x1 1/2"
2"
6"x4"
PV-14D-001 12"

SCC-14D-101 5HP
Screw Conveyor
ZSL 140101
ES 140101
ZSL 140102
ES 140102

2" PVC - DR
BV-14D-108
SCC-14D-102
1"
BV-14D-107

6" DI - DR

12" PVC - DR
To Drain Line

MP START UP DN E-STOP ES

Roll-Off Dumpster

WCH-14D-101

1" BV-14D-101D SV-14D-101E
1" BV-14D-101E SV-14D-101E
1" BV-14D-101F SV-14D-101F

2" PVC - NPW
From Dewatering NPW Booster Pumps
(See Sheet 14B-I-1)

2"x1" 2" PVC - NPW

For Electrical and Instrumentation Only:

STATE OF TEXAS
JOEL J. JOHN
115776
LICENSED PROFESSIONAL ENGINEER
03/10/2026

NO.	DATE	REVISIONS	APP.

WILBARGER CREEK M.U.D. No. 2
TRAVIS COUNTY, TEXAS

WASTEWATER TREATMENT PLANT EXPANSION TO 1.5 MGD

MULTI-DISC DEWATERING

QUIDDITY
Texas Board of Professional Engineers and Land Surveyors Reg. No. F-23290
912 South Capital of Texas Hwy, Suite 300 • Austin, TX 78746 • 512.441.9493

SCALE:	NONE	DGN. BY:	ABM
DATE:	MARCH 2026	DWN. BY:	SSOMERS
JOB NO.	0A651-0021-02	DWG. NO.	
SUBMITTED:		SURV. BY:	
		F.B. NO.	

STATE OF TEXAS
JORDAN ZYLBERBERG
142350
LICENSED PROFESSIONAL ENGINEER
3/10/26

14D-I-1
SHEET NO. 228 OF 230

C:\Users\inoldin\AppData\Local\Autodesk\AutoCAD Plant 3D\CollaborationCache\0A651-0011-00 P&ID's\PID DWG\DWTR.dwg, Mar 10, 2026 - 10:57am, inoldin

0 1 2 3 4 5 ORIGINAL SCALE IN INCHES FOR REDUCED PLANS

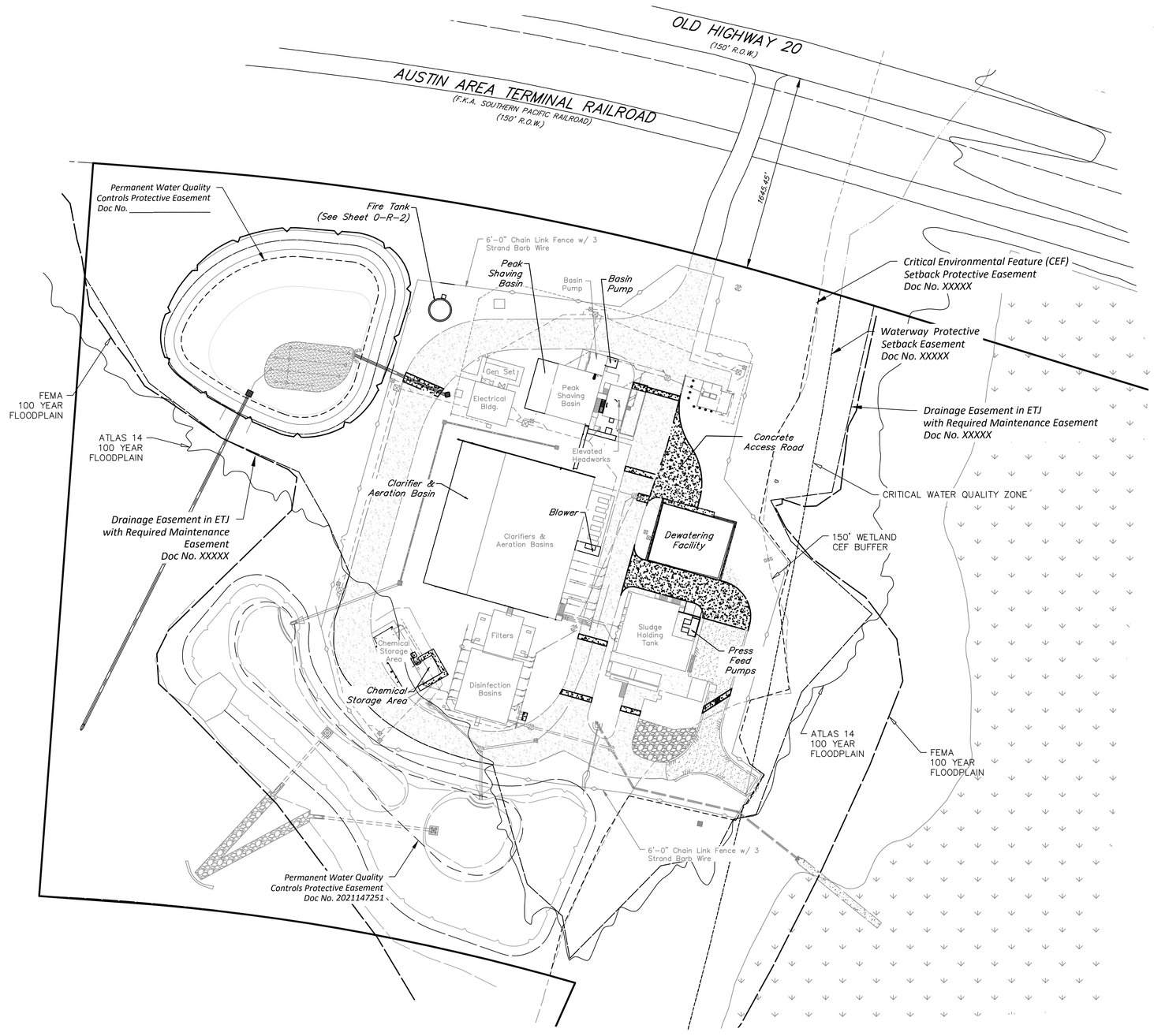

LEGEND:

EXISTING	PROPOSED	
		CHAIN LINK FENCE
		ASPHALT PAVEMENT
		CONCRETE PAVEMENT
		TOP OF BANK
		CRITICAL WATER QUALITY ZONE
		150' WETLAND CEF BUFFER
		PLAT BOUNDARY
		EASEMENT

0 10 20 40 80 120
SCALE: 1" = 40'

NO.	DATE	REVISIONS	APP.

WILBARGER CREEK M.U.D. No. 2
TRAVIS COUNTY, TEXAS

WASTEWATER TREATMENT PLANT
EXPANSION TO 1.5 MGD

OVERALL ROAD SITE PLAN

QUIDDITY
Texas Board of Professional Engineers and Land Surveyors Reg. No. F-23290
912 South Capital of Texas Hwy, Suite 300 • Austin, TX 78746 • 512.441.9493

SCALE:	1" = 40'	DGN. BY:	HLC
DATE:	SEPTEMBER 2026	DWN. BY:	HLC
JOB NO.	0A651-0021-02	DWG. NO.	
SUBMITTED:		SURV. BY:	
		F.B. NO.	

STATE OF TEXAS
RYAN W. LeMAIRE
143835
LICENSED PROFESSIONAL ENGINEER
09/24/2026

0-R-1
SHEET NO. 229 OF 230

C:\Users\hc\DC\ACCDocs\Quiddity - Water-\0A651-0021-02 _ WILBARGER WWTP EXP. 1.5 MGD\Project Files\PLANS\SITE\SITE 10-29.dwg, Sep 23, 2026 - 6:23pm, hc

0 1 2 3 4 5 ORIGINAL SCALE IN INCHES FOR REDUCED PLANS

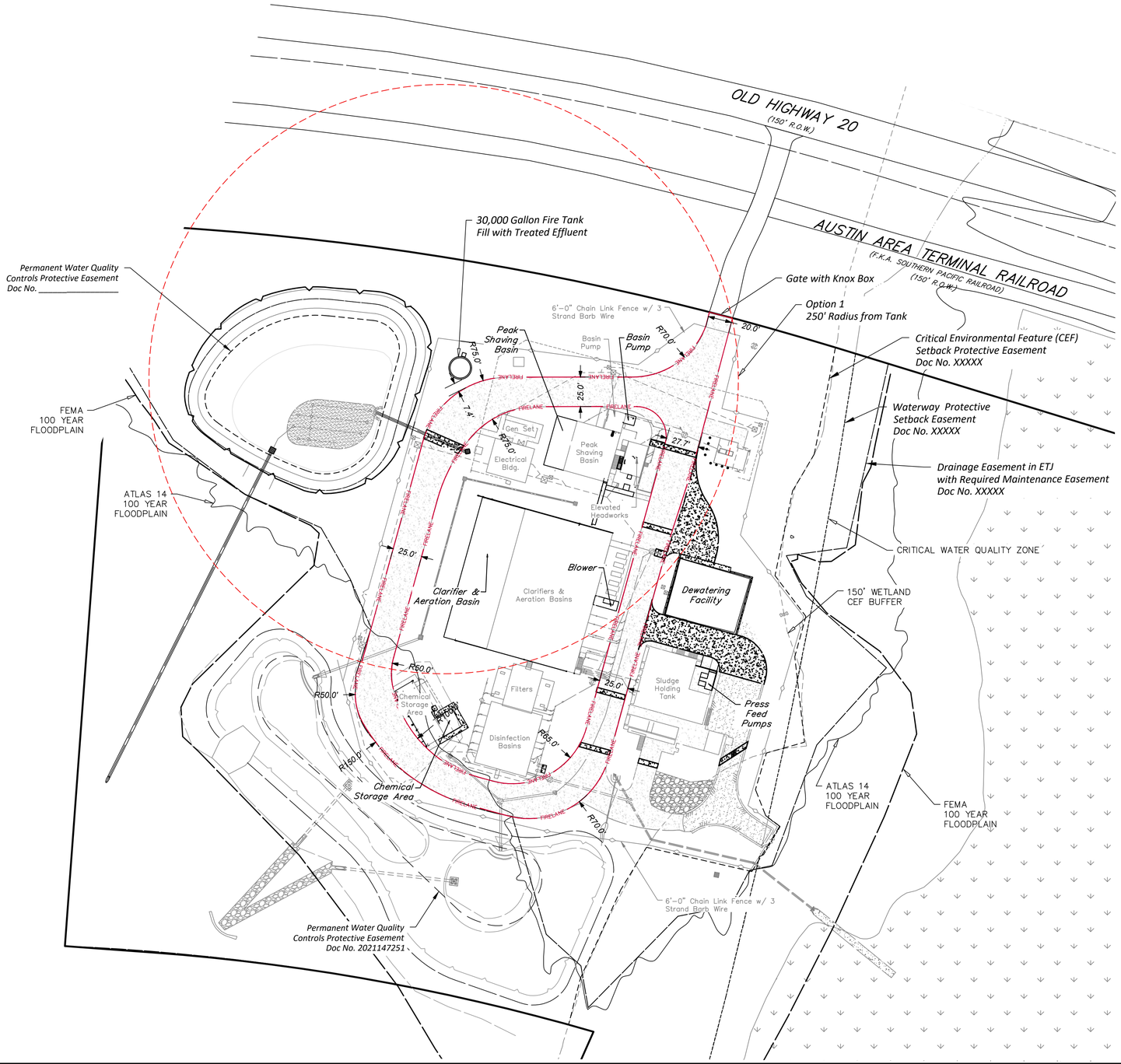

LEGEND:

EXISTING	PROPOSED	
		CHAIN LINK FENCE
		ASPHALT PAVEMENT
		CONCRETE PAVEMENT
		TOP OF BANK
		CRITICAL WATER QUALITY ZONE
		150' WETLAND CEF BUFFER
		PLAT BOUNDARY
		EASEMENT
FIRELANE	FIRELANE	FIRE LANE

0 10 20 40 80 120
SCALE: 1" = 40'

FIRE LANE MARKING DETAILS:

FIRE LANE SHALL BE RED WITH WHITE STENCILING READING "FIRE LANE / TOW AWAY ZONE" IN LETTERING AT LEAST 3 INCHES HIGH WITH A STROKE OF AT LEAST 0.5 INCH.

THE STENCILING SHALL BE AT INTERVALS OF 35 FEET OR LESS.

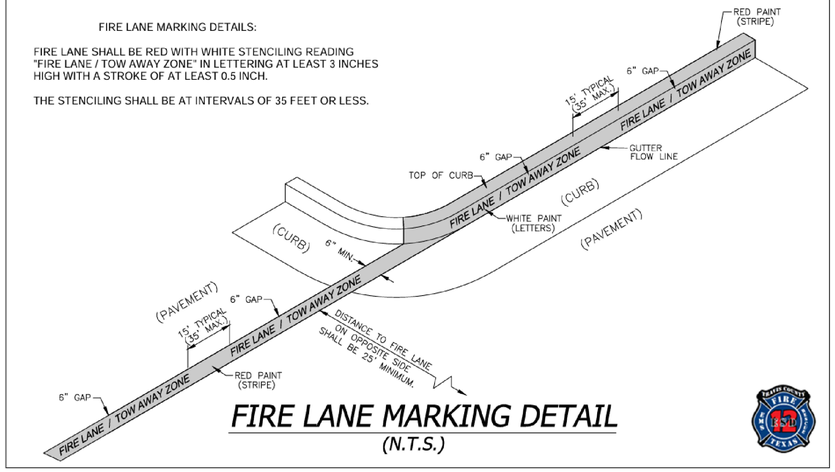

FIRE LANE MARKING DETAIL
(N.T.S.)

NO.	DATE	REVISIONS	APP.

WILBARGER CREEK M.U.D. No. 2
TRAVIS COUNTY, TEXAS

WASTEWATER TREATMENT PLANT
EXPANSION TO 1.5 MGD

FIRE PROTECTION PLAN

QUIDDITY
Texas Board of Professional Engineers and Land Surveyors Reg. No. F-23290
912 South Capital of Texas Hwy, Suite 300 • Austin, TX 78746 • 512.441.9493

SCALE:	1" = 40'	DGN. BY:	HLC
DATE:	SEPTEMBER 2026	DWN. BY:	HLC
JOB NO.	0A651-0021-02	DWG. NO.	
SUBMITTED:		SURV. BY:	
		F.B. NO.	

STATE OF TEXAS
RYAN W. LeMARRE
143835
LICENSED PROFESSIONAL ENGINEER
09/24/2026

0-R-2
SHEET NO. 230 OF 230

C:\Users\hc\DC\ACCDocs\Quiddity - Water-\0A651-0021-02 _ WILBARGER WWTP EXP. 1.5 MGD\Project Files\PLANS\SITE\SITE 10-29.dwg, Sep 23, 2026 - 6:24pm, hc